June 26, 2023

Melinda Owens
New Mexico Environment Department
Air Quality Bureau
525 Camino de los Marquez, Suite 1
Santa Fe, New Mexico, 87505

RE: Initial Title V Operating Permit Application
Zia Hills Central Facility – NSR-7746
ConocoPhillips Company

Dear Ms. Owens:

On behalf of ConocoPhillips Company, PEI Consulting Group (PEI) is submitting the attached initial Title V permit application for the Zia Hills Central Facility. The electronic files will be provided via email or Accellion. Please contact me at 865-850-2007 or etullos@pei-tx.com should you have any questions.

Sincerely,

Evan Tullos
Vice President

cc: Region 6 Air Permits
R6AirPermits@epa.gov

Initial Title V Operating Permit Application

ConocoPhillips Company

NSR 7746-M9

Zia Hills Central Facility

Lea County, New Mexico

N. Jarrett Airhart

Senior Environmental Engineer

Prepared by:

PEI Consulting Group, Inc.

Table of Contents

Section 1	**Facility Information**
Section 2	**Application Tables**
Section 3	**Application Summary**
Section 4	**Process Flow Sheet**
Section 5	**Plot Plan**
Section 6	**All Calculations**
Section 7	**Information to Determine Emissions**
Section 8	**Map(s)**
Section 9	**Proof of Public Notice**
Section 10	**Written Description of Operations**
Section 11	**Source Determination**
Section 12	**PSD Determination**
Section 13	**Determination of State & Federal Regulations**
Section 14	**Operational Plan to Mitigate Emissions**
Section 15	**Alternative Operating Scenarios**
Section 16	**Air Dispersion Modeling**
Section 17	**Compliance Test History**
Section 18	**Addendum for Streamline Applications**
Section 19	**Requirements for Title V Program**
Section 20	**Other Relevant Information**
Section 21	**Addendum for Landfill Applications**
Section 22	**Certification**

Section 1

Site Information

Mail Application To:		**For Department use only:**
New Mexico Environment Department Air Quality Bureau Permits Section 525 Camino de los Marquez, Suite 1 Santa Fe, New Mexico, 87505 Phone: (505) 476-4300 Fax: (505) 476-4375 www.env.nm.gov/aqb		AIRS No.:

Universal Air Quality Permit Application

Use this application for NOI, NSR, or Title V sources.

Use this application for: the initial application, modifications, technical revisions, and renewals. For technical revisions, complete Sections, 1-A, 1-B, 2-E, 3, 9 and any other sections that are relevant to the requested action; coordination with the Air Quality Bureau permit staff prior to submittal is encouraged to clarify submittal requirements and to determine if more or less than these sections of the application are needed. Use this application for streamline permits as well. See Section 1-I for submittal instructions.

This application is submitted as (check all that apply)**:** ☐ Request for a No Permit Required Determination (no fee)
☐ **Updating** an application currently under NMED review. Include this page and all pages that are being updated (no fee required).
Construction Status: ☐ Not Constructed ☑ Existing Permitted (or NOI) Facility ☐ Existing Non-permitted (or NOI) Facility
Minor Source: ☐ a NOI 20.2.73 NMAC ☐ 20.2.72 NMAC application or revision ☐ 20.2.72.300 NMAC Streamline application
Title V Source: ☑ Title V (new) ☐ Title V renewal ☐ TV minor mod. ☐ TV significant mod. TV Acid Rain: ☐ New ☐ Renewal
PSD Major Source: ☐ PSD major source (new) ☐ minor modification to a PSD source ☐ a PSD major modification

Acknowledgements:
☑ I acknowledge that a pre-application meeting is available to me upon request. ☑ Title V Operating, Title IV Acid Rain, and NPR applications have no fees.
☐ $500 NSR application Filing Fee enclosed OR ☐ The full permit fee associated with 10 fee points (required w/ streamline applications).
☐ Check No.: in the amount of $
☑ I acknowledge the required submittal format for the hard copy application is printed double sided 'head-to-toe', 2-hole punched (except the Sect. 2 landscape tables is printed 'head-to-head'), numbered tab separators. Incl. a copy of the check on a separate page.
☐ I acknowledge there is an annual fee for permits in addition to the permit review fee: www.env.nm.gov/air-quality/permit-fees-2/.
☐ This facility qualifies for the small business fee reduction per 20.2.75.11.C. NMAC. The full $500.00 filing fee is included with this application and I understand the fee reduction will be calculated in the balance due invoice. The Small Business Certification Form has been previously submitted or is included with this application. (Small Business Environmental Assistance Program Information: www.env.nm.gov/air-quality/small-biz-eap-2/.)

Citation: Please provide the **low level citation** under which this application is being submitted: **20.2.70.300.B.1 NMAC**
(e.g. application for a new minor source would be 20.2.72.200.A NMAC, one example for a Technical Permit Revision is 20.2.72.219.B.1.b NMAC, a Title V acid rain application would be: 20.2.70.200.C NMAC)

Section 1 – Facility Information

Section 1-A: Company Information		AI # if known (see 1st 3 to 5 #s of permit IDEA ID No.): 38334	Updating Permit/NOI #: 7746
1	Facility Name: Zia Hills Central Facility	Plant primary SIC Code (4 digits): 1311 Plant NAIC code (6 digits): 211120	
a	Facility Street Address (If no facility street address, provide directions from a prominent landmark):		
2	Plant Operator Company Name: ConocoPhillips Company	Phone/Fax: (832) 486-2000	
a	Plant Operator Address: 935 N. Eldridge Parkway; Houston, TX 77079		
b	Plant Operator's New Mexico Corporate ID or Tax ID: 73-0400345		

3	Plant Owner(s) name(s): ConocoPhillips Company	Phone/Fax: (832) 486-2000
a	Plant Owner(s) Mailing Address(s): 935 N. Eldridge Parkway; Houston, TX 77079	
4	Bill To (Company): ConocoPhillips Company	Phone/Fax: (832) 486-2000
a	Mailing Address: 935 N. Eldridge Parkway; Houston, TX 77079	E-mail: jarrett.airhart@conocophillips.com
5	☐ Preparer: ☑ Consultant: Evan Tullos - PEI	Phone/Fax: (865) 850-2007
a	Mailing Address: 1414 W. Sam Houston Pkwy N, Suite 160; Houston, TX 77043	E-mail: etullos@pei-tx.com
6	Plant Operator Contact: Jarrett Airhart	Phone/Fax: (432) 701-5996
a	Address: 2208 W. Main St.; Artesia, NM 88210	E-mail: jarrett.airhart@conocophillips.com
7	Air Permit Contact: Jennifer Knowlton	Title: Manager Permian Emissions New Mexico
a	E-mail: Jennifer.knowlton@conocophillips.com	Phone/Fax: (432) 221-0849
b	Mailing Address: 600 W Illinois Ave Midland Tx 79701	
c	The designated Air permit Contact will receive all official correspondence (i.e. letters, permits) from the Air Quality Bureau.	

Section 1-B: Current Facility Status

1.a	Has this facility already been constructed? ☑ Yes ☐ No	1.b If yes to question 1.a, is it currently operating in New Mexico? ☑ Yes ☐ No
2	If yes to question 1.a, was the existing facility subject to a Notice of Intent (NOI) (20.2.73 NMAC) before submittal of this application? ☐ Yes ☑ No	If yes to question 1.a, was the existing facility subject to a construction permit (20.2.72 NMAC) before submittal of this application? ☑ Yes ☐ No
3	Is the facility currently shut down? ☐ Yes ☑ No	If yes, give month and year of shut down (MM/YY):
4	Was this facility constructed before 8/31/1972 and continuously operated since 1972? ☐ Yes ☑ No	
5	If Yes to question 3, has this facility been modified (see 20.2.72.7.P NMAC) or the capacity increased since 8/31/1972? ☐Yes ☐No ☐N/A	
6	Does this facility have a Title V operating permit (20.2.70 NMAC)? ☐ Yes ☑ No	If yes, the permit No. is: P-
7	Has this facility been issued a No Permit Required (NPR)? ☐ Yes ☑ No	If yes, the NPR No. is:
8	Has this facility been issued a Notice of Intent (NOI)? ☐ Yes ☑No	If yes, the NOI No. is:
9	Does this facility have a construction permit (20.2.72/20.2.74 NMAC)? ☑ Yes ☐ No	If yes, the permit No. is: 7746
10	Is this facility registered under a General permit (GCP-1, GCP-2, etc.)? ☐ Yes ☑No	If yes, the register No. is:

Section 1-C: Facility Input Capacity & Production Rate

1	What is the facility's maximum input capacity, specify units (reference here and list capacities in Section 20, if more room is required)			
a	Current	Hourly: 563 BBL/3.3 MMSCF	Daily: 13500 BBL /80 MMSCF	Annually: 4.93 MMBBL/29.2 BSCF
b	Proposed	Hourly: 771 BBL/5 MMSCF	Daily: 18503 BBL /120 MMSCF	Annually: 6.57 MMBBL/43.8 BSCF
2	What is the facility's maximum production rate, specify units (reference here and list capacities in Section 20, if more room is required)			
a	Current	Hourly: 563 BBL/3.3 MMSCF	Daily: 13500 BBL /80 MMSCF	Annually: 4.93 MMBBL/29.2 BSCF
b	Proposed	Hourly: 771 BBL/5 MMSCF	Daily: 18503 BBL /120 MMSCF	Annually: 6.57 MMBBL/43.8 BSCF

Section 1-D: Facility Location Information

1	Section: 19	Range: 32E	Township: 26S	County: Lea	Elevation (ft): 3173
2	UTM Zone: ☐ 12 or ☑ 13			Datum: ☐ NAD 27 ☐ NAD 83 ☑ WGS 84	
a	UTM E (in meters, to nearest 10 meters): 621600			UTM N (in meters, to nearest 10 meters): 3543600	
b	**AND** Latitude (deg., min., sec.): 32º 01' 19"			Longitude (deg., min., sec.): -103º 42' 45"	
3	Name and zip code of nearest New Mexico town: Malaga - 88263				
4	Detailed Driving Instructions from nearest NM town (attach a road map if necessary): From Malaga, drive S on Hwy 285 for 30.3 mi. to L on RM 652E (Farm to Mkt.). Drive 17 mi. to continue onto J-1/Orla Rd. Drive 2.0 mi. to L on Battle Axe Rd. Drive 0.8 mi. to L into site area.				
5	The facility is 24.9 (distance) miles SE (direction) of Malaga (nearest town).				
6	Status of land at facility (check one): ☐ Private ☐ Indian/Pueblo ☑ Federal BLM ☐ Federal Forest Service ☐ Other (specify)				
7	List all municipalities, Indian tribes, and counties within a ten (10) mile radius (20.2.72.203.B.2 NMAC) of the property on which the facility is proposed to be constructed or operated: Eddy, Lea				
8	**20.2.72** NMAC applications **only**: Will the property on which the facility is proposed to be constructed or operated be closer than 50 km (31 miles) to other states, Bernalillo County, or a Class I area (see www.env.nm.gov/aqb/modeling/class1areas.html)? ☑ Yes ☐ No (20.2.72.206.A.7 NMAC) If yes, list all with corresponding distances in kilometers: TX - 2.4				
9	Name nearest Class I area: Carlsbad Caverns				
10	Shortest distance (in km) from facility boundary to the boundary of the nearest Class I area (to the nearest 10 meters): 64.61				
11	Distance (meters) from the perimeter of the Area of Operations (AO is defined as the plant site inclusive of all disturbed lands, including mining overburden removal areas) to nearest residence, school or occupied structure: > 5				
12	Method(s) used to delineate the Restricted Area: Fence "**Restricted Area**" is an area to which public entry is effectively precluded. Effective barriers include continuous fencing, continuous walls, or other continuous barriers approved by the Department, such as rugged physical terrain with steep grade that would require special equipment to traverse. If a large property is completely enclosed by fencing, a restricted area within the property may be identified with signage only. Public roads cannot be part of a Restricted Area.				
13	Does the owner/operator intend to operate this source as a portable stationary source as defined in 20.2.72.7.X NMAC? ☐ Yes ☑ No A portable stationary source is not a mobile source, such as an automobile, but a source that can be installed permanently at one location or that can be re-installed at various locations, such as a hot mix asphalt plant that is moved to different job sites.				
14	Will this facility operate in conjunction with other air regulated parties on the same property? ☒ No ☐ Yes If yes, what is the name and permit number (if known) of the other facility?				

Section 1-E: Proposed Operating Schedule (The 1-E.1 & 1-E.2 operating schedules may become conditions in the permit.)

1	Facility **maximum** operating ($\frac{hours}{day}$): 24	($\frac{days}{week}$): 7	($\frac{weeks}{year}$): 52	($\frac{hours}{year}$): 8760	
2	Facility's maximum daily operating schedule (if less than 24 $\frac{hours}{day}$)? Start:	☐AM ☐PM	End:	☐AM ☐PM	
3	Month and year of anticipated start of construction: Upon receipt of permit				
4	Month and year of anticipated construction completion: 3-5 months following receipt of permit				
5	Month and year of anticipated startup of new or modified facility: 3-5 months following receipt of permit				
6	Will this facility operate at this site for more than one year? ☑ Yes ☐ No				

Section 1-F: Other Facility Information

1	Are there any current Notice of Violations (NOV), compliance orders, or any other compliance or enforcement issues related to this facility? ☐ Yes ☑ No If yes, specify:

a	If yes, NOV date or description of issue:		NOV Tracking No:
b	Is this application in response to any issue listed in 1-F, 1 or 1a above? ☐ Yes ☐ No If Yes, provide the 1c & 1d info below:		
c	Document Title:	Date:	Requirement # (or page # and paragraph #):
d	Provide the required text to be inserted in this permit:		
2	Is air quality dispersion modeling or modeling waiver being submitted with this application? ☐ Yes ☑ No		
3	Does this facility require an "Air Toxics" permit under 20.2.72.400 NMAC & 20.2.72.502, Tables A and/or B? ☐ Yes ☑ No		
4	Will this facility be a source of federal Hazardous Air Pollutants (HAP)? ☑ Yes ☐ No		
a	If Yes, what type of source? ☐ **Major** (☐ ≥10 tpy of any single HAP **OR** ☐ ≥25 tpy of any combination of HAPS) **OR** ☑ **Minor** (☑ <10 tpy of any single HAP **AND** ☑ <25 tpy of any combination of HAPS)		
5	Is any unit exempt under 20.2.72.202.B.3 NMAC? ☐ Yes ☑ No		
a	If yes, include the name of company providing commercial electric power to the facility: _____ Commercial power is purchased from a commercial utility company, which specifically does not include power generated on site for the sole purpose of the user.		

Section 1-G: Streamline Application **(This section applies to 20.2.72.300 NMAC Streamline applications only)**

1	☐ I have filled out Section 18, "Addendum for Streamline Applications." ☑ N/A (This is not a Streamline application.)

Section 1-H: Current Title V Information - Required for all applications from TV Sources

(Title V-source required information for all applications submitted pursuant to 20.2.72 NMAC (Minor Construction Permits), or 20.2.74/20.2.79 NMAC (Major PSD/NNSR applications), and/or 20.2.70 NMAC (Title V))

1	Responsible Official (R.O.) (20.2.70.300.D.2 NMAC): Hal Mead	Phone: (346) 773-0875
a	R.O. Title: Asset Manager DB East	R.O. e-mail: hal.w.mead@conocophillips.com
b	R. O. Address: 600 W Illinois; Midland, TX 79701	
2	Alternate Responsible Official (20.2.70.300.D.2 NMAC): Carlos Blanco	Phone: (432) 238-3749
a	A. R.O. Title: Manager Operations	A. R.O. e-mail: carlos.a.blanco@conocophillips.com
b	A. R. O. Address: 600 W Illinois; Midland, TX 79701	
3	Company's Corporate or Partnership Relationship to any other Air Quality Permittee (List the names of any companies that have operating (20.2.70 NMAC) permits and with whom the applicant for this permit has a corporate or partnership relationship): ConocoPhillips Company	
4	Name of Parent Company ("Parent Company" means the primary name of the organization that owns the company to be permitted wholly or in part.): ConocoPhillips Company	
a	Address of Parent Company: 935 N. Eldridge Parkway; Houston, TX 77079	
5	Names of Subsidiary Companies ("Subsidiary Companies" means organizations, branches, divisions or subsidiaries, which are owned, wholly or in part, by the company to be permitted.):	
6	Telephone numbers & names of the owners' agents and site contacts familiar with plant operations: Jarrett Airhart - (432) 701-5996	
7	Affected Programs to include Other States, local air pollution control programs (i.e. Bernalillo) and Indian tribes: Will the property on which the facility is proposed to be constructed or operated be closer than 80 km (50 miles) from other states, local pollution control programs, and Indian tribes and pueblos (20.2.70.402.A.2 and 20.2.70.7.B)? If yes, state which ones and provide the distances in kilometers:	

Section 1-I – Submittal Requirements

Each 20.2.73 NMAC (**NOI**), a 20.2.70 NMAC (**Title V**), a 20.2.72 NMAC (**NSR** minor source), or 20.2.74 NMAC (**PSD**) application package shall consist of the following:

Hard Copy Submittal Requirements:

1) One hard copy **original signed and notarized application package printed double sided 'head-to-toe' 2-hole punched** as we bind the document on top, not on the side; except Section 2 (landscape tables), which should be head-to-head. Please use **numbered tab separators** in the hard copy submittal(s) as this facilitates the review process. For NOI submittals only, hard copies of UA1, Tables 2A, 2D & 2F, Section 3 and the signed Certification Page are required. Please include a copy of the check on a separate page.

2) If the application is for a minor NSR, PSD, NNSR, or Title V application, include one working hard **copy** for Department use. This copy should be printed in book form, 3-hole punched, and **must be double sided**. Note that this is in addition to the head-to-to 2-hole punched copy required in 1) above. Minor NSR Technical Permit revisions (20.2.72.219.B NMAC) only need to fill out Sections 1-A, 1-B, 3, and should fill out those portions of other Section(s) relevant to the technical permit revision. TV Minor Modifications need only fill out Sections 1-A, 1-B, 1-H, 3, and those portions of other Section(s) relevant to the minor modification. NMED may require additional portions of the application to be submitted, as needed.

3) The entire NOI or Permit application package, including the full modeling study, should be submitted electronically. Electronic files for applications for NOIs, any type of General Construction Permit (GCP), or technical revisions to NSRs must be submitted with compact disk (CD) or digital versatile disc (DVD). For these permit application submittals, **two** CD copies are required (in sleeves, not crystal cases, please), with additional CD copies as specified below. NOI applications require only a single CD submittal. Electronic files for other New Source Review (construction) permits/permit modifications or Title V permits/permit modifications can be submitted on CD/DVD or sent through AQB's secure file transfer service.

Electronic files sent by (check one):

☐ CD/DVD attached to paper application

☑ secure electronic transfer. Air Permit Contact Name Evan Tullos

Email etullos@pei-tx.com

Phone number (865) 850-2007

a. If the file transfer service is chosen by the applicant, after receipt of the application, the Bureau will email the applicant with instructions for submitting the electronic files through a secure file transfer service. Submission of the electronic files through the file transfer service needs to be completed within 3 business days after the invitation is received, so the applicant should ensure that the files are ready when sending the hard copy of the application. The applicant will not need a password to complete the transfer. **Do not use the file transfer service for NOIs, any type of GCP, or technical revisions to NSR permits.**

4) Optionally, the applicant may submit the files with the application on compact disk (CD) or digital versatile disc (DVD) following the instructions above and the instructions in 5 for applications subject to PSD review.

5) If **air dispersion modeling** is required by the application type, include the **NMED Modeling Waiver** and/or electronic air dispersion modeling report, input, and output files. The dispersion modeling ***summary report only*** should be submitted as hard copy(ies) unless otherwise indicated by the Bureau.

6) If the applicant submits the electronic files on CD and the application is subject to PSD review under 20.2.74 NMAC (PSD) or NNSR under 20.2.79 NMC include,
   a. one additional CD copy for US EPA,
   b. one additional CD copy for each federal land manager affected (NPS, USFS, FWS, USDI) and,
   c. one additional CD copy for each affected regulatory agency other than the Air Quality Bureau.

   If the application is submitted electronically through the secure file transfer service, these extra CDs do not need to be submitted.

Electronic Submittal Requirements [in addition to the required hard copy(ies)]:

1) All required electronic documents shall be submitted as 2 separate CDs or submitted through the AQB secure file transfer service. Submit a single PDF document of the entire application as submitted and the individual documents comprising the application.

2) The documents should also be submitted in Microsoft Office compatible file format (Word, Excel, etc.) allowing us to access the text and formulas in the documents (copy & paste). Any documents that cannot be submitted in a Microsoft Office compatible

format shall be saved as a PDF file from within the electronic document that created the file. If you are unable to provide Microsoft office compatible electronic files or internally generated PDF files of files (items that were not created electronically: i.e. brochures, maps, graphics, etc,), submit these items in hard copy format. We must be able to review the formulas and inputs that calculated the emissions.

3) It is preferred that this application form be submitted as 4 electronic files (3 MSWord docs: Universal Application section 1 [UA1], Universal Application section 3-19 [UA3], and Universal Application 4, the modeling report [UA4]) and 1 Excel file of the tables (Universal Application section 2 [UA2]). Please include as many of the 3-19 Sections as practical in a single MS Word electronic document. Create separate electronic file(s) if a single file becomes too large or if portions must be saved in a file format other than MS Word.

4) The electronic file names shall be a maximum of 25 characters long (including spaces, if any). The format of the electronic Universal Application shall be in the format: "A-3423-FacilityName". The "A" distinguishes the file as an application submittal, as opposed to other documents the Department itself puts into the database. Thus, all electronic application submittals should begin with "A-". Modifications to existing facilities should use the core permit number (i.e. '3423') the Department assigned to the facility as the next 4 digits. Use 'XXXX' for new facility applications. The format of any separate electronic submittals (additional submittals such as non-Word attachments, re-submittals, application updates) and Section document shall be in the format: "A-3423-9-description", where "9" stands for the section # (in this case Section 9-Public Notice). Please refrain, as much as possible, from submitting any scanned documents as this file format is extremely large, which uses up too much storage capacity in our database. Please take the time to fill out the header information throughout all submittals as this will identify any loose pages, including the Application Date (date submitted) & Revision number (0 for original, 1, 2, etc.; which will help keep track of subsequent partial update(s) to the original submittal. Do not use special symbols (#, @, etc.) in file names. The footer information should not be modified by the applicant.

Table of Contents

Section 1: **General Facility Information**
Section 2: **Tables**
Section 3: **Application Summary**
Section 4: **Process Flow Sheet**
Section 5: **Plot Plan Drawn to Scale**
Section 6: **All Calculations**
Section 7: **Information Used to Determine Emissions**
Section 8: **Map(s)**
Section 9: **Proof of Public Notice**
Section 10: **Written Description of the Routine Operations of the Facility**
Section 11: **Source Determination**
Section 12: **PSD Applicability Determination for All Sources & Special Requirements for a PSD Application**
Section 13: **Discussion Demonstrating Compliance with Each Applicable State & Federal Regulation**
Section 14: **Operational Plan to Mitigate Emissions**
Section 15: **Alternative Operating Scenarios**
Section 16: **Air Dispersion Modeling**
Section 17: **Compliance Test History**
Section 18: **Addendum for Streamline Applications (streamline applications only)**
Section 19: **Requirements for the Title V (20.2.70 NMAC) Program (Title V applications only)**
Section 20: **Other Relevant Information**
Section 21: **Addendum for Landfill Applications**
Section 22: **Certification Page**

Section 2

Application Tables

Table 2-A: Regulated Emission Sources

Unit and stack numbering must correspond throughout the application package. Equipment that qualifies for an exemption under 20.2.72.202.B NMAC should be included in Table 2-B **Note:** Equipment options **are not authorized.**

Unit Number[1]	Source Description	Make	Model #	Serial #	Manufacturer's Rated Capacity[3] (Specify Units)	Requested Permitted Capacity[3] (Specify Units)	Date of Manufacture[2] / Date of Construction/ Reconstruction[2]	Controlled by Unit # / Emissions vented to Stack #	Source Classification Code (SCC)	For Each Piece of Equipment, Check Onc	RICE Ignition Type (CI, SI, 4SLB, 2SLB)[4]	Replacing Unit No.
ENG1	4SLB RICE – Sales/Gas Lift	Caterpillar	3606A4	TBD	1875 HP	1875 HP	TBD / TBD	CAT1 / ENG1	20200254	☑ Existing (unchanged) ☐ To be Removed ☐ New/Additional ☐ Replacement Unit ☐ To Be Modified ☐ To be Replaced	4SLB	N/A
ENG2	4SLB RICE – Sales/Gas Lift	Caterpillar	3606A4	JFE01170	1875 HP	1875 HP	10/1/2018 / 2018	CAT2 / ENG2	20200254	☑ Existing (unchanged) ☐ To be Removed ☐ New/Additional ☐ Replacement Unit ☐ To Be Modified ☐ To be Replaced	4SLB	N/A
ENG3	4SLB RICE – Sales/Gas Lift	Caterpillar	3606A4	JFE01205	1875 HP	1875 HP	11/1/2018 / 2019	CAT3 / ENG3	20200254	☑ Existing (unchanged) ☐ To be Removed ☐ New/Additional ☐ Replacement Unit ☐ To Be Modified ☐ To be Replaced	4SLB	N/A
ENG4	4SLB RICE – Sales/Gas Lift	Caterpillar	3606A4	JFE01818	1875 HP	1875 HP	2/21/2022 / Jan-23	CAT5 / ENG5	20200254	☑ Existing (unchanged) ☐ To be Removed ☐ New/Additional ☐ Replacement Unit ☐ To Be Modified ☐ To be Replaced	4SLB	N/A
ENG5	4SLB RICE – Sales/Gas Lift	Caterpillar	3606A4	JFE01188	1875 HP	1875 HP	10/1/2018 / 2019	CAT5 / ENG5	20200254	☑ Existing (unchanged) ☐ To be Removed ☐ New/Additional ☐ Replacement Unit ☐ To Be Modified ☐ To be Replaced	4SLB	N/A
ENG6	4SLB RICE – Sales/Gas Lift	Caterpillar	3606A4	JFE01204	1875 HP	1875 HP	11/1/2018 / 2019	CAT6 / ENG6	20200254	☑ Existing (unchanged) ☐ To be Removed ☐ New/Additional ☐ Replacement Unit ☐ To Be Modified ☐ To be Replaced	4SLB	N/A
ENG7	4SLB RICE – Sales/Gas Lift	Caterpillar	3606A4	JFE01745	1875 HP	1875 HP	3/1/2020 / 2020	CAT7 / ENG7	20200254	☑ Existing (unchanged) ☐ To be Removed ☐ New/Additional ☐ Replacement Unit ☐ To Be Modified ☐ To be Replaced	4SLB	N/A
ENG8	4SLB RICE – Sales/Gas Lift	Caterpillar	3606A4	JFE01728	1875 HP	1875 HP	12/1/2019 / 2020	CAT8 / ENG8	20200254	☑ Existing (unchanged) ☐ To be Removed ☐ New/Additional ☐ Replacement Unit ☐ To Be Modified ☐ To be Replaced	4SLB	N/A
ENG9	4SLB RICE – Sales/Gas Lift	Caterpillar	3606A4	TBD	1875 HP	1875 HP	TBD / TBD	CAT9 / ENG9	20200254	☑ Existing (unchanged) ☐ To be Removed ☐ New/Additional ☐ Replacement Unit ☐ To Be Modified ☐ To be Replaced	4SLB	N/A
ENG10	4SLB RICE – Sales/Gas Lift	Caterpillar	3606A4	TBD	1875 HP	1875 HP	TBD / TBD	CAT10 / ENG10	20200254	☑ Existing (unchanged) ☐ To be Removed ☐ New/Additional ☐ Replacement Unit ☐ To Be Modified ☐ To be Replaced	4SLB	N/A
ENG11	4SLB RICE – Sales/Gas Lift	Caterpillar	3606A4	TBD	1875 HP	1875 HP	TBD / TBD	CAT11 / ENG11	20200254	☑ Existing (unchanged) ☐ To be Removed ☐ New/Additional ☐ Replacement Unit ☐ To Be Modified ☐ To be Replaced	4SLB	N/A
ENG12	4SLB RICE – Sales/Gas Lift	Caterpillar	3606A4	TBD	1875 HP	1875 HP	TBD / TBD	CAT12 / ENG12	20200254	☑ Existing (unchanged) ☐ To be Removed ☐ New/Additional ☐ Replacement Unit ☐ To Be Modified ☐ To be Replaced	4SLB	N/A
OT1	Condensate Tank	Long Industries	N/A	5-18-025-005	1000 BBL	1000 BBL	2018 / 2018	FL2/FL3 / FL2/FL3	40400311	☑ Existing (unchanged) ☐ To be Removed ☐ New/Additional ☐ Replacement Unit ☐ To Be Modified ☐ To be Replaced	N/A	N/A
OT2	Condensate Tank	Long Industries	N/A	5-18-025-006	1000 BBL	1000 BBL	2018 / 2018	FL2/FL3 / FL2/FL3	40400311	☑ Existing (unchanged) ☐ To be Removed ☐ New/Additional ☐ Replacement Unit ☐ To Be Modified ☐ To be Replaced	N/A	N/A

Unit Number[1]	Source Description	Make	Model #	Serial #	Manufacturer's Rated Capacity[3] (Specify Units)	Requested Permitted Capacity[3] (Specify Units)	Date of Manufacture[2] / Date of Construction/ Reconstruction[2]	Controlled by Unit # / Emissions vented to Stack #	Source Classification Code (SCC)	For Each Piece of Equipment, Check Onc	RICE Ignition Type (CI, SI, 4SLB, 2SLB)[4]	Replacing Unit No.
OT3	Condensate Tank	Long Industries	N/A	5-18-025-007	1000 BBL	1000 BBL	2018 2018	FL2/FL3 FL2/FL3	40400311	☑ Existing (unchanged) ☐ To be Removed ☐ New/Additional ☐ Replacement Unit ☐ To Be Modified ☐ To be Replaced	N/A	N/A
OT4	Condensate Tank	Long Industries	N/A	5-18-025-008	1000 BBL	1000 BBL	2018 2018	FL2/FL3 FL2/FL3	40400311	☑ Existing (unchanged) ☐ To be Removed ☐ New/Additional ☐ Replacement Unit ☐ To Be Modified ☐ To be Replaced	N/A	N/A
OT5	Off-Specification Condensate Tank	Long Industries	N/A	5-18-029-002	1000 BBL	1000 BBL	2018 2018	FL2/FL3 FL2/FL3	40400311	☑ Existing (unchanged) ☐ To be Removed ☐ New/Additional ☐ Replacement Unit ☐ To Be Modified ☐ To be Replaced	N/A	N/A
WT1	Produced Water Tank	Long Industries	N/A	5-18-037-009	1000 BBL	1000 BBL	2018 2018	FL2/FL3 FL2/FL3	40400315	☑ Existing (unchanged) ☐ To be Removed ☐ New/Additional ☐ Replacement Unit ☐ To Be Modified ☐ To be Replaced	N/A	N/A
WT2	Produced Water Tank	Long Industries	N/A	5-18-027-010	1000 BBL	1000 BBL	2018 2018	FL2/FL3 FL2/FL3	40400315	☑ Existing (unchanged) ☐ To be Removed ☐ New/Additional ☐ Replacement Unit ☐ To Be Modified ☐ To be Replaced	N/A	N/A
WT3	Produced Water Tank	Long Industries	N/A	5-18-027-011	1000 BBL	1000 BBL	2018 2018	FL2/FL3 FL2/FL3	40400315	☑ Existing (unchanged) ☐ To be Removed ☐ New/Additional ☐ Replacement Unit ☐ To Be Modified ☐ To be Replaced	N/A	N/A
WT4	Produced Water Tank	Long Industries	N/A	5-18-027-012	1000 BBL	1000 BBL	2018 2018	FL2/FL3 FL2/FL3	40400315	☑ Existing (unchanged) ☐ To be Removed ☐ New/Additional ☐ Replacement Unit ☐ To Be Modified ☐ To be Replaced	N/A	N/A
WT5	Produced Water Tank	Long Industries	N/A	5-18-027-013	1000 BBL	1000 BBL	2018 2018	FL2/FL3 FL2/FL3	40400315	☑ Existing (unchanged) ☐ To be Removed ☐ New/Additional ☐ Replacement Unit ☐ To Be Modified ☐ To be Replaced	N/A	N/A
WT6	Produced Water Tank	Long Industries	N/A	5-18-027-014	1000 BBL	1000 BBL	2018 2018	FL2/FL3 FL2/FL3	40400315	☑ Existing (unchanged) ☐ To be Removed ☐ New/Additional ☐ Replacement Unit ☐ To Be Modified ☐ To be Replaced	N/A	N/A
WT7	Produced Water Tank	Long Industries	N/A	5-18-027-015	1000 BBL	1000 BBL	2018 2018	FL2/FL3 FL2/FL3	40400315	☑ Existing (unchanged) ☐ To be Removed ☐ New/Additional ☐ Replacement Unit ☐ To Be Modified ☐ To be Replaced	N/A	N/A
WT8	Produced Water Tank	Long Industries	N/A	5-18-027-016	1000 BBL	1000 BBL	2018 2018	FL2/FL3 FL2/FL3	40400315	☑ Existing (unchanged) ☐ To be Removed ☐ New/Additional ☐ Replacement Unit ☐ To Be Modified ☐ To be Replaced	N/A	N/A
GB1	Gun Barrel	Long Industries	N/A	5-20-097-001	1000 BBL	1000 BBL	2021 2021	FL2/FL3 FL2/FL3	31000107	☑ Existing (unchanged) ☐ To be Removed ☐ New/Additional ☐ Replacement Unit ☐ To Be Modified ☐ To be Replaced	N/A	N/A
GB2	Gun Barrel	Long Industries	N/A	5-21-036-5-18-126-001	1000 BBL	1000 BBL	2021 2021	FL2/FL3 FL2/FL3	31000107	☑ Existing (unchanged) ☐ To be Removed ☐ New/Additional ☐ Replacement Unit ☐ To Be Modified ☐ To be Replaced	N/A	N/A
ST1	Slop Tank	Long Industries	N/A	5-18-028-003	1000 BBL	1000 BBL	2018 2018	FL2/FL3 FL2/FL3	40400311	☑ Existing (unchanged) ☐ To be Removed ☐ New/Additional ☐ Replacement Unit ☐ To Be Modified ☐ To be Replaced	N/A	N/A
ST2	Slop Tank	Long Industries	N/A	5-18-028-004	1000 BBL	1000 BBL	2018 2018	FL2/FL3 FL2/FL3	40400311	☑ Existing (unchanged) ☐ To be Removed ☐ New/Additional ☐ Replacement Unit ☐ To Be Modified ☐ To be Replaced	N/A	N/A
FL1	Flare	Zeeco	N/A	45786 - 011	27 MMscfd	27 MMscfd	2021 2021	N/A FL1	31000160	☑ Existing (unchanged) ☐ To be Removed ☐ New/Additional ☐ Replacement Unit ☐ To Be Modified ☐ To be Replaced	N/A	N/A

Unit Number[1]	Source Description	Make	Model #	Serial #	Manufacturer's Rated Capacity[3] (Specify Units)	Requested Permitted Capacity[3] (Specify Units)	Date of Manufacture[2] / Date of Construction/ Reconstruction[2]	Controlled by Unit # / Emissions vented to Stack #	Source Classification Code (SCC)	For Each Piece of Equipment, Check Onc	RICE Ignition Type (CI, SI, 4SLB, 2SLB)[4]	Replacing Unit No.
STAB1	Stabilizer Heater	Flameco	N/A	1803-861	3.5 MMBtu/hr	3.5 MMBtu/hr	2018 2018	N/A STAB1	31000404	☑ Existing (unchanged) ☐ To be Removed ☐ New/Additional ☐ Replacement Unit ☐ To Be Modified ☐ To be Replaced	N/A	N/A
STAB2	Stabilizer Heater	Flameco	N/A	1803-858	3.5 MMBtu/hr	3.5 MMBtu/hr	2018 2018	N/A STAB2	31000404	☑ Existing (unchanged) ☐ To be Removed ☐ New/Additional ☐ Replacement Unit ☐ To Be Modified ☐ To be Replaced	N/A	N/A
STAB3	Stabilizer Heater	Flameco	N/A	1710-882	3.5 MMBtu/hr	3.5 MMBtu/hr	2018 2018	N/A STAB3	31000404	☑ Existing (unchanged) ☐ To be Removed ☐ New/Additional ☐ Replacement Unit ☐ To Be Modified ☐ To be Replaced	N/A	N/A
LH1	Line Heater	JW Williams	N/A	W03967458-2	1 MMBtu/hr	1 MMBtu/hr	2014 2020	N/A LH1	31000404	☑ Existing (unchanged) ☐ To be Removed ☐ New/Additional ☐ Replacement Unit ☐ To Be Modified ☐ To be Replaced	N/A	N/A
SSM	SSM Emissions	N/A	N/A	N/A	N/A	N/A	N/A N/A	N/A N/A	31088811	☑ Existing (unchanged) ☐ To be Removed ☐ New/Additional ☐ Replacement Unit ☐ To Be Modified ☐ To be Replaced	N/A	N/A
FUG	Fugitive Emissions	N/A	N/A	N/A	N/A	N/A	N/A Post-2015	N/A N/A	31088811	☐ Existing (unchanged) ☐ To be Removed ☐ New/Additional ☐ Replacement Unit ☑ To Be Modified ☐ To be Replaced	N/A	N/A
RB1	Glycol Reboiler	Flameco	N/A	1803-852	0.5 MMBtu/hr	0.5 MMBtu/hr	2018 2018	N/A RB1	31000228	☑ Existing (unchanged) ☐ To be Removed ☐ New/Additional ☐ Replacement Unit ☐ To Be Modified ☐ To be Replaced	N/A	N/A
DEHY1	TEG Dehydrator	Valerus	N/A	SCOP-0	21 MMscfd	21 MMscfd	2018 2018	COND1/RB1 RB1	31000227	☑ Existing (unchanged) ☐ To be Removed ☐ New/Additional ☐ Replacement Unit ☐ To Be Modified ☐ To be Replaced	N/A	N/A
RB2	Glycol Reboiler	Flameco	N/A	1803-850	0.5 MMBtu/hr	0.5 MMBtu/hr	2018 2018	N/A RB2	31000228	☑ Existing (unchanged) ☐ To be Removed ☐ New/Additional ☐ Replacement Unit ☐ To Be Modified ☐ To be Replaced	N/A	N/A
DEHY2	TEG Dehydrator	Valerus	N/A	SCOP45-0	21 MMscfd	21 MMscfd	2018 2018	COND2/RB2 RB2	31000227	☑ Existing (unchanged) ☐ To be Removed ☐ New/Additional ☐ Replacement Unit ☐ To Be Modified ☐ To be Replaced	N/A	N/A
RB3	Glycol Reboiler	Flameco	N/A	1803-854	0.75 MMBtu/hr	0.75 MMBtu/hr	2018 2018	N/A RB3	31000228	☑ Existing (unchanged) ☐ To be Removed ☐ New/Additional ☐ Replacement Unit ☐ To Be Modified ☐ To be Replaced	N/A	N/A
DEHY3	TEG Dehydrator	Valerus	N/A	SCOP34-0	41 MMscfd	41 MMscfd	2018 2018	COND3/RB3 RB3	31000227	☑ Existing (unchanged) ☐ To be Removed ☐ New/Additional ☐ Replacement Unit ☐ To Be Modified ☐ To be Replaced	N/A	N/A
RB4	Glycol Reboiler	Flameco	N/A	1803-713	0.75 MMBtu/hr	0.75 MMBtu/hr	2018 2018	N/A RB4	31000228	☑ Existing (unchanged) ☐ To be Removed ☐ New/Additional ☐ Replacement Unit ☐ To Be Modified ☐ To be Replaced	N/A	N/A
DEHY4	TEG Dehydrator	Valerus	N/A	SCOP47-0	41 MMscfd	41 MMscfd	2018 2018	COND4/RB4 RB4	31000227	☑ Existing (unchanged) ☐ To be Removed ☐ New/Additional ☐ Replacement Unit ☐ To Be Modified ☐ To be Replaced	N/A	N/A

Unit Number[1]	Source Description	Make	Model #	Serial #	Manufacturer's Rated Capacity[3] (Specify Units)	Requested Permitted Capacity[3] (Specify Units)	Date of Manufacture[2] / Date of Construction/ Reconstruction[2]	Controlled by Unit # / Emissions vented to Stack #	Source Classification Code (SCC)	For Each Piece of Equipment, Check Onc	RICE Ignition Type (CI, SI, 4SLB, 2SLB)[4]	Replacing Unit No.
VRT1	Vapor Recovery Tower	N/A	N/A	N/A	N/A	N/A	2020 2020	VRU1/VRU2 FL2/FL3	N/A	☑ Existing (unchanged) ☐ To be Removed ☐ New/Additional ☐ Replacement Unit ☐ To Be Modified ☐ To be Replaced	N/A	N/A
VRU1	Vapor Recovery Unit (Electric)	AIR MAC	N/A	18317-101	N/A	N/A	2020 2020	FL2/FL3 N/A	N/A	☑ Existing (unchanged) ☐ To be Removed ☐ New/Additional ☐ Replacement Unit ☐ To Be Modified ☐ To be Replaced	N/A	N/A
VRU2	Vapor Recovery Unit (Redundant)	AIR MAC	N/A	18421-101	N/A	N/A	2022 2022	FL2/FL3 N/A	N/A	☑ Existing (unchanged) ☐ To be Removed ☐ New/Additional ☐ Replacement Unit ☐ To Be Modified ☐ To be Replaced	N/A	N/A
VRU3	Vapor Recovery Unit (Redundant)	Platinum	N/A	RD80D22043	N/A	N/A	2022 2022	FL2/FL3 N/A	N/A	☑ Existing (unchanged) ☐ To be Removed ☐ New/Additional ☐ Replacement Unit ☐ To Be Modified ☐ To be Replaced	N/A	N/A
WDGV1	Water Degas Vessel	Cameron	N/A	A154-4113342	N/A	N/A	2020 2020	VRU1/VRU2 FL2/FL3	N/A	☑ Existing (unchanged) ☐ To be Removed ☐ New/Additional ☐ Replacement Unit ☐ To Be Modified ☐ To be Replaced	N/A	N/A
OHS1	Overhead Gas Scrubber	K&K	N/A	V17510-A	N/A	N/A	2014 2018	VRU1/VRU2 FL2/FL3	N/A	☑ Existing (unchanged) ☐ To be Removed ☐ New/Additional ☐ Replacement Unit ☐ To Be Modified ☐ To be Replaced	N/A	N/A
FL2	Flare	Zeeco	N/A	45786 - 012	3 MMscfd	3 MMscfd	2/2022 2/2022	N/A FL2	31000160	☑ Existing (unchanged) ☐ To be Removed ☐ New/Additional ☐ Replacement Unit ☐ To Be Modified ☐ To be Replaced	N/A	N/A
FL3	Flare	Zeeco	N/A	45786-011	3 MMscfd	3 MMscfd	2/2022 2/2022	N/A FL3	31000160	☑ Existing (unchanged) ☐ To be Removed ☐ New/Additional ☐ Replacement Unit ☐ To Be Modified ☐ To be Replaced	N/A	N/A
MF	Malfunction Emissions	N/A	N/A	N/A	N/A	N/A	N/A N/A	N/A N/A	N/A	☑ Existing (unchanged) ☐ To be Removed ☐ New/Additional ☐ Replacement Unit ☐ To Be Modified ☐ To be Replaced	N/A	N/A

[1] Unit numbers must correspond to unit numbers in the previous permit unless a complete cross reference table of all units in both permits is provided.
[2] Specify dates required to determine regulatory applicability.
[3] To properly account for power conversion efficiencies, generator set rated capacity shall be reported as the rated capacity of the engine in horsepower, not the kilowatt capacity of the generator set.
[4] "4SLB" means four stroke lean burn engine, "4SRB" means four stroke rich burn engine, "2SLB" means two stroke lean burn engine, "CI" means compression ignition, and "SI" means spark ignition

Table 2-B: Exempted Equipment (20.2.72 NMAC)

All 20.2.70 NMAC (Title V) applications must list all Insignificant Activities in this table. All 20.2.72 NMAC applications must list Exempted Equipment in this table. If equipment listed on this table is exempt under 20.2.72.202.B.5, include emissions calculations and emissions totals for 202.B.5 "similar functions" units, operations, and activities in Section 6, Calculations. Equipment and activities exempted under 20.2.72.202 NMAC may not necessarily be Insignificant under 20.2.70 NMAC (and vice versa). Unit & stack numbering must be consistent throughout the application package. Per Exemptions Policy 02-012.00 (see http://www.env.nm.gov/aqb/permit/aqb_pol.html), 20.2.72.202.B NMAC Exemptions do not apply, but 20.2.72.202.A NMAC exemptions do apply to NOI facilities under

Unit Number	Source Description	Manufacturer	Model No. / Serial No.	Max Capacity / Capacity Units	List Specific 20.2.72.202 NMAC Exemption (e.g. 20.2.72.202.B.5)	Date of Manufacture /Reconstruction[1] / Date of Installation /Construction[1]	For Each Piece of Equipment, Check Onc
LOT	Multiple lubricant oil storage tanks	Varies	N/A N/A	120-520 gallons	20.2.72.202.B.5	2019 to present 2019 to present	☒ Existing (unchanged) ☐ To be Removed ☐ New/Additional ☐ Replacement Unit ☐ To Be Modified ☐ To be Replaced
MEOHT	Multiple methanol storage tanks	Varies	N/A N/A	120-520 gallons	20.2.72.202.B.5	2019 to present 2019 to present	☒ Existing (unchanged) ☐ To be Removed ☐ New/Additional ☐ Replacement Unit ☐ To Be Modified ☐ To be Replaced
EGT	Multiple coolant storage tanks	Varies	N/A N/A	120-520 gallons	20.2.72.202.B.5	2019 to present 2019 to present	☒ Existing (unchanged) ☐ To be Removed ☐ New/Additional ☐ Replacement Unit ☐ To Be Modified ☐ To be Replaced
							☐ Existing (unchanged) ☐ To be Removed ☐ New/Additional ☐ Replacement Unit ☐ To Be Modified ☐ To be Replaced
							☐ Existing (unchanged) ☐ To be Removed ☐ New/Additional ☐ Replacement Unit ☐ To Be Modified ☐ To be Replaced
							☐ Existing (unchanged) ☐ To be Removed ☐ New/Additional ☐ Replacement Unit ☐ To Be Modified ☐ To be Replaced
							☐ Existing (unchanged) ☐ To be Removed ☐ New/Additional ☐ Replacement Unit ☐ To Be Modified ☐ To be Replaced
							☐ Existing (unchanged) ☐ To be Removed ☐ New/Additional ☐ Replacement Unit ☐ To Be Modified ☐ To be Replaced
							☐ Existing (unchanged) ☐ To be Removed ☐ New/Additional ☐ Replacement Unit ☐ To Be Modified ☐ To be Replaced
							☐ Existing (unchanged) ☐ To be Removed ☐ New/Additional ☐ Replacement Unit ☐ To Be Modified ☐ To be Replaced
							☐ Existing (unchanged) ☐ To be Removed ☐ New/Additional ☐ Replacement Unit ☐ To Be Modified ☐ To be Replaced
							☐ Existing (unchanged) ☐ To be Removed ☐ New/Additional ☐ Replacement Unit ☐ To Be Modified ☐ To be Replaced
							☐ Existing (unchanged) ☐ To be Removed ☐ New/Additional ☐ Replacement Unit ☐ To Be Modified ☐ To be Replaced
							☐ Existing (unchanged) ☐ To be Removed ☐ New/Additional ☐ Replacement Unit ☐ To Be Modified ☐ To be Replaced

[1] Insignificant activities exempted due to size or production rate are defined in 20.2.70.300.D.6, 20.2.70.7.Q NMAC, and the NMED/AQB List of Insignificant Activities, dated September 15, 2008. Emissions from these insignificant activities do not need to be reported, unless specifically requested.

[2] Specify date(s) required to determine regulatory applicability.

Table 2-C: Emissions Control Equipment

Unit and stack numbering must correspond throughout the application package. Only list control equipment for TAPs if the TAP's maximum uncontrolled emissions rate is over its respective threshold as listed in 20.2.72 NMAC, Subpart V, Tables A and B. In accordance with 20.2.72.203.A(3) and (8) NMAC, 20.2.70.300.D(5)(b) and (e) NMAC, and 20.2.73.200.B(7) NMAC, the permittee shall report all control devices and list each pollutant controlled by the control device regardless if the applicant takes credit for the reduction in emissions.

Control Equipment Unit No.	Control Equipment Description	Date Installed	Controlled Pollutant(s)	Controlling Emissions for Unit Number(s)[1]	Efficiency (% Control by Weight)	Method used to Estimate Efficiency
FL1	Flare	2022	VOC/HAP	HP Gas (Compressor downtime, blowdowns and starter vents)	98	Manufacturer
COND1	BTEX Condenser	2018	VOC/HAP	DEHY1	33	Promax
COND2	BTEX Condenser	2018	VOC/HAP	DEHY2	33	Promax
COND3	BTEX Condenser	2018	VOC/HAP	DEHY3	33	Promax
COND4	BTEX Condenser	2018	VOC/HAP	DEHY4	33	Promax
RB1	Glycol Reboiler	2018	VOC/HAP	DEHY1	98	Engineering Design
RB2	Glycol Reboiler	2018	VOC/HAP	DEHY2	98	Engineering Design
RB3	Glycol Reboiler	2018	VOC/HAP	DEHY3	98	Engineering Design
RB4	Glycol Reboiler	2018	VOC/HAP	DEHY4	98	Engineering Design
VRU1	Vapor Recovery System	2020	VOC/HAP	OT1-OT5, ST1-ST2, GB1-GB2, WT1-WT8, WDGV1, OHS1	100	Engineering Design
CAT1	Catalyst	TBD	CO, VOC, HCOH, HAP	ENG1	78.1, 25.5, 78.95, 25.5	Manufacturer
CAT2	Catalyst	2018	CO, VOC, HCOH, HAP	ENG2	78.1, 25.5, 78.95, 25.5	Manufacturer
CAT3	Catalyst	2019	CO, VOC, HCOH, HAP	ENG3	78.1, 25.5, 78.95, 25.5	Manufacturer
CAT4	Catalyst	2019	CO, VOC, HCOH, HAP	ENG5	78.1, 25.5, 78.95, 25.5	Manufacturer
CAT5	Catalyst	2019	CO, VOC, HCOH, HAP	ENG6	78.1, 25.5, 78.95, 25.5	Manufacturer
CAT6	Catalyst	2020	CO, VOC, HCOH, HAP	ENG7	78.1, 25.5, 78.95, 25.5	Manufacturer
CAT7	Catalyst	2019	CO, VOC, HCOH, HAP	ENG8	78.1, 25.5, 78.95, 25.5	Manufacturer
CAT8	Catalyst	2019	CO, VOC, HCOH, HAP	ENG5	78.1, 25.5, 78.95, 25.5	Manufacturer
CAT9	Catalyst	TBD	CO, VOC, HCOH, HAP	ENG6	78.1, 25.5, 78.95, 25.5	Manufacturer
CAT10	Catalyst	TBD	CO, VOC, HCOH, HAP	ENG7	78.1, 25.5, 78.95, 25.5	Manufacturer
CAT11	Catalyst	TBD	CO, VOC, HCOH, HAP	ENG8	78.1, 25.5, 78.95, 25.5	Manufacturer
CAT12	Catalyst	TBD	CO, VOC, HCOH, HAP	ENG7	78.1, 25.5, 78.95, 25.5	Manufacturer
FL2	Flare	2022	VOC/HAP	OT1-OT5, ST1-ST2, GB1-GB2, WT1-WT8, WDGV1, OHS1	98	Manufacturer
FL3	Flare	2022	VOC/HAP	OT1-OT5, ST1-ST2, GB1-GB2, WT1-WT8, WDGV1, OHS1	98	Manufacturer
VRU2	Vapor Recovery System	2019	VOC/HAP	OT1-OT5, ST1-ST2, GB1-GB2, WT1-WT8, WDGV1, OHS1	100	Engineering Design
VRU3	Vapor Recovery System	2022	VOC/HAP	OT1-OT5, ST1-ST2, GB1-GB2, WT1-WT8, WDGV1, OHS1	100	Manufacturer

[1] List each control device on a separate line. For each control device, list all emission units controlled by the control device.

Table 2-D: Maximum Emissions (Consider federally enforceable controls under normal operating conditions)

This table must be filled out

Maximum Federally Enforceable Emissions are the emissions at maximum capacity with only federally enforceable methods of reducing emissions. Calculate the hourly emissions using the worst case hourly emissions for each pollutant. For each pollutant, calculate the annual emissions as if the facility were operating at maximum facility capacity without pollution controls for 8760 hours per year. Account for federally enforcable controls, such as an NSPS or MACT regulation. Consider federally enforceable controls due to permitting. List Hazardous Air Pollutants (HAP) in Table 2-I. Unit & stack numbering must be consistent throughout the application package. Fill all cells in this table with the emission numbers or a "-" symbol. A "-" symbol indicates that emissions of this pollutant are not expected. Numbers shall be expressed to at least 2 decimal points (e.g. 0.41, 1.41, or 1.41E-4).

Unit No.	NOx		CO		VOC		SOx		PM10[1]		PM2.5[1]		H_2S		Lead	
	lb/hr	ton/yr	lb/hr	ton/yr	lb/hr	ton/yr	lb/hr	ton/yr	lb/hr	ton/yr	lb/hr	ton/yr	lb/hr	ton/yr	lb/hr	ton/yr
ENG1	1.24	5.43	11.33	49.61	4.82	21.13	0.17	0.74	0.15	0.65	0.15	0.65	--	--	0.0	0.0
ENG2	1.24	5.43	11.33	49.61	4.82	21.13	0.17	0.74	0.15	0.65	0.15	0.65	--	--	0.0	0.0
ENG3	1.24	5.43	11.33	49.61	4.82	21.13	0.17	0.74	0.15	0.65	0.15	0.65	--	--	0.0	0.0
ENG4	1.24	5.43	11.33	49.61	4.82	21.13	0.17	0.74	0.15	0.65	0.15	0.65	--	--	0.0	0.0
ENG5	1.24	5.43	11.33	49.61	4.82	21.13	0.17	0.74	0.15	0.65	0.15	0.65	--	--	0.0	0.0
ENG6	1.24	5.43	11.33	49.61	4.82	21.13	0.17	0.74	0.15	0.65	0.15	0.65	--	--	0.0	0.0
ENG7	1.24	5.43	11.33	49.61	4.82	21.13	0.17	0.74	0.15	0.65	0.15	0.65	--	--	0.0	0.0
ENG8	1.24	5.43	11.33	49.61	4.82	21.13	0.17	0.74	0.15	0.65	0.15	0.65	--	--	0.0	0.0
ENG9	1.24	5.43	11.33	49.61	4.82	21.13	0.17	0.74	0.15	0.65	0.15	0.65	--	--	0.0	0.0
ENG10	1.24	5.43	11.33	49.61	4.82	21.13	0.17	0.74	0.15	0.65	0.15	0.65	--	--	0.0	0.0
ENG11	1.24	5.43	11.33	49.61	4.82	21.13	0.17	0.74	0.15	0.65	0.15	0.65	--	--	0.0	0.0
ENG12	1.24	5.43	11.33	49.61	4.82	21.13	0.17	0.74	0.15	0.65	0.15	0.65	--	--	0.0	0.0
OT1	--	--	--	--	40.27	141.11	--	--	--	--	--	--	--	--	--	--
OT2	--	--	--	--	40.27	141.11	--	--	--	--	--	--	--	--	--	--
OT3	--	--	--	--	40.27	141.11	--	--	--	--	--	--	--	--	--	--
OT4	--	--	--	--	40.27	141.11	--	--	--	--	--	--	--	--	--	--
OT5	--	--	--	--	433.53	1519.11	--	--	--	--	--	--	--	--	--	--
WT1	--	--	--	--	0.98	4.29	--	--	--	--	--	--	--	--	--	--
WT2	--	--	--	--	0.98	4.29	--	--	--	--	--	--	--	--	--	--
WT3	--	--	--	--	0.98	4.29	--	--	--	--	--	--	--	--	--	--
WT4	--	--	--	--	0.98	4.29	--	--	--	--	--	--	--	--	--	--
WT5	--	--	--	--	0.98	4.29	--	--	--	--	--	--	--	--	--	--
WT6	--	--	--	--	0.98	4.29	--	--	--	--	--	--	--	--	--	--
WT7	--	--	--	--	0.98	4.29	--	--	--	--	--	--	--	--	--	--
WT8	--	--	--	--	0.98	4.29	--	--	--	--	--	--	--	--	--	--
GB1	--	--	--	--	32.96	144.37	--	--	--	--	--	--	--	--	--	--
GB2	--	--	--	--	32.96	144.37	--	--	--	--	--	--	--	--	--	--
ST1	--	--	--	--	1.91	8.37	--	--	--	--	--	--	--	--	--	--
ST2	--	--	--	--	1.91	8.37	--	--	--	--	--	--	--	--	--	--
FL1	0.04	0.18	0.08	0.35	0.06	0.28	0.00	0.01	0.00	0.00	0.00	0.00	--	--		
STAB1	0.42	1.86	0.36	1.56	0.02	0.10	0.00	0.01	0.03	0.14	0.03	0.14	--	--	--	--
STAB2	0.42	1.86	0.36	1.56	0.02	0.10	0.00	0.01	0.03	0.14	0.03	0.14	--	--	--	--
FUG	--	--	--	--	3.127982	13.70056	--	--	--	--	--	--	--	--	--	--

Table 2-D: Maximum Emissions (Consider federally enforceable controls under normal operating conditions)

This table must be filled out

Maximum Federally Enforceable Emissions are the emissions at maximum capacity with only federally enforceable methods of reducing emissions. Calculate the hourly emissions using the worst case hourly emissions for each pollutant. For each pollutant, calculate the annual emissions as if the facility were operating at maximum facility capacity without pollution controls for 8760 hours per year. Account for federally enforcable controls, such as an NSPS or MACT regulation. Consider federally enforceable controls due to permitting. List Hazardous Air Pollutants (HAP) in Table 2-I. Unit & stack numbering must be consistent throughout the application package. Fill all cells in this table with the emission numbers or a "-" symbol. A "-" symbol indicates that emissions of this pollutant are not expected. Numbers shall be expressed to at least 2 decimal points (e.g. 0.41, 1.41, or 1.41E-4).

Unit No.	NOx		CO		VOC		SOx		PM10[1]		PM2.5[1]		H_2S		Lead	
	lb/hr	ton/yr	lb/hr	ton/yr	lb/hr	ton/yr	lb/hr	ton/yr	lb/hr	ton/yr	lb/hr	ton/yr	lb/hr	ton/yr	lb/hr	ton/yr
DEHY1	--	--	--	--	20.77	90.98	--	--	--	--	--	--	--	--	--	--
RB1	0.12	0.54	0.10	0.46	0.01	0.03	0.00	0.00	0.01	0.04	0.01	0.04	--	--	--	--
DEHY2					20.77	90.98							--	--	--	--
RB2	0.12	0.54	0.10	0.46	0.01	0.03	0.00	0.00	0.01	0.04	0.01	0.04	--	--	--	--
LH1	0.12	0.53	0.10	0.45	0.01	0.03	0.00	0.00	0.01	0.04	0.01	0.04	--	--	--	--
OHS	--	--	--	--	1915.31	6711.24	--	--	--	--	--	--	--	--	--	--
WDGV1	--	--	--	--	344.06	1205.59	--	--	--	--	--	--	--	--	--	--
FL2	0.06	0.27	0.13	0.55	0.10	0.44	0.00	0.02	0.00	0.00	0.00	0.00	--	--	--	--
FL3	0.06	0.27	0.13	0.55	0.10	0.44	0.00	0.02	0.00	0.00	0.00	0.00	--	--	--	--
RB3	0.19	0.81	0.16	0.68	0.01	0.04	0.00	0.00	0.01	0.06	0.01	0.06	--	--	--	--
DEHY3	--	--	--	--	36.30	158.98	--	--	--	--	--	--	--	--	--	--
RB4	0.19	0.81	0.16	0.68	0.01	0.04	0.00	0.00	0.01	0.06	0.01	0.06	--	--	--	--
DEHY4	--	--	--	--	36.30	158.98	--	--	--	--	--	--	--	--	--	--
STAB3	0.42	1.86	0.36	1.56	0.02	0.10	0.00	0.01	0.03	0.14	0.03	0.14	--	--	--	--
VRT	--	--	--	--	434.02	1520.81	--	--	--	--	--	--	--	--	--	--
Totals	17.1	74.7	137.9	604.2	3541.1	12629.8	2.0	9.0	1.9	8.4	1.9	8.4	--	--		

[1] **Condensable Particulate Matter:** Include condensable particulate matter emissions for PM10 and PM2.5 if the source is a combustion source.

Table 2-E: Requested Allowable Emissions

Unit & stack numbering must be consistent throughout the application package. Fill all cells in this table with the emission numbers or a "-" symbol. A "-" symbol indicates that emissions of this pollutant are not expected. Numbers shall be expressed to at least 2 decimal points (e.g. 0.41, 1.41, or $1.41E^4$).

Unit No.	NOx		CO		VOC		SOx		PM10[1]		PM2.5[1]		H_2S		Lead	
	lb/hr	ton/yr	lb/hr	ton/yr	lb/hr	ton/yr	lb/hr	ton/yr	lb/hr	ton/yr	lb/hr	ton/yr	lb/hr	ton/yr	lb/hr	ton/yr
ENG1	1.24	5.43	2.48	10.86	3.24	14.21	0.17	0.74	0.15	0.65	0.15	0.65	0.0	0.0	--	--
ENG2	1.24	5.43	2.48	10.86	3.24	14.21	0.17	0.74	0.15	0.65	0.15	0.65	0.0	0.0	--	--
ENG3	1.24	5.43	2.48	10.86	3.24	14.21	0.17	0.74	0.15	0.65	0.15	0.65	0.0	0.0	--	--
ENG4	1.24	5.43	2.48	10.86	3.24	14.21	0.17	0.74	0.15	0.65	0.15	0.65	0.0	0.0	--	--
ENG5	1.24	5.43	2.48	10.86	3.24	14.21	0.17	0.74	0.15	0.65	0.15	0.65	0.0	0.0	--	--
ENG6	1.24	5.43	2.48	10.86	3.24	14.21	0.17	0.74	0.15	0.65	0.15	0.65	0.0	0.0	--	--
ENG7	1.24	5.43	2.48	10.86	3.24	14.21	0.17	0.74	0.15	0.65	0.15	0.65	0.0	0.0	--	--
ENG8	1.24	5.43	2.48	10.86	3.24	14.21	0.17	0.74	0.15	0.65	0.15	0.65	0.0	0.0	--	--
ENG9	1.24	5.43	2.48	10.86	3.24	14.21	0.17	0.74	0.15	0.65	0.15	0.65	0.0	0.0	--	--
ENG10	1.24	5.43	2.48	10.86	3.24	14.21	0.17	0.74	0.15	0.65	0.15	0.65	0.0	0.0	--	--
ENG11	1.24	5.43	2.48	10.86	3.24	14.21	0.17	0.74	0.15	0.65	0.15	0.65	0.0	0.0	--	--
ENG12	1.24	5.43	2.48	10.86	3.24	14.21	0.17	0.74	0.15	0.65	0.15	0.65	0.0	0.0	--	--
OT1	Emissions represented at FL2/FL3															
OT2	Emissions represented at FL2/FL3															
OT3	Emissions represented at FL2/FL3															
OT4	Emissions represented at FL2/FL3															
OT5	Emissions represented at FL2/FL3															
WT1	Emissions represented at FL2/FL3															
WT2	Emissions represented at FL2/FL3															
WT3	Emissions represented at FL2/FL3															
WT4	Emissions represented at FL2/FL3															
WT5	Emissions represented at FL2/FL3															
WT6	Emissions represented at FL2/FL3															
WT7	Emissions represented at FL2/FL3															
WT8	Emissions represented at FL2/FL3															
GB1	Emissions represented at FL2/FL3															
GB2	Emissions represented at FL2/FL3															
ST1	Emissions represented at FL2/FL3															
ST2	Emissions represented at FL2/FL3															
FL1 (Normal)	0.04	0.18	0.08	0.35	0.06	0.28	0.00	0.01	0.00	0.00	0.00	0.00	0.0	0.0	--	--
FL2 (Normal)	0.06	0.27	0.13	0.55	0.10	0.44	0.00	0.02	0.00	0.00	0.00	0.00	0.00	0.00	--	--
FL3 (Normal)	0.06	0.27	0.13	0.55	0.10	0.44	0.00	0.02	0.00	0.00	0.00	0.00	0.0	0.0	--	--
STAB1	0.42	1.86	0.36	1.56	0.02	0.10	0.00	0.01	0.03	0.14	0.03	0.14	0.0	0.0	--	--

Table 2-E: Requested Allowable Emissions

Unit & stack numbering must be consistent throughout the application package. Fill all cells in this table with the emission numbers or a "-" symbol. A "-" symbol indicates that emissions of this pollutant are not expected. Numbers shall be expressed to at least 2 decimal points (e.g. 0.41, 1.41, or $1.41E^4$).

Unit No.	NOx		CO		VOC		SOx		PM10[1]		PM2.5[1]		H_2S		Lead	
	lb/hr	ton/yr	lb/hr	ton/yr	lb/hr	ton/yr	lb/hr	ton/yr	lb/hr	ton/yr	lb/hr	ton/yr	lb/hr	ton/yr	lb/hr	ton/yr
STAB2	0.42	1.86	0.36	1.56	0.02	0.10	0.00	0.01	0.03	0.14	0.03	0.14	0.0	0.0	--	--
STAB3	0.42	1.86	0.36	1.56	0.02	0.10	0.00	0.01	0.03	0.14	0.03	0.14	--	--	--	--
FUG	---	---	---	---	3.13	13.70	---	---	---	---	---	---	0.0	0.0	--	--
DEHY1	---	---	---	---	0.34	1.47	---	---	---	---	---	---	0.0	0.0	--	--
RB1	0.12	0.54	0.10	0.46	0.01	0.03	0.00	0.00	0.01	0.04	0.01	0.04	0.0	0.0	--	--
DEHY2	---	---	---	---	0.34	1.47	---	---	---	---	---	---	0.0	0.0	--	--
RB2	0.12	0.54	0.10	0.46	0.01	0.03	0.00	0.00	0.01	0.04	0.01	0.04	0.0	0.0	--	--
LH1	0.12	0.53	0.10	0.45	0.01	0.03	0.00	0.00	0.01	0.04	0.01	0.04	0.0	0.0	--	--
Malfunction	--	--	--	--	--	10.00	--	--	--	--	--	--	--	--	--	--
RB3	0.19	0.81	0.16	0.68	0.01	0.04	0.00	0.00	0.01	0.06	0.01	0.06	--	--	--	--
DEHY3	--	--	--	--	0.59	2.58	--	--	--	--	--	--	--	--	--	--
RB4	0.19	0.81	0.16	0.68	0.01	0.04	0.00	0.00	0.01	0.06	0.01	0.06	--	--	--	--
DEHY4	--	--	--	--	0.59	2.58	--	--	--	--	--	--	--	--	--	--
WDGV1	Emissions represented at FL2/FL3															
OHS1	Emissions represented at FL2/FL3															
VRT1	Emissions represented at FL2/FL3															
Totals	12.10	53.01	21.86	95.77	31.31	147.13	1.37	6.00	1.33	5.84	1.33	5.84	0.00	0.00	--	--

[1] **Condensable Particulate Matter:** Include condensable particulate matter emissions for PM10 and PM2.5 if the source is a combustion source. Do not include condensable particulate matter for PM unless PM is set equal to PM10 and PM2.5. Particulate matter (PM) is not subject to an ambient air quality standard, but it is a regulated air pollutant under PSD (20.2.74 NMAC) and Title V (20.2.70 NMAC).

Table 2-F: Additional Emissions during Startup, Shutdown, and Routine Maintenance (SSM)

☐ This table is intentionally left blank since all emissions at this facility due to routine or predictable startup, shutdown, or scehduled maintenance are no higher than those listed in Table 2-E and a malfunction emission limit is not already permitted or requested. If you are required to report GHG emissions as described in Section 6a, include any GHG emissions during Startup, Shutdown, and/or Scheduled Maintenance (SSM) in Table 2-P. Provide an explanations of SSM emissions in Section 6 and 6a.

All applications for facilities that have emissions during routine our predictable startup, shutdown or scheduled maintenance (SSM)[1], including NOI applications, must include in this table the Maximum Emissions during routine or predictable startup, shutdown and scheduled maintenance (20.2.7 NMAC, 20.2.72.203.A.3 NMAC, 20.2.73.200.D.2 NMAC). In Section 6 and 6a, provide emissions calculations for all SSM emissions reported in this table. Refer to "Guidance for Submittal of Startup, Shutdown, Maintenance Emissions in Permit Applications (https://www.env.nm.gov/aqb/permit/aqb_pol.html) for more detailed instructions. Numbers shall be expressed to at least 2 decimal points (e.g. 0.41, 1.41, or 1.41E-4).

Unit No.	NOx		CO		VOC		SOx		PM[2]		PM10[2]		PM2.5[2]		H_2S		Lead	
	lb/hr	ton/yr	lb/hr	ton/yr	lb/hr	ton/yr	lb/hr	ton/yr	lb/hr	ton/yr	lb/hr	ton/yr	lb/hr	ton/yr	lb/hr	ton/yr	lb/hr	ton/yr
FL1	199.18	6.20	397.63	12.37	309.29	9.62	0.00	0.00	8.55	0.27	8.55	0.27	8.55	0.27	-	-	-	-
FL2/FL3	14.18	1.51	28.30	3.02	67.56	7.26	0.00	0.00	0.36	0.04	0.36	0.04	0.36	0.04	-	-	-	-
SSM	---	---	---	---	397.87	9.81	---	---	---	---	---	---	---	---	-	-	-	-
Totals	213.35	7.71	425.93	15.39	774.72	26.69	0.00	0.00	8.91	0.30	8.91	0.30	8.91	0.30	-	-	-	-

[1] **For instance**, if the short term steady-state Table 2-E emissions are 5 lb/hr and the SSM rate is 12 lb/hr, enter 7 lb/hr in this table. If the annual steady-state Table 2-E emissions are 21.9 TPY, and the number of scheduled SSM events result in annual emissions of 31.9 TPY, enter 10.0 TPY in the table below.

[2] **Condensable Particulate Matter:** Include condensable particulate matter emissions for PM10 and PM2.5 if the source is a combustion source. Do not include condensable particulate matter for PM unless PM is set equal to PM10 and PM2.5. Particulate matter (PM) is not subject to an ambient air quality standard, but it is a regulated air pollutant under PSD (20.2.74 NMAC) and Title V (20.2.70 NMAC).

Table 2-G: Stack Exit and Fugitive Emission Rates for Special Stacks

☑ I have elected to leave this table blank because this facility does not have any stacks/vents that split emissions from a single source or combine emissions from more than one source listed in table 2-A. Additionally, the emission rates of all stacks match the Requested allowable emission rates stated in Table 2-E.

Use this table to list stack emissions (requested allowable) from split and combined stacks. List Toxic Air Pollutants (TAPs) and Hazardous Air Pollutants (HAPs) in Table 2-I. List all fugitives that are associated with the normal, routine, and non-emergency operation of the facility. Unit and stack numbering must correspond throughout the application package. Refer to Table 2-E for instructions on use of the "-" symbol and on significant figures.

Stack No.	Serving Unit Number(s) from Table 2-A	NOx		CO		VOC		SOx		PM		PM10		PM2.5		☐ H_2S or ☐ Lead	
		lb/hr	ton/yr	lb/hr	ton/yr	lb/hr	ton/yr	lb/hr	ton/yr	lb/hr	ton/yr	lb/hr	ton/yr	lb/hr	ton/yr	lb/hr	ton/yr
Totals:																	

Table 2-H: Stack Exit Conditions

Unit and stack numbering must correspond throughout the application package. Include the stack exit conditions for each unit that emits from a stack, including blowdown venting parameters and tank emissions. If the facility has multiple operating scenarios, complete a separate Table 2-H for each scenario and, for each, type scenario name here:

Stack Number	Serving Unit Number(s) from Table 2-A	Orientation (H-Horizontal V=Vertical)	Rain Caps (Yes or No)	Height Above Ground (ft)	Temp. (F)	Flow Rate (acfs)	Flow Rate (dscfs)	Moisture by Volume (%)	Velocity (ft/sec)	Inside Diameter (ft)
Engine	ENG1	Vertical	No	29.6	809	200			91.7	1.7
Engine	ENG2	Vertical	No	29.6	809	200			91.7	1.7
Engine	ENG3	Vertical	No	29.6	809	200			91.7	1.7
Engine	ENG4	Vertical	No	29.6	809	200			91.7	1.7
Engine	ENG5	Vertical	No	29.6	809	200			91.7	1.7
Engine	ENG6	Vertical	No	29.6	809	200			91.7	1.7
Engine	ENG7	Vertical	No	29.6	809	200			91.7	1.7
Engine	ENG8	Vertical	No	29.6	809	200			91.7	1.7
Engine	ENG9	Vertical	No	29.6	809	200			91.7	1.7
Engine	ENG10	Vertical	No	29.6	809	200			91.7	1.7
Engine	ENG11	Vertical	No	29.6	809	200			91.7	1.7
Engine	ENG12	Vertical	No	29.6	809	200			91.7	1.7
Flare	FL1 (Normal)	Vertical	No	70.0	832	0.1			65.6	1.0
Heater	STAB1	Vertical	No	30.0	700	11			8.0	1.9
Heater	STAB2	Vertical	No	30.0	700	10.8			8.0	1.9
Heater	STAB3	Vertical	No	30.0	700	11			8.0	1.9
Heater	RB1	Vertical	No	20.0	700	1.4			3.9	1.0
Heater	RB2	Vertical	No	20.0	700	1			3.9	1.0
Heater	LH1	Vertical	No	15.0	700	3.1			19.3	0.67
Flare	FL2 (Normal)	Vertical	No	35.0	832	0			65.6	1.0
Flare	FL3 (Normal)	Vertical	No	35.0	832	0.1			65.6	1.0
Heater	RB3	Vertical	No	20.0	700	2			6.8	1.0
Heater	RB4	Vertical	No	20.0	700	2.4			6.8	1.0

Table 2-I: Emission Rates for HAPs

In the table below, report the Potential to Emit for each HAP from each regulated emission unit listed in Table 2-A, only if the entire facility emits the HAP at a rate greater than or equal to one (1) ton per year For each such emission unit, HAPs shall be reported to the nearest 0.1 tpy. Each facility-wide Individual HAP total and the facility-wide Total HAPs shall be the sum of all HAP sources calculated to the nearest 0.1 ton per year. Per 20.2.72.403.A.1 NMAC, facilities not exempt [see 20.2.72.402.C NMAC] from TAP permitting shall report each TAP that has an uncontrolled emission rate in excess of its pounds per hour screening level specified in 20.2.72.502 NMAC. TAPs shall be reported using one more significant figure than the number of significant figures shown in the pound per hour threshold corresponding to the substance. Use the HAP nomenclature as it appears in Section 112 (b) of the 1990 CAAA and the TAP nomenclature as it listed in 20.2.72.502 NMAC. Include tank-flashing emissions estimates of HAPs in this table. For each HAP or TAP listed, fill all cells in this table with the emission numbers or a "-" symbol. A "-" symbol indicates that emissions of this pollutant are not expected or the pollutant is emitted in a quantity less than the threshold amounts described above.

Stack No.	Unit No.(s)	Total HAPs		Formaldehyde ☑ HAP		Acetaldehyde ☑ HAP		Acrolein ☑ HAP		Provide Pollutant Name Here ☐ HAP		Provide Pollutant Name Here ☐ HAP		Provide Pollutant Name Here ☐ HAP		Provide Pollutant Name Here ☐ HAP		Provide Pollutant Name Here ☐ HAP	
		lb/hr	ton/yr	lb/hr	ton/yr	lb/hr	ton/yr	lb/hr	ton/yr	lb/hr	ton/yr	lb/hr	ton/yr	lb/hr	ton/yr	lb/hr	ton/yr	lb/hr	ton/yr
ENG1	ENG1	0.35	1.54	0.17	0.72	0.11	0.50	0.07	0.31										
ENG2	ENG2	0.35	1.54	0.17	0.72	0.11	0.50	0.07	0.31										
ENG3	ENG3	0.35	1.54	0.17	0.72	0.11	0.50	0.07	0.31										
ENG4	ENG5	0.35	1.54	0.17	0.72	0.11	0.50	0.07	0.31										
ENG5	ENG6	0.35	1.54	0.17	0.72	0.11	0.50	0.07	0.31										
ENG6	ENG6	0.35	1.54	0.17	0.72	0.11	0.50	0.07	0.31										
ENG7	ENG7	0.35	1.54	0.17	0.72	0.11	0.50	0.07	0.31										
ENG8	ENG5	0.35	1.54	0.17	0.72	0.11	0.50	0.07	0.31										
ENG9	ENG6	0.35	1.54	0.17	0.72	0.11	0.50	0.07	0.31										
ENG10	ENG10	0.35	1.54	0.17	0.72	0.11	0.50	0.07	0.31										
ENG11	ENG11	0.35	1.54	0.17	0.72	0.11	0.50	0.07	0.31										
ENG11	ENG11	0.35	1.54	0.17	0.72	0.11	0.50	0.07	0.31										
OT1	FL1	Emissions represented at FL2/FL3																	
OT2	FL1	Emissions represented at FL2/FL3																	
OT3	FL1	Emissions represented at FL2/FL3																	
OT4	FL1	Emissions represented at FL2/FL3																	
OT5	FL1	Emissions represented at FL2/FL3																	
WT1	FL1	Emissions represented at FL2/FL3																	
WT2	FL1	Emissions represented at FL2/FL3																	
WT3	FL1	Emissions represented at FL2/FL3																	
WT4	FL1	Emissions represented at FL2/FL3																	
WT5	FL1	Emissions represented at FL2/FL3																	
WT6	FL1	Emissions represented at FL2/FL3																	
WT7	FL1	Emissions represented at FL2/FL3																	
WT8	FL1	Emissions represented at FL2/FL3																	
GB1	FL1	Emissions represented at FL2/FL3																	
GB2	FL1	Emissions represented at FL2/FL3																	

Stack No.	Unit No.(s)	Total HAPs		Formaldehyde ☑ HAP		Acetaldehyde ☑ HAP		Acrolein ☑ HAP		Provide Pollutant Name Here ☐ HAP		Provide Pollutant Name Here ☐ HAP		Provide Pollutant Name Here ☐ HAP		Provide Pollutant Name Here ☐ HAP		Provide Pollutant Name Here ☐ HAP	
		lb/hr	ton/yr	lb/hr	ton/yr	lb/hr	ton/yr	lb/hr	ton/yr	lb/hr	ton/yr	lb/hr	ton/yr	lb/hr	ton/yr	lb/hr	ton/yr	lb/hr	ton/yr
ST1	FL1	Emissions represented at FL2/FL3																	
ST2	FL1	Emissions represented at FL2/FL3																	
FL1	FL1	6.48	0.21	--	--	--	--	--	--										
STAB1	STAB1	0.01	0.03	--	--	--	--	--	--										
STAB2	STAB2	0.01	0.03	--	--	--	--	--	--										
FUG	FUG	0.09	0.39	--	--	--	--	--	--										
DEHY1	DEHY1	0.03	0.15	--	--	--	--	--	--										
RB1	RB1	0.0	0.0	--	--	--	--	--	--										
DEHY2	DEHY2	0.03	0.15	--	--	--	--	--	--										
RB2	RB2	0.0	0.0	--	--	--	--	--	--										
LH1	LH1	0.00	0.01	--	--	--	--	--	--										
FL2/FL3	FL2/FL3	2.2	0.3	--	--	--	--	--	--										
MF	MF	0.00	0.00	--	--	--	--	--	--										
STAB3	STAB3	0.0	0.0	--	--	--	--	--	--										
DEHY3	DEHY3	0.06	0.26	--	--	--	--	--	--										
RB3	RB3	0.0	0.0	--	--	--	--	--	--										
DEHY4	DEHY4	0.06	0.26	--	--	--	--	--	--										
RB4	RB4	0.0	0.0	--	--	--	--	--	--										
Totals:		13.21	20.22	2.0	8.7	1.4	6.0	0.8	3.7										

Table 2-J: Fuel

Specify fuel characteristics and usage. Unit and stack numbering must correspond throughout the application package.

Unit No.	Fuel Type (low sulfur Diesel, ultra low sulfur diesel, Natural Gas, Coal, …)	Fuel Source: purchased commercial, pipeline quality natural gas, residue gas, raw/field natural gas, process gas (e.g. SRU tail gas) or other	Specify Units				
			Lower Heating Value	Hourly Usage (scf)	Annual Usage (MMscf)	% Sulfur	% Ash
ENG1	Natural Gas	Treated Field Gas	1262	11794	103.3	0	0
ENG2	Natural Gas	Treated Field Gas	1262	11794	103.3	0	0
ENG3	Natural Gas	Treated Field Gas	1262	11794	103.3	0	0
ENG4	Natural Gas	Treated Field Gas	1262	11794	103.3	0	0
ENG5	Natural Gas	Treated Field Gas	1262	11794	103.3	0	0
ENG6	Natural Gas	Treated Field Gas	1262	11794	103.3	0	0
ENG7	Natural Gas	Treated Field Gas	1262	11794	103.3	0	0
ENG8	Natural Gas	Treated Field Gas	1262	11794	103.3	0	0
ENG9	Natural Gas	Treated Field Gas	1262	11794	103.3	0	0
ENG10	Natural Gas	Treated Field Gas	1262	11794	103.3	0	0
ENG11	Natural Gas	Treated Field Gas	1262	11794	103.3	0	0
ENG12	Natural Gas	Treated Field Gas	1262	11794	103.3	0	0
FL1	Natural Gas	Treated Field Gas	1262	230	2.0	0	0
STAB1	Natural Gas	Treated Field Gas	1262	2773	24.3	0	0
STAB2	Natural Gas	Treated Field Gas	1262	2773	24.3	0	0
RB1	Natural Gas	Process Gas from Dehydrator	2585.7	357	3.1	0	0
RB2	Natural Gas	Process Gas from Dehydrator	2586	357	3.1	0	0
LH1	Natural Gas	Treated Field Gas	1262	792	6.9	0	0
FL2	Natural Gas	Treated Field Gas	1262	360	3.2	0	0

Unit No.	Fuel Type (low sulfur Diesel, ultra low sulfur diesel, Natural Gas, Coal, …)	Fuel Source: purchased commercial, pipeline quality natural gas, residue gas, raw/field natural gas, process gas (e.g. SRU tail gas) or other	Specify Units				
			Lower Heating Value	Hourly Usage (scf)	Annual Usage (MMscf)	% Sulfur	% Ash
FL3	Natural Gas	Treated Field Gas	1262	360	3.2	0	0
STAB3	Natural Gas	Treated Field Gas	1262	2773	24.3	0	0
RB3	Natural Gas	Process Gas from Dehydrator	2580	628	5.5	0	0
RB4	Natural Gas	Process Gas from Dehydrator	2580	628	5.5	0	0

Table 2-K: Liquid Data for Tanks Listed in Table 2-L

For each tank, list the liquid(s) to be stored in each tank. If it is expected that a tank may store a variety of hydrocarbon liquids, enter "mixed hydrocarbons" in the Composition column for that tank and enter the corresponding data of the most volatile liquid to be stored in the tank. If tank is to be used for storage of different materials, list all the materials in the "All Calculations" attachment, run the newest version of TANKS on each, and use the material with the highest emission rate to determine maximum uncontrolled and requested allowable emissions rate. The permit will specify the most volatile category of liquids that may be stored in each tank. Include appropriate tank-flashing modeling input data. Use additional sheets if necessary. Unit and stack numbering must correspond throughout the application package.

Tank No.	SCC Code	Material Name	Composition	Liquid Density (lb/gal)	Vapor Molecular Weight (lb/lb*mol)	Average Storage Conditions		Max Storage Conditions	
						Temperature (°F)	True Vapor Pressure (psia)	Temperature (°F)	True Vapor Pressure (psia)
OT1-OT4	40400311	Condensate	Condensate	6.28	52.12	98.75	11.70	108.77	13.28
OT5	40400311	Condensate	Condensate	6.03	50.67	97.51	11.97	107.64	13.53
ST1-ST2	40400311	Slop Oil/Water	Oily Water	6.33	47.35	109.97	8.02	120.10	8.99
WT1-WT8	40400315	Produced Water	Produced Water	8.22	28.26	109.83	11.12	119.96	12.30

Table 2-L: Tank Data

Include appropriate tank-flashing modeling input data. Use an addendum to this table for unlisted data categories. Unit and stack numbering must correspond throughout the application package. Use additional sheets if necessary. See reference Table 2-L2. Note: 1.00 bbl = 10.159 M3 = 42.0 gal

Tank No.	Date Installed	Materials Stored	Seal Type (refer to Table 2-LR below)	Roof Type (refer to Table 2-LR below)	Capacity (bbl)	Capacity (M3)	Diameter (M)	Vapor Space (M)	Color		Paint Condition (from Table VI-C)	Annual Throughput (gal/yr)	Turn-overs (per year)
									Roof	Shell			
OT1	2018	Condensate	N/A	FX	1,000	1,000	4.7	9.1	Green	Green	Good	68,984,910	1642.5
OT2	2018	Condensate	N/A	FX	1,000	1,000	4.7	9.1	Green	Green	Good	68,984,910	1642.5
OT3	2018	Condensate	N/A	FX	1,000	1,000	4.7	9.1	Green	Green	Good	68,984,910	1642.5
OT4	2018	Condensate	N/A	FX	1,000	1,000	4.7	9.1	Green	Green	Good	68,984,910	1642.5
OT5	2018	Off-Specification Condensate	N/A	FX	1,000	1,000	6.6	4.7	Green	Green	Good	9,095,520	216.6
GB1	2021	Produced Water/Condensate	N/A	FX	1,000	1,000	4.7	9.1	Green	Green	Good	233,331,710	5555.5
GB2	2021	Produced Water/Condensate	N/A	FX	1,000	1,000	4.7	9.1	Green	Green	Good	233,331,710	5555.5
ST1	2018	Slop Oil	N/A	FX	1,000	1,000	6.6	4.7	Green	Green	Good	1,945,193	46.3
ST2	2018	Slop Oil	N/A	FX	1,000	1,000	6.6	4.7	Green	Green	Good	1,945,193	46.3
WT1	2018	Produced Water	N/A	FX	1,000	1,000	6.6	4.7	Green	Green	Good	57,043,618	1358.2
WT2	2018	Produced Water	N/A	FX	1,000	1,000	6.6	4.7	Green	Green	Good	57,043,618	1358.2
WT3	2018	Produced Water	N/A	FX	1,000	1,000	6.6	4.7	Green	Green	Good	57,043,618	1358.2
WT4	2018	Produced Water	N/A	FX	1,000	1,000	6.6	4.7	Green	Green	Good	57,043,618	1358.2
WT5	2018	Produced Water	N/A	FX	1,000	1,000	6.6	4.7	Green	Green	Good	57,043,618	1358.2
WT6	2018	Produced Water	N/A	FX	1,000	1,000	6.6	4.7	Green	Green	Good	57,043,618	1358.2
WT7	2018	Produced Water	N/A	FX	1,000	1,000	6.6	4.7	Green	Green	Good	57,043,618	1358.2
WT8	2018	Produced Water	N/A	FX	1,000	1,000	6.6	4.7	Green	Green	Good	57,043,618	1358.2

Table 2-L2: Liquid Storage Tank Data Codes Reference Table

Roof Type	Seal Type, Welded Tank Seal Type		Seal Type, Riveted Tank Seal Type		Roof, Shell Color	Paint Condition
FX: Fixed Roof	**Mechanical Shoe Seal**	**Liquid-mounted resilient seal**	**Vapor-mounted resilient seal**	**Seal Type**	**WH**: White	Good
IF: Internal Floating Roof	**A**: Primary only	**A**: Primary only	**A**: Primary only	**A**: Mechanical shoe, primary only	**AS**: Aluminum (specular)	Poor
EF: External Floating Roof	**B**: Shoe-mounted secondary	**B**: Weather shield	**B**: Weather shield	**B**: Shoe-mounted secondary	**AD**: Aluminum (diffuse)	
P: Pressure	**C**: Rim-mounted secondary	**C**: Rim-mounted secondary	**C**: Rim-mounted secondary	**C**: Rim-mounted secondary	**LG**: Light Gray	
					MG: Medium Gray	
					BL: Black	
					OT: Other (specify)	

Note: 1.00 bbl = 0.159 M^3 = 42.0 gal

Table 2-M: Materials Processed and Produced (Use additional sheets as necessary.)

Material Processed				Material Produced			
Description	**Chemical Composition**	**Phase (Gas, Liquid, or Solid)**	**Quantity (specify units)**	**Description**	**Chemical Composition**	**Phase**	**Quantity (specify units)**
Natural Gas	Hydrocarbon Gas	Gas	120 MMSCFD	Natural Gas	Hydrocarbon Gas	Gas	120 MMSCFD
Oil (Oil Inlet)	Hydrocarbon Liquids	Liquid	18503 BOPD	Oil (Tank Throughput)	Hydrocarbon Liquids	Liquid	18503 BOPD
Produced Water (Inlet to GB)	Hydrocarbon Liquids	Liquid	30068 BWPD	Produced Water (Inlet to GB)	Hydrocarbon Liquids	Liquid	30068 BWPD

Table 2-N: CEM Equipment

Enter Continuous Emissions Measurement (CEM) Data in this table. If CEM data will be used as part of a federally enforceable permit condition, or used to satisfy the requirements of a state or federal regulation, include a copy of the CEM's manufacturer specification sheet in the Information Used to Determine Emissions attachment. Unit and stack numbering must correspond throughout the application package. Use additional sheets if necessary.

Stack No.	Pollutant(s)	Manufacturer	Model No.	Serial No.	Sample Frequency	Averaging Time	Range	Sensitivity	Accuracy
	Not applicable								

Table 2-O: Parametric Emissions Measurement Equipment

Unit and stack numbering must correspond throughout the application package. Use additional sheets if necessary.

Unit No.	Parameter/Pollutant Measured	Location of Measurement	Unit of Measure	Acceptable Range	Frequency of Maintenance	Nature of Maintenance	Method of Recording	Averaging Time
	Not applicable							

Table 2-P: Greenhouse Gas Emissions

Applications submitted under 20.2.70, 20.2.72, & 20.2.74 NMAC are required to complete this Table. Power plants, Title V major sources, and PSD major sources must report and calculate all GHG emissions for each unit. Applicants must report potential emission rates in short tons per year (see Section 6.a for assistance). Include GHG emissions during Startup, Shutdown, and Scheduled Maintenance in this table. For minor source facilities that are not power plants, are not Title V, or are not PSD, there are three options for reporting GHGs 1) report GHGs for each individual piece of equipment; 2) report all GHGs from a group of unit types, for example report all combustion source GHGs as a single unit and all venting GHG as a second separate unit; OR 3) check the following box ☑ By checking this box, the applicant acknowledges the total CO2e emissions are less than 75,000 tons per year.

		CO_2 ton/yr	N_2O ton/yr	CH_4 ton/yr	SF_6 ton/yr	PFC/HFC ton/yr[2]									Total GHG Mass Basis ton/yr[4]	Total CO_2e ton/yr[5]
Unit No.	**GWPs [1]**	**1**	**298**	**25**	**22,800**	**footnote 3**										
ENG1	**mass GHG**	8237.99	0.01	0.14											8238	
	CO_2e	8237.99	4.28	3.59												8246
ENG2	**mass GHG**	8237.99	0.01	0.14											8238	
	CO_2e	8237.99	4.28	3.59												8246
ENG3	**mass GHG**	8237.99	0.01	0.14											8238	
	CO_2e	8237.99	4.28	3.59												8246
ENG4	**mass GHG**	8237.99	0.01	0.14											8238	
	CO_2e	8237.99	4.28	3.59												8246
ENG5	**mass GHG**	8237.99	4.28	0.14											8242	
	CO_2e	8237.99	4.28	3.59												8246
ENG6	**mass GHG**	8237.99	4.28	0.14											8242	
	CO_2e	8237.99	4.28	3.59												8246
ENG7	**mass GHG**	8237.99	4.28	0.14											8242	
	CO_2e	8237.99	4.28	3.59												8246
ENG8	**mass GHG**	8237.99	4.28	0.14											8242	
	CO_2e	8237.99	4.28	3.59												8246
ENG9	**mass GHG**	8237.99	4.28	0.14											8242	
	CO_2e	8237.99	4.28	3.59												8246
ENG10	**mass GHG**	8237.99	4.28	0.14											8242	
	CO_2e	8237.99	4.28	3.59												8246
ENG11	**mass GHG**	8237.99	4.28	0.14											8242	
	CO_2e	8237.99	4.28	3.59												8246
ENG12	**mass GHG**	8237.99	4.28	0.14											8242	
	CO_2e	8237.99	4.28	3.59												8246
FL1 (Pilot)	**mass GHG**	148.75	-	0.00											149	
	CO_2e	148.75	-	0.06												149
FL1	**mass GHG**	4734.12	-	19.75											4754	
	CO_2e	4734.12	-	493.68												5228
FL2 (Pilot)	**mass GHG**	232.82	-	0.00											233	
	CO_2e	232.82	-	0.10												233
FL3 (Pilot)	**mass GHG**	232.82	-	0.00											233	
	CO_2e	232.82	-	0.10												233
FL2/ FL3	**mass GHG**	2070.12	-	1.43											2072	
	CO_2e	2070.12	-	35.64												2106
STAB1	**mass GHG**	1793.57	0.00	0.03											1794	
	CO_2e	1793.57	1.01	0.85												1795

Table 2-P: Greenhouse Gas Emissions

Applications submitted under 20.2.70, 20.2.72, & 20.2.74 NMAC are required to complete this Table. Power plants, Title V major sources, and PSD major sources must report and calculate all GHG emissions for each unit. Applicants must report potential emission rates in short tons per year (see Section 6.a for assistance). Include GHG emissions during Startup, Shutdown, and Scheduled Maintenance in this table. For minor source facilities that are not power plants, are not Title V, or are not PSD, there are three options for reporting GHGs 1) report GHGs for each individual piece of equipment; 2) report all GHGs from a group of unit types, for example report all combustion source GHGs as a single unit and all venting GHG as a second separate unit; OR 3) check the following box ☑ By checking this box, the applicant acknowledges the total CO2e emissions are less than 75,000 tons per year.

		CO_2 ton/yr	N_2O ton/yr	CH_4 ton/yr	SF_6 ton/yr	PFC/HFC ton/yr[2]									Total GHG Mass Basis ton/yr[4]	Total CO_2e ton/yr[5]
Unit No.	**GWPs [1]**	**1**	**298**	**25**	**22,800**	**footnote 3**										
STAB2	**mass GHG**	1793.57	0.00	0.03											1794	
	CO_2e	1793.57	1.01	0.85												1795
STAB3	**mass GHG**	1793.57	0.00	0.03											1794	
	CO2e	1793.57	1.01	0.85												1795
FUG	**mass GHG**	-	-	17.63											18	
	CO_2e	-	-	440.71												441
RB1	**mass GHG**	256.22	0.00	0.00											256	
	CO2e	256.22	0.14	0.12												256
RB2	**mass GHG**	256.22	0.00	0.00											256	
	CO_2e	256.22	0.14	0.12												256
RB3	**mass GHG**	384.34	0.00	0.01											384	
	CO2e	384.34	0.22	0.18												385
RB4	**mass GHG**	384.34	0.00	0.01											384	
	CO_2e	384.34	0.22	0.18												385
DEHY1	**mass GHG**	0.99	-	0.61											2	
	CO2e	0.99	-	15.29												16
DEHY2	**mass GHG**	0.99	-	0.61											2	
	CO_2e	0.99	-	15.29												16
DEHY3	**mass GHG**	0.03	-	1.08											1	
	CO2e	0.03	-	27.01												27
DEHY4	**mass GHG**	0.03	-	1.08											1	
	CO_2e	0.03	-	27.01												27
LH1	**mass GHG**	512.45	0.00	0.01											512	
	CO2e	512.45	0.29	0.24												513
Total	**mass GHG**														105291	
	CO_2e															114608

[1] **GWP** (Global Warming Potential): Applicants must use the most current GWPs codified in Table A-1 of 40 CFR part 98. GWPs are subject to change, therefore, applicants need to check 40 CFR 98 to confirm GWP values.

[2] For **HFCs** or **PFCs** describe the specific HFC or PFC compound and use a separate column for each individual compound.

[3] For each new compound, enter the appropriate GWP for each HFC or PFC compound from Table A-1 in 40 CFR 98.

[4] Green house gas emissions on a **mass basis** is the ton per year green house gas emission before adjustment with its GWP.

[5] **CO_2e** means Carbon Dioxide Equivalent and is calculated by multiplying the TPY mass emissions of the green house gas by its GWP.

Section 3

Application Summary

Section 3

Application Summary

The **Application Summary** shall include a brief description of the facility and its process, the type of permit application, the applicable regulation (i.e. 20.2.72.200.A.X, or 20.2.73 NMAC) under which the application is being submitted, and any air quality permit numbers associated with this site. If this facility is to be collocated with another facility, provide details of the other facility including permit number(s). In case of a revision or modification to a facility, provide the lowest level regulatory citation (i.e. 20.2.72.219.B.1.d NMAC) under which the revision or modification is being requested. Also describe the proposed changes from the original permit, how the proposed modification will affect the facility's operations and emissions, de-bottlenecking impacts, and changes to the facility's major/minor status (both PSD & Title V).

The **Process Summary** shall include a brief description of the facility and its processes.

Startup, Shutdown, and Maintenance (SSM) routine or predictable emissions: Provide an overview of how SSM emissions are accounted for in this application. Refer to "Guidance for Submittal of Startup, Shutdown, Maintenance Emissions in Permit Applications (http://www.env.nm.gov/aqb/permit/app_form.html) for more detailed instructions on SSM emissions.

This application serves as the initial Title V Operating Permit application and is submitted in accordance with 20.2.70 NMAC.

Oil, gas, and water flow separately into the site. Gas is dehydrated then reinjected for gas lift or compressed to the sales line. Oil is stabilized then temporarily stored in tanks before being sold via pipeline. Water is processed, then temporarily stored before being shipped offsite via pipeline. A detailed process description is provided in Section 10.

Emissions associated with low pressure compressor or VRU downtime are represented at FL-2 and FL-3 and included with normal operations. Emissions associated with engine maintenance (blowdown and starter vents) are routed to FL-1 and included with SSM emissions. Ten (10) tons of VOC emissions related to miscellaneous SSM activities and ten (10) tons related to malfunctions are also included.

Section 4

Process Flow Sheet

Section 4

Process Flow Sheet

A **process flow sheet** and/or block diagram indicating the individual equipment, all emission points and types of control applied to those points. The unit numbering system should be consistent throughout this application.

A process flow sheet is provided.

Zia Hills Central Facility
Process Flow Diagram

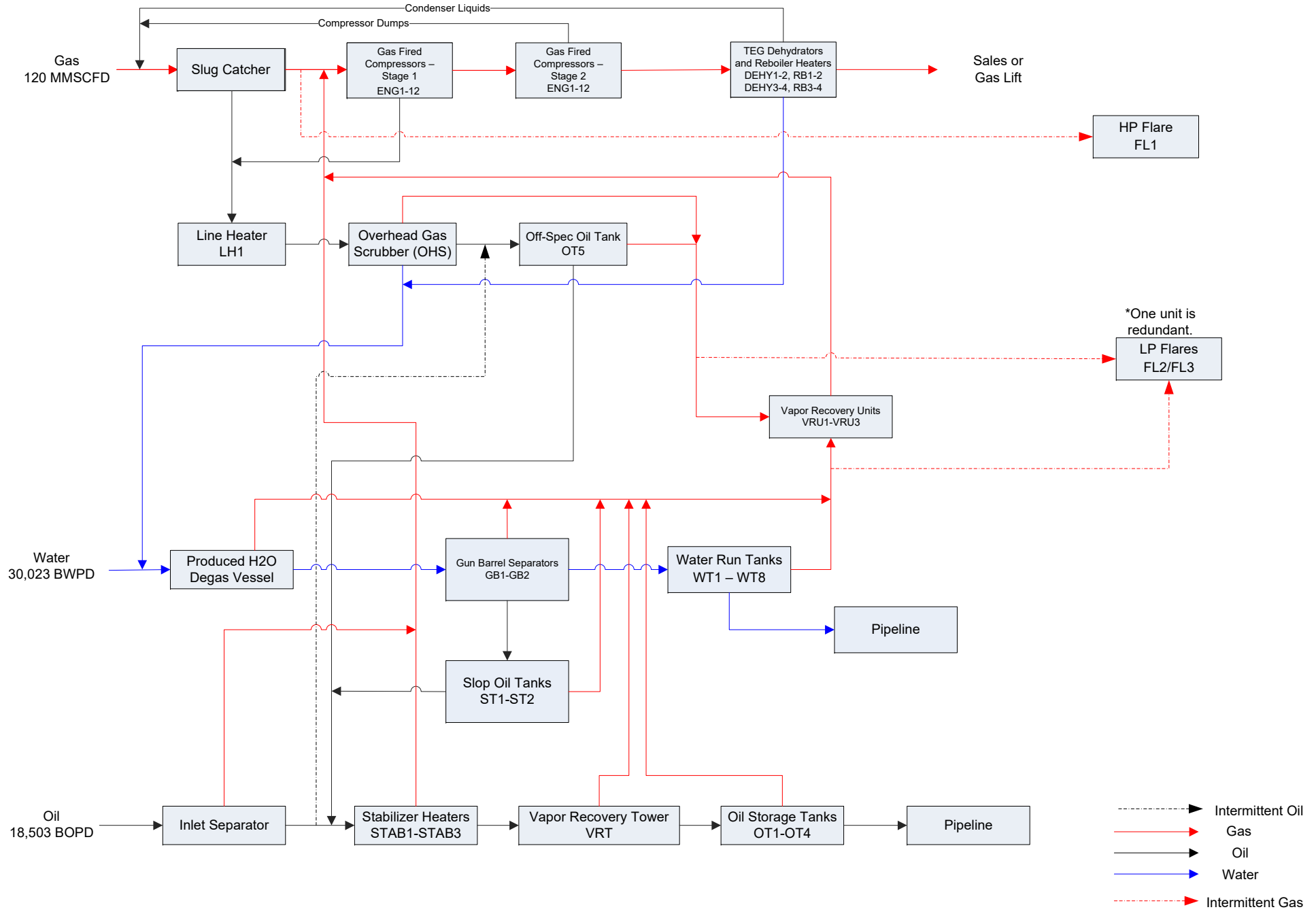

Section 5

Plot Plan

Section 5

Plot Plan Drawn To Scale

A **plot plan drawn to scale** showing emissions points, roads, structures, tanks, and fences of property owned, leased, or under direct control of the applicant. This plot plan must clearly designate the restricted area as defined in UA1, Section 1-D.12. The unit numbering system should be consistent throughout this application.

A plot plan is provided.

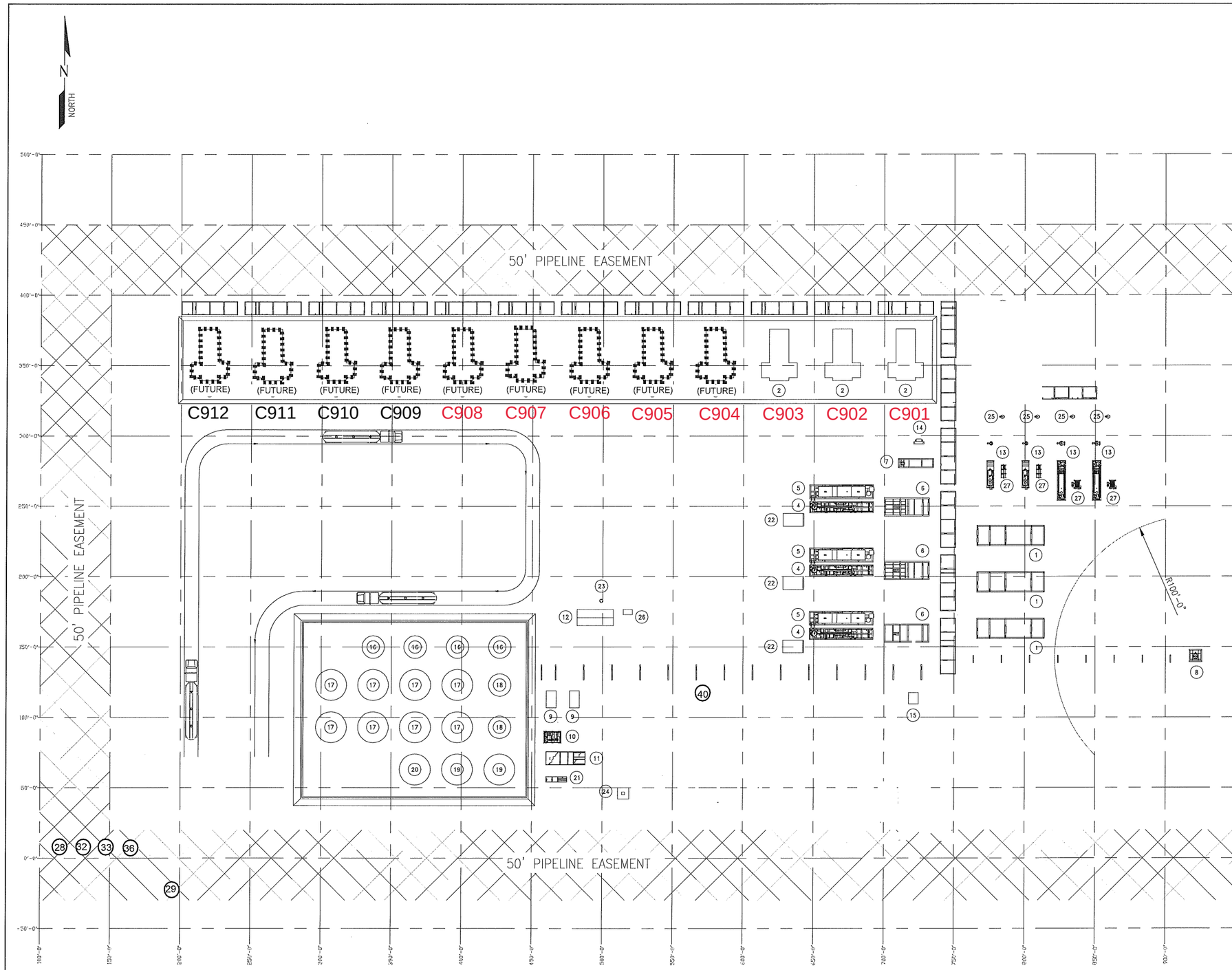

INSTALLED EQUIPMENT LIST	
MARK	DESCRIPTION
1	ZZZ-101, ZZZ-111, ZZZ-121 - INLET SLUG CATCHER PACKAGE
2	ZZZ-901 THRU ZZZ-903- INLET GAS COMPRESSOR
3	ZZZ-710 STABILIZER OVERHEAD COMPRESSOR PACKAGE
4	ZZZ-402A, ZZZ-412A, ZZZ-422A - STABILIZER TOWER SKID
5	ZZZ-402B, ZZZ-412B, ZZZ-422B - STABILIZER PACKAGE
6	ZZZ-401, ZZZ-411, ZZZ-421 -INLET SEPARATOR PACKAGE
7	ZZZ-4000 - FUEL GAS SKID
8	F-700 - FLARE
9	ZZZ-1000, ZZZ-1100 - LACT UNITS
10	ZZZ-720 - VRU
11	ZZZ-500 - WATER PUMP PACKAGE
12	ELECTRICAL SWITCH RACK / RTU
13	DEHY UNITS ZZZ-440, ZZZ-450, ZZZ-460, ZZZ-470
14	AC-710 STABILIZER OVERHEAD GAS AIR COOLER
15	ZZZ-800 - INSTRUMENT AIR PACKAGE
16	TK-2100 THRU TK-2400 - STABILIZED OIL STORAGE TANK
17	TK-2000 THRU TK-2070 - WATER STORAGE TANK
18	TK-3000, TK-3100 - GUN BARREL TANK
19	TK-2500, TK-2600 - CONDENSATE STORAGE TANK
20	TK-2700 - OFF SPEC STORAGE TANK
21	ZZZ-520 - TRANSFER PUMP SKID
22	AC-405, AC-415, AC-425 - STABILIZED CONDENSATE AMBIENT AIR COOLER
23	TECOMM TOWER
24	ELECTRICAL POWER TRANSFORMER
25	F-200, F-210, F-220, F-230 COMPRESSOR DISCHARGE COALESCING FILTERS
26	JOB BOX
27	ZZZ-441, ZZZ-451, ZZZ-461, ZZZ-471 BTEX UNITS
28	GAS IN - TIE POINT
29	GAS IN - TIE POINT
31	GAS OUT - TIE POINT
32	LIFT GAS OUT - TIE POINT
33	OIL IN - TIE POINT
36	WATER IN - TIE POINT
39	WATER OUT - TIE POINT
40	OIL OUT - TIE POINT

NOTICE

THIS DRAWING IS THE PROPERTY OF CONOCOPHILLIPS CORPORATION AND IS LENT TO THE BORROWER FOR HIS CONFIDENTIAL USE ONLY, AND IS SUBJECT TO RETURN UPON REQUEST AND SHALL NOT BE REPRODUCED, COPIED, LENT OR OTHERWISE DISPOSED OF DIRECTLY OR INDIRECTLY, NOR USED FOR ANY PURPOSE OTHER THAN THAT FOR WHICH IT IS SPECIFICALLY FURNISHED.

DWG. NO.	REFERENCE DRAWINGS	NO.	DATE	REVISIONS	BY	CK'D	APP	DATE	APP	DATE
		0	10/19/17	IFC	ATM	GA				

NOTES

SNC·LAVALIN

ENGINEERING RECORD	DATE
DRN:	
CHK:	
APP:	
APP:	
W.O. No.:	
SCALE: AS NOTED	

ConocoPhillips

MCBU, PERMIAN
MIDLAND, TEXAS

ZIA HILLS CENTRAL FACILITY
PLOT PLAN

DWG. No. PRM-S0822-00-020-0001

REV 0

Section 6

All Calculations

Section 6

All Calculations

Show all calculations used to determine both the hourly and annual controlled and uncontrolled emission rates. All calculations shall be performed keeping a minimum of three significant figures. Document the source of each emission factor used (if an emission rate is carried forward and not revised, then a statement to that effect is required). If identical units are being permitted and will be subject to the same operating conditions, submit calculations for only one unit and a note specifying what other units to which the calculations apply. All formulas and calculations used to calculate emissions must be submitted. The "Calculations" tab in the UA2 has been provided to allow calculations to be linked to the emissions tables. Add additional "Calc" tabs as needed. If the UA2 or other spread sheets are used, all calculation spread sheet(s) shall be submitted electronically in Microsoft Excel compatible format so that formulas and input values can be checked. Format all spread sheets and calculations such that the reviewer can follow the logic and verify the input values. Define all variables. If calculation spread sheets are not used, provide the original formulas with defined variables. Additionally, provide subsequent formulas showing the input values for each variable in the formula. All calculations, including those calculations are imbedded in the Calc tab of the UA2 portion of the application, the printed Calc tab(s), should be submitted under this section.

Tank Flashing Calculations: The information provided to the AQB shall include a discussion of the method used to estimate tank-flashing emissions, relative thresholds (i.e., NOI, permit, or major source (NSPS, PSD or Title V)), accuracy of the model, the input and output from simulation models and software, all calculations, documentation of any assumptions used, descriptions of sampling methods and conditions, copies of any lab sample analysis. If Hysis is used, all relevant input parameters shall be reported, including separator pressure, gas throughput, and all other relevant parameters necessary for flashing calculation.

SSM Calculations: It is the applicant's responsibility to provide an estimate of SSM emissions or to provide justification for not doing so. In this Section, provide emissions calculations for Startup, Shutdown, and Routine Maintenance (SSM) emissions listed in the Section 2 SSM and/or Section 22 GHG Tables and the rational for why the others are reported as zero (or left blank in the SSM/GHG Tables). Refer to "Guidance for Submittal of Startup, Shutdown, Maintenance Emissions in Permit Applications (http://www.env.nm.gov/aqb/permit/app_form.html) for more detailed instructions on calculating SSM emissions. If SSM emissions are greater than those reported in the Section 2, Requested Allowables Table, modeling may be required to ensure compliance with the standards whether the application is NSR or Title V. Refer to the Modeling Section of this application for more guidance on modeling requirements.

Glycol Dehydrator Calculations: The information provided to the AQB shall include the manufacturer's maximum design recirculation rate for the glycol pump. If GRI-Glycalc is used, the full input summary report shall be included as well as a copy of the gas analysis that was used.

Road Calculations: Calculate fugitive particulate emissions and enter haul road fugitives in Tables 2-A, 2-D and 2-E for:

1. If you transport raw material, process material and/or product into or out of or within the facility and have PER emissions greater than 0.5 tpy.
2. If you transport raw material, process material and/or product into or out of the facility more frequently than one round trip per day.

Significant Figures:
A. All emissions standards are deemed to have at least two significant figures, but not more than three significant figures.
B. At least 5 significant figures shall be retained in all intermediate calculations.
C. In calculating emissions to determine compliance with an emission standard, the following rounding off procedures shall be used:

(1) If the first digit to be discarded is less than the number 5, the last digit retained shall not be changed;
(2) If the first digit discarded is greater than the number 5, or if it is the number 5 followed by at least one digit other than the number zero, the last figure retained shall be increased by one unit; **and**
(3) If the first digit discarded is exactly the number 5, followed only by zeros, the last digit retained shall be rounded upward if it is an odd number, but no adjustment shall be made if it is an even number.
(4) The final result of the calculation shall be expressed in the units of the standard.

Control Devices: In accordance with 20.2.72.203.A(3) and (8) NMAC, 20.2.70.300.D(5)(b) and (e) NMAC, and 20.2.73.200.B(7) NMAC, the permittee shall report all control devices and list each pollutant controlled by the control device

regardless if the applicant takes credit for the reduction in emissions. The applicant can indicate in this section of the application if they chose to not take credit for the reduction in emission rates. For notices of intent submitted under 20.2.73 NMAC, only uncontrolled emission rates can be considered to determine applicability unless the state or federal Acts require the control. This information is necessary to determine if federally enforceable conditions are necessary for the control device, and/or if the control device produces its own regulated pollutants or increases emission rates of other pollutants.

Heater (LH1)
Emission rates for NOx, CO, VOC, PM, and HAP were calculated using AP-42 factors for external natural gas combustion sources, Table 1.4-1 and 1.4-2. PM_{10} and $PM_{2.5}$ emissions are set equal to PM emissions as a conservative measure. SO_2 emissions were calculated based on the units' fuel consumption and a maximum sulfur content of 5 gr/100 scf.

Stabilizer Heaters (STAB1-STAB3)
Stabilizer heater combustion emissions for NOx, CO, VOC, PM, and HAP were calculated using AP-42 factors for external natural gas combustion sources, Table 1.4-1 and 1.4-2. PM_{10} and $PM_{2.5}$ emissions are set equal to PM emissions as a conservative measure. SO_2 emissions were calculated based on the units' fuel consumption and a maximum sulfur content of 5 gr/100 scf. Note that only two of the stabilizers will be operated at any given time.

Oil Storage Tanks (OT1-OT4)
Flashing, working and breathing losses were estimated using Promax, assuming a maximum hourly throughput of based on a production rate of 18,503 BOPD. VRU1-VRU3 are used to capture tank vapors. During VRU downtime (263 hours), flares (FL2/FL3) with a control efficiency of 98% are used to reduce tank emissions. Oil is piped offsite.

Slop Oil Storage Tanks (ST1-ST2)
Flashing, working and breathing losses were estimated using Promax, assuming a throughput of 254 BOPD. VRU1-VRU3 are used to capture tank vapors. During VRU downtime (263 hours), flares (FL2/FL3) with a control efficiency of 98% are used to reduce tank emissions. Oil is routed to the inlet of the stabilizers.

Off-Specification Oil Storage Tank (OT5)
Flashing, working, and breathing losses were estimated using Promax. COP assumed a throughput of 593 BOPD per tank. VRU1-VRU3 are used to capture tank vapors. During VRU downtime (263 hours), flares (FL2/FL3) with a control efficiency of 98% are used to reduce tank emissions. Oil is returned to the stabilizers for further treatment.

Gun Barrel Separators (GB1-GB2)
Flashing and working and breathing emissions from the oil storage tanks were estimated using Promax, assuming a throughput of 30,023 BWPD. VRU1-VRU3 are used to capture tank vapors. During VRU downtime (263 hours), flares (FL2/FL3) with a control efficiency of 98% are used to reduce tank emissions. Water then flows to the water tanks, while any residual oil flows to ST1-ST2.

Water Tanks (WT1-WT8)
Working and breathing losses from all tanks were estimated using Promax, assuming a throughput of 30,023 BWPD. Flashing occurs in the gun barrel separators. VRU1-VRU3 are used to capture tank vapors. During VRU downtime (263 hours), flares (FL2/FL3) with a control efficiency of 98% are used to reduce tank emissions. Water is piped offsite.

High Pressure Flare (FL1)
The flare uses a continuously lit pilot. Emission rates for NO_x and CO are calculated using factors from TNRCC. H_2S, SO_2 and VOC emissions were calculated based on the gas analysis. Emission rates for NO_x and CO are calculated using factors from TNRCC. H_2S, SO_2 and VOC emissions were calculated based on the gas analysis. A VOC control efficiency of 98% was used.

Low Pressure Flares (FL2/FL3)
This is a redundant flare system. The flares use a continuously lit pilot. Emission rates for NO_x and CO are calculated using factors from TNRCC. H_2S, SO_2 and VOC emissions were calculated based on the gas analysis. Emission rates for NO_x and CO are calculated using factors from TNRCC. H_2S, SO_2 and VOC emissions were calculated based on the gas analysis. A VOC control efficiency of 98% was used.

Fugitives (FUG)
Fugitives for the facility were calculated in EPA/API average emission factors.

Compressor Engines (ENG1-ENG12)
Emission factors used for the engines are a combination of manufacturer's data and AP-42 Section 3.2 emission factors. SO_2 emissions were calculated based on the units' fuel consumption and a maximum sulfur content of 5 grains per 100 standard cubic feet (5 gr/100 scf).

Triethylene Glycol Dehydrators (DEHY1-DEHY4, RB1-RB4)
There are two (2) dehydrators processing approximately 21 MMscfd (DEHY1-DEHY2) each and two (2) dehydrators processing approximately 41 MMscfd (DEHY3-DEHY4). The dehydrators utilize flash tanks and condensers to minimize emissions. Flash tank vapors and any vapors remaining after the condenser are used as fuel in the glycol regeneration heaters (RB1-RB4). Emissions were estimated using Promax.

Emission rates for NOx, CO, VOC, PM, and HAP from RB1-RB4 were calculated using AP-42 factors for external natural gas combustion sources, Table 1.4-1 and 1.4-2. PM_{10} and $PM_{2.5}$ emissions are set equal to PM emissions as a conservative measure. SO_2 emissions were calculated based on the units' fuel consumption and a maximum sulfur content of 5 gr/100 scf. Emissions were conservatively based on the assumption the higher Btu gas from the condenser was burned 8,760 hours per year.

Section 6.a

Green House Gas Emissions

(Submitting under 20.2.70, 20.2.72 20.2.74 NMAC)

Title V (20.2.70 NMAC), Minor NSR (20.2.72 NMAC), and PSD (20.2.74 NMAC) applicants must estimate and report greenhouse gas (GHG) emissions to verify the emission rates reported in the public notice, determine applicability to 40 CFR 60 Subparts, and to evaluate Prevention of Significant Deterioration (PSD) applicability. GHG emissions that are subject to air permit regulations consist of the sum of an aggregate group of these six greenhouse gases: carbon dioxide (CO_2), nitrous oxide (N_2O), methane (CH_4), hydrofluorocarbons (HFCs), perfluorocarbons (PFCs), and sulfur hexafluoride (SF_6).

Calculating GHG Emissions:

1. Calculate the ton per year (tpy) GHG mass emissions and GHG CO_2e emissions from your facility.
2. GHG mass emissions are the sum of the total annual tons of greenhouse gases without adjusting with the global warming potentials (GWPs). GHG CO_2e emissions are the sum of the mass emissions of each individual GHG multiplied by its GWP found in Table A-1 in 40 CFR 98 Mandatory Greenhouse Gas Reporting.
3. Emissions from routine or predictable start up, shut down, and maintenance must be included.
4. Report GHG mass and GHG CO_2e emissions in Table 2-P of this application. Emissions are reported in **short** tons per year and represent each emission unit's Potential to Emit (PTE).
5. All Title V major sources, PSD major sources, and all power plants, whether major or not, must calculate and report GHG mass and CO2e emissions for each unit in Table 2-P.
6. For minor source facilities that are not power plants, are not Title V, and are not PSD there are three options for reporting GHGs in Table 2-P: 1) report GHGs for each individual piece of equipment; 2) report all GHGs from a group of unit types, for example report all combustion source GHGs as a single unit and all venting GHGs as a second separate unit; 3) or check the following ☐ By checking this box, the applicant acknowledges the total CO2e emissions are less than 75,000 tons per year.

Sources for Calculating GHG Emissions:

- Manufacturer's Data
- AP-42 Compilation of Air Pollutant Emission Factors at http://www.epa.gov/ttn/chief/ap42/index.html
- EPA's Internet emission factor database WebFIRE at http://cfpub.epa.gov/webfire/
- 40 CFR 98 Mandatory Green House Gas Reporting except that tons should be reported in short tons rather than in metric tons for the purpose of PSD applicability.
- API Compendium of Greenhouse Gas Emissions Methodologies for the Oil and Natural Gas Industry. August 2009 or most recent version.
- Sources listed on EPA's NSR Resources for Estimating GHG Emissions at http://www.epa.gov/nsr/clean-air-act-permitting-greenhouse-gases:

Global Warming Potentials (GWP):
Applicants must use the Global Warming Potentials codified in Table A-1 of the most recent version of 40 CFR 98 Mandatory Greenhouse Gas Reporting. The GWP for a particular GHG is the ratio of heat trapped by one unit mass of the GHG to that of one unit mass of CO_2 over a specified time period.

"Greenhouse gas" for the purpose of air permit regulations is defined as the aggregate group of the following six gases: carbon dioxide, nitrous oxide, methane, hydrofluorocarbons, perfluorocarbons, and sulfur hexafluoride. **(20.2.70.7 NMAC, 20.2.74.7 NMAC).** You may also find GHGs defined in 40 CFR 86.1818-12(a).

Metric to Short Ton Conversion:
Short tons for GHGs and other regulated pollutants are the standard unit of measure for PSD and title V permitting programs. 40 CFR 98 Mandatory Greenhouse Reporting requires metric tons.
1 metric ton = 1.10231 short tons (per Table A-2 to Subpart A of Part 98 – Units of Measure Conversions)

- GHG emissions are provided.

CONOCOPHILLIPS COMPANY

ZIA HILLS CENTRAL FACILITY

Facility Emissions Summary

SOURCE DESCRIPTION	UNIT NUMBER	STACK NUMBER	NOx		CO		VOC (INCLUDES HAPs)		SO_2		$PM_{10 \& 2.5}$		HAPs		CO2e
			lb/hr	TPY	lb/hr	TPY	lb/hr	TPY	lb/hr	TPY	lb/hr	TPY	lb/hr	TPY	TPY
CATERPILLAR 3606A4 ULB ENGINE	ENG1	ENG1	1.24	5.43	2.48	10.86	3.24	14.21	0.17	0.74	0.15	0.65	0.35	1.54	8,246
CATERPILLAR 3606A4 ULB ENGINE	ENG2	ENG2	1.24	5.43	2.48	10.86	3.24	14.21	0.17	0.74	0.15	0.65	0.35	1.54	8,246
CATERPILLAR 3606A4 ULB ENGINE	ENG3	ENG3	1.24	5.43	2.48	10.86	3.24	14.21	0.17	0.74	0.15	0.65	0.35	1.54	8,246
CATERPILLAR 3606A4 ULB ENGINE	ENG4	ENG4	1.24	5.43	2.48	10.86	3.24	14.21	0.17	0.74	0.15	0.65	0.35	1.54	8,246
CATERPILLAR 3606A4 ULB ENGINE	ENG5	ENG5	1.24	5.43	2.48	10.86	3.24	14.21	0.17	0.74	0.15	0.65	0.35	1.54	8,246
CATERPILLAR 3606A4 ULB ENGINE	ENG6	ENG6	1.24	5.43	2.48	10.86	3.24	14.21	0.17	0.74	0.15	0.65	0.35	1.54	8,246
CATERPILLAR 3606A4 ULB ENGINE	ENG7	ENG7	1.24	5.43	2.48	10.86	3.24	14.21	0.17	0.74	0.15	0.65	0.35	1.54	8,246
CATERPILLAR 3606A4 ULB ENGINE	ENG8	ENG8	1.24	5.43	2.48	10.86	3.24	14.21	0.17	0.74	0.15	0.65	0.35	1.54	8,246
CATERPILLAR 3606A4 ULB ENGINE	ENG9	ENG9	1.24	5.43	2.48	10.86	3.24	14.21	0.17	0.74	0.15	0.65	0.35	1.54	8,246
CATERPILLAR 3606A4 ULB ENGINE	ENG10	ENG10	1.24	5.43	2.48	10.86	3.24	14.21	0.17	0.74	0.15	0.65	0.35	1.54	8,246
CATERPILLAR 3606A4 ULB ENGINE	ENG11	ENG11	1.24	5.43	2.48	10.86	3.24	14.21	0.17	0.74	0.15	0.65	0.35	1.54	8,246
CATERPILLAR 3606A4 ULB ENGINE	ENG12	ENG12	1.24	5.43	2.48	10.86	3.24	14.21	0.17	0.74	0.15	0.65	0.35	1.54	8,246
FLARE 1: INLET GAS GAS (INCLUDING PILOT AND INTERMITTENT GAS)	FL1	FL1	199.22	6.37	397.71	12.72	309.36	9.91	0.00	0.01	8.55	0.27	6.48	0.21	5,377
CONDENSATE STORAGE TANKS: 1000 BBL	OT1-OT4	FL2/FL3	Emissions represented at FL2/FL3.												
OFF-SPECIFICATION CONDENSATE TANK	OT5	FL2/FL3	Emissions represented at FL2/FL3.												
GUN BARREL SEPARATORS: 1000 BBL	GB1-GB2	FL2/FL3	Emissions represented at FL2/FL3.												
PRODUCED WATER TANKS: 1000 BBL	WT1-WT8	FL2/FL3	Emissions represented at FL2/FL3.												
SLOP OIL TANKS: 1000 BBL	ST1-ST2	FL2/FL3	Emissions represented at FL2/FL3.												
OVERHEAD GAS SCRUBBER	OSH1	FL2/FL3	Emissions represented at FL2/FL3.												
WATER DEGAS VESSEL	WDGV1	FL2/FL3	Emissions represented at FL2/FL3.												
FLARE 2: LP GAS (INCLUDING PILOT AND INTERMITTENT GAS)	FL2	FL2	14.24	1.79	28.43	3.56	67.66	7.70	0.00	0.02	0.36	0.04	2.22	0.24	2,339
FLARE 3: LP GAS (PILOT ONLY) - REDUNDANT FOR FLARE 2	FL3	FL3	0.06	0.27	0.13	0.55	0.10	0.44	0.00	0.02	0.00	0.00	0.00	0.01	233
STABILIZER HEATER (3.5 MMBTU/HR)	STAB1	STAB1	0.42	1.86	0.36	1.56	0.02	0.10	0.00	0.01	0.03	0.14	0.01	0.03	1,795
STABILIZER HEATER (3.5 MMBTU/HR)	STAB2	STAB2	0.42	1.86	0.36	1.56	0.02	0.10	0.00	0.01	0.03	0.14	0.01	0.03	1,795
STABILIZER HEATER (3.5 MMBTU/HR)	STAB3	STAB3	0.42	1.86	0.36	1.56	0.02	0.10	0.00	0.01	0.03	0.14	0.01	0.03	1,795
TRIETHYLENE GLYCOL DEHYDRATOR[2]	DEHY1	RB1	---	---	---	---	0.34	1.47	---	---	---	---	0.03	0.15	16
GLYCOL REGENERATOR (0.5 MMBTU/HR)	RB1	RB1	0.12	0.54	0.10	0.46	0.01	0.03	0.00	0.00	0.01	0.04	0.00	0.01	256
TRIETHYLENE GLYCOL DEHYDRATOR[2]	DEHY2	RB2	---	---	---	---	0.34	1.47	---	---	---	---	0.03	0.15	16
GLYCOL REGENERATOR (0.5 MMBTU/HR)	RB2	RB2	0.12	0.54	0.10	0.46	0.01	0.03	0.00	0.00	0.01	0.04	0.00	0.01	256
TRIETHYLENE GLYCOL DEHYDRATOR[2]	DEHY3	RB3	---	---	---	---	0.59	2.58	---	---	---	---	0.06	0.26	27
GLYCOL REGENERATOR (0.75 MMBTU/HR)	RB3	RB3	0.19	0.81	0.16	0.68	0.01	0.04	0.00	0.00	0.01	0.06	0.00	0.01	385
TRIETHYLENE GLYCOL DEHYDRATOR[2]	DEHY4	RB4	---	---	---	---	0.59	2.58	---	---	---	---	0.06	0.26	27
GLYCOL REGENERATOR (0.75 MMBTU/HR)	RB4	RB4	0.19	0.81	0.16	0.68	0.01	0.04	0.00	0.00	0.01	0.06	0.00	0.01	385
LINE HEATER (1.0 MMBTU/HR)	LH1	LH1	0.12	0.53	0.10	0.45	0.01	0.03	0.00	0.00	0.01	0.04	0.00	0.01	513
FUGITIVE EMISSIONS: EQUIPMENT LEAKS	FUGITIVES	FUGITIVES	---	---	---	---	3.13	13.70	---	---	---	---	0.09	0.39	441
SSM VENTING ACTIVITIES	SSM	SSM	---	---	---	---	397.87	9.81	---	---	---	---	41.30	0.53	---
MALFUNCTIONS	MF	MF	---	---	---	---	---	10.00	---	---	---	---	---	---	---

FACILITY EMISSIONS	NOx		CO		VOC (INCLUDES HAPs)		SO_2		$PM_{10 \& 2.5}$		HAPs		CO_2e
	lb/hr	TPY	lb/hr	TPY	lb/hr	TPY	lb/hr	TPY	lb/hr	TPY	lb/hr	TPY	TPY
	230.41	**82.44**	**457.72**	**154.61**	**819.01**	**230.65**	**2.04**	**8.95**	**10.84**	**8.73**	**54.51**	**20.76**	**114,608**

1 A "---" symbol indicates the pollutant is not accounted for using the AECT or not emitted.
2 Any vapors remaining from dehydration following the condenser are burned in the reboiler. VOC emissions are illustrated at the dehydrator for illustrative purposes.

CONOCOPHILLIPS COMPANY

ZIA HILLS CENTRAL FACILITY

Uncontrolled Facility Emissions Summary

SOURCE DESCRIPTION	UNIT NUMBER	STACK NUMBER	NOx		CO		VOC (INCLUDES HAPs)		SO_2		$PM_{10\ \&\ 2.5}$		HAPs	
			lb/hr	TPY	lb/hr	TPY	lb/hr	TPY	lb/hr	TPY	lb/hr	TPY	lb/hr	TPY
CATERPILLAR 3606A4 ULB ENGINE	ENG1	ENG1	1.24	5.43	11.33	49.61	4.82	21.13	0.17	0.74	0.15	0.65	1.03	4.53
CATERPILLAR 3606A4 ULB ENGINE	ENG2	ENG2	1.24	5.43	11.33	49.61	4.82	21.13	0.17	0.74	0.15	0.65	1.03	4.53
CATERPILLAR 3606A4 ULB ENGINE	ENG3	ENG3	1.24	5.43	11.33	49.61	4.82	21.13	0.17	0.74	0.15	0.65	1.03	4.53
CATERPILLAR 3606A4 ULB ENGINE	ENG4	ENG4	1.24	5.43	11.33	49.61	4.82	21.13	0.17	0.74	0.15	0.65	1.03	4.53
CATERPILLAR 3606A4 ULB ENGINE	ENG5	ENG5	1.24	5.43	11.33	49.61	4.82	21.13	0.17	0.74	0.15	0.65	1.03	4.53
CATERPILLAR 3606A4 ULB ENGINE	ENG6	ENG6	1.24	5.43	11.33	49.61	4.82	21.13	0.17	0.74	0.15	0.65	1.03	4.53
CATERPILLAR 3606A4 ULB ENGINE	ENG7	ENG7	1.24	5.43	11.33	49.61	4.82	21.13	0.17	0.74	0.15	0.65	1.03	4.53
CATERPILLAR 3606A4 ULB ENGINE	ENG8	ENG8	1.24	5.43	11.33	49.61	4.82	21.13	0.17	0.74	0.15	0.65	1.03	4.53
CATERPILLAR 3606A4 ULB ENGINE	ENG9	ENG9	1.24	5.43	11.33	49.61	4.82	21.13	0.17	0.74	0.15	0.65	1.03	4.53
CATERPILLAR 3606A4 ULB ENGINE	ENG10	ENG10	1.24	5.43	11.33	49.61	4.82	21.13	0.17	0.74	0.15	0.65	1.03	4.53
CATERPILLAR 3606A4 ULB ENGINE	ENG11	ENG11	1.24	5.43	11.33	49.61	4.82	21.13	0.17	0.74	0.15	0.65	1.03	4.53
CATERPILLAR 3606A4 ULB ENGINE	ENG12	ENG12	1.24	5.43	11.33	49.61	4.82	21.13	0.17	0.74	0.15	0.65	1.03	4.53
CONDENSATE STORAGE TANK: 1000 BBL	OT1	FL1	--	--	--	--	40.27	141.11	--	--	--	--	1.39	4.86
CONDENSATE STORAGE TANK: 1000 BBL	OT2	FL1	--	--	--	--	40.27	141.11	--	--	--	--	1.39	6.07
CONDENSATE STORAGE TANK: 1000 BBL	OT3	FL1	--	--	--	--	40.27	141.11	--	--	--	--	1.39	6.07
CONDENSATE STORAGE TANK: 1000 BBL	OT4	FL1	--	--	--	--	40.27	141.11	--	--	--	--	1.39	6.07
OFF-SPECIFICATION CONDENSATE TANK: 1000 BBL	OT5	FL1	--	--	--	--	433.53	1519.11	--	--	--	--	19.19	67.24
GUN BARREL SEPARATORS: 1000 BBL	GB1	FL1	--	--	--	--	32.96	144.37	--	--	--	--	2.08	9.13
GUN BARREL SEPARATORS: 1000 BBL	GB2	FL1	--	--	--	--	32.96	144.37	--	--	--	--	2.08	9.13
PRODUCED WATER TANKS: 1000 BBL	WT1	FL1	--	--	--	--	0.98	4.29	--	--	--	--	0.13	0.58
PRODUCED WATER TANKS: 1000 BBL	WT2	FL1	--	--	--	--	0.98	4.29	--	--	--	--	0.13	0.58
PRODUCED WATER TANKS: 1000 BBL	WT3	FL1	--	--	--	--	0.98	4.29	--	--	--	--	0.13	0.58
PRODUCED WATER TANKS: 1000 BBL	WT4	FL1	--	--	--	--	0.98	4.29	--	--	--	--	0.13	0.58
PRODUCED WATER TANKS: 1000 BBL	WT5	FL1	--	--	--	--	0.98	4.29	--	--	--	--	0.13	0.58
PRODUCED WATER TANKS: 1000 BBL	WT6	FL1	--	--	--	--	0.98	4.29	--	--	--	--	0.13	0.58
PRODUCED WATER TANKS: 1000 BBL	WT7	FL1	--	--	--	--	0.98	4.29	--	--	--	--	0.13	0.58
PRODUCED WATER TANKS: 1000 BBL	WT8	FL1	--	--	--	--	0.98	4.29	--	--	--	--	0.13	0.58
SLOP OIL TANKS: 1000 BBL	ST1	FL1	--	--	--	--	1.91	8.37	--	--	--	--	0.11	0.46
SLOP OIL TANKS: 1000 BBL	ST2	FL1	--	--	--	--	1.91	8.37	--	--	--	--	0.11	0.46
FLARE 1: PILOT ONLY	FL1	FL1	0.04	0.18	0.08	0.35	0.06	0.28	0.00	0.01	0.00	0.00	0.00	0.01
FLARE 2: PILOT ONLY	FL2	FL2	0.06	0.27	0.13	0.55	0.10	0.44	0.00	0.02	0.00	0.00	0.00	0.01
FLARE 3: PILOT ONLY	FL3	FL3	0.06	0.27	0.13	0.55	0.10	0.44	0.00	0.02	0.00	0.00	0.00	0.01
STABILIZER - HEATER 1 (3.5 MMBTU/HR)	STAB1	STAB1	0.42	1.86	0.36	1.56	0.02	0.10	0.00	0.01	0.03	0.14	0.01	0.03
STABILIZER - HEATER 1 (3.5 MMBTU/HR)	STAB2	STAB2	0.42	1.86	0.36	1.56	0.02	0.10	0.00	0.01	0.03	0.14	0.01	0.03
STABILIZER - HEATER 1 (3.5 MMBTU/HR)	STAB3	STAB3	0.42	1.86	0.36	1.56	0.02	0.10	0.00	0.01	0.03	0.14	0.01	0.03
TRIETHYLENE GLYCOL DEHYDRATOR	DEHY1	RB1	---	---	---	---	20.77	90.98	---	---	---	---	4.34	19.01
GLYCOL REGENERATOR (0.5 MMBTU/HR)	RB1	RB1	0.12	0.54	0.10	0.46	0.01	0.03	0.00	0.00	0.01	0.04	0.00	0.01
TRIETHYLENE GLYCOL DEHYDRATOR	DEHY2	RB2	---	---	---	---	20.77	90.98	---	---	---	---	4.34	19.01
GLYCOL REGENERATOR (0.5 MMBTU/HR)	RB2	RB2	0.12	0.54	0.10	0.46	0.01	0.03	0.00	0.00	0.01	0.04	0.00	0.01
TRIETHYLENE GLYCOL DEHYDRATOR	DEHY3	RB3	---	---	---	---	36.30	158.98	---	---	---	---	7.58	33.22
GLYCOL REGENERATOR (0.75 MMBTU/HR)	RB3	RB3	0.19	0.81	0.16	0.68	0.01	0.04	0.00	0.00	0.01	0.06	0.00	0.01
TRIETHYLENE GLYCOL DEHYDRATOR	DEHY4	RB4	---	---	---	---	36.30	158.98	---	---	---	---	7.58	33.22
GLYCOL REGENERATOR (0.75 MMBTU/HR)	RB4	RB4	0.19	0.81	0.16	0.68	0.01	0.04	0.00	0.00	0.01	0.06	0.00	0.01
LINE HEATER (1.0 MMBTU/HR)	LH1	LH1	0.12	0.53	0.10	0.45	0.01	0.03	0.00	0.00	0.01	0.04	0.00	0.01
OVERHEAD GAS SCRUBBER	OSH1	FL2/FL3	---	---	---	---	1915.31	6711.24	---	---	---	---	40.92	143.39
WATER DEGAS VESSEL	WDGV1	FL2/FL3	---	---	---	---	344.06	1205.59	---	---	---	---	22.12	77.49
VAPOR RECOVERY TOWER	VRT	VRT	---	---	---	---	434.02	1520.81	---	---	---	---	16.97	59.47
FUGITIVE EMISSIONS: EQUIPMENT LEAKS	FUGITIVES	FUGITIVES	---	---	---	---	3.13	13.70	---	---	---	---	0.09	0.39

	NOx		CO		VOC (INCLUDES HAPs)		SO_2		$PM_{10\ \&\ 2.5}$		HAPs	
	lb/hr	TPY	lb/hr	TPY	lb/hr	TPY	lb/hr	TPY	lb/hr	TPY	lb/hr	TPY
FACILITY EMISSIONS	**17.1**	**74.7**	**137.9**	**604.2**	**3541.1**	**12629.8**	**2.0**	**9.0**	**1.9**	**8.4**	**146.6**	**553.8**

*** A -'--" symbol indicates the pollutant is not accounted for using the AECT or not emitted.**

CONOCOPHILLIPS COMPANY
ZIA HILLS CENTRAL FACILITY
Inlet Oil Analysis

Component	Mole %	Weight %
H2S	0.0000	0.0000
Nitrogen	0.0300	0.0062
Methane	6.8080	0.8122
Carbon Dioxide	0.0480	0.0157
Ethane	5.0090	1.1201
Propane	6.5520	2.1486
i-Butane	1.8700	0.8083
n-Butane	5.7170	2.4712
i-Pentane	2.7740	1.4884
n-Pentane	3.9660	2.1280
i-Hexane	2.9530	1.8925
n-Hexane	2.9620	1.8983
2,2,4-Trimethylpentane	0.0500	0.0425
Cyclohexane	0.0000	0.0000
Benzene	0.1840	0.1069
i-Heptane	6.4575	4.8121
n-Heptane	2.7675	2.0623
Toluene	0.8700	0.5961
n-Octane	10.8900	9.2511
Ethylbenzene	0.2160	0.1705
meta-Xylene	1.0540	0.8322
n-Nonane	7.2780	6.9419
C10+	31.5440	60.3948
TEG	0.0000	0.0000
Water	0.0000	0.0000
Methanol	0.0000	0.0000
Total	100.00	100.00

Molecular Weight	134.46
Btu Content (Btu/scf)	7162.19
Non-Methane Hydrocarbons (Weight %)	99.17
VOCs (Weight %)	98.05
HAPs (Weight %)	3.65

[1]**Data obatained from analysis.**

CONOCOPHILLIPS COMPANY
ZIA HILLS CENTRAL FACILITY
Inlet Gas Analysis

Component	Mole %	Weight %
H2S	0.0000	0.0000
Nitrogen	1.1690	1.5057
Methane	76.6590	56.5462
Carbon Dioxide	0.0890	0.1801
Ethane	12.2200	16.8951
Propane	5.6960	11.5487
i-Butane	0.8340	2.2288
n-Butane	1.8350	4.9040
i-Pentane	0.4200	1.3933
n-Pentane	0.4760	1.5791
i-Hexane	0.1190	0.4715
n-Hexane	0.0850	0.3368
2,2,4-Trimethylpentane	0.0000	0.0000
Cyclohexane	0.0390	0.1509
Benzene	0.0050	0.0180
i-Heptane	0.0890	0.4100
n-Heptane	0.0330	0.1520
Toluene	0.0090	0.0381
n-Octane	0.0950	0.4990
Ethylbenzene	0.0010	0.0049
meta-Xylene	0.0150	0.0732
n-Nonane	0.0440	0.2595
C10+	0.0680	0.8050
TEG	0.0000	0.0000
Water	0.0000	0.0000
Methanol	0.0000	0.0000
Total	100.00	100.00

Molecular Weight	21.75
Btu Content (Btu/scf)	1294.36
Non-Methane Hydrocarbons (Weight %)	41.77
VOCs (Weight %)	24.87
HAPs (Weight %)	0.47

[1]**Data obatained from analysis.**

CONOCOPHILLIPS COMPANY
ZIA HILLS CENTRAL FACILITY
Stabilizer Heater Emissions

Emission unit number(s): STAB1 - STAB3
Source description: Stabilizer Heaters

Fuel Consumption and Stack Parameters

Input heat rate:	3.50	MMBtu/hr	Capacity
Fuel heat value:	1262.0	Btu/scf	Field Gas
Fuel rate:	2773.4	scf/hr	Input heat rate / fuel heat value
Annual fuel usage:	24.3	MMscf/yr	8760 hrs/yr operation
Stack height:	30	ft	
Stack diameter:	1.94	ft	
Stack diameter:	23.25	in	
Exhaust temp (Tstk):	700	°F	
Air Flow:	36053.9	ft3/hr	
Total Flow:	38827.3	ft3/hr	
Stack Area:	2.95	ft2	
Raw Velocity:	3.66	ft/sec	
Stack Velocity Coefficient:	2.19		
Exhaust velocity:	8.01	ft/sec	

Emission Rates

Uncontrolled Heater Emissions

NOx[1]	CO[1]	VOC[1]	SO_2[1]	PM[1]	
100.00	84.00	5.50	0.60	7.60	lb/MMscf
0.42	0.36	0.02	0.00	0.03	lb/hr
1.86	1.56	0.10	0.01	0.14	tpy (8760 hrs)

Hexane[1]	
2.23	lb/MMscf
0.01	lb/hr
0.03	tpy (8760 hrs)

GHG Emissions

CO_2	CH4	CH_4 as CO_2e[2]	N_2O	N_2O as CO_2e[2]	Total CO_2e2	
117.00	0.002	0.055	0.0002	0.066		lb/MMbtu
409.49	0.008	0.19	0.001	0.23	409.91	lb/hr
1793.57	0.03	0.85	0.003	1.01	1795.42	tpy (8760 hrs)

1 USEPA AP-42, Section 1.4-1 and 2. Factors are converted to lb/MMBtu and adjusted for site Btu content.

2 40 CFR 98 Emission Factors. Global warming potential of 25 for CH4 and 298 for N20.

CONOCOPHILLIPS COMPANY
ZIA HILLS CENTRAL FACILITY
Line Heater Emissions

Emission unit number(s): LH1
Source description: Line Heater

Fuel Consumption and Stack Parameters

Input heat rate:	1.00	MMBtu/hr	Capacity
Fuel heat value:	1262.0	Btu/scf	Field Gas
Fuel rate:	792.4	scf/hr	Input heat rate / fuel heat value
Annual fuel usage:	6.9	MMscf/yr	8760 hrs/yr operation
Stack height:	15	ft	
Stack diameter:	0.67	ft	
Stack diameter:	8.00	in	
Exhaust temp (Tstk):	700	°F	
Air Flow:	10301.1	ft3/hr	
Total Flow:	11093.5	ft3/hr	
Stack Area:	0.35	ft2	
Raw Velocity:	8.83	ft/sec	
Stack Velocity Coefficient	2.19		
Exhaust velocity:	19.32	ft/sec	

Emission Rates

Uncontrolled Heater Emissions

NOx[1]	CO[1]	VOC[1]	SO_2[1]	PM[1]	
100.00	84.00	5.50	0.60	7.60	lb/MMscf
0.12	0.10	0.01	0.00	0.01	lb/hr
0.53	0.45	0.03	0.00	0.04	tpy (8760 hrs)

Hexane[1]	
2.23	lb/MMscf
0.00	lb/hr
0.01	tpy (8760 hrs)

GHG Emissions

CO_2	CH4	CH_4 as CO_2e[2]	N_2O	N_2O as CO_2e[2]	Total CO_2e2	
117.00	0.002	0.055	0.0002	0.066		lb/MMbtu
117.00	0.002	0.06	0.000	0.07	117.12	lb/hr
512.45	0.01	0.24	0.001	0.29	512.98	tpy (8760 hrs)

1 USEPA AP-42, Section 1.4-1 and 2. Factors are converted to lb/MMBtu and adjusted for site Btu content.
2 40 CFR 98 Emission Factors. Global warming potential of 25 for CH4 and 298 for N20.

CONOCOPHILLIPS COMPANY
ZIA HILLS CENTRAL FACILITY
Glycol Reboiler (RB1-RB2) Emissions

Emission unit number(s): RB1-RB2
Source description: Glycol Reboiler Heaters - 0.5 MMBtu/hr each

Fuel Consumption and Stack Parameters

Heat Rate:	0.50	MMBtu/hr	
Fuel heat value:	2586	Btu/scf	Promax (Post-condenser gas)
Fuel rate:	356.8	scf/hr	Post-condenser and Flash Drum Gas to Reboiler
Annual fuel usage:	3.1	MMscf/yr	8760 hrs/yr operation
Stack height:	20	ft	
Stack diameter:	1.00	ft	
Stack diameter:	12.00	in	
Exhaust temp (Tstk):	700	°F	
Air Flow:	4638.6	ft3/hr	
Total Flow:	4995.4	ft3/hr	40 CFR 60 Appendix A Method 19 Table 19-2
Stack Area:	0.79	ft2	F Factor (scf/MMBtu) * (MMBtu/hr) / (60 min/hr) / (60 sec/min)
Raw Velocity:	1.77	ft/sec	
Stack Velocity Coefficient	2.19		Calculated - Exhaust flow / cross sectional area of stack
Exhaust velocity:	3.87	ft/sec	

Uncontrolled Heater Emissions

NOx[1]	CO[1]	VOC[1]	SO_2[1]	PM[1]	
100.00	84.00	5.50	0.60	7.60	lb/MMscf
0.12	0.10	0.01	0.00	0.01	lb/hr
0.54	0.46	0.03	0.00	0.04	tpy (8760 hrs)

Hexane[1]	
4.56	lb/MMscf
0.00	lb/hr
0.01	tpy (8760 hrs)

GHG Emissions

CO_2	CH4	CH_4 as CO_2e[2]	N_2O	N_2O as CO_2e[2]	Total CO_2e2	
117.00	0.002	0.055	0.0002	0.066		lb/MMbtu
58.50	0.001	0.03	0.000	0.03	58.56	lb/hr
256.22	0.00	0.12	0.000	0.14	256.49	tpy (8760 hrs)

1 USEPA AP-42, Section 1.4-1 and 2. Factors are converted to lb/MMBtu and adjusted for site Btu content.
2 40 CFR 98 Emission Factors. Global warming potential of 25 for CH4 and 298 for N20.

CONOCOPHILLIPS COMPANY
ZIA HILLS CENTRAL FACILITY
Glycol Reboiler (RB3-RB4) Emissions

Emission unit number(s): RB3-RB4
Source description: Glycol Reboiler Heaters - 0.75 MMBtu/hr each

Fuel Consumption and Stack Parameters

Heat Rate:	0.75	MMBtu/hr	
Fuel heat value:	2580	Btu/scf	Promax (Post-condenser gas)
Fuel rate:	628.1	scf/hr	Post-condenser and Flash Drum Gas to Reboiler
Annual fuel usage:	5.5	MMscf/yr	8760 hrs/yr operation
Stack height:	20	ft	
Stack diameter:	1.00	ft	
Stack diameter:	12.00	in	
Exhaust temp (Tstk):	700	°F	
Air Flow:	8165.9	ft3/hr	
Total Flow:	8794.1	ft3/hr	40 CFR 60 Appendix A Method 19 Table 19-2
Stack Area:	0.79	ft2	F Factor (scf/MMBtu) * (MMBtu/hr) / (60 min/hr) / (60 sec/min)
Raw Velocity:	3.11	ft/sec	
Stack Velocity Coefficient	2.19		Calculated - Exhaust flow / cross sectional area of stack
Exhaust velocity:	6.81	ft/sec	

Uncontrolled Heater Emissions

NOx[1]	CO[1]	VOC[1]	SO_2[1]	PM[1]	
100.00	84.00	5.50	0.60	7.60	lb/MMscf
0.19	0.16	0.01	0.00	0.01	lb/hr
0.81	0.68	0.04	0.00	0.06	tpy (8760 hrs)

Hexane[1]	
4.55	lb/MMscf
0.00	lb/hr
0.01	tpy (8760 hrs)

GHG Emissions

CO_2	CH4	CH_4 as CO_2e[2]	N_2O	N_2O as CO_2e[2]	Total CO_2e2	
117.00	0.002	0.055	0.0002	0.066		lb/MMbtu
87.75	0.002	0.04	0.000	0.05	87.84	lb/hr
384.34	0.01	0.18	0.001	0.22	384.73	tpy (8760 hrs)

1 USEPA AP-42, Section 1.4-1 and 2. Factors are converted to lb/MMBtu and adjusted for site Btu content.
2 40 CFR 98 Emission Factors. Global warming potential of 25 for CH4 and 298 for N20.

CONOCOPHILLIPS COMPANY
ZIA HILLS CENTRAL FACILITY
Engine Emissions

Emission Unit Designation	ENG1-ENG12	Subject to NSPS Subpart JJJJ
Source Description	Caterpillar 3606A4	
Type	Turbocharged 4SLB Engine	
Rated Output	1,875	hp, per manufacturer
Site Elevation, ft	3,173	ft, per topographic map
Altitude Deration Factor	1.00	3% per 1000' over 4000' for turbocharged engines
Altitude Derated Output	1,875	hp
Maximum Design Heat Input	14.8838	MMBtu/hr, site derated
Fuel Gas Heating Value	1,262.0	Btu/scf, analysis
Fuel Consumption	7938	Btu/hp-hr, per manufacturer at 75% load
Hourly Fuel Consumption	11794	scf/hr, site derated
Annual Fuel Consumption	103.3	MMscf/yr, site derated
Fuel Sulfur Content	50	gr/Mscf, estimated
Operating Time	8760	hrs/year

Stack Height	29.6	ft, CSI measurement
Exhaust Gas Velocity	91.7	ft/sec, calculated
Exhaust Temp	809	^{o}F, manufacturer
Stack Inside Diameter	1.67	ft, CSI measurement
Exhaust Gas Flow	11998	cfm, manufacturer

Pollutant		Emission Factor		Control Efficiency	Permit Limit	Emission Rate				Notes
						Uncontrolled		Controlled		
				(%)	g/hp-hr	(lb/hr)	(tpy)	(lb/hr)	(tpy)	
Criteria Pollutants	NO_x	0.30	g/hp-hr		0.30	1.24	5.43	1.24	5.43	1
	CO	2.74	g/hp-hr	78.10%	0.60	11.33	49.61	2.48	10.86	1
	VOC	0.94	g/hp-hr	25.53%	0.70	3.89	17.02	2.89	12.67	1
	VOC	Including Aldehydes			0.785	4.82	21.13	3.24	14.21	1
	SO_2	14.29	lb/MMscf		-	0.17	0.74	0.17	0.74	2
	PM_{10}	9.91E-03	lb/MMBtu		-	0.15	0.65	0.15	0.65	3
HAP	Formaldehyde	0.19	g/hp-hr	78.95%	0.0400	0.79	3.44	0.17	0.72	1
	Acetaldehyde	8.36E-03	lb/MMBtu	25.53%	-	0.15	0.67	0.11	0.50	3
	Acrolein	5.14E-03	lb/MMBtu	25.53%	-	0.09	0.41	0.07	0.31	3
	Total HAP				-	1.03	4.53	0.35	1.54	3
GHG	CO2	455	g/hp-hr		-	1881	8238	-	-	1
	CH4	0.0022	lb/MMBtu		-	0.03	0.14	-	-	3
	CH4 as CO2e	25	GWP		-	-	3.59	-	-	3
	N2O	0.0002	lb/MMBtu		-	0.003	0.01	-	-	3
	N2O as CO2e	298	GWP		-	-	4.28	-	-	3

Notes:

[1] Manufacturer engine specifications. AP-42 factors were adjusted for heat content. VOC and HCOH use stack test data with a 15% and 25% safety factors, respectively.

[2] Fuel Sulfur Content (50 gr/Mscf) / 7000 (gr/lb) x 1000 (Mscf/MMscf) * 64 lb/lb-mol SO_2/32 lb/lb-mol S

[3] USEPA AP-42 Ch. 3.2 Natural Gas-fired Reciprocating Engines

[4] 40 CFR 98 Emission Factors. Global warming potential of 25 for CH4 and 298 for N20.

CONOCOPHILLIPS COMPANY

ZIA HILLS CENTRAL FACILITY

HP FLARE (FL1) EMISSIONS SUMMARY

Stream Source	NOx		CO		Total VOC (Includes Total HAPs)		SO_2		$PM_{10 \& 2.5}$		Total HAPs	
	lb/hr	TPY	lb/hr	TPY	lb/hr	TPY	lb/hr	TPY	lb/hr	TPY	lb/hr	TPY
Flare Pilot	0.04	0.18	0.08	0.35	0.06	0.28	0.00	0.01	0.00	0.00	0.00	0.01
Inlet Gas Flaring	199.18	6.20	397.63	12.37	309.29	9.62	0.00	0.00	8.55	0.27	6.48	0.20
Total Emissions	**199.22**	**6.37**	**397.71**	**12.72**	**309.36**	**9.91**	**0.00**	**0.01**	**8.55**	**0.27**	**6.48**	**0.21**
Normal Operations (Including Pilot)	**0.04**	**0.18**	**0.08**	**0.35**	**0.06**	**0.28**	**0.00**	**0.01**	**0.00**	**0.00**	**0.00**	**0.01**
Intermittent Gas (Inlet Gas)	**199.18**	**6.20**	**397.63**	**12.37**	**309.29**	**9.62**	**0.00**	**0.00**	**8.55**	**0.27**	**6.48**	**0.20**

CONOCOPHILLIPS COMPANY
ZIA HILLS CENTRAL FACILITY
HP GAS TO FL1 DURING COMPRESSOR DOWNTIME

Component	Mole %	Weight %
H2S	0.0000	0.0000
Nitrogen	1.1606	1.5030
Methane	76.1429	56.4681
Carbon Dioxide	0.0885	0.1800
Ethane	12.1685	16.9145
Propane	5.7056	11.6306
i-Butane	0.8436	2.2666
n-Butane	1.8689	5.0216
i-Pentane	0.4372	1.4582
n-Pentane	0.5008	1.6703
i-Hexane	0.1319	0.5254
n-Hexane	0.0965	0.3843
2,2,4-Trimethylpentane	0.0000	0.0001
Cyclohexane	0.0443	0.1722
Benzene	0.0056	0.0204
i-Heptane	0.1060	0.4908
n-Heptane	0.0392	0.1814
Toluene	0.0107	0.0454
n-Octane	0.0865	0.4568
Ethylbenzene	0.0009	0.0042
meta-Xylene	0.0120	0.0587
n-Nonane	0.0175	0.1038
C10+	0.0000	0.0000
TEG	0.0000	0.0000
Water	0.5324	0.4434
Methanol	0.0000	0.0000
Total	100.00	100.00

Molecular Weight	21.63
Btu Content (Btu/scf)	1282.93
Non-Methane Hydrocarbons (Weight %)	41.41
VOCs (Weight %)	24.49
HAPs (Weight %)	0.51

[1]**Data obtained from Promax.**

CONOCOPHILLIPS COMPANY
ZIA HILLS CENTRAL FACILITY
HP FLARE (FL1) - PILOT & PURGE GAS EMISSIONS

Pilot Fuel + Purge Gas	5520	SCF/Day
Duration	8760	Hours/Year
Flared	Yes	(Yes/No)
Vented	No	(Yes/No)
Heating Value	1262.0	Btu/SCF (Fuel Gas Analysis)

Component	Emission Rate (lb/hr)	Emission Rate (TPY)
CO2	33.96	148.75
CH4	0.00	0.00
CH4 as CO2e	0.01	0.06
CO[1]	0.08	0.35
NOx[1]	0.04	0.18
VOCs[2]	0.06	0.28
HAPs[2]	0.00	0.01
SO_2[3]	0.00	0.01
H2S[3]	0.00	0.00

[1] The CO and NOx emission factors of 0.2755 and 0.138 lb/MMBtu are based on TCEQ document RG-360A/11 (February 2012)

[2] VOC example calculation: SCF/day * 14.7 / 10.73 / 528 * VOC Wt % * Gas MW

[3] H2S example calculation: SCF/day * 14.7 / 10.73 / 528 * H2S Wt% * Gas MW. SO2 is calculated assuming MW ratio of 64.07:34.08.

CONOCOPHILLIPS COMPANY

ZIA HILLS CENTRAL FACILITY

INLET GAS FLARING EMISSIONS

Total Gas Production - SCF/Day	27,000,000
Total Gas Production - SCF/Hr	1,125,000
Total Gas Production - SCF/Year	70,000,000
Heating Value - BTU/SCF	1282.93

* Inlet gas flaring during compressor downtime, blowdowns and starter vents.

Component	Hourly Emission Rate (lb/hr)	Annualized Emission Rate (TPY)
CO[1]	397.63	12.37
NOx[1]	199.18	6.20
VOCs[2]	309.29	9.62
SO_2[3]	0.00	0.00
HAP[2]	6.48	0.20
$PM_{10 \& 2.5}$[4]	8.55	0.27

[1] The CO and NOx emission factors of 0.2755 and 0.138 lb/MMBtu are based on TCEQ document RG-360A/11 (February 2012)

[2] VOC example calculation: SCF/day * 14.7 / 10.73 / 528 * VOC weight % * Gas MW

[3] H2S/SO2 example calculation: SCF/day * 14.7 / 10.73 / 528 * H2S Wt% * Gas MW. SO2 is calculated assuming MW ratio of 64.07:34.08.

[4] PM 10 & 2.5 emissions are based on AP-42, Section 1.4.

CONOCOPHILLIPS COMPANY

ZIA HILLS CENTRAL FACILITY

FLARE (FL1) - GHG EMISSIONS SUMMARY

1) $E_{a,CH4} = V_a * X_{CH4} * [(1- \eta)* Z_L + Z_U$ = **1,066,000.03** **SCF/Yr**

Va = **70,000,000.00**
X_{CH4} = **0.761** **HP Gas**
N = **0.98**
Z_L = **1.00**
Z_U = **0.00**

Source	Annual Volume
Inlet	70000000
	70000000

2) $E_{a,CO2}$ (uncombusted) = $V_a * X_{CO2}$ = **61,942.00** **SCF/Yr**

Va = **70,000,000.00**
X_{CO2} = **0.0009** **HP Gas**

3) $E_{a,CO2}$ (combusted) = Σ (η * Va * Yj * Rj * Z_L)

N = **0.98**
V_a = **70,000,000.00**

			Rj =		**$E_{a,CO2}$ =**
Y_J=	**Methane**	0.7614	1	Inlet	52,234,001.49
	Ethane	0.1217	2		16,695,192.82
	Propane	0.0571	3		11,742,222.93
	Butane	0.0271	4		7,443,117.11
	Pentane +	0.0149	5		5,107,105.70
Z_L =	**1.00**				**93,221,640** **SCF/Yr**

3) $E_{s,n} = \frac{E_{a,n} * (459.67 + T_s) * P_a}{(459.67 + T_a) * P_s}$

$E_{a,n}$(CH4) = 1,066,000.03 = **933,041.85** **SCF/Yr**
$E_{a,n}$(CO2) = 93,283,582.04 = **81,648,671** **SCF/Yr**
Ts = 60.00 °F
Ta = 76.70 °F (Midland, AP-42)
Ps = 14.70
Pa = 13.28 Midland, AP-42

4) $Mass_{s,i} = E_{s,i} * \rho_i * 10^3$

$E_{s,i}$ (CH4) = 933,041.85
$E_{s,i}$ (CO2) = 81,648,671.31
p_i (CH4) = 0.0192 kg/ft3 = 17.91 metric tons
p_i (CO2) = 0.0526 kg/ft3 = 4294.72 metric tons

5) $CO_2e = CO_2 + (CH_4 X GWP)$

			short tons	CO_2e
CO2 =	4294.72	=	4734.12	4734.12
CH4 =	17.91	=	19.75	493.68
CH4 GWP =	25			**5227.80**

*** V_a is the sum of gas routed to the flare.**

CONOCOPHILLIPS COMPANY
BATTLESHIP CENTRAL FACILITY
40 CFR 60.18 Verification (Flare 1)

Tip Velocity Calculations		
Flare Tip Diameter	12	Inches
Flare Tip Diameter	1.00	ft
Area of Flare Tip	0.785	ft^2
Gas Flow Rate	27,000,000	SCFD
Gas Flow Rate	1,125,000	SCF/Hr
Gas Flow Rate	312.50	SCF/Sec
Maximum Tip Velocity	397.89	ft/Sec
Heating Value	> 1000	BTU/SCF

CONOCOPHILLIPS COMPANY

ZIA HILLS CENTRAL FACILITY

LP FLARE (FL2/FL3) EMISSIONS SUMMARY

Stream Source	NOx		CO		Total VOC (Includes Total HAPs)		SO_2		$PM_{10 \& 2.5}$		Total HAPs	
	lb/hr	TPY	lb/hr	TPY	lb/hr	TPY	lb/hr	TPY	lb/hr	TPY	lb/hr	TPY
Flare 2 Pilot	0.06	0.27	0.13	0.55	0.10	0.44	0.00	0.02	0.00	0.00	0.00	0.01
Flare 3 Pilot	0.06	0.27	0.13	0.55	0.10	0.44	0.00	0.02	0.00	0.00	0.00	0.01
Overhead Gas Scrubber (VRU Downtime)	9.28	0.98	18.52	1.95	38.31	4.03	0.00	0.00	0.27	0.03	0.82	0.09
Vapor Recovery Tower (VRU Downtime)	1.38	0.14	2.75	0.29	8.68	0.91	0.00	0.00	0.02	0.00	0.34	0.04
Water Degas Vessel (VRU Downtime)	1.24	0.13	2.47	0.26	6.88	0.72	0.00	0.00	0.03	0.00	0.44	0.05
Oil Tank Vapors (VRU Downtime)	0.54	0.06	1.07	0.11	3.22	0.34	0.00	0.00	0.01	0.00	0.11	0.01
Off-Specification Oil Tank Vapors (VRU Downtime)	1.38	0.14	2.75	0.29	8.67	0.91	0.00	0.00	0.02	0.00	0.38	0.04
Gun Barrel Vapors (VRU Downtime)	0.26	0.03	0.53	0.06	1.32	0.17	0.00	0.00	0.01	0.00	0.08	0.01
Slop Tank Tank Vapors (VRU Downtime)	0.02	0.00	0.03	0.00	0.08	0.01	0.00	0.00	0.00	0.00	0.00	0.00
Water Tank Vapors (VRU Downtime)	0.04	0.00	0.08	0.01	0.16	0.02	0.00	0.00	0.00	0.00	0.02	0.00
Facility Shutdown (60 days) (Tank Breathing Vapors)	0.04	0.02	0.09	0.05	0.25	0.14	0.00	0.00	0.00	0.00	0.01	0.00
Total Emissions	**14.30**	**2.06**	**28.55**	**4.11**	**67.76**	**8.14**	**0.01**	**0.03**	**0.36**	**0.04**	**2.22**	**0.25**
Normal Operations (Pilots Only)	**0.13**	**0.55**	**0.25**	**1.10**	**0.20**	**0.89**	**0.01**	**0.03**	**0.00**	**0.00**	**0.00**	**0.02**
Intermittent Gas (VRU Downtime/Shutdown)	**14.18**	**1.51**	**28.30**	**3.02**	**67.56**	**7.26**	**0.00**	**0.00**	**0.36**	**0.04**	**2.22**	**0.24**

CONOCOPHILLIPS COMPANY
ZIA HILLS CENTRAL FACILITY
LP FLARES (FL2/FL3) - PILOT & PURGE GAS EMISSIONS

Pilot Fuel + Purge Gas	8640	SCF/Day
Duration	8760	Hours/Year
Flared	Yes	(Yes/No)
Vented	No	(Yes/No)
Heating Value	1262.0	Btu/SCF (Gas Analysis)

Component	Emission Rate (lb/hr)	Emission Rate (TPY)
CO2	53.16	232.82
CH4	0.00	0.00
CH4 as CO2e	0.02	0.10
CO[1]	0.13	0.55
NOx[1]	0.06	0.27
VOCs[2]	0.10	0.44
HAPs[2]	0.00	0.01
SO_2[3]	0.00	0.02
H2S[3]	0.00	0.00

[1] The CO and NOx emission factors of 0.2755 and 0.138 lb/MMBtu are based on TCEQ document RG-360A/11 (February 2012)

[2] VOC example calculation: SCF/day * 14.7 / 10.73 / 528 * VOC Wt % * Gas MW

[3] H2S example calculation: SCF/day * 14.7 / 10.73 / 528 * H2S Wt% * Gas MW. SO2 is calculated assuming MW ratio of 64.07:34.08.

CONOCOPHILLIPS COMPANY

ZIA HILLS CENTRAL FACILITY

FLARE (FL2-FL3) - GHG EMISSIONS SUMMARY

1) $E_{a,CH4} = V_a * X_{CH4} * [(1- \eta)* Z_L + Z_U$ = **76,959.02** **SCF/Yr**

Va = **10,070,794.04**

X_{CH4} = **0.382** **OHS Scrubber**

N = **0.98**

Z_L = **1.00**

Z_U = **0.00**

2) $E_{a,CO2}$ (uncombusted) = $V_a * X_{CO2}$ = **8,840.44** **SCF/Yr**

Va = **10,070,794.04**

X_{CO2} = **0.0009** **OHS Scrubber**

Source	Annual Volume
OHS	7404195
VRT	684176
WDG	825996
OT1-OT4	265500
OT5	671883
ST-ST2	8,660
GB1-GB2	151058
WT1-WT8	59326
	10070794

3) $E_{a,CO2}$ (combusted) = $\Sigma (\eta * Va * Yj * Rj * Z_L)$

N = **0.98**

V_a =	**10,070,794.04**		**Rj =**		**$E_{a,\ CO2}$ =**
Y_J=	**Methane**	0.3821	1	OHS Scrubber	3,770,991.75
	Ethane	0.2038	2	OHS Scrubber	4,023,210.64
	Propane	0.3218	3	VRT	9,528,957.23
	Butane	0.3186	4	VRT	12,576,361.59
	Pentane +	0.2205	5		10,882,431.01
Z_L =	**1.00**				**40,781,952** **SCF/Yr**

3) $E_{s,n} = \frac{E_{a,n} * (459.67 + T_s) * P_a}{(459.67 + T_a) * P_s}$

$E_{a,n}$(CH4) = 76,959.02 = **67,360.21** **SCF/Yr**

$E_{a,n}$(CO2) = 40,790,792.67 = **35,703,110** **SCF/Yr**

Ts = 60.00 ºF

Ta = 76.70 ºF (Midland, AP-42)

Ps = 14.70

Pa = 13.28 Midland, AP-42

4) $Mass_{s,i} = E_{s,i} * \rho_i * 10^3$

$E_{s,i}$ (CH4) = 67,360.21

$E_{s,i}$ (CO2) = 35,703,110.35

p_i (CH4) = 0.0192 kg/ft3 = 1.29 metric tons

p_i (CO2) = 0.0526 kg/ft3 = 1877.98 metric tons

5) $CO_2e = CO_2 + (CH_4 X GWP)$ short tons CO_2e

CO2 = 1877.98 = 2070.12 2070.12

CH4 = 1.29 = 1.43 35.64

CH4 GWP = 25 **2105.76**

CONOCOPHILLIPS COMPANY
BATTLESHIP CENTRAL FACILITY
40 CFR 60.18 Verification (Flare 2)

Tip Velocity Calculations		
Flare Tip Diameter	12	Inches
Flare Tip Diameter	1.00	ft
Area of Flare Tip	0.785	ft^2
Gas Flow Rate	27,000,000	SCFD
Gas Flow Rate	1,125,000	SCF/Hr
Gas Flow Rate	312.50	SCF/Sec
Maximum Tip Velocity	397.89	ft/Sec
Heating Value	> 1000	BTU/SCF

CONOCOPHILLIPS COMPANY
BATTLESHIP CENTRAL FACILITY
40 CFR 60.18 Verification (Flare 3)

Tip Velocity Calculations		
Flare Tip Diameter	12	Inches
Flare Tip Diameter	1.00	ft
Area of Flare Tip	0.785	ft^2
Gas Flow Rate	27,000,000	SCFD
Gas Flow Rate	1,125,000	SCF/Hr
Gas Flow Rate	312.50	SCF/Sec
Maximum Tip Velocity	397.89	ft/Sec
Heating Value	> 1000	BTU/SCF

CONOCOPHILLIPS COMPANY
ZIA HILLS CENTRAL FACILITY
OVERHEAD SCRUBBER GAS

Component	Mole %	Weight %
H2S	0.0000	0.0000
Nitrogen	0.2615	0.2181
Methane	38.2090	18.2460
Carbon Dioxide	0.0878	0.1150
Ethane	20.3823	18.2433
Propane	19.6881	25.8421
i-Butane	3.7143	6.4262
n-Butane	8.3270	14.4065
i-Pentane	1.8030	3.8722
n-Pentane	2.0102	4.3172
i-Hexane	0.4948	1.2693
n-Hexane	0.3678	0.9434
2,2,4-Trimethylpentane	0.0001	0.0003
Cyclohexane	0.1600	0.4009
Benzene	0.0207	0.0482
i-Heptane	0.4142	1.2355
n-Heptane	0.1620	0.4833
Toluene	0.0434	0.1191
n-Octane	0.4290	1.4588
Ethylbenzene	0.0043	0.0135
meta-Xylene	0.0595	0.1882
n-Nonane	0.1069	0.4080
C10+	0.0000	0.0002
TEG	0.0000	0.0000
Water	3.2540	1.7449
Methanol	0.0000	0.0000
Total	100.00	100.00

Molecular Weight	33.59
Btu Content (Btu/scf)	1908.74
Non-Methane Hydrocarbons (Weight %)	79.68
VOCs (Weight %)	61.43
HAPs (Weight %)	1.31

[1]**Data obatained from Promax.**

CONOCOPHILLIPS COMPANY

ZIA HILLS CENTRAL FACILITY

OVERHEAD GAS SCRUBBER (OHS) EMISSIONS

Component	Uncontrolled Stream			Controlled Stream (Normal Operations)		Controlled Stream (VRU Downtime - 100% Flared)	
	Max lb/hr	lb/hr	TPY	lb/hr	TPY	lb/hr	TPY
H2S	0.000	0.000	0.000	0.000	0.000	0.000	0.000
Nitrogen	6.800	5.440	23.826	0.000	0.000	6.800	0.715
Methane	568.860	455.088	1993.287	0.000	0.000	11.377	1.196
Carbon Dioxide	3.585	2.868	12.563	0.000	0.000	3.585	0.377
Ethane	568.776	455.021	1992.992	0.000	0.000	11.376	1.196
Propane	805.689	644.551	2823.133	0.000	0.000	16.114	1.694
i-Butane	200.351	160.281	702.029	0.000	0.000	4.007	0.421
n-Butane	449.157	359.326	1573.847	0.000	0.000	8.983	0.944
i-Pentane	120.724	96.579	423.017	0.000	0.000	2.414	0.254
n-Pentane	134.599	107.680	471.637	0.000	0.000	2.692	0.283
i-Hexane	39.573	31.658	138.662	0.000	0.000	0.791	0.083
n-Hexane	29.413	23.530	103.062	0.000	0.000	0.588	0.062
2,2,4-Trimethylpentane	0.009	0.007	0.031	0.000	0.000	0.000	0.000
Cyclohexane	12.499	9.999	43.796	0.000	0.000	0.250	0.026
Benzene	1.502	1.202	5.263	0.000	0.000	0.030	0.003
i-Heptane	38.518	30.815	134.968	0.000	0.000	0.770	0.081
n-Heptane	15.067	12.054	52.795	0.000	0.000	0.301	0.032
Toluene	3.713	2.971	13.011	0.000	0.000	0.074	0.008
n-Octane	45.482	36.385	159.367	0.000	0.000	0.910	0.096
Ethylbenzene	0.420	0.336	1.470	0.000	0.000	0.008	0.001
meta-Xylene	5.867	4.693	20.557	0.000	0.000	0.117	0.012
n-Nonane	12.721	10.177	44.574	0.000	0.000	0.254	0.027
C10+	0.007	0.006	0.025	0.000	0.000	0.000	0.000
TEG	0.000	0.000	0.000	0.000	0.000	0.000	0.000
Water	54.403	43.522	190.628	0.000	0.000	54.403	5.719
Methanol	0.000	0.000	0.000	0.000	0.000	0.000	0.000

Component	Uncontrolled Stream			Controlled Stream (Normal Operations)		Controlled Stream (VRU Downtime - 100% Flared)	
	Max lb/hr	lb/hr	TPY	lb/hr	TPY	lb/hr	TPY
VOC TOTAL	1915.31	1532.25	6711.24	0.00	0.00	38.31	4.03
HAP TOTAL	40.92	32.74	143.39	0.00	0.00	0.82	0.09

[1] Uncontrolled emissions estimated using Promax. Tank vapors are controlled using a redundant VRU system and FL2/FL3. Maximum hourly rates include a 25% operational safety factor.

[2] Controlled Emissions = Uncontrolled Emissions * (1 - VRU Efficiency) * (1 - Flare Destruction Efficiency)

[3] Annual controlled rate calculated by multiplying hourly emission rate by 8760 hours minus VRU downtime hours.

VRU Collection Efficiency	**100%**
VRU Downtime	3.0%
Downtime Hours	263
Flare Destruction Efficiency	**98%**

CONOCOPHILLIPS COMPANY

ZIA HILLS CENTRAL FACILITY

OVERHEAD GAS SCRUBBER (OHS) TO FLARE DURING VRU1/VRU2 DOWNTIME

Total Gas Production - SCF/Day	676,182
Total Gas Production - SCF/Hr (Includes 25% Safety Factor)	35,218
Total Gas Production - SCF/Year	7,404,195
Duration - Hours/Year (VRU Downtime)	263
Heating Value - BTU/SCF	1908.7

Component	Emission Rate (lb/hr)	Emission Rate (TPY)
CO[1]	18.52	1.95
NOx[1]	9.28	0.98
SO_2[2]	0.00	0.00
H2S[2]	0.00	0.00
$PM_{10 \& 2.5}$[3]	0.27	0.03

[1] The CO and NOx emission factors of 0.2755 and 0.138 lb/MMBtu are based on TCEQ document RG-360A/11 (February 2012)

[2] H2S/SO2 example calculation: SCF/day * 14.7 / 10.73 / 528 * H2S Wt% * Gas MW. SO2 is calculated assuming MW ratio of 64.07:34.08.

[3] PM 10 & 2.5 emissions are based on AP-42, Section 1.4.

CONOCOPHILLIPS COMPANY
ZIA HILLS CENTRAL FACILITY
VAPOR RECOVERY TOWER GAS

Component	Mole %	Weight %
H2S	0.0000	0.0000
Nitrogen	0.0000	0.0000
Methane	0.4429	0.1299
Carbon Dioxide	0.0237	0.0191
Ethane	13.1225	7.2140
Propane	32.1836	25.9460
i-Butane	8.6427	9.1841
n-Butane	23.2143	24.6683
i-Pentane	6.2015	8.1803
n-Pentane	7.1048	9.3718
i-Hexane	2.5344	3.9931
n-Hexane	1.8830	2.9667
2,2,4-Trimethylpentane	0.0124	0.0258
Cyclohexane	0.0000	0.0000
Benzene	0.1124	0.1606
i-Heptane	2.1358	3.9126
n-Heptane	0.6613	1.2114
Toluene	0.1763	0.2970
n-Octane	0.9242	1.9301
Ethylbenzene	0.0160	0.0311
meta-Xylene	0.0707	0.1373
n-Nonane	0.2200	0.5158
C10+	0.0001	0.0005
TEG	0.0000	0.0000
Water	0.3174	0.1045
Methanol	0.0000	0.0000
Total	100.00	100.00

Molecular Weight	54.70
Btu Content (Btu/scf)	3071.12
Non-Methane Hydrocarbons (Weight %)	99.75
VOCs (Weight %)	92.53
HAPs (Weight %)	3.62

[1]**Data obatained from Promax.**

CONOCOPHILLIPS COMPANY

ZIA HILLS CENTRAL FACILITY

VAPOR RECOVERY TOWER (VRT) EMISSIONS

Component	Uncontrolled Stream			Controlled Stream (Normal Operations)		Controlled Stream (VRU Downtime - 100% Flared)	
	Max lb/hr	lb/hr	TPY	lb/hr	TPY	lb/hr	TPY
H2S	0.000	0.000	0.000	0.000	0.000	0.000	0.000
Nitrogen	0.000	0.000	0.000	0.000	0.000	0.000	0.000
Methane	0.609	0.487	2.135	0.000	0.000	0.012	0.001
Carbon Dioxide	0.089	0.072	0.313	0.000	0.000	0.089	0.009
Ethane	33.837	27.070	118.566	0.000	0.000	0.677	0.071
Propane	121.699	97.360	426.435	0.000	0.000	2.434	0.256
i-Butane	43.078	34.462	150.944	0.000	0.000	0.862	0.091
n-Butane	115.706	92.565	405.434	0.000	0.000	2.314	0.243
i-Pentane	38.369	30.696	134.447	0.000	0.000	0.767	0.081
n-Pentane	43.958	35.167	154.031	0.000	0.000	0.879	0.092
i-Hexane	18.729	14.984	65.628	0.000	0.000	0.375	0.039
n-Hexane	13.915	11.132	48.759	0.000	0.000	0.278	0.029
2,2,4-Trimethylpentane	0.121	0.097	0.425	0.000	0.000	0.002	0.000
Cyclohexane	0.000	0.000	0.000	0.000	0.000	0.000	0.000
Benzene	0.753	0.602	2.639	0.000	0.000	0.015	0.002
i-Heptane	18.352	14.682	64.306	0.000	0.000	0.367	0.039
n-Heptane	5.682	4.546	19.910	0.000	0.000	0.114	0.012
Toluene	1.393	1.114	4.881	0.000	0.000	0.028	0.003
n-Octane	9.053	7.243	31.722	0.000	0.000	0.181	0.019
Ethylbenzene	0.146	0.117	0.511	0.000	0.000	0.003	0.000
meta-Xylene	0.644	0.515	2.257	0.000	0.000	0.013	0.001
n-Nonane	2.419	1.935	8.477	0.000	0.000	0.048	0.005
C10+	0.002	0.002	0.008	0.000	0.000	0.000	0.000
TEG	0.000	0.000	0.000	0.000	0.000	0.000	0.000
Water	0.490	0.392	1.718	0.000	0.000	0.490	0.052
Methanol	0.000	0.000	0.000	0.000	0.000	0.000	0.000

Component	Uncontrolled Stream			Controlled Stream (Normal Operations)		Controlled Stream (VRU Downtime - 100% Flared)	
	Max lb/hr	lb/hr	TPY	lb/hr	TPY	lb/hr	TPY
VOC TOTAL	434.02	347.22	1520.81	0.00	0.00	8.68	0.91
HAP TOTAL	16.97	13.58	59.47	0.00	0.00	0.34	0.04

[1] Uncontrolled emissions estimated using Promax. Tank vapors are controlled using a redundant VRU system and FL2/FL3. Maximum hourly rates include a 25% operational safety factor.

[2] Controlled Emissions = Uncontrolled Emissions * (1 - VRU Efficiency) * (1 - Flare Destruction Efficiency)

[3] Annual controlled rate calculated by multiplying hourly emission rate by 8760 hours minus VRU downtime hours.

VRU Collection Efficiency	**100%**
VRU Downtime	3.0%
Downtime Hours	263
Flare Destruction Efficiency	**98%**

CONOCOPHILLIPS COMPANY

ZIA HILLS CENTRAL FACILITY

VAPOR RECOVERY TOWER GAS (VRT) TO FLARE DURING VRU1/VRU2 DOWNTIME

Total Gas Production - SCF/Day (Includes flashing/W&B)	62,482
Total Gas Production - SCF/Hr (Includes 25% Safety Factor)	3,254
Total Gas Production - SCF/Year	684,176
Duration -Hours/Year (VRU Downtime)	263
Heating Value - BTU/SCF (Promax - Highest of Flash/W&B)	3071.1

Component	Emission Rate (lb/hr)	Emission Rate (TPY)
CO[1]	2.75	0.29
NOx[1]	1.38	0.14
SO_2[2]	0.00	0.00
H2S[2]	0.00	0.00
$PM_{10 \& 2.5}$[3]	0.02	0.00

[1] The CO and NOx emission factors of 0.2755 and 0.138 lb/MMBtu are based on TCEQ document RG-360A/11 (February 2012)

[2] H2S/SO2 example calculation: SCF/day * 14.7 / 10.73 / 528 * H2S Wt% * Gas MW. SO2 is calculated assuming MW ratio of 64.07:34.08.

[3] PM 10 & 2.5 emissions are based on AP-42, Section 1.4.

CONOCOPHILLIPS COMPANY
ZIA HILLS CENTRAL FACILITY
WATER DEGAS VESSEL GAS

Component	Mole %	Weight %
H2S	0.0000	0.0000
Nitrogen	0.0859	0.0558
Methane	18.8701	7.0203
Carbon Dioxide	0.0768	0.0784
Ethane	13.3100	9.2813
Propane	16.4005	16.7713
i-Butane	4.1890	5.6464
n-Butane	11.6963	15.7654
i-Pentane	4.2536	7.1171
n-Pentane	5.4251	9.0771
i-Hexane	2.5303	5.0567
n-Hexane	2.0511	4.0991
2,2,4-Trimethylpentane	0.0159	0.0422
Cyclohexane	0.0000	0.0001
Benzene	0.0684	0.1239
i-Heptane	2.6480	6.1532
n-Heptane	0.8613	2.0015
Toluene	0.1860	0.3973
n-Octane	1.3295	3.5219
Ethylbenzene	0.0214	0.0527
meta-Xylene	0.0969	0.2385
n-Nonane	0.3373	1.0032
C10+	0.0002	0.0014
TEG	0.0000	0.0000
Water	15.5462	6.4950
Methanol	0.0000	0.0000
Total	100.00	100.00

Molecular Weight	43.12
Btu Content (Btu/scf)	2286.17
Non-Methane Hydrocarbons (Weight %)	86.35
VOCs (Weight %)	77.07
HAPs (Weight %)	4.95

[1]**Data obatained from Promax.**

CONOCOPHILLIPS COMPANY

ZIA HILLS CENTRAL FACILITY

WATER DEGAS VESSEL (WDGV1) EMISSIONS

Component	Uncontrolled Stream			Controlled Stream (Normal Operations)		Controlled Stream (VRU Downtime - 100% Flared)	
	Max lb/hr	lb/hr	TPY	lb/hr	TPY	lb/hr	TPY
H2S	0.000	0.000	0.000	0.000	0.000	0.000	0.000
Nitrogen	0.249	0.199	0.873	0.000	0.000	0.249	0.026
Methane	31.341	25.073	109.819	0.000	0.000	0.627	0.066
Carbon Dioxide	0.350	0.280	1.226	0.000	0.000	0.350	0.037
Ethane	41.435	33.148	145.188	0.000	0.000	0.829	0.087
Propane	74.873	59.898	262.353	0.000	0.000	1.497	0.157
i-Butane	25.207	20.166	88.326	0.000	0.000	0.504	0.053
n-Butane	70.382	56.305	246.618	0.000	0.000	1.408	0.148
i-Pentane	31.773	25.418	111.332	0.000	0.000	0.635	0.067
n-Pentane	40.523	32.419	141.994	0.000	0.000	0.810	0.085
i-Hexane	22.575	18.060	79.101	0.000	0.000	0.451	0.047
n-Hexane	18.300	14.640	64.123	0.000	0.000	0.366	0.038
2,2,4-Trimethylpentane	0.189	0.151	0.661	0.000	0.000	0.004	0.000
Cyclohexane	0.000	0.000	0.001	0.000	0.000	0.000	0.000
Benzene	0.553	0.442	1.938	0.000	0.000	0.011	0.001
i-Heptane	27.470	21.976	96.255	0.000	0.000	0.549	0.058
n-Heptane	8.936	7.148	31.310	0.000	0.000	0.179	0.019
Toluene	1.774	1.419	6.216	0.000	0.000	0.035	0.004
n-Octane	15.723	12.578	55.093	0.000	0.000	0.314	0.033
Ethylbenzene	0.235	0.188	0.825	0.000	0.000	0.005	0.000
meta-Xylene	1.065	0.852	3.731	0.000	0.000	0.021	0.002
n-Nonane	4.479	3.583	15.693	0.000	0.000	0.090	0.009
C10+	0.006	0.005	0.021	0.000	0.000	0.000	0.000
TEG	0.000	0.000	0.000	0.000	0.000	0.000	0.000
Water	28.996	23.197	101.601	0.000	0.000	28.996	3.048
Methanol	0.000	0.000	0.000	0.000	0.000	0.000	0.000

Component	Uncontrolled Stream			Controlled Stream (Normal Operations)		Controlled Stream (VRU Downtime - 100% Flared)	
	Max lb/hr	lb/hr	TPY	lb/hr	TPY	lb/hr	TPY
VOC TOTAL	344.06	275.25	1205.59	0.00	0.00	6.88	0.72
HAP TOTAL	22.12	17.69	77.49	0.00	0.00	0.44	0.05

[1] Uncontrolled emissions estimated using Promax. Tank vapors are controlled using a redundant VRU system and FL2/FL3. Maximum hourly rates include a 25% operational safety factor.

[2] Controlled Emissions = Uncontrolled Emissions * (1 - VRU Efficiency) * (1 - Flare Destruction Efficiency)

[3] Annual controlled rate calculated by multiplying hourly emission rate by 8760 hours minus VRU downtime hours.

VRU Collection Efficiency	**100%**
VRU Downtime	3.0%
Downtime Hours	263
Flare Destruction Efficiency	**98%**

CONOCOPHILLIPS COMPANY

ZIA HILLS CENTRAL FACILITY

WATER DEGAS VESSEL (WDGV1) TO FLARE DURING VRU1/VRU2 DOWNTIME

Total Gas Production - SCF/Day (Includes flashing/W&B)	75,433
Total Gas Production - SCF/Hr (Includes 25% Safety Factor)	3,929
Total Gas Production - SCF/Year	825,996
Duration -Hours/Year (VRU Downtime)	263
Heating Value - BTU/SCF (Promax - Highest of Flash/W&B)	2286.2

Component	Emission Rate (lb/hr)	Emission Rate (TPY)
CO[1]	2.47	0.26
NOx[1]	1.24	0.13
SO_2[2]	0.00	0.00
H2S[2]	0.00	0.00
$PM_{10 \& 2.5}$[3]	0.03	0.00

[1] The CO and NOx emission factors of 0.2755 and 0.138 lb/MMBtu are based on TCEQ document RG-360A/11 (February 2012)

[2] H2S/SO2 example calculation: SCF/day * 14.7 / 10.73 / 528 * H2S Wt% * Gas MW. SO2 is calculated assuming MW ratio of 64.07:34.08.

[3] PM 10 & 2.5 emissions are based on AP-42, Section 1.4.

CONOCOPHILLIPS COMPANY
ZIA HILLS CENTRAL FACILITY
STORAGE TANK EMISSIONS SUMMARY

Emission Unit	Unit Description	Tank Controlled (Yes/No)	Control Type	Material Throughput (bbls/day)	Material Type (Oil/Produced Water)	VOC (lb/hr)	VOC (TPY)
OT1	**Condensate Storage Tank**	Yes	Flare	4500	OIL	0.81	0.08
OT2	**Condensate Storage Tank**	Yes	Flare	4500	OIL	0.81	0.08
OT3	**Condensate Storage Tank**	Yes	Flare	4500	OIL	0.81	0.08
OT4	**Condensate Storage Tank**	Yes	Flare	4500	OIL	0.81	0.08
OT5	**Off-Spec Condensate Storage Tank**	Yes	Flare	593	OIL	8.67	0.91
GB1	**Water Gun Barrel**	Yes	Flare	15221	WATER	0.66	0.09
GB2	**Water Gun Barrel**	Yes	Flare	15221	WATER	0.66	0.09
ST1	**Slop Tank**	Yes	Flare	127	OIL	0.04	0.01
ST2	**Slop Tank**	Yes	Flare	127	OIL	0.04	0.01
WT1	**Water Storage Tank**	Yes	Flare	3721	WATER	0.02	0.00
WT2	**Water Storage Tank**	Yes	Flare	3721	WATER	0.02	0.00
WT3	**Water Storage Tank**	Yes	Flare	3721	WATER	0.02	0.00
WT4	**Water Storage Tank**	Yes	Flare	3721	WATER	0.02	0.00
WT5	**Water Storage Tank**	Yes	Flare	3721	WATER	0.02	0.00
WT6	**Water Storage Tank**	Yes	Flare	3721	WATER	0.02	0.00
WT7	**Water Storage Tank**	Yes	Flare	3721	WATER	0.02	0.00
WT8	**Water Storage Tank**	Yes	Flare	3721	WATER	0.02	0.00
Storage Tank Emissions						13.44	1.45

[1] Since the vapor recovery unit captures 100% of the gas, normal operations are not represented here. During VRU downtime, tank vapors are routed to the flare.

CONOCOPHILLIPS COMPANY

ZIA HILLS CENTRAL FACILITY

CONDENSATE STORAGE TANKS (OT1-OT4) - EMISSIONS SUMMARY

Emission Component	Uncontrolled W&B Stream			Uncontrolled Flash Stream			Stream Controlled By Redundant VRU - Normal Operations		Stream Controlled By Flare - VRU Downtime	
	Max lb/hr	lb/hr	TPY	Max lb/hr	lb/hr	TPY	lb/hr	TPY	lb/hr	TPY
H2S	0.000	0.000	0.000	0.000	0.000	0.000	0.000	0.000	0.000	0.000
Nitrogen	0.000	0.000	0.000	0.000	0.000	0.000	0.000	0.000	0.000	0.000
Methane	0.037	0.030	0.130	0.075	0.060	0.263	0.000	0.000	0.002	0.000
Carbon Dioxide	0.018	0.015	0.065	0.012	0.010	0.042	0.000	0.000	0.030	0.003
Ethane	10.778	8.622	37.764	4.741	3.793	16.614	0.000	0.000	0.310	0.033
Propane	32.992	26.394	115.604	17.464	13.971	61.195	0.000	0.000	1.009	0.106
i-Butane	10.017	8.014	35.100	6.220	4.976	21.793	0.000	0.000	0.325	0.034
n-Butane	25.883	20.706	90.693	16.728	13.382	58.614	0.000	0.000	0.852	0.090
i-Pentane	8.073	6.458	28.288	5.557	4.446	19.471	0.000	0.000	0.273	0.029
n-Pentane	9.018	7.215	31.601	6.368	5.094	22.313	0.000	0.000	0.308	0.032
i-Hexane	3.633	2.907	12.731	2.714	2.172	9.511	0.000	0.000	0.127	0.013
n-Hexane	2.690	2.152	9.427	2.017	1.613	7.067	0.000	0.000	0.094	0.010
2,2,4-Trimethylpentane	0.021	0.017	0.073	0.018	0.014	0.062	0.000	0.000	0.001	0.000
Cyclohexane	0.000	0.000	0.000	0.000	0.000	0.000	0.000	0.000	0.000	0.000
Benzene	0.098	0.079	0.345	0.109	0.087	0.382	0.000	0.000	0.004	0.000
i-Heptane	3.149	2.519	11.033	2.660	2.128	9.320	0.000	0.000	0.116	0.012
n-Heptane	0.963	0.770	3.374	0.823	0.659	2.885	0.000	0.000	0.036	0.004
Toluene	0.177	0.142	0.622	0.202	0.162	0.707	0.000	0.000	0.008	0.001
n-Octane	1.348	1.079	4.725	1.312	1.049	4.596	0.000	0.000	0.053	0.006
Ethylbenzene	0.018	0.015	0.064	0.021	0.017	0.074	0.000	0.000	0.001	0.000
meta-Xylene	0.078	0.063	0.274	0.093	0.075	0.327	0.000	0.000	0.003	0.000
n-Nonane	0.272	0.218	0.954	0.350	0.280	1.228	0.000	0.000	0.012	0.001
C10+	0.000	0.000	0.001	0.000	0.000	0.001	0.000	0.000	0.000	0.000
TEG	0.000	0.000	0.000	0.000	0.000	0.000	0.000	0.000	0.000	0.000
Water	0.000	0.000	0.001	0.068	0.054	0.238	0.000	0.000	0.068	0.007
Methanol	0.000	0.000	0.000	0.000	0.000	0.000	0.000	0.000	0.000	0.000

Component	Uncontrolled W&B Stream			Uncontrolled Flash Stream			Stream Controlled By Redundant VRU - Normal Operations		Stream Controlled By Flare - VRU Downtime	
	Max lb/hr	lb/hr	TPY	Max lb/hr	lb/hr	TPY	lb/hr	TPY	lb/hr	TPY
VOC TOTAL	98.43	78.75	344.91	62.66	50.12	219.55	0.00	0.00	3.22	0.34
HAP TOTAL	3.08	2.47	10.81	2.46	1.97	8.62	0.00	0.00	0.11	0.01

[1] Uncontrolled emissions estimated using Promax. Tank vapors are controlled using a redundant VRU system and FL2/FL3. Maximum hourly rates include a 25% operational safety factor.

[2] Controlled Emissions = Uncontrolled Emissions * (1 - VRU Efficiency) * (1 - Flare Destruction Efficiency)

[3] Annual controlled rate calculated by multiplying hourly emission rate by 8760 hours minus VRU downtime hours.

VRU Collection Efficiency	100%
VRU Downtime	3.0%
VRU Downtime (Hours)	263
Flare Destruction Efficiency	98%

CONOCOPHILLIPS COMPANY

ZIA HILLS CENTRAL FACILITY

CONDENSATE STORAGE TANK (OT1-OT4) VAPORS TO FLARE DURING VRU DOWNTIME

Total Gas Production - SCF/Day (Includes flashing/W&B)	24,247
Total Gas Production - SCF/Hr (Includes 25% Safety Factor)	1,263
Total Gas Production - SCF/Year	265,500
Duration -Hours/Year (VRU Downtime)	263
Heating Value - BTU/SCF (Promax - Highest of Flash/W&B)	3080.2

Component	Emission Rate (lb/hr)	Emission Rate (TPY)
CO[1]	1.07	0.11
NOx[1]	0.54	0.06
SO_2[2]	0.00	0.00
H2S[2]	0.00	0.00
$PM_{10 \& 2.5}$[3]	0.01	0.00

[1] The CO and NOx emission factors of 0.2755 and 0.138 lb/MMBtu are based on TCEQ document RG-360A/11 (February 2012)

[2] H2S/SO2 example calculation: SCF/day * 14.7 / 10.73 / 528 * H2S Wt% * Gas MW. SO2 is calculated assuming MW ratio of 64.07:34.08.

[3] PM 10 & 2.5 emissions are based on AP-42, Section 1.4.

CONOCOPHILLIPS COMPANY

ZIA HILLS CENTRAL FACILITY

OFF-SPEC OIL STORAGE TANK (OT5) - EMISSIONS SUMMARY

Component	Uncontrolled W&B Stream			Uncontrolled Flash Stream			Stream Controlled By Redundant VRU - Normal Operations		Stream Controlled By Flare - VRU Downtime	
	Max lb/hr	lb/hr	TPY	Max lb/hr	lb/hr	TPY	lb/hr	TPY	lb/hr	TPY
H2S	0.000	0.000	0.000	0.000	0.000	0.000	0.000	0.000	0.000	0.000
Nitrogen	0.000	0.000	0.000	0.022	0.018	0.078	0.000	0.000	0.022	0.002
Methane	0.098	0.079	0.344	5.578	4.463	19.546	0.000	0.000	0.114	0.012
Carbon Dioxide	0.005	0.004	0.018	0.082	0.065	0.286	0.000	0.000	0.087	0.009
Ethane	2.317	1.853	8.118	25.666	20.533	89.934	0.000	0.000	0.560	0.059
Propane	6.243	4.995	21.877	92.965	74.372	325.749	0.000	0.000	1.984	0.209
i-Butane	1.922	1.538	6.734	38.842	31.073	136.102	0.000	0.000	0.815	0.086
n-Butane	4.662	3.729	16.335	104.563	83.650	366.388	0.000	0.000	2.184	0.230
i-Pentane	1.424	1.139	4.989	39.401	31.521	138.060	0.000	0.000	0.816	0.086
n-Pentane	1.596	1.277	5.593	47.259	37.807	165.596	0.000	0.000	0.977	0.103
i-Hexane	0.503	0.402	1.762	17.436	13.949	61.097	0.000	0.000	0.359	0.038
n-Hexane	0.375	0.300	1.312	13.552	10.841	47.485	0.000	0.000	0.279	0.029
2,2,4-Trimethylpentane	0.001	0.001	0.003	0.035	0.028	0.122	0.000	0.000	0.001	0.000
Cyclohexane	0.095	0.076	0.333	4.426	3.540	15.507	0.000	0.000	0.090	0.010
Benzene	0.013	0.011	0.046	0.700	0.560	2.451	0.000	0.000	0.014	0.001
i-Heptane	0.437	0.350	1.533	18.839	15.071	66.010	0.000	0.000	0.386	0.041
n-Heptane	0.159	0.127	0.558	7.141	5.713	25.023	0.000	0.000	0.146	0.015
Toluene	0.030	0.024	0.104	1.772	1.417	6.208	0.000	0.000	0.036	0.004
n-Octane	0.371	0.297	1.301	20.184	16.147	70.724	0.000	0.000	0.411	0.043
Ethylbenzene	0.003	0.003	0.011	0.204	0.164	0.716	0.000	0.000	0.004	0.000
meta-Xylene	0.037	0.030	0.130	2.468	1.974	8.647	0.000	0.000	0.050	0.005
n-Nonane	0.076	0.061	0.267	5.798	4.638	20.315	0.000	0.000	0.117	0.012
C10+	0.000	0.000	0.000	0.004	0.003	0.014	0.000	0.000	0.000	0.000
TEG	0.000	0.000	0.000	0.000	0.000	0.000	0.000	0.000	0.000	0.000
Water	0.000	0.000	0.000	1.653	1.322	5.792	0.000	0.000	1.653	0.174
Methanol	0.000	0.000	0.000	0.000	0.000	0.000	0.000	0.000	0.000	0.000

Component	Uncontrolled W&B Stream			Uncontrolled Flash Stream			Stream Controlled By Redundant VRU - Normal Operations		Stream Controlled By Flare - VRU Downtime	
	Max lb/hr	lb/hr	TPY	Max lb/hr	lb/hr	TPY	lb/hr	TPY	lb/hr	TPY
VOC TOTAL	17.95	14.36	62.89	415.59	332.47	1456.22	0.00	0.00	8.67	0.91
HAP TOTAL	0.46	0.37	1.61	18.73	14.98	65.63	0.00	0.00	0.38	0.04

[1] Uncontrolled emissions estimated using Promax. Tank vapors are controlled using a redundant VRU system and FL2/FL3. Maximum hourly rates include a 25% operational safety factor.

[2] Controlled Emissions = Uncontrolled Emissions * (1 - VRU Efficiency) * (1 - Flare Destruction Efficiency)

[3] Annual controlled rate calculated by multiplying hourly emission rate by 8760 hours minus VRU downtime hours.

VRU Collection Efficiency	100%
VRU Downtime	3%
VRU Downtime (Hours)	263
Flare Destruction Efficiency	98%

CONOCOPHILLIPS COMPANY

ZIA HILLS CENTRAL FACILITY

OFF-SPEC STORAGE TANK (OT5) VAPORS TO FLARE DURING VRU DOWNTIME

Total Gas Production - SCF/Day (Includes flashing/W&B)	61,359
Total Gas Production - SCF/Hr (Includes 25% Safety Factor)	3,196
Total Gas Production - SCF/Year	671,883
Duration -Hours/Year (VRU Downtime)	263
Heating Value - BTU/SCF (Promax - Highest of Flash/W&B)	3124.5

Component	Emission Rate (lb/hr)	Emission Rate (TPY)
CO[1]	2.75	0.29
NOx[1]	1.38	0.14
SO_2[2]	0.00	0.00
H2S[2]	0.00	0.00
$PM_{10 \& 2.5}$[3]	0.02	0.00

[1] The CO and NOx emission factors of 0.2755 and 0.138 lb/MMBtu are based on TCEQ document RG-360A/11 (February 2012)

[2] H2S/SO2 example calculation: SCF/day * 14.7 / 10.73 / 528 * H2S Wt% * Gas MW. SO2 is calculated assuming MW ratio of 64.07:34.08.

[3] PM 10 & 2.5 emissions are based on AP-42, Section 1.4.

CONOCOPHILLIPS COMPANY

ZIA HILLS CENTRAL FACILITY

SLOP OIL TANKS (ST1-T2) - EMISSIONS SUMMARY

Component	Uncontrolled W&B Stream		Uncontrolled Flash Stream		Stream Controlled By Redundant VRU - Normal Operations		Stream Controlled By Flare - VRU Downtime	
	lb/hr	TPY	lb/hr	TPY	lb/hr	TPY	lb/hr	TPY
H2S	0.000	0.000	0.000	0.000	0.000	0.000	0.000	0.000
Nitrogen	0.000	0.001	0.000	0.000	0.000	0.000	0.000	0.000
Methane	0.082	0.359	0.000	0.000	0.000	0.000	0.002	0.000
Carbon Dioxide	0.003	0.015	0.000	0.000	0.000	0.000	0.003	0.000
Ethane	0.573	2.508	0.000	0.000	0.000	0.000	0.011	0.002
Propane	1.017	4.452	0.000	0.000	0.000	0.000	0.020	0.003
i-Butane	0.300	1.313	0.000	0.000	0.000	0.000	0.006	0.001
n-Butane	0.807	3.536	0.000	0.000	0.000	0.000	0.016	0.002
i-Pentane	0.348	1.523	0.000	0.000	0.000	0.000	0.007	0.001
n-Pentane	0.434	1.900	0.000	0.000	0.000	0.000	0.009	0.001
i-Hexane	0.229	1.005	0.000	0.000	0.000	0.000	0.005	0.001
n-Hexane	0.185	0.809	0.000	0.000	0.000	0.000	0.004	0.000
2,2,4-Trimethylpentane	0.002	0.007	0.000	0.000	0.000	0.000	0.000	0.000
Cyclohexane	0.000	0.000	0.000	0.000	0.000	0.000	0.000	0.000
Benzene	0.004	0.017	0.000	0.000	0.000	0.000	0.000	0.000
i-Heptane	0.247	1.083	0.000	0.000	0.000	0.000	0.005	0.001
n-Heptane	0.079	0.348	0.000	0.000	0.000	0.000	0.002	0.000
Toluene	0.012	0.053	0.000	0.000	0.000	0.000	0.000	0.000
n-Octane	0.125	0.545	0.000	0.000	0.000	0.000	0.002	0.000
Ethylbenzene	0.002	0.007	0.000	0.000	0.000	0.000	0.000	0.000
meta-Xylene	0.007	0.030	0.000	0.000	0.000	0.000	0.000	0.000
n-Nonane	0.026	0.113	0.000	0.000	0.000	0.000	0.001	0.000
C10+	0.000	0.000	0.000	0.000	0.000	0.000	0.000	0.000
TEG	0.000	0.000	0.000	0.000	0.000	0.000	0.000	0.000
Water	0.001	0.003	0.000	0.000	0.000	0.000	0.001	0.000
Methanol	0.000	0.000	0.000	0.000	0.000	0.000	0.000	0.000

Component	Uncontrolled W&B Stream		Uncontrolled Flash Stream		Stream Controlled By Redundant VRU - Normal Operations		Stream Controlled By Flare - VRU Downtime	
	lb/hr	TPY	lb/hr	TPY	lb/hr	TPY	lb/hr	TPY
VOC TOTAL	3.82	16.74	0.00	0.00	0.00	0.00	0.08	0.01
HAP TOTAL	0.21	0.92	0.00	0.00	0.00	0.00	0.00	0.00

[1] Uncontrolled emissions estimated using Promax. Tank vapors are controlled using a redundant VRU system and FL2/FL3. Maximum hourly rates include a 25% operational safety factor.

[2] Controlled Emissions = Uncontrolled Emissions * (1 - VRU Efficiency) * (1 - Flare Destruction Efficiency)

[3] Annual controlled rate calculated by multiplying hourly emission rate by 8760 hours minus VRU downtime hours.

VRU Collection Efficiency	100%
VRU Downtime	3%
VRU Downtime (Hours)	263
Flare Destruction Efficiency	98%

CONOCOPHILLIPS COMPANY

ZIA HILLS CENTRAL FACILITY

SLOP TANK GAS TO FLARE DURING NORMAL OPERATION

Total Gas Production - SCF/Day (Includes W&B from water tanks)	791
Total Gas Production - SCF/Hr (Includes 25% Safety Factor)	41
Total Gas Production - SCF/Year	8,660
Duration -Hours/Year (VRU Downtime)	263
Heating Value - BTU/SCF (Promax)	2907.5

Component	Emission Rate (lb/hr)	Emission Rate (TPY)
CO[1]	0.03	0.00
NOx[1]	0.02	0.00
SO_2[2]	0.00	0.00
H2S[2]	0.00	0.00
$PM_{10 \& 2.5}$[3]	0.00	0.00

[1] The CO and NOx emission factors of 0.2755 and 0.138 lb/MMBtu are based on TCEQ document RG-360A/11 (February 2012)

[2] H2S/SO2 example calculation: SCF/day * 14.7 / 10.73 / 528 * H2S Wt% * Gas MW. SO2 is calculated assuming MW ratio of 64.07:34.08.

[3] PM 10 & 2.5 emissions are based on AP-42, Section 1.4.

CONOCOPHILLIPS COMPANY

ZIA HILLS CENTRAL FACILITY

GUN BARREL SEPARATORS (GB1-GB2) - EMISSIONS SUMMARY

Component	Uncontrolled W&B Stream		Uncontrolled Flash Stream		Stream Controlled By Redundant VRU - Normal Operations		Stream Controlled By Flare - VRU Downtime	
	lb/hr	TPY	lb/hr	TPY	lb/hr	TPY	lb/hr	TPY
H2S	0.000	0.000	0.000	0.000	0.000	0.000	0.000	0.000
Nitrogen	0.006	0.026	0.002	0.007	0.000	0.000	0.007	0.001
Methane	1.545	6.767	0.219	0.961	0.000	0.000	0.035	0.005
Carbon Dioxide	0.085	0.374	0.003	0.012	0.000	0.000	0.088	0.012
Ethane	3.497	15.316	0.308	1.351	0.000	0.000	0.076	0.010
Propane	10.346	45.315	0.578	2.530	0.000	0.000	0.218	0.029
i-Butane	5.508	24.127	0.199	0.874	0.000	0.000	0.114	0.015
n-Butane	15.216	66.647	0.562	2.461	0.000	0.000	0.316	0.041
i-Pentane	6.419	28.115	0.257	1.125	0.000	0.000	0.134	0.018
n-Pentane	8.014	35.100	0.328	1.437	0.000	0.000	0.167	0.022
i-Hexane	4.241	18.577	0.184	0.804	0.000	0.000	0.088	0.012
n-Hexane	3.327	14.573	0.149	0.653	0.000	0.000	0.070	0.009
2,2,4-Trimethylpentane	0.033	0.142	0.002	0.007	0.000	0.000	0.001	0.000
Cyclohexane	0.000	0.000	0.000	0.000	0.000	0.000	0.000	0.000
Benzene	0.106	0.466	0.005	0.020	0.000	0.000	0.002	0.000
i-Heptane	4.798	21.017	0.224	0.981	0.000	0.000	0.100	0.013
n-Heptane	1.516	6.638	0.073	0.319	0.000	0.000	0.032	0.004
Toluene	0.314	1.373	0.014	0.063	0.000	0.000	0.007	0.001
n-Octane	2.474	10.838	0.128	0.562	0.000	0.000	0.052	0.007
Ethylbenzene	0.038	0.165	0.002	0.008	0.000	0.000	0.001	0.000
meta-Xylene	0.170	0.745	0.009	0.038	0.000	0.000	0.004	0.000
n-Nonane	0.652	2.855	0.037	0.160	0.000	0.000	0.014	0.002
C10+	0.000	0.002	0.000	0.000	0.000	0.000	0.000	0.000
TEG	0.000	0.000	0.000	0.000	0.000	0.000	0.000	0.000
Water	4.397	19.258	0.237	1.036	0.000	0.000	4.633	0.609
Methanol	0.000	0.000	0.000	0.000	0.000	0.000	0.000	0.000

Component	Uncontrolled W&B Stream		Uncontrolled Flash Stream		Stream Controlled By Redundant VRU - Normal Operations		Stream Controlled By Flare - VRU Downtime	
	lb/hr	TPY	lb/hr	TPY	lb/hr	TPY	lb/hr	TPY
VOC TOTAL	63.17	276.70	2.75	12.04	0.00	0.00	1.32	0.17
HAP TOTAL	3.99	17.47	0.18	0.79	0.00	0.00	0.08	0.01

[1] Uncontrolled emissions estimated using Promax. Tank vapors are controlled using a redundant VRU system and FL2/FL3.

[2] Controlled Emissions = Uncontrolled Emissions * (1 - VRU Efficiency) * (1 - Flare Destruction Efficiency)

[3] Annual controlled rate calculated by multiplying hourly emission rate by 8760 hours minus VRU downtime hours.

VRU Collection Efficiency	100%
VRU Downtime	3%
VRU Downtime (Hours)	263
Flare Destruction Efficiency	98%

CONOCOPHILLIPS COMPANY

ZIA HILLS CENTRAL FACILITY

GUN BARREL VAPORS TO FLARE DURING VRU DOWNTIME

Total Gas Production - SCF/Day (Includes gun barrel flashing/W&B)	13,795
Total Gas Production - SCF/Hr (Includes 25% Safety Factor)	719
Total Gas Production - SCF/Year	151,058
Duration -Hours/Year (VRU Downtime)	263
Heating Value - BTU/SCF (Promax - Highest of Flash/W&B)	2672.4

Component	**Emission Rate (lb/hr)**	**Emission Rate (TPY)**
CO[1]	0.53	0.06
NOx[1]	0.26	0.03
SO_2[2]	0.00	0.00
H2S[2]	0.00	0.00
$PM_{10 \& 2.5}$[3]	0.01	0.00

[1] The CO and NOx emission factors of 0.2755 and 0.138 lb/MMBtu are based on TCEQ document RG-360A/11 (February 2012)

[2] H2S/SO2 example calculation: SCF/day * 14.7 / 10.73 / 528 * H2S Wt% * Gas MW. SO2 is calculated assuming MW ratio of 64.07:34.08.

[3] PM 10 & 2.5 emissions are based on AP-42, Section 1.4.

CONOCOPHILLIPS COMPANY

ZIA HILLS CENTRAL FACILITY

PRODUCED WATER TANKS (WT1-WT8) - EMISSIONS SUMMARY

Component	Uncontrolled W&B Stream		Uncontrolled Flash Stream		Stream Controlled By Redundant VRU - Normal Operations		Stream Controlled By Flare - VRU Downtime	
	lb/hr	TPY	lb/hr	TPY	lb/hr	TPY	lb/hr	TPY
H2S	0.000	0.000	0.000	0.000	0.000	0.000	0.000	0.000
Nitrogen	0.004	0.017	0.000	0.000	0.000	0.000	0.004	0.001
Methane	1.133	4.963	0.000	0.000	0.000	0.000	0.023	0.003
Carbon Dioxide	0.103	0.452	0.000	0.000	0.000	0.000	0.103	0.014
Ethane	1.920	8.409	0.000	0.000	0.000	0.000	0.038	0.005
Propane	2.479	10.859	0.000	0.000	0.000	0.000	0.050	0.007
i-Butane	0.456	1.996	0.000	0.000	0.000	0.000	0.009	0.001
n-Butane	2.248	9.847	0.000	0.000	0.000	0.000	0.045	0.006
i-Pentane	0.597	2.614	0.000	0.000	0.000	0.000	0.012	0.002
n-Pentane	0.464	2.032	0.000	0.000	0.000	0.000	0.009	0.001
i-Hexane	0.285	1.249	0.000	0.000	0.000	0.000	0.006	0.001
n-Hexane	0.129	0.564	0.000	0.000	0.000	0.000	0.003	0.000
2,2,4-Trimethylpentane	0.001	0.003	0.000	0.000	0.000	0.000	0.000	0.000
Cyclohexane	0.000	0.000	0.000	0.000	0.000	0.000	0.000	0.000
Benzene	0.141	0.617	0.000	0.000	0.000	0.000	0.003	0.000
i-Heptane	0.152	0.666	0.000	0.000	0.000	0.000	0.003	0.000
n-Heptane	0.039	0.170	0.000	0.000	0.000	0.000	0.001	0.000
Toluene	0.459	2.009	0.000	0.000	0.000	0.000	0.009	0.001
n-Octane	0.035	0.154	0.000	0.000	0.000	0.000	0.001	0.000
Ethylbenzene	0.058	0.252	0.000	0.000	0.000	0.000	0.001	0.000
meta-Xylene	0.280	1.226	0.000	0.000	0.000	0.000	0.006	0.001
n-Nonane	0.005	0.024	0.000	0.000	0.000	0.000	0.000	0.000
C10+	0.000	0.000	0.000	0.000	0.000	0.000	0.000	0.000
TEG	0.000	0.000	0.000	0.000	0.000	0.000	0.000	0.000
Water	5.827	25.521	0.000	0.000	0.000	0.000	5.827	0.766
Methanol	0.000	0.000	0.000	0.000	0.000	0.000	0.000	0.000

Component	Uncontrolled W&B Stream		Uncontrolled Flash Stream		Stream Controlled By Redundant VRU - Normal Operations		Stream Controlled By Flare - VRU Downtime	
	lb/hr	TPY	lb/hr	TPY	lb/hr	TPY	lb/hr	TPY
VOC TOTAL	7.83	34.28	0.00	0.00	0.00	0.00	0.16	0.02
HAP TOTAL	1.07	4.67	0.00	0.00	0.00	0.00	0.02	0.00

[1] Uncontrolled emissions estimated using Promax. Tank vapors are controlled using a redundant VRU system and FL2/FL3.

[2] Controlled Emissions = Uncontrolled Emissions * (1 - VRU Efficiency) * (1 - Flare Destruction Efficiency)

[3] Annual controlled rate calculated by multiplying hourly emission rate by 8760 hours minus VRU downtime hours.

VRU Collection Efficiency	100%
VRU Downtime	3%
VRU Downtime (Hours)	263
Flare Destruction Efficiency	98%

CONOCOPHILLIPS COMPANY

ZIA HILLS CENTRAL FACILITY

WATER TANK VAPORS (WT1-WT8) TO FLARE - COMBUSTION EMISSIONS

Total Gas Production - SCF/Day (Includes W&B from water tanks)	5418
Total Gas Production - SCF/Hr (Includes 25% Safety Factor)	282
Total Gas Production - SCF/Year	59,326
Duration -Hours/Year (VRU Downtime)	263
Heating Value - BTU/SCF (Promax)	1065.03

Component	Emission Rate (lb/hr)	Emission Rate (TPY)
CO[1]	0.08	0.01
NOx[1]	0.04	0.00
SO_2[2]	0.00	0.00
H2S[2]	0.00	0.00
$PM_{10 \& 2.5}$[3]	0.00	0.00

[1] The CO and NOx emission factors of 0.2755 and 0.138 lb/MMBtu are based on TCEQ document RG-360A/11 (February 2012)

[2] H2S/SO2 example calculation: SCF/day * 14.7 / 10.73 / 528 * H2S Wt% * Gas MW. SO2 is calculated assuming MW ratio of 64.07:34.08.

[3] PM 10 & 2.5 emissions are based on AP-42, Section 1.4.

CONOCOPHILLIPS COMPANY

ZIA HILLS CENTRAL FACILITY

TEG DEHYDRATOR: TOTAL EMISSIONS - PER DEHYDRATOR (DEHY1-DEHY2)

Component	Uncontrolled Still Column Emissions (Promax Stream 12)		Post-Condenser Still Column Emissions (Promax Stream VOC to Fuel Gas-2)		Post-Condenser Vapors Controlled By Glycol Reboiler		Flash Tank Emissions (Stream 509)		Flash Tank Emissions Controlled by Glycol Reboiler (Stream 509)		Total Combined Uncontrolled Dehydrator Emissions	
	lb/hr	TPY	lb/hr	TPY	lb/hr	TPY	lb/hr	TPY	lb/hr	TPY	lb/hr	TPY
H2S	0.0000	0.0000	0.0000	0.0000	0.0000	0.0000	0.0000	0.0000	0.0000	0.0000	0.0000	0.0000
Nitrogen	0.0007	0.0032	0.0007	0.0032	0.0007	0.0032	0.0514	0.2251	0.0514	0.2251	0.0521	0.2283
Methane	0.3402	1.4902	0.3399	1.4886	0.0068	0.0298	6.6423	29.0934	0.1328	0.5819	6.9825	30.5836
Carbon Dioxide	0.0797	0.3492	0.0792	0.3469	0.0792	0.3469	0.1458	0.6387	0.1458	0.6387	0.2255	0.9879
Ethane	0.8707	3.8137	0.8670	3.7974	0.0173	0.0759	4.6381	20.3149	0.0928	0.4063	5.5088	24.1286
Propane	1.5541	6.8069	1.5350	6.7232	0.0307	0.1345	4.1699	18.2640	0.0834	0.3653	5.7240	25.0710
i-Butane	0.4043	1.7709	0.3934	1.7232	0.0079	0.0345	0.7904	3.4619	0.0158	0.0692	1.1947	5.2328
n-Butane	1.6268	7.1254	1.5630	6.8461	0.0313	0.1369	2.0873	9.1426	0.0417	0.1829	3.7141	16.2680
i-Pentane	0.7303	3.1985	0.6679	2.9252	0.0134	0.0585	0.5668	2.4826	0.0113	0.0497	1.2971	5.6811
n-Pentane	1.0129	4.4365	0.9036	3.9577	0.0181	0.0792	0.6518	2.8549	0.0130	0.0571	1.6647	7.2913
i-Hexane	0.4502	1.9717	0.3560	1.5592	0.0071	0.0312	0.1735	0.7601	0.0035	0.0152	0.6237	2.7317
n-Hexane	0.4105	1.7980	0.3015	1.3207	0.0060	0.0264	0.1225	0.5366	0.0025	0.0107	0.5330	2.3346
2,2,4-Trimethylpentane	0.0003	0.0015	0.0002	0.0007	0.0000	0.0000	0.0001	0.0003	0.0000	0.0000	0.0004	0.0017
Cyclohexane	0.6486	2.8410	0.4227	1.8513	0.0085	0.0370	0.0665	0.2913	0.0013	0.0058	0.7151	3.1323
Benzene	0.6579	2.8816	0.4147	1.8164	0.0083	0.0363	0.0116	0.0506	0.0002	0.0010	0.6695	2.9323
i-Heptane	0.4945	2.1658	0.2941	1.2883	0.0059	0.0258	0.1146	0.5021	0.0023	0.0100	0.6091	2.6679
n-Heptane	0.2213	0.9692	0.1127	0.4937	0.0023	0.0099	0.0377	0.1653	0.0008	0.0033	0.2590	1.1345
Toluene	1.5845	6.9402	0.5931	2.5980	0.0119	0.0520	0.0143	0.0627	0.0003	0.0013	1.5988	7.0029
n-Octane	0.5010	2.1943	0.1265	0.5542	0.0025	0.0111	0.0484	0.2118	0.0010	0.0042	0.5493	2.4061
Ethylbenzene	0.1094	0.4790	0.0196	0.0859	0.0004	0.0017	0.0006	0.0026	0.0000	0.0001	0.1100	0.4816
meta-Xylene	1.4202	6.2206	0.2337	1.0237	0.0047	0.0205	0.0074	0.0324	0.0001	0.0006	1.4276	6.2530
n-Nonane	0.0768	0.3366	0.0087	0.0380	0.0002	0.0008	0.0040	0.0175	0.0001	0.0003	0.0808	0.3541
C10+	0.0000	0.0000	0.0000	0.0000	0.0000	0.0000	0.0000	0.0000	0.0000	0.0000	0.0000	0.0000
TEG	0.2486	1.0889	0.0000	0.0000	0.0000	0.0000	0.0001	0.0006	0.0000	0.0000	0.2487	1.0895
Water	54.4380	238.4385	0.3987	1.7463	0.3987	1.7463	0.0546	0.2391	0.0546	0.2391	54.4926	238.6776
Methanol	0.0000	0.0000	0.0000	0.0000	0.0000	0.0000	0.0000	0.0000	0.0000	0.0000	0.0000	0.0000

Component	Uncontrolled Still Column Emissions (Promax Stream 12)		Post-Condenser Still Column Emissions (Promax Stream VOC to Fuel Gas-2)		Post-Condenser Vapors Controlled By Glycol Reboiler		Flash Tank Emissions (Stream 509)		Flash Tank Emissions Controlled by Glycol Reboiler (Stream 509)		Total Combined Uncontrolled Dehydrator Emissions	
	lb/hr	TPY	lb/hr	TPY	lb/hr	TPY	lb/hr	TPY	lb/hr	TPY	lb/hr	TPY
VOC Total	**11.90**	**52.14**	**7.95**	**34.81**	**0.16**	**0.70**	**8.87**	**38.84**	**0.18**	**0.78**	**20.77**	**90.98**
HAP Total	**4.18**	**18.32**	**1.56**	**6.85**	**0.03**	**0.14**	**0.16**	**0.69**	**0.00**	**0.01**	**4.34**	**19.01**

UNCONTROLLED EMISSIONS SUMMARY	lb/hr	TPY
NMNEVOC (Includes TOTAL HAPs)	**20.77**	**90.98**
TOTAL HAPs	**4.34**	**19.01**

BURNER CONTROLLED EMISSIONS SUMMARY	lb/hr	TPY
NMNEVOC (Includes TOTAL HAPs)	**0.34**	**1.47**
TOTAL HAPs	**0.03**	**0.15**
BENZENE	**0.01**	**0.04**
N-HEXANE	**0.01**	**0.05**

* Dehydrator vapors are routed to the glycol reboiler, which controls VOC/HAP emissions by 98%.

CONOCOPHILLIPS COMPANY

ZIA HILLS CENTRAL FACILITY

TEG DEHYDRATOR: TOTAL EMISSIONS - PER DEHYDRATOR (DEHY3-DEHY4)

Component	Uncontrolled Still Column Emissions (Promax Stream 12)		Post-Condenser Still Column Emissions (Promax Stream VOC to Fuel Gas-1)		Post-Condenser Vapors Controlled By Glycol Reboiler		Flash Tank Emissions (Stream 403)		Flash Tank Emissions Controlled by Glycol Reboiler (Stream 403)		Total Combined Uncontrolled Dehydrator Emissions	
	lb/hr	TPY	lb/hr	TPY	lb/hr	TPY	lb/hr	TPY	lb/hr	TPY	lb/hr	TPY
H2S	0.0000	0.0000	0.0000	0.0000	0.0000	0.0000	0.0000	0.0000	0.0000	0.0000	0.0000	0.0000
Nitrogen	0.0013	0.0057	0.0013	0.0057	0.0013	0.0057	0.0911	0.3991	0.0911	0.3991	0.0924	0.4047
Methane	0.6018	2.6358	0.6011	2.6329	0.0120	0.0527	11.7319	51.3858	0.2346	1.0277	12.3337	54.0216
Carbon Dioxide	0.1409	0.6172	0.1399	0.6127	0.0028	0.0123	0.2577	1.1287	0.0052	0.0226	0.3986	1.7459
Ethane	1.5281	6.6932	1.5215	6.6643	0.0304	0.1333	8.1666	35.7696	0.1633	0.7154	9.6947	42.4628
Propane	2.7120	11.8787	2.6789	11.7334	0.0536	0.2347	7.3278	32.0956	0.1466	0.6419	10.0398	43.9744
i-Butane	0.7035	3.0814	0.6847	2.9991	0.0137	0.0600	1.3881	6.0799	0.0278	0.1216	2.0916	9.1613
n-Butane	2.8338	12.4118	2.7235	11.9290	0.0545	0.2386	3.6695	16.0724	0.0734	0.3214	6.5032	28.4842
i-Pentane	1.2678	5.5528	1.1603	5.0822	0.0232	0.1016	0.9965	4.3647	0.0199	0.0873	2.2643	9.9175
n-Pentane	1.7514	7.6712	1.5639	6.8498	0.0313	0.1370	1.1449	5.0149	0.0229	0.1003	2.8964	12.6861
i-Hexane	0.7792	3.4127	0.6173	2.7038	0.0123	0.0541	0.3052	1.3370	0.0061	0.0267	1.0844	4.7497
n-Hexane	0.7092	3.1061	0.5221	2.2870	0.0104	0.0457	0.2156	0.9445	0.0043	0.0189	0.9248	4.0506
2,2,4-Trimethylpentane	0.0006	0.0025	0.0003	0.0013	0.0000	0.0000	0.0001	0.0005	0.0000	0.0000	0.0007	0.0030
Cyclohexane	1.1271	4.9369	0.7363	3.2250	0.0147	0.0645	0.1175	0.5148	0.0024	0.0103	1.2447	5.4517
Benzene	1.1513	5.0428	0.7257	3.1787	0.0145	0.0636	0.0205	0.0898	0.0004	0.0018	1.1718	5.1326
i-Heptane	0.8542	3.7414	0.5100	2.2340	0.0102	0.0447	0.2021	0.8851	0.0040	0.0177	1.0563	4.6265
n-Heptane	0.3816	1.6714	0.1953	0.8553	0.0039	0.0171	0.0666	0.2915	0.0013	0.0058	0.4482	1.9630
Toluene	2.7707	12.1357	1.0401	4.5555	0.0208	0.0911	0.0254	0.1112	0.0005	0.0022	2.7961	12.2469
n-Octane	0.8609	3.7706	0.2189	0.9586	0.0044	0.0192	0.0854	0.3740	0.0017	0.0075	0.9463	4.1446
Ethylbenzene	0.1914	0.8383	0.0345	0.1510	0.0007	0.0030	0.0010	0.0046	0.0000	0.0001	0.1924	0.8429
meta-Xylene	2.4844	10.8816	0.4108	1.7993	0.0082	0.0360	0.0131	0.0576	0.0003	0.0012	2.4975	10.9391
n-Nonane	0.1319	0.5776	0.0150	0.0657	0.0003	0.0013	0.0071	0.0309	0.0001	0.0006	0.1389	0.6084
C10+	0.0001	0.0004	0.0000	0.0000	0.0000	0.0000	0.0000	0.0000	0.0000	0.0000	0.0001	0.0004
TEG	0.4555	1.9952	0.0000	0.0000	0.0000	0.0000	0.0002	0.0010	0.0000	0.0000	0.4557	1.9962
Water	108.7842	476.4746	0.6967	3.0518	0.6967	3.0518	0.1054	0.4616	0.1054	0.4616	108.8895	476.9362
Methanol	0.0000	0.0000	0.0000	0.0000	0.0000	0.0000	0.0000	0.0000	0.0000	0.0000	0.0000	0.0000

Component	Uncontrolled Still Column Emissions (Promax Stream 12)		Post-Condenser Still Column Emissions (Promax Stream VOC to Fuel Gas-1)		Post-Condenser Vapors Controlled By Glycol Reboiler		Flash Tank Emissions (Stream 403)		Flash Tank Emissions Controlled by Glycol Reboiler (Stream 403)		Total Combined Uncontrolled Dehydrator Emissions	
	lb/hr	TPY	lb/hr	TPY	lb/hr	TPY	lb/hr	TPY	lb/hr	TPY	lb/hr	TPY
VOC Total	20.71	90.71	13.84	60.61	0.28	1.21	15.59	68.27	0.31	1.37	36.30	158.98
HAP Total	7.31	32.01	2.73	11.97	0.05	0.24	0.28	1.21	0.01	0.02	7.58	33.22

UNCONTROLLED EMISSIONS	lb/hr	TPY
Total VOCs	**36.30**	**158.98**
Total HAPs	**7.58**	**33.22**

BURNER CONTROLLED EMISSIONS	lb/hr	TPY
NMNEVOC (Includes TOTAL HAPs)	**0.59**	**2.58**
TOTAL HAPs	**0.06**	**0.26**
BENZENE	**0.01**	**0.07**
N-HEXANE	**0.02**	**0.08**

* Dehydrator vapors are routed to the glycol reboiler, which controls VOC/HAP emissions by 98%.

CONOCOPHILLIPS COMPANY
ZIA HILLS CENTRAL FACILITY
FUGITIVE EMISSIONS

Component Type	Service	Estimated Components Count	Hours Operation	Emission Factors (lb/hr)	Total VOC Weight %	Total HAPs Weight %	Total CH4 Weight %	VOC Emissions		HAPs Emissions		CH4 Emissions	
								lb/hr	tpy	lb/hr	tpy	lb/hr	tpy
Valves	Gas/Vapor	490	8760	0.0099207	24.49%	0.51%	56.55%	1.19	5.21	0.02	0.11	2.75	12.04
	Light Oil	147	8760	0.0055115	98.05%	3.65%	0.81%	0.79	3.48	0.03	0.13	0.01	0.03
	Heavy Oil		8760	0.0000185	98.05%	3.65%	0.81%	0.00	0.00	0.00	0.00	0.00	0.00
	Water/Light Oil	118	8760	0.0002161	0.98%	0.04%	0.01%	0.00	0.00	0.00	0.00	0.00	0.00
Pump Seals	Gas/Vapor		8760	0.0052910	24.49%	0.51%	56.55%	0.00	0.00	0.00	0.00	0.00	0.00
	Light Oil	4	8760	0.0286598	98.05%	3.65%	0.81%	0.11	0.49	0.00	0.02	0.00	0.00
	Heavy Oil		8760	0.0286598	98.05%	3.65%	0.81%	0.00	0.00	0.00	0.00	0.00	0.00
	Water/Light Oil	4	8760	0.0000529	0.98%	0.04%	0.01%	0.00	0.00	0.00	0.00	0.00	0.00
Connectors	Gas/Vapor	1470	8760	0.0004409	24.49%	0.51%	56.55%	0.16	0.70	0.00	0.01	0.37	1.61
	Light Oil	441	8760	0.0004630	98.05%	3.65%	0.81%	0.20	0.88	0.01	0.03	0.00	0.01
	Heavy Oil		8760	0.0000165	98.05%	3.65%	0.81%	0.00	0.00	0.00	0.00	0.00	0.00
	Water/Light Oil	354	8760	0.0002425	0.98%	0.04%	0.01%	0.00	0.00	0.00	0.00	0.00	0.00
Open-ended Lines	Gas/Vapor	49	8760	0.0044092	24.49%	0.51%	56.55%	0.05	0.23	0.00	0.00	0.12	0.54
	Light Oil		8760	0.0030864	98.05%	3.65%	0.81%	0.00	0.00	0.00	0.00	0.00	0.00
	Heavy Oil		8760	0.0003086	98.05%	3.65%	0.81%	0.00	0.00	0.00	0.00	0.00	0.00
	Water/Light Oil		8760	0.0005512	0.98%	0.04%	0.01%	0.00	0.00	0.00	0.00	0.00	0.00
Flanges	Gas/Vapor	490	8760	0.0008598	24.49%	0.51%	56.55%	0.10	0.45	0.00	0.01	0.24	1.04
	Light Oil	147	8760	0.0002425	98.05%	3.65%	0.81%	0.03	0.15	0.00	0.01	0.00	0.00
	Heavy Oil		8760	0.0000009	98.05%	3.65%	0.81%	0.00	0.00	0.00	0.00	0.00	0.00
	Water/Light Oil	118	8760	0.0000064	0.98%	0.04%	0.01%	0.00	0.00	0.00	0.00	0.00	0.00
Other:	Gas/Vapor	49	8760	0.0194005	24.49%	0.51%	56.55%	0.23	1.02	0.00	0.02	0.54	2.35
	Light Oil	15	8760	0.0165345	98.05%	3.65%	0.81%	0.24	1.07	0.01	0.04	0.00	0.01
	Heavy Oil		8760	0.0000071	98.05%	3.65%	0.81%	0.00	0.00	0.00	0.00	0.00	0.00
	Water/Light Oil	12	8760	0.0308644	0.98%	0.04%	0.01%	0.00	0.02	0.00	0.00	0.00	0.00

	GAS		LIQUID	
Pollutant	lb/hr	tpy	lb/hr	tpy
VOC	1.74	7.61	1.39	6.09
HAPs	0.04	0.16	0.05	0.23
CH4	4.01	17.58	0.01	0.05

EMISSIONS SUMMARY		
Pollutant	lb/hr	tpy
VOC	3.13	13.70
HAPs	0.09	0.39
CH4	4.02	17.63

CONOCOPHILLIPS COMPANY

ZIA HILLS CENTRAL FACILITY

SSM EMISSIONS SUMMARY

Unit Identification	SSM Activity Description	NOx		CO		Total VOC (Includes Total HAPs)		SO_2		$PM_{10 \& 2.5}$		Total HAPs	
		lb/hr	TPY	lb/hr	TPY	lb/hr	TPY	lb/hr	TPY	lb/hr	TPY	lb/hr	TPY
SSM	Equipment Blowdowns	--	--	--	--	96.25	5.78	--	--	--	--	1.94	0.09
SSM	Tank Cleanouts	--	--	--	--	282.01	2.80	--	--	--	--	38.43	0.38
SSM	12 Hours of Flares Maintenance	--	--	--	--	9.81	0.06	--	--	--	--	0.47	0.00
SSM	Facility Shutdown (10 days) (uncontrolled tanks)	--	--	--	--	9.81	1.18	--	--	--	--	0.47	0.06
Total Emissions	**Total Emissions**	**0.00**	**0.00**	**0.00**	**0.00**	**397.87**	**9.81**	**0.00**	**0.00**	**0.00**	**0.00**	**41.30**	**0.53**

CONOCOPHILLIPS COMPANY
ZIA HILLS CENTRAL FACILITY
SSM - EQUIPMENT BLOWDOWN EMISSIONS

Description	Facility Identification Number SSM
Number of Blowdowns per Year	120
Number of Blowdowns per Hour	1
Blowdown Volume per Event, scf	1,500
Gas Stream Molecular Weight	21.6945
Gas Stream Density, lb/scf (Promax)	0.2588
Max VOC Percentage in Gas Stream, wt% (Promax)	24.8%
Max HAP Percentage in Gas Stream, wt% (Promax)	0.40%
Max H_2S Percentage in Gas Stream, wt% (Promax)	0.000%
VOC Hourly Emission Rates (lb/hr): [a]	96.25
VOC Annual Emission Rates (T/yr): [b]	5.78
HAP Hourly Emission Rates (lb/hr): [a]	1.94
HAP Annual Emission Rates (T/yr): [b]	0.093
H_2S Hourly Emission Rates (lb/hr): [a]	0.00000
H_2S Annual Emission Rates (T/yr): [b]	0.000000

[a] Hourly blowdown VOC, H_2S, and benzene emission rates are caclulated as follows:

VOC lb/hr = (1 blowdown/hr) * (1,500 scf/blowdown) * (0.2588 lb/scf) * (24.80% VOC in Stream) = 96.25 lb/hr

[b] Annual blowdown VOC, H_2S, and benzene emission rates are calculated as follows:

VOC T/yr = (120 blowdowns/yr) * (1,500 scf/blowdown) * (0.2588 lb/scf) * (24.80% VOC in Stream) / (2,000 lb/T) = 5.78 T/yr

[c] Hourly controlled blowdown VOC, H_2S, and benzene emissions are calculated based upon a conservative estimate of the portion of each consituent in the volume known to blowdown from the compressor. An example calculation for VOC for COMP-BD follows:

VOC lb/hr = (1 blowdown/hr) * (1,500 scf/blowdown) * (0.2588 lb/scf) * (24.80% VOC in Stream) * (100% - 98% Controlled at Flare) = 1.93 lb/hr

[d] Annual controlled blowdown VOC, H_2S, and benzene emission rates are calculated as follows:

VOC lb/hr = (120 blowdowns/yr) * (1,500 scf/blowdown) * (0.2588 lb/scf) * (24.80% VOC in Stream) / (2,000 lb/T) * (100% - 98% Controlled at Flare) = 0.12 T/yr

CONOCOPHILLIPS COMPANY

ZIA HILLS CENTRAL FACILITY

TANK CLEANOUTS

Emissions Summary for SSM: Tank Cleanouts

Pollutant	Hourly Max (lb/hr)	Annual Total (T/yr)
VOC	352.51	2.80

Activity	Description / Comments	Default Parameters		Equation Used		Input Parameters		Pollutant	Hourly Emissions (lb/hr)	Annual Emissions (T/yr)
Produced Water Tank Cleaning Activities	**For WT1-WT8** -For non-condensate tanks and storage vessels -Assumed volume drained was equal to 1% of the vessel volume -Assumed drained material is immediately placed in a closed vessel. To be conservative, this time is represented as 15 minutes -Assumed an average daily temperature of 72F, per TCEQ guidance. -Assume all emissions from opening, loading, and evaporation occur in three separate hours.	P, vapor pressure of material (psia)	0.12	Vv, volume of vessel (ft3)	5,614.97	Number of Non-Condensate Tanks	8	VOC	1.50	0.03
		Vessel Height (ft)	15.5					HAP	0.20	0.00
		Vessel Diameter (ft)	21.5							
		Vessel Volume (bbl)	1000							
		Average Daily Temperature (F)	72	Lo, opening loss (lb/activity)	6.00					
		Ideal gas constant (psia-ft3/lb-mol-°R)	10.73							
		MWv, vapor molecular weight (lb/lb-	52.12	Loading loss factor (lb/1000	0.09					
		Saturation Factor	0.60	Vl, volume of liquid drained	420.00					
		U wind speed (mph)	3.52	Loading loss per activity	0.04					
		Surface Area Ap (m2)	1	Vapor Pressure P_V (Pa)	807.01					
		t, time material sits uncovered (hr)	0.25	Evaporation Loss (lb/activity)	0.32					
		Produced Water stream H_2S content (%)	0.00							
		Type of Control Equipment	None							
		Control Efficiency (%) (for opening	0.00%							
		Events per Hour per tank	0.25	Total (lb/yr/tank)	6.35					
		Events per Year per tank	1							
Oil Tank Cleaning Activities	**For OT1-OT5, ST1-ST2** -For condensate tanks and storage vessels -Assumed volume drained was equal to 1% of the vessel volume -Assumed drained material is immediately placed in a closed vessel. To be conservative, this time is represented as 15 minutes -Assumed an average daily temperature of 72F, per TCEQ guidance. -Assume all emissions from opening, loading, and evaporation occur in three separate hours.	P, vapor pressure of material (psia)	11.70	Vv, volume of vessel (ft3)	5,614.97	Number of Condensate Tanks	7	VOC	150.01	2.22
		Vessel Height (ft)	30.0					HAP	20.44	0.30
		Vessel Diameter (ft)	16							
		Vessel Volume (bbl)	1,000							
		Average Daily Temperature (F)	72	Lo, opening loss (lb/activity)	600.04					
		Ideal gas constant (psia-ft3/lb-mol-°R)	10.73							
		MWv, vapor molecular weight (lb/lb-	52.12	Loading loss factor (lb/1000	8.57					
		Saturation Factor	0.60	Vl, volume of liquid drained	420.00					
		U wind speed (mph)	3.52	Loading loss per activity	3.60					
		Surface Area Ap (m2)	1	Vapor Pressure P_V (Pa)	80,700.82					
		t, time material sits uncovered (hr)	0.25	Evaporation Loss (lb/activity)	31.51					
		Condensate stream H_2S content (%)	0.00%							
		Type of Control Equipment	None							
		Control Efficiency (%) (for opening	0.00%							
		Events per Hour per tank	0.25	Total (lb/yr/tank)	635.15					
		Events per Year per tank	1							
Gun Barrel Separator Cleaning Activities	**For GB1-GB2** -For non-condensate tanks and storage vessels -Assumed volume drained was equal to 1% of the vessel volume -Assumed drained material is immediately placed in a closed vessel. To be conservative, this time is represented as 15 minutes -Assumed an average daily temperature of 72F, per TCEQ guidance. -Assume all emissions from opening, loading, and evaporation occur in three separate hours.	P, vapor pressure of material (psia)	10.47	Vv, volume of vessel (ft3)	5,614.97	Number of Non-Condensate Tanks	2	VOC	130.50	0.55
		Vessel Height (ft)	30					HAP	17.78	0.08
		Vessel Diameter (ft)	15.5							
		Vessel Volume (bbl)	1000							
		Average Daily Temperature (F)	72	Lo, opening loss (lb/activity)	521.98					
		Ideal gas constant (psia-ft3/lb-mol-°R)	10.73							
		MWv, vapor molecular weight (lb/lb-	50.68	Loading loss factor (lb/1000	7.46					
		Saturation Factor	0.60	Vl, volume of liquid drained	420.00					
		U wind speed (mph)	3.52	Loading loss per activity	3.13					
		Surface Area Ap (m2)	1	Vapor Pressure P_V (Pa)	72,199.13					
		t, time material sits uncovered (hr)	0.25	Evaporation Loss (lb/activity)	27.67					
		Produced Water stream H_2S content (%)	0.00							
		Type of Control Equipment	None							
		Control Efficiency (%) (for opening	0.00%							
		Events per Hour per tank	0.25	Total (lb/yr/tank)	552.79					
		Events per Year per tank	1							

Section 7

Information Used to Determine Emissions

Section 7

Information Used To Determine Emissions

<u>Information Used to Determine Emissions</u> shall include the following:

- ☑ If manufacturer data are used, include specifications for emissions units <u>and</u> control equipment, including control efficiencies specifications and sufficient engineering data for verification of control equipment operation, including design drawings, test reports, and design parameters that affect normal operation.
- ☐ If test data are used, include a copy of the complete test report. If the test data are for an emissions unit other than the one being permitted, the emission units must be identical. Test data may not be used if any difference in operating conditions of the unit being permitted and the unit represented in the test report significantly effect emission rates.
- ☑ If the most current copy of AP-42 is used, reference the section and date located at the bottom of the page. Include a copy of the page containing the emissions factors, and clearly mark the factors used in the calculations.
- ☐ If an older version of AP-42 is used, include a complete copy of the section.
- ☐ If an EPA document or other material is referenced, include a complete copy.
- ☐ Fuel specifications sheet.
- ☑ If computer models are used to estimate emissions, include an input summary (if available) and a detailed report, and a disk containing the input file(s) used to run the model. For tank-flashing emissions, include a discussion of the method used to estimate tank-flashing emissions, relative thresholds (i.e., permit or major source (NSPS, PSD or Title V)), accuracy of the model, the input and output from simulation models and software, all calculations, documentation of any assumptions used, descriptions of sampling methods and conditions, copies of any lab sample analysis.

Supporting documentation is provided.

Certificate of Analysis

Number: 6030-20030119-006A

Artesia Laboratory
200 E Main St.
Artesia, NM 88210
Phone 575-746-3481

Chris Chapman
Conoco Phillips
15 W London Rd.
Loving, NM 88256

Mar. 24, 2020

Field:		Sampled By:	M. Charley
Station Name:	ZHCF (Fuel Gas Main)	Sample Of:	Gas Spot
Station Number:	11907001	Sample Date:	03/11/2020 09:47
Station Location:	Conoco	Sample Conditions:	141 psia, @ 79 °F Ambient: 50 °F
Sample Point:	Fuel Gas	Effective Date:	03/11/2020 09:47
Meter Number:	CC#A054207SM	Method:	GPA-2261M
Formation:	Spot	Cylinder No:	5030-02011
County:	Lea	Instrument:	6030_GC2 (Agilent 7890B)
Analyzed:	03/24/2020 09:08:17 by User1	Last Inst. Cal.:	03/02/2020 9:09 AM

Analytical Data

Components	Un-normalized Mol %	Mol. %	Wt. %	GPM at 14.65 psia
Hydrogen Sulfide	0.000	0.00001	0.000	
Nitrogen	1.253	1.25037	1.596	
Methane	75.349	75.19110	54.975	
Carbon Dioxide	0.914	0.91208	1.829	
Ethane	12.382	12.35605	16.933	3.298
Propane	6.221	6.20796	12.476	1.707
Iso-butane	0.838	0.83624	2.215	0.273
n-Butane	1.887	1.88305	4.988	0.593
Iso-pentane	0.403	0.40216	1.322	0.147
n-Pentane	0.434	0.43309	1.424	0.157
Hexanes Plus	0.529	0.52789	2.242	0.230
	100.210	100.00000	100.000	6.405

GPM TOTAL C2+	6.405
GPM TOTAL C3+	3.107
GPM TOTAL iC5+	0.534

* VOC Wt% = 24.667

Calculated Physical Properties	Total	C6+
Relative Density Real Gas	0.7603	3.2176
Calculated Molecular Weight	21.94	93.19
Compressibility Factor	0.9961	
GPA 2172 Calculation:		
Calculated Gross BTU per ft³ @ 14.65 psia & 60°F		
Real Gas Dry BTU	1284	5113
Water Sat. Gas Base BTU	1262	5024
Ideal, Gross HV - Dry at 14.65 psia	1279.4	5113.2
Ideal, Gross HV - Wet	1257.0	5023.7

Comments: H2S Field Content 0.1 ppm
Mcf/day 1206

Hydrocarbon Laboratory Manager

Quality Assurance: The above analyses are performed in accordance with ASTM, UOP, GPA guidelines for quality assurance, unless otherwise stated.

Powered By SURECHEM

Certificate of Analysis

Number: 6030-20030067-001A

Artesia Laboratory
200 E Main St.
Artesia, NM 88210
Phone 575-746-3481

Chris Chapman
Conoco Phillips
15 W London Rd.
Loving, NM 88256

Mar. 10, 2020

Field:
Station Name: Zia Hills 19 BTF 2A
Station Number: 11933090
Station Location: Conoco
Sample Point: Bulk Seperator
Meter Number: CC#A754382SM
Formation:
County: Lea

Sampled By: Chris Chapman
Sample Of: Gas Spot
Sample Date: 03/06/2020 03:43
Sample Conditions: 166 psig, @ 120 °F
Method: GPA 2286
Cylinder No: 5030-00454
Analyzed: 03/10/2020 15:51:48 by User1

Analytical Data

Components	Mol. %	Wt. %	GPM at 14.65 psia
Hydrogen Sulfide	NIL	NIL	
Nitrogen	1.169	1.512	
Methane	76.659	56.770	
Carbon Dioxide	0.089	0.181	
Ethane	12.220	16.962	3.262
Propane	5.696	11.594	1.566
Iso-Butane	0.834	2.238	0.272
n-Butane	1.835	4.923	0.577
Iso-Pentane	0.420	1.399	0.154
n-Pentane	0.476	1.585	0.172
i-Hexanes	0.119	0.464	0.048
n-Hexane	0.085	0.343	0.035
Benzene	0.005	0.017	0.001
Cyclohexane	0.039	0.149	0.013
i-Heptanes	0.089	0.384	0.037
n-Heptane	0.033	0.151	0.015
Toluene	0.009	0.040	0.003
i-Octanes	0.083	0.407	0.038
n-Octane	0.012	0.064	0.006
Ethylbenzene	0.001	0.003	NIL
Xylenes	0.015	0.073	0.006
i-Nonanes	0.032	0.170	0.016
n-Nonane	0.012	0.069	0.007
Decanes Plus	0.068	0.502	0.045
	100.000	100.000	6.273

Certificate of Analysis

Number: 6030-20030067-001A

Artesia Laboratory
200 E Main St.
Artesia, NM 88210
Phone 575-746-3481

Chris Chapman
Conoco Phillips
15 W London Rd.
Loving, NM 88256

Mar. 10, 2020

Field:	
Station Name:	Zia Hills 19 BTF 2A
Station Number:	11933090
Station Location:	Conoco
Sample Point:	Bulk Seperator
Meter Number:	CC#A754382SM
Formation:	
County:	Lea

Sampled By:	Chris Chapman
Sample Of:	Gas Spot
Sample Date:	03/06/2020 03:43
Sample Conditions:	166 psig, @ 120 °F
Method:	GPA 2286
Cylinder No:	5030-00454
Analyzed:	03/10/2020 15:51:48 by User1

Calculated Physical Properties	**Total**	**C10+**
Calculated Molecular Weight	21.66	158.45
GPA 2172 Calculation:		
Calculated Gross BTU per ft³ @ 14.65 psia & 60°F		
Real Gas Dry BTU	1290.8	8522.0
Water Sat. Gas Base BTU	1268.2	8341.1
Relative Density Real Gas	0.7506	5.4710
Compressibility Factor	0.9962	
Ideal, Gross HV - Wet	1263.4	NIL
Ideal, Gross HV - Dry at 14.65 psia	1285.9	NIL
Net BTU Dry Gas - real gas	1172	
Net BTU Wet Gas - real gas	1151	

Comments: H2S Field Content 0 ppm
WO #23055147

Hydrocarbon Laboratory Manager

Quality Assurance: The above analyses are performed in accordance with ASTM, UOP, GPA guidelines for quality assurance, unless otherwise stated.

Certificate of Analysis

Number: 5030-20030490-001A

Midland Laboratory
2200 East I-20
Midland, TX 79706
Phone 432-689-7252

Andy Hartman
SPL-Artesia
200 E Main St
Artesia, NM 88210

Mar. 19, 2020

Station Name: ZIA HILLS 19 BTF 2A
Method: GPA 2103M
Cylinder No: 5030-35098
Analyzed: 03/18/2020 07:52:12 by User1

Sampled By: CHRIS CHAPMAN
Sample Of: Oil Spot
Sample Date: 03/10/2020 13:00
Sample Conditions: 311 psig, @ 136 °F

Analytical Data

Components	Mol. %	Wt. %	L.V. %
Hydrogen Sulfide	NIL	NIL	NIL
Nitrogen	0.030	0.006	0.006
Methane	6.808	0.781	1.950
Carbon Dioxide	0.048	0.015	0.014
Ethane	5.009	1.077	2.265
Propane	6.552	2.066	3.052
Iso-Butane	1.870	0.777	1.034
n-Butane	5.717	2.376	3.047
Iso-Pentane	2.774	1.431	1.715
n-Pentane	3.966	2.046	2.430
i-Hexanes	2.953	1.806	2.034
n-Hexane	2.962	1.825	2.059
2,2,4-Trimethylpentane	0.050	0.041	0.044
Benzene	0.184	0.103	0.087
Heptanes	9.225	6.610	7.196
Toluene	0.870	0.573	0.492
Octanes	10.890	8.895	9.432
Ethylbenzene	0.216	0.164	0.141
Xylenes	1.054	0.800	0.684
Nonanes	7.278	6.675	6.924
C10	5.304	6.454	6.076
C11	3.646	4.873	4.526
C12	3.087	4.497	4.127
C13	2.715	4.281	3.892
C14	2.285	3.876	3.492
C15	2.020	3.669	3.285
C16	1.613	3.123	2.806
C17	1.405	2.888	2.584
C18	1.310	2.851	2.538
C19	0.992	2.277	2.004
C20	0.884	2.136	1.873
C21	0.805	2.042	1.783
C22	0.655	1.740	1.515
C23	0.566	1.571	1.395
C24	0.526	1.524	1.319
C25	0.427	1.289	1.112
C26	0.417	1.308	1.162
C27	0.370	1.204	1.069
C28	0.304	1.025	0.879
C29	0.275	0.960	0.821
C30 Plus	1.938	8.345	7.136
	100.000	100.000	100.000

Powered By SURECHEM

Page 2 of 6

Certificate of Analysis

Number: 5030-20030490-001A

Midland Laboratory
2200 East I-20
Midland, TX 79706
Phone 432-689-7252

Andy Hartman
SPL-Artesia
200 E Main St
Artesia, NM 88210

Mar. 19, 2020

Station Name:	ZIA HILLS 19 BTF 2A	Sampled By:	CHRIS CHAPMAN
Method:	GPA 2103M	Sample Of:	Oil Spot
Cylinder No:	5030-35098	Sample Date:	03/10/2020 13:00
Analyzed:	03/18/2020 07:52:12 by User1	Sample Conditions:	311 psig, @ 136 °F

Calculated Physical Properties	**Total**	**C30+**
Specific Gravity at 60°F	0.7492	0.8912
API Gravity at 60°F	57.368	27.279
Molecular Weight	139.849	503.498
Pounds per Gallon (in Vacuum)	6.246	7.430
Pounds per Gallon (in Air)	6.239	7.422
Cu. Ft. Vapor per Gallon @ 14.696 psia	16.950	5.600

Comments: Field/System: Delaware Basin
Sample Point: Oil dump upstream of meter (low point bleed upstream of Coriolis)

Hydrocarbon Laboratory Manager

Quality Assurance: The above analyses are performed in accordance with ASTM, UOP, GPA guidelines for quality assurance, unless otherwise stated.

Powered By SURECHEM

Page 3 of 6

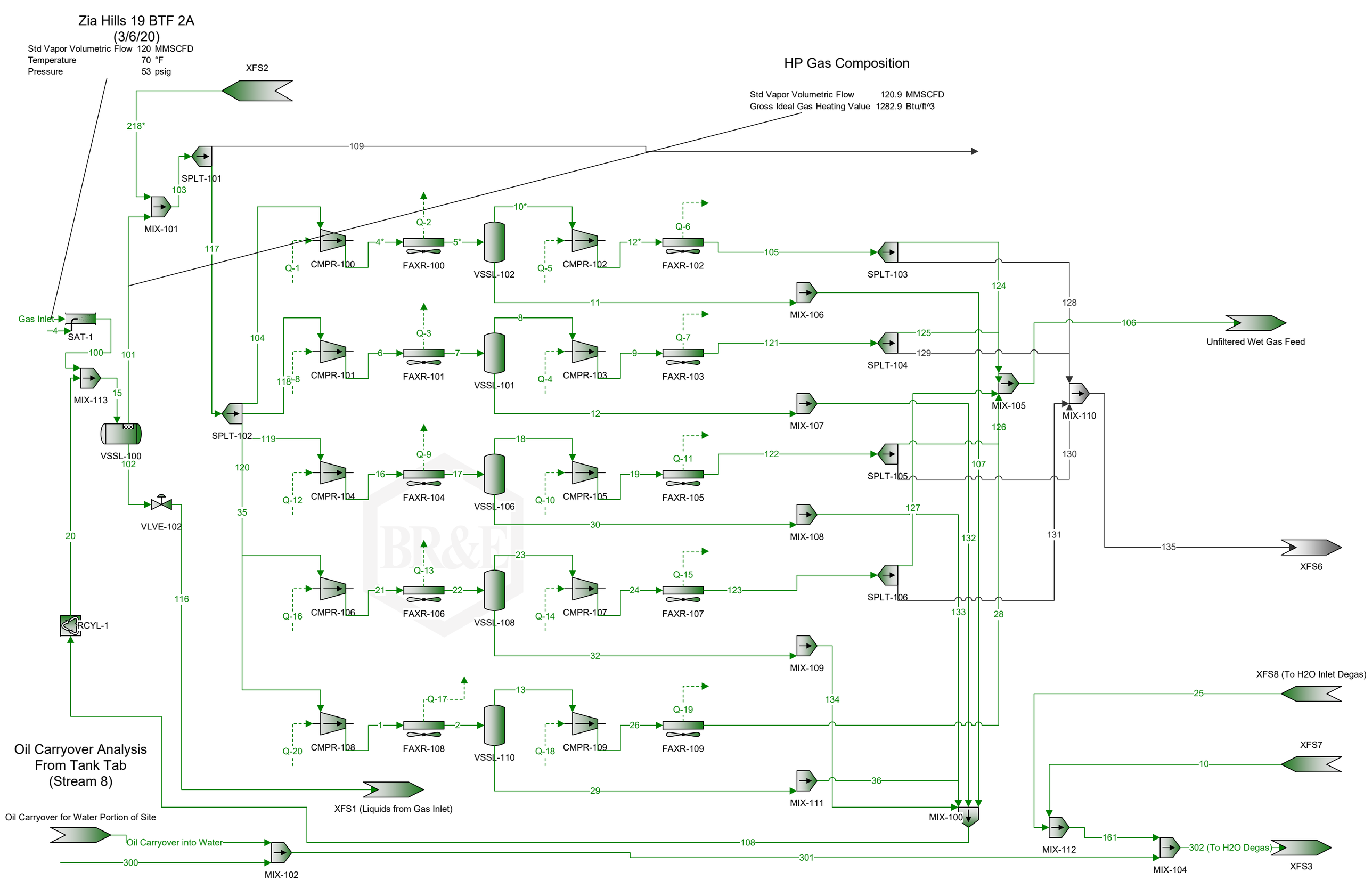
Zia Hills 19 BTF 2A
(3/6/20)
Std Vapor Volumetric Flow 120 MMSCFD
Temperature 70 °F
Pressure 53 psig
HP Gas Composition
Std Vapor Volumetric Flow 120.9 MMSCFD
Gross Ideal Gas Heating Value 1282.9 Btu/ft^3
XFS2
218*
109
SPLT-101
103
MIX-101
117
Q-1
CMPR-100
4*
Q-2
FAXR-100
5*
VSSL-102
10*
Q-5
CMPR-102
12*
Q-6
FAXR-102
105
SPLT-103
124
128
11
MIX-106
106
Unfiltered Wet Gas Feed
Gas Inlet
4
SAT-1
100
101
104
Q-3
CMPR-101
6
FAXR-101
7
VSSL-101
8
Q-4
CMPR-103
9
Q-7
FAXR-103
121
SPLT-104
125
129
118
8
MIX-113
15
12
MIX-107
MIX-105
MIX-110
126
VSSL-100
102
SPLT-102
119
120
Q-9
CMPR-104
16
FAXR-104
17
VSSL-106
18
Q-10
CMPR-105
19
Q-11
FAXR-105
122
SPLT-105
107
130
Q-12
35
VLVE-102
30
MIX-108
127
132
131
135
XFS6
20
116
Q-13
CMPR-106
21
FAXR-106
22
VSSL-108
23
Q-14
CMPR-107
24
Q-15
FAXR-107
123
SPLT-106
133
28
Q-16
RCYL-1
32
MIX-109
134
XFS8 (To H2O Inlet Degas)
25
Q-17
CMPR-108
1
FAXR-108
2
VSSL-110
13
Q-18
CMPR-109
26
Q-19
FAXR-109
Q-20
Oil Carryover Analysis
From Tank Tab
(Stream 8)
XFS7
10
29
MIX-111
36
XFS1 (Liquids from Gas Inlet)
MIX-100
Oil Carryover for Water Portion of Site
Oil Carryover into Water
108
MIX-112
161
302 (To H2O Degas)
300
301
MIX-102
MIX-104
XFS3

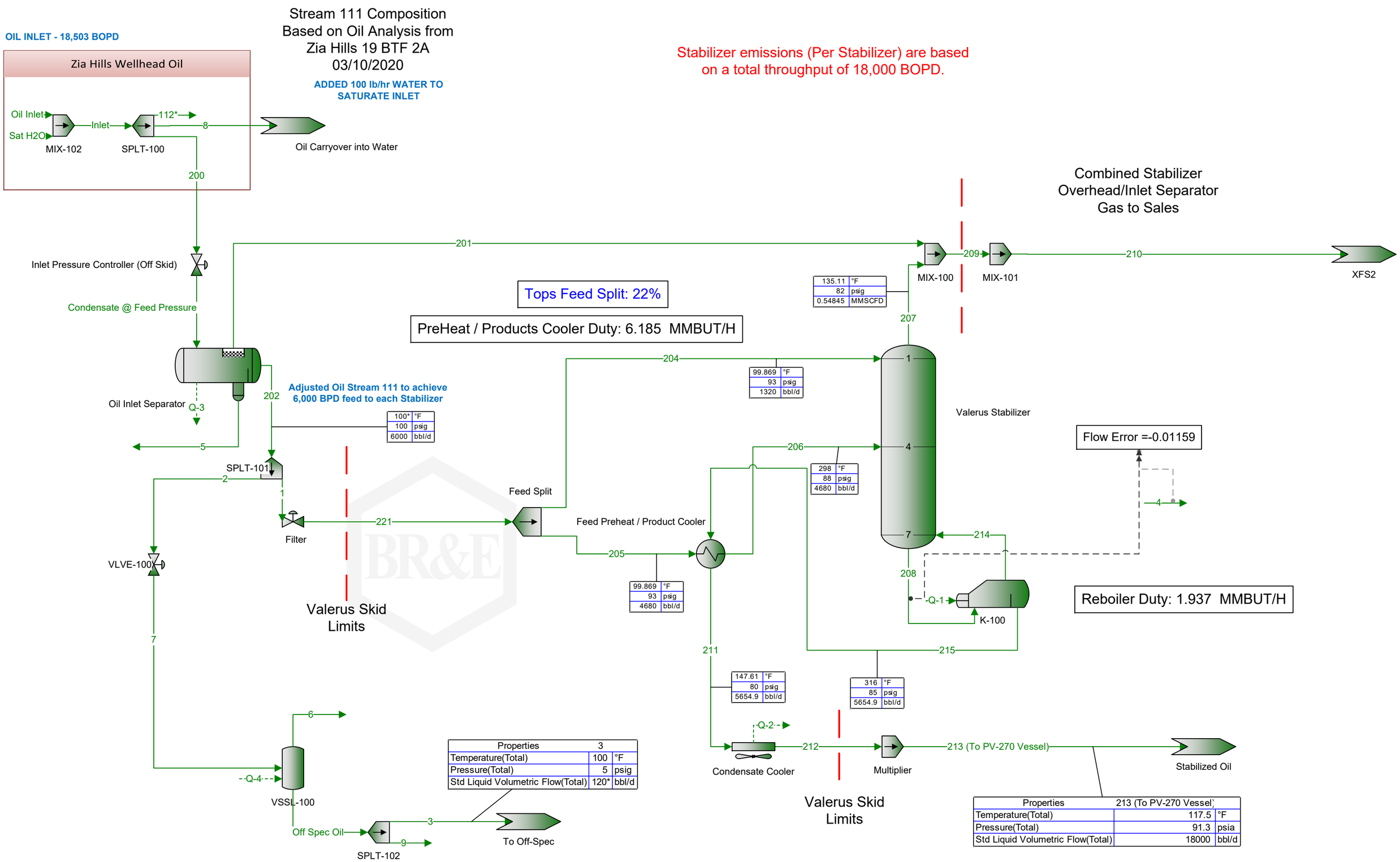
OIL INLET - 18,503 BOPD
Zia Hills Wellhead Oil
Oil Inlet
Sat H2O
MIX-102
Inlet
SPLT-100
112*
8
200
Stream 111 Composition
Based on Oil Analysis from
Zia Hills 19 BTF 2A
03/10/2020
ADDED 100 lb/hr WATER TO
SATURATE INLET
Oil Carryover into Water
Stabilizer emissions (Per Stabilizer) are based
on a total throughput of 18,000 BOPD.
Combined Stabilizer
Overhead/Inlet Separator
Gas to Sales
201
209
210
MIX-100
MIX-101
XFS2
Inlet Pressure Controller (Off Skid)
Condensate @ Feed Pressure
Tops Feed Split: 22%
PreHeat / Products Cooler Duty: 6.185 MMBUT/H
135.11 °F
82 psig
0.54845 MMSCFD
207
204
99.869 °F
93 psig
1320 bbl/d
Oil Inlet Separator
Q-3
202
Adjusted Oil Stream 111 to achieve
6,000 BPD feed to each Stabilizer
100* °F
100 psig
6000 bbl/d
Valerus Stabilizer
Flow Error =-0.01159
5
SPLT-101
2
1
206
298 °F
88 psig
4680 bbl/d
4
Feed Split
Filter
221
Feed Preheat / Product Cooler
205
214
VLVE-100
99.869 °F
93 psig
4680 bbl/d
208
Q-1
K-100
Reboiler Duty: 1.937 MMBUT/H
Valerus Skid
Limits
7
211
215
147.61 °F
80 psig
5654.9 bbl/d
316 °F
85 psig
5654.9 bbl/d
6
Q-2
Q-4
VSSL-100
Properties 3
Temperature(Total) 100 °F
Pressure(Total) 5 psig
Std Liquid Volumetric Flow(Total) 120* bbl/d
Condensate Cooler
212
Multiplier
213 (To PV-270 Vessel)
Stabilized Oil
Valerus Skid
Limits
Off Spec Oil
3
9
SPLT-102
To Off-Spec
Properties 213 (To PV-270 Vessel)
Temperature(Total) 117.5 °F
Pressure(Total) 91.3 psia
Std Liquid Volumetric Flow(Total) 18000 bbl/d

Tank Emissions
Based on a throughput of 18,000 BOPD

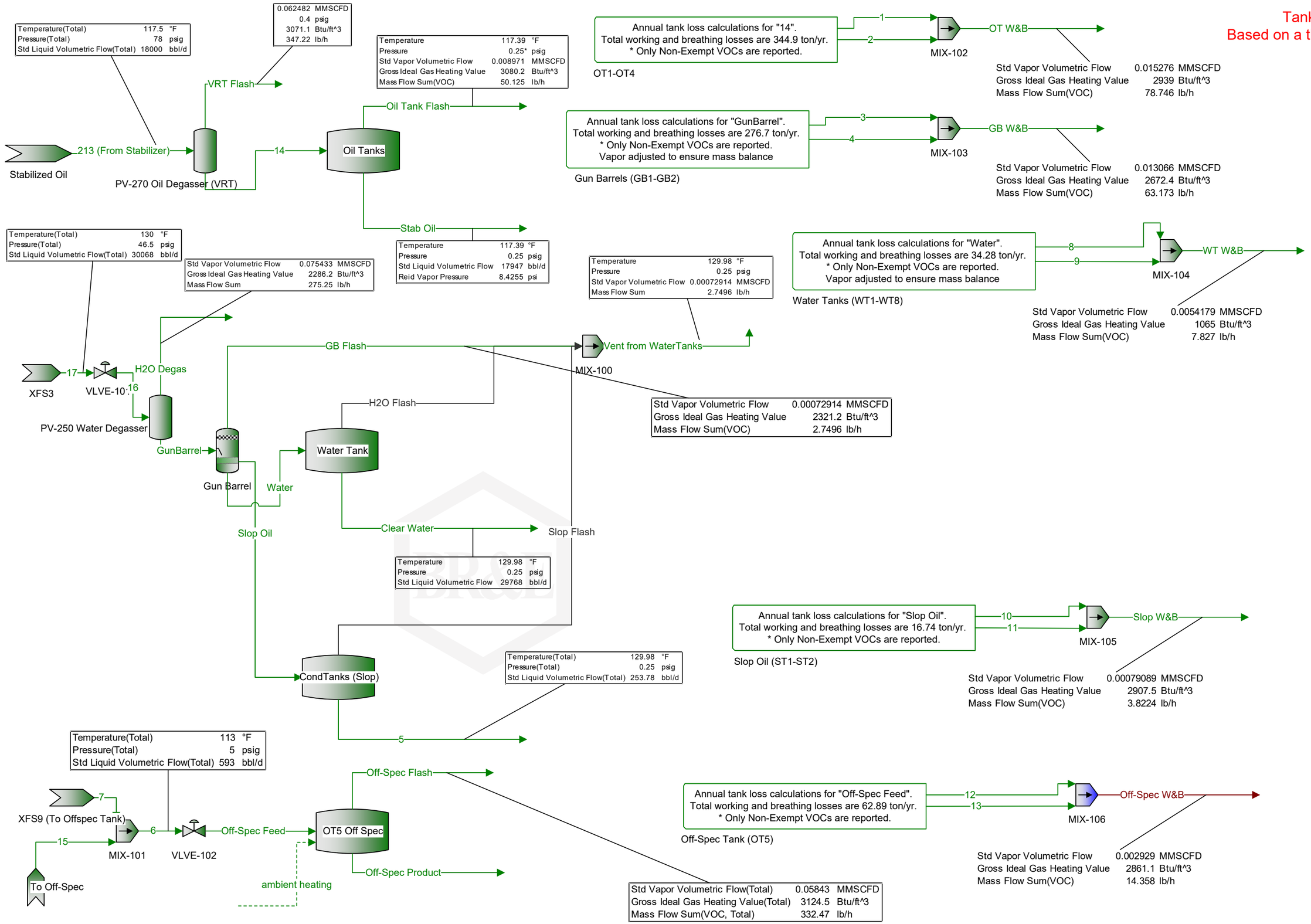

Zia Hills
DEHY1-DEHY2
0.5 MMBTU/Hr Regen

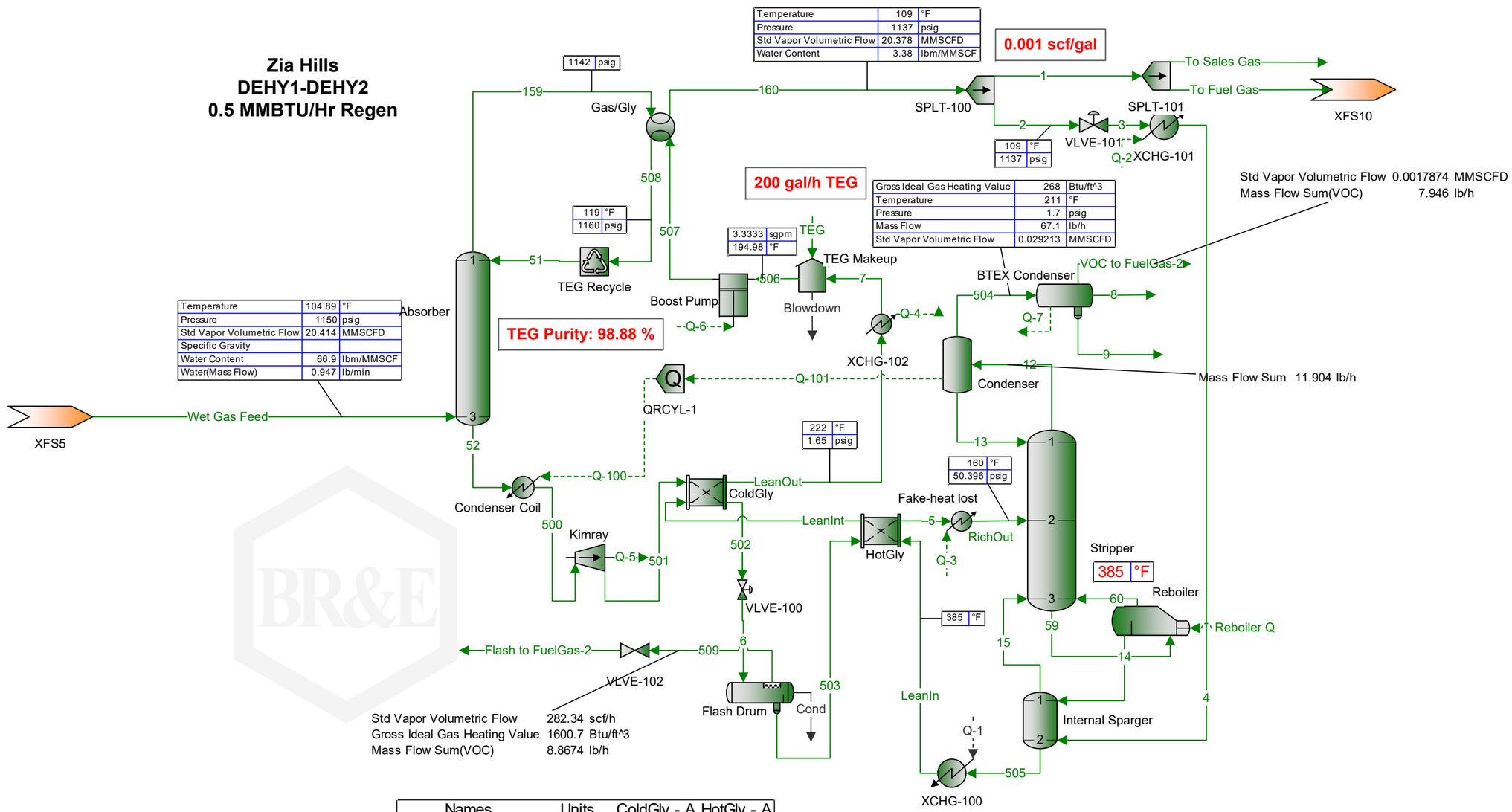

Names	Units	ColdGly - A	HotGly - A
Total Energy Supply	MMBTU/h	0.0136	0.193

Reboiler Duty: 0.3433 MMBtu/h

Zia Hills
DEHY3-DEHY4
0.75 MMBTU/Hr Regen

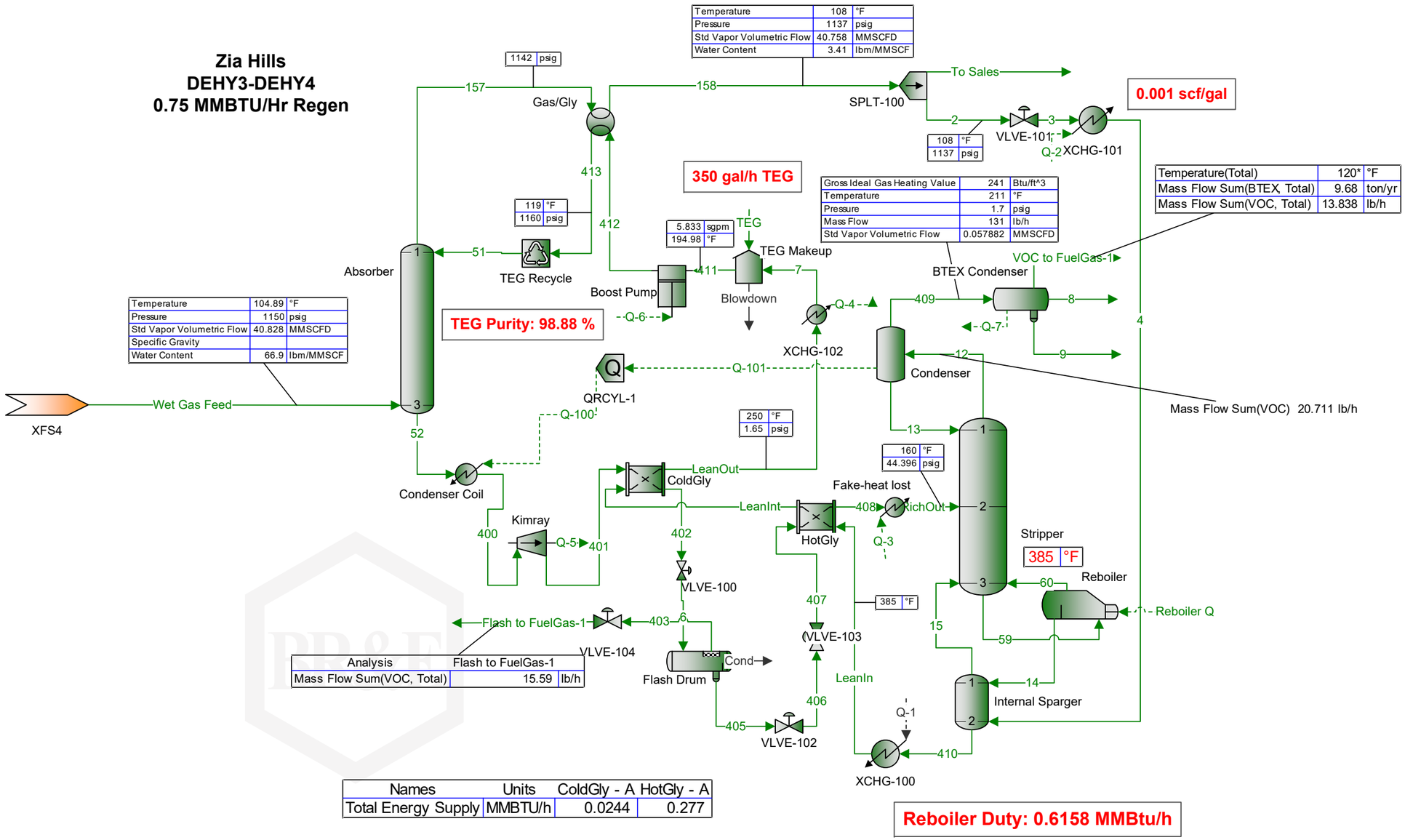

Names	Units	ColdGly - A	HotGly - A
Total Energy Supply	MMBTU/h	0.0244	0.277

Reboiler Duty: 0.6158 MMBtu/h

Gas
Plant Schematic

Client Name:	COP	Job: Zia Hills Permit Basis
Location:		
Flowsheet:	Gas	

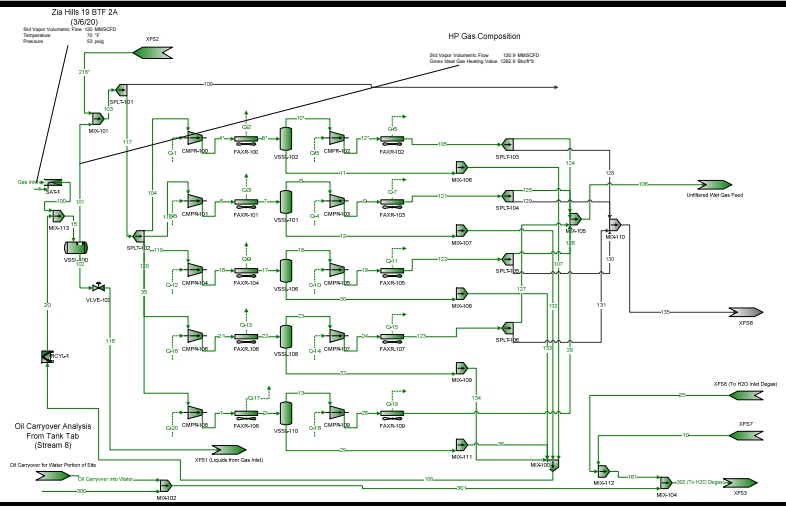

ProMax 5.0.20259.0
Copyright © 2002-2020 BRE Group, Ltd.
Licensed to Portnoy Environmental, Inc. and Affiliates

Process Streams Report
All Streams
Tabulated by Total Phase

Client Name:	COP	Job: Zia Hills Permit Basis
Location:		
Flowsheet:	Gas	

Connections

	Gas Inlet	Oil Carryover into Water	101	218*
From Block	--	Oil Carryover for Water Portion of Site	VSSL-100	XFS2
To Block	SAT-1	MIX-102	MIX-101	MIX-101

Stream Composition

Mole Fraction	Gas Inlet %	Oil Carryover into Water %	101 %	218* %
H2S	0 *	0	0	0
Nitrogen	1.169 *	0.0298893	1.1606	0.153889
Methane	76.659 *	6.78289	76.1429	34.9049
Carbon Dioxide	0.089 *	0.047823	0.0884886	0.244792
Ethane	12.22 *	4.99052	12.1685	24.2384
Propane	5.696 *	6.52783	5.70565	23.8282
i-Butane	0.834 *	1.8631	0.84357	3.84229
n-Butane	1.835 *	5.69591	1.86894	8.02812
i-Pentane	0.42 *	2.76377	0.437218	1.23868
n-Pentane	0.476 *	3.95137	0.500804	1.29479
i-Hexane	0.119 *	2.94211	0.131898	0.391083
n-Hexane	0.085 *	2.95107	0.0964683	0.286745
2,2,4-Trimethylpentane	0 *	0.0498156	1.67683E-05	0.0018947
Cyclohexane	0.039 *	0	0.0442664	0
Benzene	0.005 *	0.183321	0.00564755	0.0170893
i-Heptane	0.089 *	6.43368	0.105963	0.324792
n-Heptane	0.033 *	2.75729	0.0391656	0.102146
Toluene	0.009 *	0.866791	0.0106505	0.0268622
n-Octane	0.095 *	10.8498	0.0865156	0.150248
Ethylbenzene	0.001 *	0.215203	0.000865146	0.00257783
meta-Xylene	0.015 *	1.05011	0.0119624	0.0114369
n-Nonane	0.044 *	7.25116	0.0175104	0.0373379
C10+	0.068 *	31.4277	9.10574E-07	3.65315E-05
TEG	0 *	0	0	0
Water	0 *	0.368842	0.532437	0.873662
Methanol	0 *	0	0	0

Molar Flow	Gas Inlet lbmol/h	Oil Carryover into Water lbmol/h	101 lbmol/h	218* lbmol/h
H2S	0 *	0	0	0
Nitrogen	154.025 *	0.00729054	154.062	0.449812
Methane	10100.4 *	1.65447	10107.5	102.026
Carbon Dioxide	11.7264 *	0.0116649	11.7463	0.715521
Ethane	1610.08 *	1.21728	1615.29	70.8482
Propane	750.493 *	1.59225	757.387	69.6492
i-Butane	109.886 *	0.454444	111.978	11.2309
n-Butane	241.776 *	1.38933	248.089	23.4659
i-Pentane	55.3383 *	0.674132	58.0378	3.62062
n-Pentane	62.7167 *	0.96381	66.4784	3.78463
i-Hexane	15.6792 *	0.717633	17.5086	1.14312
n-Hexane	11.1994 *	0.71982	12.8055	0.838147
2,2,4-Trimethylpentane	0 *	0.0121509	0.00222588	0.00553814
Cyclohexane	5.13856 *	0	5.87608	0
Benzene	0.658789 *	0.0447153	0.749676	0.0499514
i-Heptane	11.7264 *	1.56929	14.066	0.949358
n-Heptane	4.34801 *	0.672553	5.19897	0.298569
Toluene	1.18582 *	0.211426	1.41379	0.0785173
n-Octane	12.517 *	2.64647	11.4844	0.43917
Ethylbenzene	0.131758 *	0.0524919	0.114842	0.00753493

Copyright © 2002-2020 BRE Group, Ltd.
Licensed to Portnoy Environmental, Inc. and Affiliates

Process Streams Report
All Streams
Tabulated by Total Phase

Client Name:	COP	Job: Zia Hills Permit Basis
Location:		
Flowsheet:	Gas	

Molar Flow	Gas Inlet lbmol/h	Oil Carryover into Water lbmol/h	101 lbmol/h	218* lbmol/h
meta-Xylene	1.97637 *	0.256141	1.58793	0.0334297
n-Nonane	5.79734 *	1.76869	2.32439	0.109138
C10+	8.95953 *	7.66576	0.000120873	0.00010678
TEG	0 *	0	0	0
Water	0 *	0.0899672	70.6775	2.55369
Methanol	0 *	0	0	0

Mass Fraction	Gas Inlet %	Oil Carryover into Water %	101 %	218* %
H2S	0 *	0	0	0
Nitrogen	1.50574 *	0.00624688	1.50297	0.127856
Methane	56.5462 *	0.811833	56.4681	16.6076
Carbon Dioxide	0.180097 *	0.0157023	0.180026	0.319516
Ethane	16.8951 *	1.11956	16.9145	21.6159
Propane	11.5487 *	2.14756	11.6306	31.1628
i-Butane	2.22883 *	0.807904	2.26655	6.6234
n-Butane	4.90397 *	2.46994	5.02157	13.839
i-Pentane	1.39331 *	1.48769	1.45824	2.65055
n-Pentane	1.57908 *	2.12695	1.67032	2.77062
i-Hexane	0.471519 *	1.89157	0.52544	0.999541
n-Hexane	0.3368 *	1.89734	0.3843	0.732871
2,2,4-Trimethylpentane	0 *	0.0424542	8.85453E-05	0.00641894
Cyclohexane	0.150917 *	0	0.172219	0
Benzene	0.0179579 *	0.106834	0.0203929	0.0395903
i-Heptane	0.410049 *	4.80968	0.490834	0.965229
n-Heptane	0.152041 *	2.06129	0.181419	0.303561
Toluene	0.0381288 *	0.595849	0.0453644	0.0734059
n-Octane	0.498962 *	9.24652	0.456848	0.509016
Ethylbenzene	0.00488147 *	0.170456	0.00424593	0.0081168
meta-Xylene	0.0732221 *	0.83176	0.0587088	0.0360113
n-Nonane	0.259476 *	6.93845	0.103818	0.142028
C10+	0.804951 *	60.3648	1.0837E-05	0.000278938
TEG	0 *	0	0	0
Water	0 *	0.049575	0.443417	0.466802
Methanol	0 *	0	0	0

Mass Flow	Gas Inlet lb/h	Oil Carryover into Water lb/h	101 lb/h	218* lb/h
H2S	0 *	0	0	0
Nitrogen	4314.76 *	0.204233	4315.81	12.6008
Methane	162036 *	26.5417	162149	1636.75
Carbon Dioxide	516.075 *	0.513365	516.948	31.4897
Ethane	48413.6 *	36.6024	48570.2	2130.34
Propane	33093.4 *	70.2115	33397.5	3071.22
i-Butane	6386.82 *	26.4133	6508.43	652.764
n-Butane	14052.5 *	80.7512	14419.5	1363.89
i-Pentane	3992.59 *	48.6378	4187.35	261.223
n-Pentane	4524.94 *	69.5377	4796.33	273.056
i-Hexane	1351.16 *	61.8422	1508.81	98.509
n-Hexane	965.114 *	62.0307	1103.52	72.2276
2,2,4-Trimethylpentane	0 *	1.38798	0.254259	0.632613
Cyclohexane	432.458 *	0	494.528	0
Benzene	51.4592 *	3.4928	58.5585	3.9018
i-Heptane	1175.01 *	157.246	1409.44	95.1275
n-Heptane	435.679 *	67.3911	520.947	29.9172
Toluene	109.26 *	19.4804	130.264	7.23446
n-Octane	1429.8 *	302.302	1311.84	50.1657
Ethylbenzene	13.9881 *	5.5728	12.1922	0.799946

* User Specified Values
? Extrapolated or Approximate Values

Copyright © 2002-2020 BRE Group, Ltd.
Licensed to Portnoy Environmental, Inc. and Affiliates

Process Streams Report
All Streams
Tabulated by Total Phase

Client Name:	COP	Job: Zia Hills Permit Basis
Location:		
Flowsheet:	Gas	

Mass Flow	Gas Inlet lb/h	Oil Carryover into Water lb/h	101 lb/h	218* lb/h
meta-Xylene	209.821 *	27.1932	168.583	3.54907
n-Nonane	743.539 *	226.843	298.114	13.9975
C10+	2306.62 *	1973.54	0.0311186	0.0274905
TEG	0 *	0	0	0
Water	0 *	1.62078	1273.27	46.0054
Methanol	0 *	0	0	0

Stream Properties

Property	Units	Gas Inlet	Oil Carryover into Water	101	218*
Temperature	°F	70 *	131.274	67.3211	123.843
Pressure	psig	53 *	100	50	82
Mole Fraction Vapor	%	99.8169	9.61004	100	100
Mole Fraction Light Liquid	%	0.183077	90.39	0	0
Mole Fraction Heavy Liquid	%	0	0	0	0
Molecular Weight	lb/lbmol	21.7486	134.035	21.632	33.7172
Mass Density	lb/ft^3	0.258788	16.6976	0.246487	0.539971
Molar Flow	lbmol/h	13175.8	24.3918	13274.3	292.297
Mass Flow	lb/h	286554	3269.36	287151	9855.43
Vapor Volumetric Flow	ft^3/h	1.1073E+06	195.798	1.16497E+06	18251.8
Liquid Volumetric Flow	gpm	138052	24.4112	145243	2275.54
Std Vapor Volumetric Flow	MMSCFD	120 *	0.222151	120.898	2.66213
Std Liquid Volumetric Flow	sgpm	1617.44	8.75	1620.89	44.9566
Compressibility		0.980238	0.143412	0.982289	0.950298
Specific Gravity				0.746898	1.16417
API Gravity					
Enthalpy	Btu/h	-4.53974E+08	-2.78357E+06	-4.61294E+08	-1.18957E+07
Mass Enthalpy	Btu/lb	-1584.25	-851.411	-1606.45	-1207.02
Mass Cp	Btu/(lb*°F)	0.480234	0.517517	0.477931	0.464138
Ideal Gas CpCv Ratio		1.24075	1.03727	1.24284	1.15071
Dynamic Viscosity	cP			0.010447	0.0101298
Kinematic Viscosity	cSt			2.64592	1.17114
Thermal Conductivity	Btu/(h*ft*°F)			0.0168885	0.0152588
Surface Tension	lbf/ft				
Net Ideal Gas Heating Value	Btu/ft^3	1175.35	6661.67	1164.54	1777.4
Net Liquid Heating Value	Btu/lb	20443.3	18713.2	20360	19870.2
Gross Ideal Gas Heating Value	Btu/ft^3	1294.36	7135.96	1282.93	1940
Gross Liquid Heating Value	Btu/lb	22520.3	20056	22437.4	21700.7

Remarks

Copyright © 2002-2020 BRE Group, Ltd.
Licensed to Portnoy Environmental, Inc. and Affiliates

OH/LH
Plant Schematic

Client Name:	COP	Job: Zia Hills Permit Basis
Location:		
Flowsheet:	OH/LH	

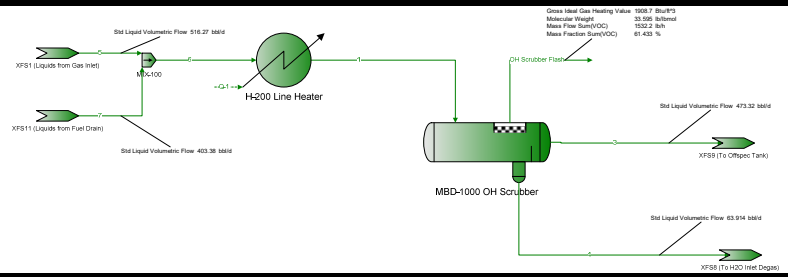

ProMax 5.0.20259.0
Copyright © 2002-2020 BRE Group, Ltd.
Licensed to Portnoy Environmental, Inc. and Affiliates

Process Streams Report
All Streams
Tabulated by Total Phase

Client Name:	COP	Job: Zia Hills Permit Basis
Location:		
Flowsheet:	OH/LH	

Connections

	OH Scrubber Flash				
From Block	MBD-1000 OH Scrubber				
To Block	--				

Stream Composition

Mole Fraction	OH Scrubber Flash %				
H2S	0				
Nitrogen	0.26155				
Methane	38.209				
Carbon Dioxide	0.0877829				
Ethane	20.3823				
Propane	19.6881				
i-Butane	3.71432				
n-Butane	8.32698				
i-Pentane	1.803				
n-Pentane	2.01023				
i-Hexane	0.494814				
n-Hexane	0.367775				
2,2,4-Trimethylpentane	8.21503E-05				
Cyclohexane	0.160028				
Benzene	0.0207181				
i-Heptane	0.41421				
n-Heptane	0.162025				
Toluene	0.0434258				
n-Octane	0.429034				
Ethylbenzene	0.00425814				
meta-Xylene	0.0595443				
n-Nonane	0.106875				
C10+	2.96273E-05				
TEG	2.47407E-09				
Water	3.25396				
Methanol	0				

Molar Flow	OH Scrubber Flash lbmol/h				
H2S	0				
Nitrogen	0.194184				
Methane	28.3677				
Carbon Dioxide	0.0651732				
Ethane	15.1325				
Propane	14.6171				
i-Butane	2.75765				
n-Butane	6.18225				
i-Pentane	1.33861				
n-Pentane	1.49247				
i-Hexane	0.367367				
n-Hexane	0.273049				
2,2,4-Trimethylpentane	6.09913E-05				
Cyclohexane	0.118811				
Benzene	0.0153819				
i-Heptane	0.307524				
n-Heptane	0.120293				
Toluene	0.0322409				
n-Octane	0.31853				
Ethylbenzene	0.0031614				
meta-Xylene	0.0442078				

Copyright © 2002-2020 BRE Group, Ltd.
Licensed to Portnoy Environmental, Inc. and Affiliates

Process Streams Report
All Streams
Tabulated by Total Phase

Client Name:	COP	Job: Zia Hills Permit Basis
Location:		
Flowsheet:	OH/LH	

Molar Flow	OH Scrubber Flash lbmol/h				
n-Nonane	0.0793477				
C10+	2.19964E-05				
TEG	1.83684E-09				
Water	2.41585				
Methanol	0				

Mass Fraction	OH Scrubber Flash %				
H2S	0				
Nitrogen	0.218097				
Methane	18.246				
Carbon Dioxide	0.114997				
Ethane	18.2433				
Propane	25.8421				
i-Butane	6.42616				
n-Butane	14.4065				
i-Pentane	3.87217				
n-Pentane	4.31722				
i-Hexane	1.26927				
n-Hexane	0.943397				
2,2,4-Trimethylpentane	0.000279327				
Cyclohexane	0.400894				
Benzene	0.0481723				
i-Heptane	1.23545				
n-Heptane	0.483269				
Toluene	0.119102				
n-Octane	1.4588				
Ethylbenzene	0.0134565				
meta-Xylene	0.188171				
n-Nonane	0.408019				
C10+	0.000227046				
TEG	1.10595E-08				
Water	1.74495				
Methanol	0				

Mass Flow	OH Scrubber Flash lb/h				
H2S	0				
Nitrogen	5.43975				
Methane	455.088				
Carbon Dioxide	2.86824				
Ethane	455.021				
Propane	644.551				
i-Butane	160.281				
n-Butane	359.326				
i-Pentane	96.5792				
n-Pentane	107.68				
i-Hexane	31.658				
n-Hexane	23.5301				
2,2,4-Trimethylpentane	0.00696694				
Cyclohexane	9.99904				
Benzene	1.20151				
i-Heptane	30.8145				
n-Heptane	12.0536				
Toluene	2.97063				
n-Octane	36.3852				
Ethylbenzene	0.33563				
meta-Xylene	4.69333				

Copyright © 2002-2020 BRE Group, Ltd.
Licensed to Portnoy Environmental, Inc. and Affiliates

Process Streams Report
All Streams
Tabulated by Total Phase

Client Name:	COP	Job: Zia Hills Permit Basis
Location:		
Flowsheet:	OH/LH	

Mass Flow	OH Scrubber Flash lb/h				
n-Nonane	10.1767				
C10+	0.00566295				
TEG	2.75844E-07				
Water	43.5223				
Methanol	0				

Stream Properties

Property	Units	OH Scrubber Flash				
Temperature	°F	124.829				
Pressure	psig	46.5				
Mole Fraction Vapor	%	100				
Mole Fraction Light Liquid	%	0				
Mole Fraction Heavy Liquid	%	0				
Molecular Weight	lb/lbmol	33.5946				
Mass Density	lb/ft^3	0.330287				
Molar Flow	lbmol/h	74.2436				
Mass Flow	lb/h	2494.19				
Vapor Volumetric Flow	ft^3/h	7551.58				
Liquid Volumetric Flow	gpm	941.496				
Std Vapor Volumetric Flow	MMSCFD	0.676182				
Std Liquid Volumetric Flow	sgpm	11.1539				
Compressibility		0.96969				
Specific Gravity		1.15994				
API Gravity						
Enthalpy	Btu/h	-3.13251E+06				
Mass Enthalpy	Btu/lb	-1255.93				
Mass Cp	Btu/(lb*°F)	0.459978				
Ideal Gas CpCv Ratio		1.15066				
Dynamic Viscosity	cP	0.0101396				
Kinematic Viscosity	cSt	1.91651				
Thermal Conductivity	Btu/(h*ft*°F)	0.0153116				
Surface Tension	lbf/ft					
Net Ideal Gas Heating Value	Btu/ft^3	1747.96				
Net Liquid Heating Value	Btu/lb	19601.9				
Gross Ideal Gas Heating Value	Btu/ft^3	1908.74				
Gross Liquid Heating Value	Btu/lb	21418.5				

Remarks

Copyright © 2002-2020 BRE Group, Ltd.
Licensed to Portnoy Environmental, Inc. and Affiliates

Stabilizer
Plant Schematic

Client Name:	COP	Job: Zia Hills Permit Basis
Location:		
Flowsheet:	Stabilizer	

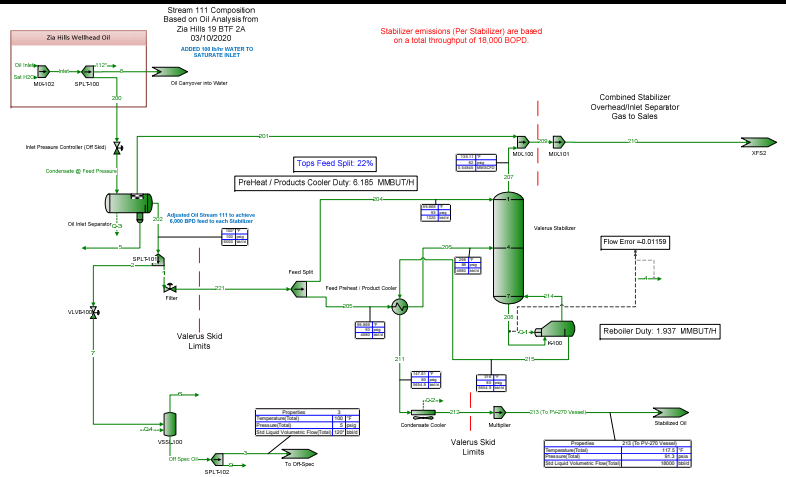

Copyright © 2002-2020 BRE Group, Ltd.
Licensed to Portnoy Environmental, Inc. and Affiliates

Process Streams Report
All Streams
Tabulated by Total Phase

Client Name:	COP	Job: Zia Hills Permit Basis
Location:		
Flowsheet:	Stabilizer	

Connections

	Oil Inlet				
From Block	--				
To Block	MIX-102				

Stream Composition

Mole Fraction	Oil Inlet %				
H2S	0 *				
Nitrogen	0.03 *				
Methane	6.808 *				
Carbon Dioxide	0.048 *				
Ethane	5.009 *				
Propane	6.552 *				
i-Butane	1.87 *				
n-Butane	5.717 *				
i-Pentane	2.774 *				
n-Pentane	3.966 *				
i-Hexane	2.953 *				
n-Hexane	2.962 *				
2,2,4-Trimethylpentane	0.05 *				
Cyclohexane	0 *				
Benzene	0.184 *				
i-Heptane	6.4575 *				
n-Heptane	2.7675 *				
Toluene	0.87 *				
n-Octane	10.89 *				
Ethylbenzene	0.216 *				
meta-Xylene	1.054 *				
n-Nonane	7.278 *				
C10+	31.544 *				
TEG	0 *				
Water	0 *				
Methanol	0 *				

Molar Flow	Oil Inlet lbmol/h				
H2S	0 *				
Nitrogen	0.449816 *				
Methane	102.078 *				
Carbon Dioxide	0.719705 *				
Ethane	75.1043 *				
Propane	98.2398 *				
i-Butane	28.0385 *				
n-Butane	85.7199 *				
i-Pentane	41.593 *				
n-Pentane	59.4657 *				
i-Hexane	44.2769 *				
n-Hexane	44.4118 *				
2,2,4-Trimethylpentane	0.749693 *				
Cyclohexane	0 *				
Benzene	2.75887 *				
i-Heptane	96.8229 *				
n-Heptane	41.4955 *				
Toluene	13.0447 *				
n-Octane	163.283 *				
Ethylbenzene	3.23867 *				
meta-Xylene	15.8035 *				
n-Nonane	109.125 *				
C10+	472.966 *				
TEG	0 *				
Water	0 *				

Copyright © 2002-2020 BRE Group, Ltd.
Licensed to Portnoy Environmental, Inc. and Affiliates

Process Streams Report
All Streams
Tabulated by Total Phase

Client Name:	COP	Job: Zia Hills Permit Basis
Location:		
Flowsheet:	Stabilizer	

Molar Flow	Oil Inlet lbmol/h				
Methanol	0 *				

Mass Fraction	Oil Inlet %				
H2S	0 *				
Nitrogen	0.00624998 *				
Methane	0.812235 *				
Carbon Dioxide	0.0157101 *				
Ethane	1.12011 *				
Propane	2.14863 *				
i-Butane	0.808305 *				
n-Butane	2.47116 *				
i-Pentane	1.48842 *				
n-Pentane	2.12801 *				
i-Hexane	1.89251 *				
n-Hexane	1.89828 *				
2,2,4-Trimethylpentane	0.0424752 *				
Cyclohexane	0 *				
Benzene	0.106887 *				
i-Heptane	4.81207 *				
n-Heptane	2.06232 *				
Toluene	0.596144 *				
n-Octane	9.25111 *				
Ethylbenzene	0.17054 *				
meta-Xylene	0.832172 *				
n-Nonane	6.9419 *				
C10+	60.3948 *				
TEG	0 *				
Water	0 *				
Methanol	0 *				

Mass Flow	Oil Inlet lb/h				
H2S	0 *				
Nitrogen	12.6009 *				
Methane	1637.59 *				
Carbon Dioxide	31.6739 *				
Ethane	2258.31 *				
Propane	4331.94 *				
i-Butane	1629.66 *				
n-Butane	4982.23 *				
i-Pentane	3000.88 *				
n-Pentane	4290.37 *				
i-Hexane	3815.58 *				
n-Hexane	3827.2 *				
2,2,4-Trimethylpentane	85.6363 *				
Cyclohexane	0 *				
Benzene	215.5 *				
i-Heptane	9701.84 *				
n-Heptane	4157.93 *				
Toluene	1201.91 *				
n-Octane	18651.6 *				
Ethylbenzene	343.834 *				
meta-Xylene	1677.78 *				
n-Nonane	13995.9 *				
C10+	121765 *				
TEG	0 *				
Water	0 *				
Methanol	0 *				

Copyright © 2002-2020 BRE Group, Ltd.
Licensed to Portnoy Environmental, Inc. and Affiliates

Process Streams Report
All Streams
Tabulated by Total Phase

Client Name:	COP	Job: Zia Hills Permit Basis
Location:		
Flowsheet:	Stabilizer	

Stream Properties

Property	Units	Oil Inlet				
Temperature	°F	136 *				
Pressure	psig	311 *				
Mole Fraction Vapor	%	0				
Mole Fraction Light Liquid	%	100				
Mole Fraction Heavy Liquid	%	0				
Molecular Weight	lb/lbmol	134.465				
Mass Density	lb/ft^3	45.3738				
Molar Flow	lbmol/h	1499.39				
Mass Flow	lb/h	201615				
Vapor Volumetric Flow	ft^3/h	4443.41				
Liquid Volumetric Flow	gpm	553.984				
Std Vapor Volumetric Flow	MMSCFD	13.6558				
Std Liquid Volumetric Flow	sgpm	539.662 *				
Compressibility		0.150342				
Specific Gravity		0.727509				
API Gravity		53.668				
Enthalpy	Btu/h	-1.71062E+08				
Mass Enthalpy	Btu/lb	-848.461				
Mass Cp	Btu/(lb*°F)	0.524535				
Ideal Gas CpCv Ratio		1.03688				
Dynamic Viscosity	cP	0.533165				
Kinematic Viscosity	cSt	0.73356				
Thermal Conductivity	Btu/(h*ft*°F)	0.0658427				
Surface Tension	lbf/ft	0.00131309 ?				
Net Ideal Gas Heating Value	Btu/ft^3	6686.33				
Net Liquid Heating Value	Btu/lb	18723				
Gross Ideal Gas Heating Value	Btu/ft^3	7162.19				
Gross Liquid Heating Value	Btu/lb	20066				

Remarks

* User Specified Values
? Extrapolated or Approximate Values

ProMax 5.0.20259.0
Copyright © 2002-2020 BRE Group, Ltd.

Licensed to Portnoy Environmental, Inc. and Affiliates

Tanks
Plant Schematic

Client Name:	COP	Job: Zia Hills Permit Basis
Location:		
Flowsheet:	Tanks	

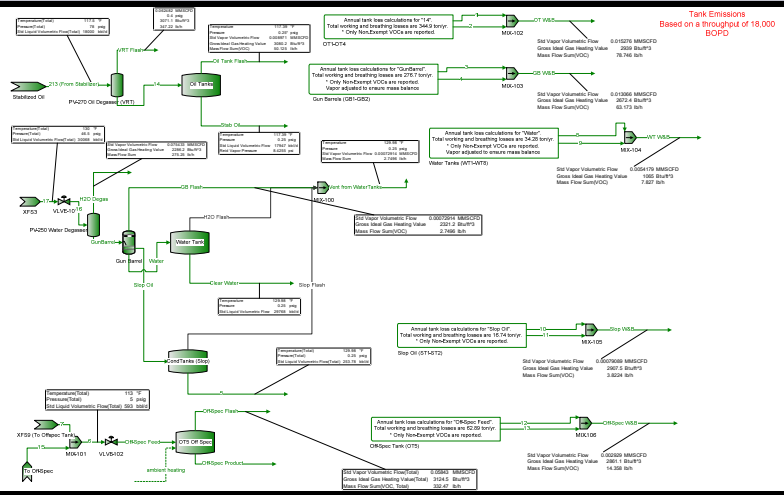

Copyright © 2002-2020 BRE Group, Ltd.
Licensed to Portnoy Environmental, Inc. and Affiliates

Process Streams Report
All Streams
Tabulated by Total Phase

Client Name:	COP	Job: Zia Hills Permit Basis
Location:		
Flowsheet:	Tanks	

Connections

	GB Flash	GB W&B	GunBarrel	H2O Degas	H2O Flash
From Block	Gun Barrel	MIX-103	PV-250 Water Degasser	PV-250 Water Degasser	Water Tank
To Block	MIX-100	--	Gun Barrel	--	MIX-100

Stream Composition

Mole Fraction	GB Flash %	GB W&B %	GunBarrel %	H2O Degas %	H2O Flash %
H2S	0	0	0	0	
Nitrogen	0.067256	0.0145048	8.62577E-07	0.0859483	
Methane	17.0895	6.71301	0.000399213	18.8701	
Carbon Dioxide	0.0800697	0.135414	2.24546E-05	0.076795	
Ethane	12.8152	8.10625	0.000482067	13.31	
Propane	16.3622	16.3544	0.000972572	16.4005	
i-Butane	4.28612	6.60609	0.000445857	4.18903	
n-Butane	12.0769	18.2484	0.00174454	11.6963	
i-Pentane	4.44505	6.20147	0.00133418	4.25363	
n-Pentane	5.68184	7.74226	0.00213271	5.42509	
i-Hexane	2.66203	3.43057	0.00210605	2.53027	
n-Hexane	2.16009	2.69131	0.00227959	2.05115	
2,2,4-Trimethylpentane	0.0168183	0.019837	4.48939E-05	0.0159442	
Cyclohexane	3.40358E-05	4.28778E-05	4.44499E-08	3.23008E-05	
Benzene	0.0720498	0.0949127	0.000162114	0.0683821	
i-Heptane	2.79226	3.33795	0.00559591	2.64797	
n-Heptane	0.908591	1.05424	0.00249215	0.861342	
Toluene	0.196153	0.237174	0.000812923	0.185959	
n-Octane	1.4031	1.50989	0.0105137	1.32951	
Ethylbenzene	0.0225967	0.0247782	0.000210264	0.0214121	
meta-Xylene	0.102249	0.111717	0.00102878	0.0968838	
n-Nonane	0.355988	0.354242	0.00721575	0.337291	
C10+	0.000238183	0.000124083	0.031776	0.000226239	
TEG	2.87599E-11	9.52633E-12	2.00021E-06	2.73177E-11	
Water	16.4037	17.0115	99.9282	15.5462	
Methanol	0	0	0	0	

Molar Flow	GB Flash lbmol/h	GB W&B lbmol/h	GunBarrel lbmol/h	H2O Degas lbmol/h	H2O Flash lbmol/h
H2S	0	0	0	0	0
Nitrogen	5.38441E-05	0.000208091	0.000208091	0.00711862	0
Methane	0.0136816	0.0963074	0.0963074	1.5629	0
Carbon Dioxide	6.41025E-05	0.0019427	0.00541702	0.00636051	0
Ethane	0.0102596	0.116295	0.116295	1.10239	0
Propane	0.0130993	0.234626	0.234626	1.35837	0
i-Butane	0.0034314	0.0947735	0.10756	0.346954	0
n-Butane	0.00966855	0.261798	0.420859	0.968742	0
i-Pentane	0.00355864	0.0889686	0.321861	0.352304	0
n-Pentane	0.00454879	0.111073	0.514501	0.44933	0
i-Hexane	0.00213118	0.0492163	0.50807	0.209568	0
n-Hexane	0.00172934	0.0386105	0.549937	0.169885	0
2,2,4-Trimethylpentane	1.34644E-05	0.000284589	0.0108303	0.00132057	0
Cyclohexane	2.72485E-08	6.15141E-07	1.07232E-05	2.6753E-06	0
Benzene	5.76819E-05	0.00136165	0.0391088	0.00566371	0
i-Heptane	0.00223544	0.0478875	1.34998	0.219316	0
n-Heptane	0.000727404	0.0151245	0.601213	0.0713402	0
Toluene	0.000157037	0.00340259	0.196112	0.015402	0
n-Octane	0.0011233	0.0216614	2.53635	0.110116	0
Ethylbenzene	1.80906E-05	0.000355478	0.0507248	0.00177345	0
meta-Xylene	8.18589E-05	0.00160273	0.248186	0.00802435	0
n-Nonane	0.000284998	0.0050821	1.74075	0.0279359	0
C10+	1.90686E-07	1.78014E-06	7.66575	1.87381E-05	0
TEG	2.30247E-14	1.36668E-13	0.000482537	2.26258E-12	0

Copyright © 2002-2020 BRE Group, Ltd.
Licensed to Portnoy Environmental, Inc. and Affiliates

Process Streams Report
All Streams
Tabulated by Total Phase

Client Name:	COP	Job: Zia Hills Permit Basis
Location:		
Flowsheet:	Tanks	

Molar Flow	GB Flash lbmol/h	GB W&B lbmol/h	GunBarrel lbmol/h	H2O Degas lbmol/h	H2O Flash lbmol/h
Water	0.0131326	0.244053	24107	1.28761	0
Methanol	0	0	0	0	0

Mass Fraction	GB Flash %	GB W&B %	GunBarrel %	H2O Degas %	H2O Flash %
H2S	0	0	0	0	
Nitrogen	0.0428697	0.00801803	1.33325E-06	0.0558363	
Methane	6.23814	2.1251	0.000353364	7.02034	
Carbon Dioxide	0.0801804	0.117599	5.45254E-05	0.0783778	
Ethane	8.76795	4.80984	0.000799786	9.28133	
Propane	16.4169	14.2305	0.00236627	16.7713	
i-Butane	5.6684	7.57666	0.00142983	5.64637	
n-Butane	15.9717	20.9294	0.00559462	15.7654	
i-Pentane	7.29725	8.82907	0.00531115	7.11708	
n-Pentane	9.32764	11.0227	0.00848998	9.07714	
i-Hexane	5.21975	5.83366	0.0100138	5.05666	
n-Hexane	4.23555	4.57655	0.010839	4.09915	
2,2,4-Trimethylpentane	0.0437129	0.0447137	0.000282949	0.0422367	
Cyclohexane	6.51767E-05	7.12076E-05	2.06405E-07	6.3042E-05	
Benzene	0.128057	0.146296	0.000698687	0.123872	
i-Heptane	6.36628	6.60005	0.0309381	6.15321	
n-Heptane	2.07156	2.08452	0.0137783	2.00154	
Toluene	0.411234	0.43122	0.00413273	0.397348	
n-Octane	3.64683	3.40338	0.0662637	3.52193	
Ethylbenzene	0.0545859	0.051909	0.00123167	0.0527174	
meta-Xylene	0.246998	0.234041	0.0060263	0.238532	
n-Nonane	1.03888	0.896533	0.0510626	1.00321	
C10+	0.00139526	0.000630369	0.451375	0.00135074	
TEG	9.82726E-11	2.82299E-11	1.65735E-05	9.5137E-11	
Water	6.72414	6.04748	99.3289	6.495	
Methanol	0	0	0	0	

Mass Flow	GB Flash lb/h	GB W&B lb/h	GunBarrel lb/h	H2O Degas lb/h	H2O Flash lb/h
H2S	0	0	0	0	0
Nitrogen	0.00150836	0.00582933	0.00582933	0.199417	0
Methane	0.219487	1.54501	1.54501	25.0728	0
Carbon Dioxide	0.00282112	0.0854974	0.2384	0.279923	0
Ethane	0.308497	3.49689	3.49689	33.1479	0
Propane	0.577622	10.346	10.346	59.898	0
i-Butane	0.199441	5.50844	6.25162	20.1658	0
n-Butane	0.561958	15.2163	24.4613	56.3054	0
i-Pentane	0.256751	6.41898	23.2219	25.4183	0
n-Pentane	0.32819	8.01381	37.1206	32.4186	0
i-Hexane	0.183655	4.24123	43.7831	18.0596	0
n-Hexane	0.149026	3.32728	47.391	14.6399	0
2,2,4-Trimethylpentane	0.00153802	0.0325081	1.23713	0.150847	0
Cyclohexane	2.29322E-06	5.17699E-05	0.000902462	0.000225152	0
Benzene	0.00450564	0.106361	3.05486	0.442403	0
i-Heptane	0.223995	4.79842	135.27	21.9759	0
n-Heptane	0.0728873	1.5155	60.2427	7.14843	0
Toluene	0.0144691	0.313509	18.0695	1.41911	0
n-Octane	0.128313	2.47435	289.724	12.5784	0
Ethylbenzene	0.00192059	0.0377393	5.3852	0.188278	0
meta-Xylene	0.00869055	0.170154	26.3487	0.851905	0
n-Nonane	0.0365525	0.651805	223.26	3.58292	0
C10+	4.90918E-05	0.000458296	1973.54	0.00482411	0
TEG	3.45769E-12	2.05239E-11	0.0724641	3.39778E-10	0
Water	0.236587	4.39669	434294	23.1966	0
Methanol	0	0	0	0	0

Copyright © 2002-2020 BRE Group, Ltd.
Licensed to Portnoy Environmental, Inc. and Affiliates

Process Streams Report
All Streams
Tabulated by Total Phase

Client Name:	COP	Job: Zia Hills Permit Basis
Location:		
Flowsheet:	Tanks	

Stream Properties

Property	Units	GB Flash	GB W&B	GunBarrel	H2O Degas	H2O Flash
Temperature	°F	129.98	115.838	129.979	129.979	
Pressure	psig	0.25 *	-4.45234	1	1 *	0.25
Mole Fraction Vapor	%	100	100	0	100	
Mole Fraction Light Liquid	%	0	0	0.0704329	0	
Mole Fraction Heavy Liquid	%	0	0	99.9296	0	
Molecular Weight	lb/lbmol	43.9487	50.6767	18.124	43.1208	
Mass Density	lb/ft^3	0.0951934	0.073365	61.3961	0.0985872	
Molar Flow	lbmol/h	0.0800585	1.43464	24124.3	8.28245	0
Mass Flow	lb/h	3.51847	72.7028	437228	357.146	0
Vapor Volumetric Flow	ft^3/h	36.9612	990.974	7121.44	3622.64	0
Liquid Volumetric Flow	gpm	4.60816	123.55	887.868	451.653	0
Std Vapor Volumetric Flow	MMSCFD	0.000729142	0.0130661	219.715	0.0754334	0
Std Liquid Volumetric Flow	sgpm	0.0128573	0.248954	875.658	1.32172	0
Compressibility		0.988601	0.989541	0.000667101	0.988427	
Specific Gravity		1.51744	1.74974	0.984404	1.48885	
API Gravity				10.2584		
Enthalpy	Btu/h	-4596.83	-88997.9	-2.94225E+09	-466612	0
Mass Enthalpy	Btu/lb	-1306.49	-1224.13	-6729.33	-1306.5	
Mass Cp	Btu/(lb*°F)	0.440934	0.426904	0.978945	0.442039	
Ideal Gas CpCv Ratio		1.11482	1.10152	1.32073	1.11698	
Dynamic Viscosity	cP	0.00942896	0.00871405	0.522559	0.00948946	
Kinematic Viscosity	cSt	6.18352	7.41498	0.531342	6.00897	
Thermal Conductivity	Btu/(h*ft*°F)	0.0127395	0.0110089	0.368365	0.0129481	
Surface Tension	lbf/ft			0.00456398		
Net Ideal Gas Heating Value	Btu/ft^3	2130.93	2458.45	6.01563	2098.35	
Net Liquid Heating Value	Btu/lb	18199.7	18209.1	-927.684	18269.3	
Gross Ideal Gas Heating Value	Btu/ft^3	2321.21	2672.36	56.7071	2286.17	
Gross Liquid Heating Value	Btu/lb	19843.1	19811.2	133.706	19922.6	

Remarks

Copyright © 2002-2020 BRE Group, Ltd.
Licensed to Portnoy Environmental, Inc. and Affiliates

Process Streams Report
All Streams
Tabulated by Total Phase

Client Name:	COP	Job: Zia Hills Permit Basis
Location:		
Flowsheet:	Tanks	

Connections

	Off-Spec Feed	Off-Spec Flash	Off-Spec W&B	Oil Tank Flash	OT W&B
From Block	VLVE-102	OT5 Off Spec	MIX-106	Oil Tanks	MIX-102
To Block	OT5 Off Spec	--	--	--	--

Stream Composition

Mole Fraction	Off-Spec Feed %	Off-Spec Flash %	Off-Spec W&B %	Oil Tank Flash %	OT W&B %
H2S	0	0	0	0	0
Nitrogen	0.00133646	0.00987814	0.000823055	2.19112E-05	2.03884E-06
Methane	0.596766	4.33599	1.52162	0.380314	0.110668
Carbon Dioxide	0.00327569	0.0231535	0.0283802	0.0220826	0.0199533
Ethane	1.60299	10.6439	19.166	12.8067	17.0961
Propane	4.8347	26.2894	35.2209	32.1668	35.6869
i-Butane	2.02569	8.33327	8.2257	8.69102	8.22053
n-Butane	6.35935	22.4333	19.9515	23.3747	21.2405
i-Pentane	3.20463	6.80977	4.90895	6.25543	5.33707
n-Pentane	4.57375	8.16799	5.50368	7.16839	5.9621
i-Hexane	2.6084	2.52307	1.45132	2.55826	2.01099
n-Hexane	2.61557	1.96096	1.08122	1.90073	1.48917
2,2,4-Trimethylpentane	0.0120447	0.00380599	0.0017522	0.0124845	0.00875628
Cyclohexane	1.0282	0.655733	0.280982	0	0
Benzene	0.156792	0.111679	0.0420998	0.113486	0.0601427
i-Heptane	5.64643	2.34439	1.08595	2.1559	1.49888
n-Heptane	2.87694	0.888699	0.395545	0.667444	0.458394
Toluene	0.918598	0.239792	0.0804716	0.177953	0.0918291
n-Octane	18.8498	2.20335	0.80871	0.93264	0.563015
Ethylbenzene	0.236682	0.0240132	0.00744192	0.016161	0.008179
meta-Xylene	3.14522	0.289864	0.087107	0.0713942	0.0351589
n-Nonane	12.7993	0.563694	0.148	0.221923	0.101266
C10+	25.7362	0.000198436	2.08395E-05	0.000108533	3.19234E-05
TEG	2.92523E-06	1.02584E-08	9.95326E-12	0	0
Water	0.167271	1.14413	0.00186588	0.306067	0.000399623
Methanol	0	0	0	0	0

Molar Flow	Off-Spec Feed lbmol/h	Off-Spec Flash lbmol/h	Off-Spec W&B lbmol/h	Oil Tank Flash lbmol/h	OT W&B lbmol/h
H2S	0	0	0	0	0
Nitrogen	0.00063938	0.000633735	2.64694E-06	2.15825E-07	3.41961E-08
Methane	0.2855	0.278177	0.00489353	0.00374609	0.00185615
Carbon Dioxide	0.00156713	0.00148542	9.12706E-05	0.000217513	0.000334664
Ethane	0.766887	0.68286	0.0616377	0.126146	0.286741
Propane	2.31297	1.6866	0.11327	0.316843	0.598552
i-Butane	0.969112	0.534623	0.0264538	0.0856066	0.137878
n-Butane	3.04239	1.43921	0.0641639	0.230241	0.356253
i-Pentane	1.53313	0.436882	0.0157871	0.061616	0.0895151
n-Pentane	2.18813	0.524019	0.0176998	0.0706087	0.0999984
i-Hexane	1.24789	0.161868	0.00466744	0.0251989	0.0337291
n-Hexane	1.25132	0.125806	0.0034772	0.0187222	0.0249769
2,2,4-Trimethylpentane	0.00576231	0.000244174	5.63505E-06	0.000122973	0.000146863
Cyclohexane	0.491904	0.0420687	0.000903635	0	0
Benzene	0.075011	0.0071648	0.000135393	0.00111784	0.00100873
i-Heptane	2.70132	0.150405	0.00349239	0.0212356	0.0251398
n-Heptane	1.37636	0.0570147	0.00127207	0.00657433	0.00768833
Toluene	0.439468	0.0153839	0.000258796	0.00175284	0.00154019
n-Octane	9.01798	0.141356	0.00260081	0.00918651	0.00944308
Ethylbenzene	0.113231	0.00154057	2.39332E-05	0.000159186	0.000137181
meta-Xylene	1.50471	0.0185963	0.000280136	0.000703233	0.000589697
n-Nonane	6.12334	0.0361639	0.000475966	0.00218594	0.00169847

Copyright © 2002-2020 BRE Group, Ltd.
Licensed to Portnoy Environmental, Inc. and Affiliates

Process Streams Report
All Streams
Tabulated by Total Phase

Client Name:	COP	Job: Zia Hills Permit Basis
Location:		
Flowsheet:	Tanks	

Molar Flow	Off-Spec Feed lbmol/h	Off-Spec Flash lbmol/h	Off-Spec W&B lbmol/h	Oil Tank Flash lbmol/h	OT W&B lbmol/h
C10+	12.3125	1.27307E-05	6.70198E-08	1.06905E-06	5.3543E-07
TEG	1.39947E-06	6.58127E-10	3.20096E-14	0	0
Water	0.0800244	0.0734022	6.00065E-06	0.00301476	6.70261E-06
Methanol	0	0	0	0	0

Mass Fraction	Off-Spec Feed %	Off-Spec Flash %	Off-Spec W&B %	Oil Tank Flash %	OT W&B %
H2S	0	0	0	0	0
Nitrogen	0.000275462	0.00494693	0.000455058	1.11876E-05	1.09589E-06
Methane	0.070439	1.24352	0.481782	0.111203	0.034065
Carbon Dioxide	0.00106069	0.0182162	0.024651	0.0177133	0.0168492
Ethane	0.35464	5.72155	11.3743	7.01878	9.86354
Propane	1.56857	20.7239	30.6526	25.8528	30.1941
i-Butane	0.866269	8.65869	9.43598	9.207	9.16768
n-Butane	2.71953	23.3093	22.8871	24.7624	23.6878
i-Pentane	1.70116	8.78326	6.9902	8.22604	7.38838
n-Pentane	2.42795	10.5351	7.83708	9.42661	8.25364
i-Hexane	1.65385	3.88693	2.46842	4.01822	3.32515
n-Hexane	1.6584	3.02097	1.83895	2.98543	2.46232
2,2,4-Trimethylpentane	0.010123	0.00777206	0.00395029	0.0259927	0.0191916
Cyclohexane	0.636679	0.986562	0.466717	0	0
Benzene	0.0901111	0.155949	0.0649037	0.161572	0.0901398
i-Heptane	4.16283	4.19953	2.14762	3.9374	2.88178
n-Heptane	2.12102	1.59193	0.782247	1.21898	0.881317
Toluene	0.622737	0.394976	0.146338	0.298849	0.162345
n-Octane	15.8424	4.49937	1.82322	1.94175	1.23399
Ethylbenzene	0.184878	0.0455748	0.0155933	0.031272	0.0166609
meta-Xylene	2.45681	0.550137	0.182519	0.138149	0.0716199
n-Nonane	12.0781	1.29245	0.374635	0.518778	0.249205
C10+	48.75	0.000913284	0.000105889	0.000509281	0.000157695
TEG	3.23214E-06	2.754E-08	2.95005E-11	0	0
Water	0.0221718	0.368478	0.000663432	0.100499	0.000138137
Methanol	0	0	0	0	0

Mass Flow	Off-Spec Feed lb/h	Off-Spec Flash lb/h	Off-Spec W&B lb/h	Oil Tank Flash lb/h	OT W&B lb/h
H2S	0	0	0	0	0
Nitrogen	0.0179112	0.0177531	7.41498E-05	6.04599E-06	9.5795E-07
Methane	4.58012	4.46264	0.0785043	0.0600966	0.0297773
Carbon Dioxide	0.0689684	0.0653725	0.00401677	0.00957265	0.0147284
Ethane	23.0596	20.533	1.85339	3.79309	8.62202
Propane	101.992	74.3718	4.99471	13.9714	26.3935
i-Butane	56.3269	31.0735	1.53755	4.97565	8.01375
n-Butane	176.83	83.6502	3.72935	13.3821	20.7062
i-Pentane	110.614	31.5205	1.13902	4.44552	6.45841
n-Pentane	157.871	37.8074	1.27702	5.09433	7.21476
i-Hexane	107.537	13.9491	0.402218	2.17152	2.90661
n-Hexane	107.833	10.8414	0.299649	1.61339	2.15239
2,2,4-Trimethylpentane	0.65822	0.0278916	0.000643684	0.014047	0.016776
Cyclohexane	41.3984	3.54048	0.0760495	0	0
Benzene	5.85925	0.559656	0.0105758	0.0873165	0.078794
i-Heptane	270.677	15.0709	0.349945	2.12785	2.51905
n-Heptane	137.914	5.71298	0.127464	0.65876	0.770386
Toluene	40.4919	1.41745	0.0238451	0.161504	0.14191
n-Octane	1030.11	16.1469	0.297086	1.04936	1.07867
Ethylbenzene	12.0212	0.163555	0.00254087	0.0169	0.0145638
meta-Xylene	159.748	1.97428	0.0297406	0.0746588	0.0626051
n-Nonane	785.349	4.63821	0.0610451	0.280358	0.217838

Copyright © 2002-2020 BRE Group, Ltd.
Licensed to Portnoy Environmental, Inc. and Affiliates

Process Streams Report
All Streams
Tabulated by Total Phase

Client Name:	COP	Job: Zia Hills Permit Basis
Location:		
Flowsheet:	Tanks	

Mass Flow	Off-Spec Feed lb/h	Off-Spec Flash lb/h	Off-Spec W&B lb/h	Oil Tank Flash lb/h	OT W&B lb/h
C10+	3169.84	0.00327751	1.72542E-05	0.000275226	0.000137846
TEG	0.000210162	9.88329E-08	4.80698E-12	0	0
Water	1.44166	1.32236	0.000108103	0.0543118	0.000120749
Methanol	0	0	0	0	0

Stream Properties

Property	Units	Off-Spec Feed	Off-Spec Flash	Off-Spec W&B	Oil Tank Flash	OT W&B
Temperature	°F	109.773	133.834	107.642	117.392	108.771
Pressure	psig	0.25 *	0.25	6.92431	0.25 *	6.9024
Mole Fraction Vapor	%	9.15079	100	100	100	100
Mole Fraction Light Liquid	%	90.8492	0	0	0	0
Mole Fraction Heavy Liquid	%	0	0	0	0	0
Molecular Weight	lb/lbmol	135.913	55.9378	50.6673	54.865	52.1174
Mass Density	lb/ft^3	3.13063	0.121155	0.172674	0.122324	0.177296
Molar Flow	lbmol/h	47.8412	6.41552	0.321599	0.985	1.67723
Mass Flow	lb/h	6502.24	358.871	16.2946	54.042	87.413
Vapor Volumetric Flow	ft^3/h	2076.98	2962.07	94.366	441.794	493.035
Liquid Volumetric Flow	gpm	258.948	369.297	11.7651	55.0808	61.4693
Std Vapor Volumetric Flow	MMSCFD	0.435719	0.0584302	0.002929	0.00897101	0.0152756
Std Liquid Volumetric Flow	sgpm	17.305	1.27097	0.0614084	0.194869	0.324784
Compressibility		0.0962622	0.982235	0.97474	0.981378	0.973504
Specific Gravity			1.93139	1.74941	1.89434	1.79948
API Gravity						
Enthalpy	Btu/h	-5.49403E+06	-336177	-15793.1	-50899.9	-83903
Mass Enthalpy	Btu/lb	-844.944	-936.765	-969.225	-941.857	-959.845
Mass Cp	Btu/(lb*°F)	0.502737	0.435315	0.423146	0.426377	0.423599
Ideal Gas CpCv Ratio		1.03809	1.0894	1.10321	1.09345	1.09996
Dynamic Viscosity	cP		0.00850935	0.00842384	0.00831063	0.00835329
Kinematic Viscosity	cSt		4.38463	3.04552	4.24132	2.94129
Thermal Conductivity	Btu/(h*ft*°F)		0.0115743	0.0110096	0.0109302	0.010869
Surface Tension	lbf/ft					
Net Ideal Gas Heating Value	Btu/ft^3	6765.41	2883.07	2636.94	2841.34	2709.49
Net Liquid Heating Value	Btu/lb	18739.3	19404.1	19594.6	19498.2	19573.7
Gross Ideal Gas Heating Value	Btu/ft^3	7250.77	3124.54	2861.08	3080.22	2939.01
Gross Liquid Heating Value	Btu/lb	20094.5	21042.5	21273.7	21150.8	21245.2

Remarks

Copyright © 2002-2020 BRE Group, Ltd.
Licensed to Portnoy Environmental, Inc. and Affiliates

Process Streams Report
All Streams
Tabulated by Total Phase

Client Name:	COP	Job: Zia Hills Permit Basis
Location:		
Flowsheet:	Tanks	

Connections

	Slop Flash	Slop Oil	Slop W&B	VRT Flash	WT W&B
From Block	CondTanks (Slop)	Gun Barrel	MIX-105	PV-270 Oil Degasser (VRT)	MIX-104
To Block	MIX-100	CondTanks (Slop)	--	--	--

Stream Composition

Mole Fraction	Slop Flash %	Slop Oil %	Slop W&B %	VRT Flash %	WT W&B %
H2S		0	0	0	0
Nitrogen		9.4997E-05	0.00584083	3.32787E-05	0.0232231
Methane		0.0707509	5.88411	0.442856	11.8741
Carbon Dioxide		0.000674947	0.0900435	0.0236817	0.393854
Ethane		0.248941	21.9326	13.1225	10.7332
Propane		0.975436	26.5467	32.1836	9.45139
i-Butane		0.568184	5.94045	8.64273	1.31803
n-Butane		2.19814	15.9949	23.2143	6.50235
i-Pentane		1.82945	5.55168	6.20151	1.3905
n-Pentane		2.97122	6.92417	7.10485	1.08109
i-Hexane		2.96596	3.06477	2.53445	0.556234
n-Hexane		3.22609	2.46874	1.88298	0.251195
2,2,4-Trimethylpentane		0.0637917	0.0172019	0.0123681	0.00106692
Cyclohexane		6.1361E-05	3.11632E-05	0	4.99906E-05
Benzene		0.113537	0.0572865	0.112423	0.303072
i-Heptane		7.94391	2.84073	2.13575	0.255014
n-Heptane		3.54111	0.912202	0.661253	0.0650759
Toluene		0.908508	0.150564	0.176294	0.836797
n-Octane		14.9583	1.25522	0.924201	0.0515824
Ethylbenzene		0.277721	0.0169848	0.0160142	0.0912432
meta-Xylene		1.38644	0.0749222	0.0707467	0.443393
n-Nonane		10.27	0.231493	0.21997	0.00709997
C10+		45.2347	0.000104262	0.000107881	2.88564E-05
TEG		1.53347E-08	1.4397E-13	0	3.73597E-11
Water		0.246989	0.0392862	0.31736	54.3704
Methanol		0	0	0	0

Molar Flow	Slop Flash lbmol/h	Slop Oil lbmol/h	Slop W&B lbmol/h	VRT Flash lbmol/h	WT W&B lbmol/h
H2S	0	0	0	0	0
Nitrogen	0	1.60988E-05	5.07207E-06	2.28305E-06	0.000138148
Methane	0	0.0119899	0.00510966	0.0303816	0.0706359
Carbon Dioxide	0	0.000114381	7.81922E-05	0.00162466	0.00234292
Ethane	0	0.0421871	0.0190458	0.900258	0.0638486
Propane	0	0.165303	0.0230527	2.20792	0.0562236
i-Butane	0	0.096288	0.00515858	0.592925	0.00784059
n-Butane	0	0.37251	0.0138897	1.59259	0.0386807
i-Pentane	0	0.31003	0.00482098	0.425448	0.0082717
n-Pentane	0	0.503521	0.00601283	0.48742	0.0064311
i-Hexane	0	0.50263	0.00266139	0.173873	0.00330888
n-Hexane	0	0.546713	0.00214381	0.12918	0.00149429
2,2,4-Trimethylpentane	0	0.0108105	1.49378E-05	0.000848499	6.34678E-06
Cyclohexane	0	1.03986E-05	2.70616E-08	0	2.9738E-07
Benzene	0	0.0192407	4.97466E-05	0.00771264	0.00180289
i-Heptane	0	1.34622	0.00246684	0.146521	0.001517
n-Heptane	0	0.600099	0.00079214	0.0453646	0.000387118
Toluene	0	0.153961	0.000130747	0.0120945	0.00497787
n-Octane	0	2.53492	0.00109001	0.0634038	0.000306849
Ethylbenzene	0	0.0470643	1.47493E-05	0.00109864	0.00054278
meta-Xylene	0	0.234954	6.50611E-05	0.0048535	0.00263762
n-Nonane	0	1.74042	0.000201024	0.0150908	4.22357E-05

Copyright © 2002-2020 BRE Group, Ltd.
Licensed to Portnoy Environmental, Inc. and Affiliates

Process Streams Report
All Streams
Tabulated by Total Phase

Client Name:	COP	Job: Zia Hills Permit Basis
Location:		
Flowsheet:	Tanks	

Molar Flow	Slop Flash lbmol/h	Slop Oil lbmol/h	Slop W&B lbmol/h	VRT Flash lbmol/h	WT W&B lbmol/h
C10+	0	7.66575	9.05394E-08	7.40103E-06	1.71659E-07
TEG	0	2.5987E-09	1.25021E-16	0	2.22242E-13
Water	0	0.0418563	3.41155E-05	0.0217722	0.323434
Methanol	0	0	0	0	0

Mass Fraction	Slop Flash %	Slop Oil %	Slop W&B %	VRT Flash %	WT W&B %
H2S		0	0	0	0
Nitrogen		1.54759E-05	0.00317069	1.70441E-05	0.0230168
Methane		0.00660059	1.82922	0.12989	6.73954
Carbon Dioxide		0.000172741	0.0767914	0.0190546	0.613252
Ethane		0.0435308	12.7797	7.21405	11.4184
Propane		0.250135	22.684	25.946	14.7451
i-Butane		0.192049	6.69075	9.18405	2.71035
n-Butane		0.74298	18.0151	24.6683	13.3712
i-Pentane		0.767592	7.76188	8.18028	3.54943
n-Pentane		1.24665	9.68078	9.37185	2.75962
i-Hexane		1.48638	5.11793	3.99307	1.69589
n-Hexane		1.61674	4.1226	2.96668	0.765864
2,2,4-Trimethylpentane		0.0423759	0.0380771	0.0258297	0.00431183
Cyclohexane		3.00314E-05	5.08228E-05	0	0.00014885
Benzene		0.0515745	0.0867127	0.160551	0.837567
i-Heptane		4.62903	5.51593	3.91263	0.90406
n-Heptane		2.06346	1.77125	1.21139	0.230703
Toluene		0.486799	0.268828	0.296975	2.72784
n-Octane		9.93657	2.77849	1.93011	0.208465
Ethylbenzene		0.171463	0.0349427	0.0310833	0.34272
meta-Xylene		0.855976	0.154136	0.137318	1.66543
n-Nonane		7.65996	0.575342	0.515798	0.0322173
C10+		67.724	0.000520153	0.00050778	0.00026284
TEG		1.3392E-08	4.18966E-13	0	1.98496E-10
Water		0.0258761	0.013715	0.104529	34.6546
Methanol		0	0	0	0

Mass Flow	Slop Flash lb/h	Slop Oil lb/h	Slop W&B lb/h	VRT Flash lb/h	WT W&B lb/h
H2S	0	0	0	0	0
Nitrogen	0	0.000450981	0.000142086	6.3956E-05	0.00386999
Methane	0	0.192347	0.0819715	0.487396	1.13317
Carbon Dioxide	0	0.00503383	0.0034412	0.0715004	0.103111
Ethane	0	1.26852	0.57269	27.0699	1.91987
Propane	0	7.28916	1.01652	97.3596	2.47922
i-Butane	0	5.59647	0.299828	34.4621	0.455713
n-Butane	0	21.6511	0.8073	92.5649	2.2482
i-Pentane	0	22.3683	0.347828	30.6956	0.596793
n-Pentane	0	36.3284	0.433818	35.1668	0.463996
i-Hexane	0	43.3143	0.229347	14.9836	0.285144
n-Hexane	0	47.1132	0.184743	11.1321	0.128771
2,2,4-Trimethylpentane	0	1.23487	0.00170632	0.0969228	0.000724983
Cyclohexane	0	0.000875141	2.27749E-06	0	2.50273E-05
Benzene	0	1.50293	0.0038858	0.602449	0.140827
i-Heptane	0	134.894	0.247182	14.6817	0.152007
n-Heptane	0	60.131	0.079374	4.54562	0.03879
Toluene	0	14.1857	0.0120468	1.11437	0.458653
n-Octane	0	289.56	0.124511	7.24252	0.035051
Ethylbenzene	0	4.99658	0.00156586	0.116637	0.0576242
meta-Xylene	0	24.9439	0.00690721	0.515272	0.280023
n-Nonane	0	223.218	0.0257824	1.93547	0.00541695
C10+	0	1973.54	2.33093E-05	0.00190539	4.41934E-05
TEG	0	3.90255E-07	1.87748E-14	0	3.33747E-11

Copyright © 2002-2020 BRE Group, Ltd.
Licensed to Portnoy Environmental, Inc. and Affiliates

Process Streams Report
All Streams
Tabulated by Total Phase

Client Name:	COP	Job: Zia Hills Permit Basis
Location:		
Flowsheet:	Tanks	

Mass Flow	Slop Flash lb/h	Slop Oil lb/h	Slop W&B lb/h	VRT Flash lb/h	WT W&B lb/h
Water	0	0.754052	0.0006146	0.392232	5.82676
Methanol	0	0	0	0	0

Stream Properties

Property	Units	Slop Flash	Slop Oil	Slop W&B	VRT Flash	WT W&B
Temperature	°F		129.98	120.098	117.471	119.957
Pressure	psig	0.25	0.25	0.627361	0.4 *	-10.1858
Mole Fraction Vapor	%		0	100	100	100
Mole Fraction Light Liquid	%		100	0	0	0
Mole Fraction Heavy Liquid	%		0	0	0	0
Molecular Weight	lb/lbmol		171.957	51.6044	54.6964	28.2646
Mass Density	lb/ft^3		47.3456	0.117482	0.123293	0.0141758
Molar Flow	lbmol/h	0	16.9466	0.0868383	6.86039	0.594872
Mass Flow	lb/h	0	2914.09	4.48123	375.239	16.8138
Vapor Volumetric Flow	ft^3/h	0	61.5492	38.1439	3043.47	1186.09
Liquid Volumetric Flow	gpm	0	7.67367	4.7556	379.446	147.876
Std Vapor Volumetric Flow	MMSCFD	0	0.154343	0.00079089	0.0624818	0.00541787
Std Liquid Volumetric Flow	sgpm	0	7.4018	0.0167824	1.35531	0.0567735
Compressibility			0.00777717	0.983252	0.981286	0.998211
Specific Gravity			0.759125	1.78177	1.88852	0.975903
API Gravity			47.7497			
Enthalpy	Btu/h	0	-2.39215E+06	-4316.65	-353862	-44667.4
Mass Enthalpy	Btu/lb		-820.891	-963.273	-943.033	-2656.59
Mass Cp	Btu/(lb*°F)		0.509887	0.430278	0.426509	0.435943
Ideal Gas CpCv Ratio			1.02908	1.09891	1.09374	1.19239
Dynamic Viscosity	cP		0.931193	0.00857016	0.00832192	0.0107647
Kinematic Viscosity	cSt		1.22783	4.55403	4.21371	47.4061
Thermal Conductivity	Btu/(h*ft*°F)		0.0685956	0.0116044	0.0109504	0.0130651
Surface Tension	lbf/ft		0.0016009			
Net Ideal Gas Heating Value	Btu/ft^3		8502.72	2680.17	2832.85	955.535
Net Liquid Heating Value	Btu/lb		18615.9	19561.3	19499.9	12369.6
Gross Ideal Gas Heating Value	Btu/ft^3		9092.77	2907.5	3071.12	1065.03
Gross Liquid Heating Value	Btu/lb		19918.1	21233.5	21153.4	13840.1

Remarks

Copyright © 2002-2020 BRE Group, Ltd.
Licensed to Portnoy Environmental, Inc. and Affiliates

Process Streams Report
All Streams
Tabulated by Total Phase

Client Name:	COP	Job: Zia Hills Permit Basis
Location:		
Flowsheet:	Tanks	

Connections

	2	4	9	11	13
From Block	--	--	--	--	--
To Block	MIX-102	MIX-103	MIX-104	MIX-105	MIX-106

Stream Composition

Mole Fraction	2 %	4 %	9 %	11 %	13 %
H2S	0 *	0 *	0 *	0 *	0 *
Nitrogen	2.03884E-06 *	0.0145048 *	0.0232231 *	0.00584083 *	0.000823055 *
Methane	0.110668 *	6.71301 *	11.8741 *	5.88411 *	1.52162 *
Carbon Dioxide	0.0199533 *	0.135414 *	0.393854 *	0.0900435 *	0.0283802 *
Ethane	17.0961 *	8.10625 *	10.7332 *	21.9326 *	19.166 *
Propane	35.6869 *	16.3544 *	9.45139 *	26.5467 *	35.2209 *
i-Butane	8.22053 *	6.60609 *	1.31803 *	5.94045 *	8.2257 *
n-Butane	21.2405 *	18.2484 *	6.50235 *	15.9949 *	19.9515 *
i-Pentane	5.33707 *	6.20147 *	1.3905 *	5.55168 *	4.90895 *
n-Pentane	5.9621 *	7.74226 *	1.08109 *	6.92417 *	5.50368 *
i-Hexane	2.01099 *	3.43057 *	0.556234 *	3.06477 *	1.45132 *
n-Hexane	1.48917 *	2.69131 *	0.251195 *	2.46874 *	1.08122 *
2,2,4-Trimethylpentane	0.00875628 *	0.019837 *	0.00106692 *	0.0172019 *	0.0017522 *
Cyclohexane	0 *	4.28778E-05 *	4.99906E-05 *	3.11632E-05 *	0.280982 *
Benzene	0.0601427 *	0.0949127 *	0.303072 *	0.0572865 *	0.0420998 *
i-Heptane	1.49888 *	3.33795 *	0.255014 *	2.84073 *	1.08595 *
n-Heptane	0.458394 *	1.05424 *	0.0650759 *	0.912202 *	0.395545 *
Toluene	0.0918291 *	0.237174 *	0.836797 *	0.150564 *	0.0804716 *
n-Octane	0.563015 *	1.50989 *	0.0515824 *	1.25522 *	0.80871 *
Ethylbenzene	0.008179 *	0.0247782 *	0.0912432 *	0.0169848 *	0.00744192 *
meta-Xylene	0.0351589 *	0.111717 *	0.443393 *	0.0749222 *	0.087107 *
n-Nonane	0.101266 *	0.354242 *	0.00709997 *	0.231493 *	0.148 *
C10+	3.19234E-05 *	0.000124083 *	2.88564E-05 *	0.000104262 *	2.08395E-05 *
TEG	0 *	9.52633E-12 *	3.73597E-11 *	1.4397E-13 *	9.95326E-12 *
Water	0.000399623 *	17.0115 *	54.3704 *	0.0392862 *	0.00186588 *
Methanol	0 *	0 *	0 *	0 *	0 *

Molar Flow	2 lbmol/h	4 lbmol/h	9 lbmol/h	11 lbmol/h	13 lbmol/h
H2S	0 *	0 *	0 *	0 *	0 *
Nitrogen	1.91096E-09 *	4.26252E-06 *	1.59858E-05 *	1.81055E-06 *	3.39744E-07 *
Methane	0.000103726 *	0.00197275 *	0.00817366 *	0.00182396 *	0.000628103 *
Carbon Dioxide	1.87018E-05 *	3.97942E-05 *	0.000271112 *	2.79118E-05 *	1.17149E-05 *
Ethane	0.0160238 *	0.00238218 *	0.00738827 *	0.00679868 *	0.00791143 *
Propane	0.0334486 *	0.00480607 *	0.00650594 *	0.00822898 *	0.0145386 *
i-Butane	0.00770493 *	0.00194133 *	0.000907277 *	0.00184143 *	0.00339544 *
n-Butane	0.0199083 *	0.00536265 *	0.00447595 *	0.00495812 *	0.00823568 *
i-Pentane	0.00500232 *	0.00182243 *	0.000957163 *	0.00172092 *	0.00202634 *
n-Pentane	0.00558815 *	0.00227522 *	0.000744177 *	0.00214636 *	0.00227183 *
i-Hexane	0.00188486 *	0.00100814 *	0.000382888 *	0.000950021 *	0.000599083 *
n-Hexane	0.00139577 *	0.000790895 *	0.000172912 *	0.000765262 *	0.000446312 *
2,2,4-Trimethylpentane	8.20708E-06 *	5.82949E-06 *	7.3442E-07 *	5.33225E-06 *	7.2328E-07 *
Cyclohexane	0 *	1.26005E-08 *	3.44114E-08 *	9.66001E-09 *	0.000115985 *
Benzene	5.63704E-05 *	2.7892E-05 *	0.000208622 *	1.77577E-05 *	1.73782E-05 *
i-Heptane	0.00140487 *	0.000980924 *	0.000175541 *	0.000880572 *	0.000448262 *
n-Heptane	0.000429643 *	0.000309809 *	4.47955E-05 *	0.000282765 *	0.000163275 *
Toluene	8.60695E-05 *	6.96984E-05 *	0.000576016 *	4.66719E-05 *	3.32175E-05 *
n-Octane	0.000527702 *	0.000443711 *	3.55072E-05 *	0.000389095 *	0.000333823 *
Ethylbenzene	7.666E-06 *	7.28157E-06 *	6.2808E-05 *	5.26498E-06 *	3.07191E-06 *
meta-Xylene	3.29537E-05 *	3.28303E-05 *	0.000305213 *	2.32245E-05 *	3.59565E-05 *
n-Nonane	9.49148E-05 *	0.000104101 *	4.88732E-06 *	7.17584E-05 *	6.10921E-05 *
C10+	2.99212E-08 *	3.64643E-08 *	1.98635E-08 *	3.23193E-08 *	8.60225E-09 *
TEG	0 *	2.7995E-15 *	2.57168E-14 *	4.46281E-17 *	4.10855E-15 *
Water	3.74558E-07 *	0.00499917 *	0.0374263 *	1.2178E-05 *	7.70206E-07 *

Copyright © 2002-2020 BRE Group, Ltd.
Licensed to Portnoy Environmental, Inc. and Affiliates

Process Streams Report
All Streams
Tabulated by Total Phase

Client Name:	COP	Job: Zia Hills Permit Basis
Location:		
Flowsheet:	Tanks	

Molar Flow	2 lbmol/h	4 lbmol/h	9 lbmol/h	11 lbmol/h	13 lbmol/h
Methanol	0 *	0 *	0 *	0 *	0 *

Mass Fraction	2 %	4 %	9 %	11 %	13 %
H2S	0	0	0	0	0
Nitrogen	1.09589E-06	0.00801803	0.0230168	0.00317069	0.000455058
Methane	0.034065	2.1251	6.73954	1.82922	0.481782
Carbon Dioxide	0.0168492	0.117599	0.613252	0.0767914	0.024651
Ethane	9.86354	4.80984	11.4184	12.7797	11.3743
Propane	30.1941	14.2305	14.7451	22.684	30.6526
i-Butane	9.16768	7.57666	2.71035	6.69075	9.43598
n-Butane	23.6878	20.9294	13.3712	18.0151	22.8871
i-Pentane	7.38838	8.82907	3.54943	7.76188	6.9902
n-Pentane	8.25364	11.0227	2.75962	9.68078	7.83708
i-Hexane	3.32515	5.83366	1.69589	5.11793	2.46842
n-Hexane	2.46232	4.57655	0.765864	4.1226	1.83895
2,2,4-Trimethylpentane	0.0191916	0.0447137	0.00431183	0.0380771	0.00395029
Cyclohexane	0	7.12076E-05	0.00014885	5.08228E-05	0.466717
Benzene	0.0901398	0.146296	0.837567	0.0867127	0.0649037
i-Heptane	2.88178	6.60005	0.90406	5.51593	2.14762
n-Heptane	0.881317	2.08452	0.230703	1.77125	0.782247
Toluene	0.162345	0.43122	2.72784	0.268828	0.146338
n-Octane	1.23399	3.40338	0.208465	2.77849	1.82322
Ethylbenzene	0.0166609	0.051909	0.34272	0.0349427	0.0155933
meta-Xylene	0.0716199	0.234041	1.66543	0.154136	0.182519
n-Nonane	0.249205	0.896533	0.0322173	0.575342	0.374635
C10+	0.000157695	0.000630369	0.00026284	0.000520153	0.000105889
TEG	0	2.82299E-11	1.98496E-10	4.18966E-13	2.95005E-11
Water	0.000138137	6.04748	34.6546	0.013715	0.000663432
Methanol	0	0	0	0	0

Mass Flow	2 lb/h	4 lb/h	9 lb/h	11 lb/h	13 lb/h
H2S	0 *	0 *	0 *	0 *	0 *
Nitrogen	5.35326E-08 *	0.000119408 *	0.000447818 *	5.07196E-05 *	9.5174E-06 *
Methane	0.00166403 *	0.0316478 *	0.131126 *	0.0292608 *	0.0100763 *
Carbon Dioxide	0.000823058 *	0.00175132 *	0.0119315 *	0.00122838 *	0.000515568 *
Ethane	0.48182 *	0.07163 *	0.222158 *	0.20443 *	0.237889 *
Propane	1.47494 *	0.211927 *	0.286883 *	0.362862 *	0.64109 *
i-Butane	0.447828 *	0.112834 *	0.0527329 *	0.107028 *	0.197351 *
n-Butane	1.15711 *	0.311689 *	0.260152 *	0.288177 *	0.478676 *
i-Pentane	0.360911 *	0.131486 *	0.0690581 *	0.124162 *	0.146198 *
n-Pentane	0.403178 *	0.164154 *	0.0536915 *	0.154857 *	0.16391 *
i-Hexane	0.162429 *	0.0868771 *	0.0329955 *	0.0818684 *	0.0516262 *
n-Hexane	0.120281 *	0.0681557 *	0.0149008 *	0.0659467 *	0.0384611 *
2,2,4-Trimethylpentane	0.000937483 *	0.000665894 *	8.38917E-05 *	0.000609095 *	8.26192E-05 *
Cyclohexane	0 *	1.06045E-06 *	2.89604E-06 *	8.12982E-07 *	0.00976123 *
Benzene	0.0044032 *	0.0021787 *	0.0162958 *	0.00138709 *	0.00135744 *
i-Heptane	0.140771 *	0.0982905 *	0.0175895 *	0.088235 *	0.0449167 *
n-Heptane	0.043051 *	0.0310434 *	0.0044886 *	0.0283336 *	0.0163605 *
Toluene	0.0079303 *	0.0064219 *	0.0530732 *	0.00430027 *	0.0030606 *
n-Octane	0.0602786 *	0.0506845 *	0.00405593 *	0.0444458 *	0.0381321 *
Ethylbenzene	0.000813861 *	0.000773048 *	0.00666801 *	0.000558957 *	0.000326129 *
meta-Xylene	0.00349853 *	0.00348543 *	0.0324029 *	0.00246562 *	0.00381732 *
n-Nonane	0.0121733 *	0.0133515 *	0.000626824 *	0.00920339 *	0.00783537 *
C10+	7.70317E-06 *	9.38769E-06 *	5.11385E-06 *	8.32057E-06 *	2.21464E-06 *
TEG	0 *	4.2041E-13 *	3.86197E-12 *	6.70193E-15 *	6.16994E-13 *
Water	6.74777E-06 *	0.0900614 *	0.674245 *	0.00021939 *	1.38755E-05 *
Methanol	0 *	0 *	0 *	0 *	0 *

Copyright © 2002-2020 BRE Group, Ltd.
Licensed to Portnoy Environmental, Inc. and Affiliates

Process Streams Report
All Streams
Tabulated by Total Phase

Client Name:	COP	Job: Zia Hills Permit Basis
Location:		
Flowsheet:	Tanks	

Stream Properties

Property	Units	2	4	9	11	13
Temperature	°F	108.771	115.838	119.957	120.098	107.642
Pressure	psig	6.9024	-4.45234	-10.1858	0.627361	6.92431
Mole Fraction Vapor	%	100	100	100	100	100
Mole Fraction Light Liquid	%	0	0	0	0	0
Mole Fraction Heavy Liquid	%	0	0	0	0	0
Molecular Weight	lb/lbmol	52.1174	50.6767	28.2646	51.6044	50.6673
Mass Density	lb/ft^3	0.177296	0.073365	0.0141758	0.117482	0.172674
Molar Flow	lbmol/h	0.0937279	0.029387	0.0688358	0.0309981	0.0412785
Mass Flow	lb/h	4.88485	1.48924	1.94561	1.59964	2.09147
Vapor Volumetric Flow	ft^3/h	27.552	20.299	137.249	13.616	12.1122
Liquid Volumetric Flow	gpm	3.43505	2.53079	17.1115	1.69758	1.5101
Std Vapor Volumetric Flow	MMSCFD	0.000853638	0.000267646	0.00062693	0.000282319	0.000375949
Std Liquid Volumetric Flow	sgpm	0.0181497	0.00509955	0.00656957	0.00599071	0.007882
Compressibility		0.973504	0.989541	0.998211	0.983252	0.97474
Specific Gravity		1.79948	1.74974	0.975903	1.78177	1.74941
API Gravity						
Enthalpy	Btu/h	-4688.7	-1823.03	-5168.7	-1540.89	-2027.1
Mass Enthalpy	Btu/lb	-959.845	-1224.13	-2656.59	-963.273	-969.225
Mass Cp	Btu/(lb*°F)	0.423599	0.426904	0.435943	0.430278	0.423146
Ideal Gas CpCv Ratio		1.09996	1.10152	1.19239	1.09891	1.10321
Dynamic Viscosity	cP	0.00835329	0.00871405	0.0107647	0.00857016	0.00842384
Kinematic Viscosity	cSt	2.94129	7.41498	47.4061	4.55403	3.04552
Thermal Conductivity	Btu/(h*ft*°F)	0.010869	0.0110089	0.0130651	0.0116044	0.0110096
Surface Tension	lbf/ft					
Net Ideal Gas Heating Value	Btu/ft^3	2709.49	2458.45	955.535	2680.17	2636.94
Net Liquid Heating Value	Btu/lb	19573.7	18209.1	12369.6	19561.3	19594.6
Gross Ideal Gas Heating Value	Btu/ft^3	2939.01	2672.36	1065.03	2907.5	2861.08
Gross Liquid Heating Value	Btu/lb	21245.2	19811.2	13840.1	21233.5	21273.7

Remarks

Copyright © 2002-2020 BRE Group, Ltd.
Licensed to Portnoy Environmental, Inc. and Affiliates

20MM
Plant Schematic

Client Name:	COP	Job: Zia Hills Permit Basis
Location:		
Flowsheet:	20MM	

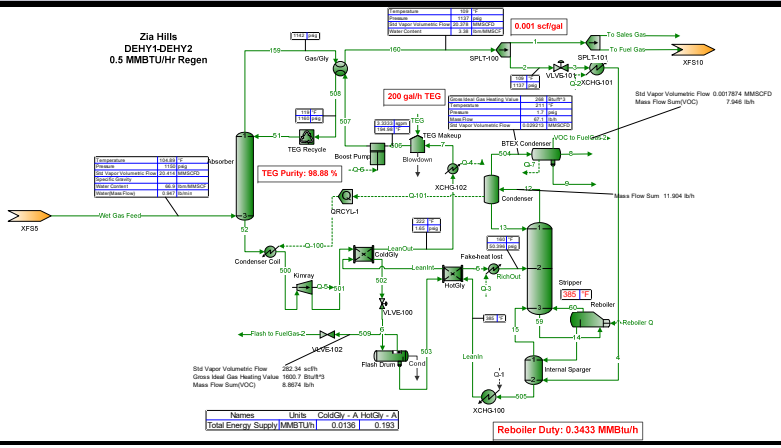

Copyright © 2002-2020 BRE Group, Ltd.
Licensed to Portnoy Environmental, Inc. and Affiliates

Process Streams Report
All Streams
Tabulated by Total Phase

Client Name:	COP	Job: Zia Hills Permit Basis
Location:		
Flowsheet:	20MM	

Connections

	12	509			
From Block	Stripper	Flash Drum			
To Block	Condenser	VLVE-102			

Stream Composition

Mole Fraction	12 %	509 %			
H2S	0	0			
Nitrogen	0.000803374	0.246557			
Methane	0.654634	55.6499			
Carbon Dioxide	0.055924	0.445319			
Ethane	0.893845	20.7317			
Propane	1.08789	12.7099			
i-Butane	0.21472	1.82775			
n-Butane	0.863968	4.82689			
i-Pentane	0.312427	1.0559			
n-Pentane	0.433351	1.21422			
i-Hexane	0.161242	0.270655			
n-Hexane	0.147039	0.191092			
2,2,4-Trimethylpentane	9.00798E-05	7.02772E-05			
Cyclohexane	0.237901	0.106225			
Benzene	0.259989	0.0198927			
i-Heptane	0.152329	0.153755			
n-Heptane	0.068164	0.0506156			
Toluene	0.530836	0.0208747			
n-Octane	0.135379	0.0568974			
Ethylbenzene	0.0317974	0.000747026			
meta-Xylene	0.412932	0.00936857			
n-Nonane	0.0184956	0.00417628			
C10+	1.46258E-07	5.4529E-10			
TEG	0.0511016	0.00011579			
Water	93.2751	0.407346			
Methanol	0	0			

Molar Flow	12 lbmol/h	509 lbmol/h			
H2S	0	0			
Nitrogen	2.60263E-05	0.00183444			
Methane	0.0212077	0.414047			
Carbon Dioxide	0.00181173	0.00331327			
Ethane	0.0289573	0.154248			
Propane	0.0352437	0.0945643			
i-Butane	0.00695612	0.0135989			
n-Butane	0.0279894	0.035913			
i-Pentane	0.0101215	0.00785613			
n-Pentane	0.014039	0.00903408			
i-Hexane	0.00522366	0.00201373			
n-Hexane	0.00476353	0.00142176			
2,2,4-Trimethylpentane	2.91825E-06	5.22877E-07			
Cyclohexane	0.00770713	0.000790332			
Benzene	0.00842267	0.000148006			
i-Heptane	0.00493489	0.00114397			
n-Heptane	0.00220826	0.00037659			
Toluene	0.0171971	0.000155312			
n-Octane	0.00438578	0.000423328			
Ethylbenzene	0.00103012	5.55803E-06			
meta-Xylene	0.0133775	6.97041E-05			
n-Nonane	0.00059919	3.10724E-05			
C10+	4.73822E-09	4.05707E-12			
TEG	0.0016555	8.61504E-07			
Water	3.02177	0.00303074			

Copyright © 2002-2020 BRE Group, Ltd.
Licensed to Portnoy Environmental, Inc. and Affiliates

Process Streams Report
All Streams
Tabulated by Total Phase

Client Name:	COP	Job: Zia Hills Permit Basis
Location:		
Flowsheet:	20MM	

Molar Flow	12 lbmol/h	509 lbmol/h			
Methanol	0	0			

Mass Fraction	12 %	509 %			
H2S	0	0			
Nitrogen	0.00107406	0.251909			
Methane	0.501202	32.5608			
Carbon Dioxide	0.117459	0.714788			
Ethane	1.2827	22.736			
Propane	2.28942	20.4408			
i-Butane	0.595603	3.87453			
n-Butane	2.39653	10.2322			
i-Pentane	1.07577	2.77851			
n-Pentane	1.49215	3.19512			
i-Hexane	0.663141	0.850665			
n-Hexane	0.604728	0.600599			
2,2,4-Trimethylpentane	0.000491072	0.000292785			
Cyclohexane	0.955528	0.326052			
Benzene	0.969202	0.0566722			
i-Heptane	0.728454	0.561907			
n-Heptane	0.325968	0.184978			
Toluene	2.33423	0.0701488			
n-Octane	0.738021	0.237043			
Ethylbenzene	0.161108	0.00289252			
meta-Xylene	2.0922	0.0362756			
n-Nonane	0.113211	0.0195355			
C10+	1.79703E-06	5.1201E-09			
TEG	0.366244	0.000634196			
Water	80.1956	0.267648			
Methanol	0	0			

Mass Flow	12 lb/h	509 lb/h			
H2S	0	0			
Nitrogen	0.000729086	0.0513888			
Methane	0.340224	6.64233			
Carbon Dioxide	0.0797333	0.145815			
Ethane	0.870717	4.6381			
Propane	1.55409	4.16987			
i-Butane	0.404305	0.790396			
n-Butane	1.6268	2.08734			
i-Pentane	0.730252	0.56681			
n-Pentane	1.01289	0.651798			
i-Hexane	0.450151	0.173534			
n-Hexane	0.410499	0.122521			
2,2,4-Trimethylpentane	0.000333347	5.97274E-05			
Cyclohexane	0.648628	0.066514			
Benzene	0.65791	0.011561			
i-Heptane	0.494486	0.114628			
n-Heptane	0.221272	0.0377351			
Toluene	1.58451	0.0143102			
n-Octane	0.500981	0.0483562			
Ethylbenzene	0.109363	0.000590068			
meta-Xylene	1.42022	0.00740013			
n-Nonane	0.0768491	0.00398519			
C10+	1.21985E-06	1.04449E-09			
TEG	0.248612	0.000129375			
Water	54.438	0.0545996			
Methanol	0	0			

Copyright © 2002-2020 BRE Group, Ltd.
Licensed to Portnoy Environmental, Inc. and Affiliates

Process Streams Report
All Streams
Tabulated by Total Phase

Client Name:	COP	Job: Zia Hills Permit Basis
Location:		
Flowsheet:	20MM	

Stream Properties

Property	Units	12	509			
Temperature	°F	241.127	117.653			
Pressure	psig	1.69595	56.3959			
Mole Fraction Vapor	%	100	100			
Mole Fraction Light Liquid	%	0	0			
Mole Fraction Heavy Liquid	%	0	0			
Molecular Weight	lb/lbmol	20.9535	27.4183			
Mass Density	lb/ft^3	0.042086	0.315219			
Molar Flow	lbmol/h	3.23963	0.744021			
Mass Flow	lb/h	67.8816	20.3998			
Vapor Volumetric Flow	ft^3/h	1612.93	64.7163			
Liquid Volumetric Flow	gpm	201.092	8.06852			
Std Vapor Volumetric Flow	MMSCFD	0.0295053	0.00677626			
Std Liquid Volumetric Flow	sgpm	0.151907	0.1029			
Compressibility		0.992744	0.978484			
Specific Gravity		0.72347	0.946683			
API Gravity						
Enthalpy	Btu/h	-318318	-27938.3			
Mass Enthalpy	Btu/lb	-4689.32	-1369.54			
Mass Cp	Btu/(lb*°F)	0.459002	0.473309			
Ideal Gas CpCv Ratio		1.26217	1.18481			
Dynamic Viscosity	cP	0.013162	0.0106168			
Kinematic Viscosity	cSt	19.5237	2.10263			
Thermal Conductivity	Btu/(h*ft*°F)	0.0159473	0.0168891			
Surface Tension	lbf/ft					
Net Ideal Gas Heating Value	Btu/ft^3	205.196	1460.98			
Net Liquid Heating Value	Btu/lb	2835.25	20113.8			
Gross Ideal Gas Heating Value	Btu/ft^3	267.439	1600.7			
Gross Liquid Heating Value	Btu/lb	3962.54	22048.2			

Remarks

Copyright © 2002-2020 BRE Group, Ltd.
Licensed to Portnoy Environmental, Inc. and Affiliates

40MM
Plant Schematic

Client Name:	COP	Job: Zia Hills Permit Basis
Location:		
Flowsheet:	40MM	

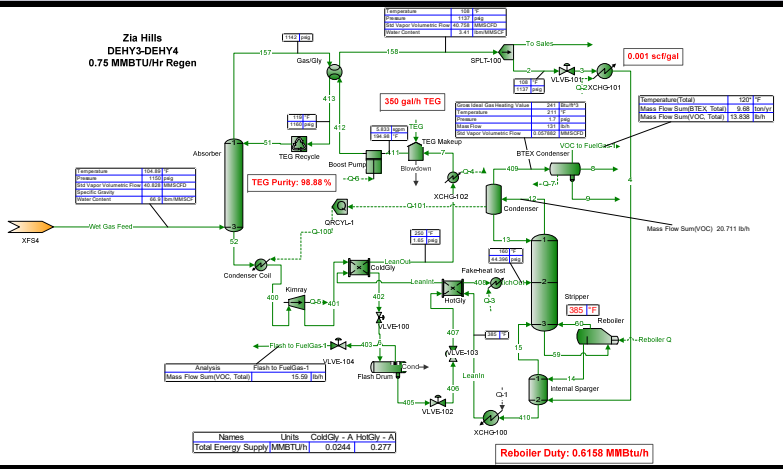

Names	Units	ColdGly - A	HotGly - A
Total Energy Supply	MMBTU/h	0.0244	0.277

* User Specified Values
? Extrapolated or Approximate Values

ProMax 5.0.20259.0
Copyright © 2002-2020 BRE Group, Ltd.

Licensed to Portnoy Environmental, Inc. and Affiliates

Process Streams Report
All Streams
Tabulated by Total Phase

Client Name:	COP	Job: Zia Hills Permit Basis
Location:		
Flowsheet:	40MM	

Connections

	Flash to FuelGas-1	VOC to FuelGas-1	Wet Gas Feed	12	403
From Block	VLVE-104	BTEX Condenser	XFS4	Stripper	Flash Drum
To Block	--	--	Absorber	Condenser	VLVE-104

Stream Composition

Mole Fraction	Flash to FuelGas-1 %	VOC to FuelGas-1 %	Wet Gas Feed %	12 %	403 %
H2S	0	0	0	0	0
Nitrogen	0.247825	0.0134976	1.14861	0.000721405	0.247825
Methane	55.7256	10.9264	75.8576	0.584396	55.7256
Carbon Dioxide	0.446186	0.926817	0.0924998	0.0498828	0.446186
Ethane	20.6956	14.7552	12.4942	0.791736	20.6956
Propane	12.6629	17.7148	6.09011	0.958174	12.6629
i-Butane	1.81986	3.43521	0.897487	0.188571	1.81986
n-Butane	4.81083	13.6637	1.96223	0.759562	4.81083
i-Pentane	1.05245	4.6895	0.43224	0.27375	1.05245
n-Pentane	1.20924	6.32055	0.484971	0.378186	1.20924
i-Hexane	0.269913	2.08883	0.119039	0.14086	0.269913
n-Hexane	0.190677	1.76679	0.083046	0.128204	0.190677
2,2,4-Trimethylpentane	7.0297E-05	0.000750636	3.79441E-05	7.84493E-05	7.0297E-05
Cyclohexane	0.10642	2.55115	0.0347627	0.20865	0.10642
Benzene	0.0199963	2.70919	0.00487954	0.229626	0.0199963
i-Heptane	0.153671	1.48429	0.0793935	0.132808	0.153671
n-Heptane	0.0506167	0.568267	0.0264143	0.0593314	0.0506167
Toluene	0.0210025	3.2916	0.00676282	0.468481	0.0210025
n-Octane	0.0569598	0.558699	0.0366352	0.11741	0.0569598
Ethylbenzene	0.000752193	0.0946966	0.000349828	0.0280868	0.000752193
meta-Xylene	0.00943264	1.12831	0.00437546	0.364569	0.00943264
n-Nonane	0.00418925	0.0341243	0.00365128	0.0160172	0.00418925
C10+	2.0627E-08	1.3769E-09	1.12035E-10	5.29776E-06	2.0627E-08
TEG	0.000114276	1.47061E-08	0	0.0472563	0.000114276
Water	0.445753	11.2776	0.140692	94.0736	0.445753
Methanol	0	0	0	0	0

Molar Flow	Flash to FuelGas-1 lbmol/h	VOC to FuelGas-1 lbmol/h	Wet Gas Feed lbmol/h	12 lbmol/h	403 lbmol/h
H2S	0	0	0	0	0
Nitrogen	0.00325229	4.62886E-05	51.4906	4.63058E-05	0.00325229
Methane	0.731304	0.037471	3400.6	0.0375114	0.731304
Carbon Dioxide	0.00585543	0.00317843	4.14664	0.0032019	0.00585543
Ethane	0.271595	0.0506014	560.098	0.0508203	0.271595
Propane	0.166179	0.0607512	273.011	0.0615037	0.166179
i-Butane	0.0238826	0.0117807	40.2332	0.012104	0.0238826
n-Butane	0.0631341	0.0468583	87.9643	0.0487551	0.0631341
i-Pentane	0.0138117	0.0160822	19.3768	0.0175716	0.0138117
n-Pentane	0.0158692	0.0216757	21.7406	0.0242752	0.0158692
i-Hexane	0.00354215	0.00716342	5.33635	0.00904156	0.00354215
n-Hexane	0.00250232	0.00605904	3.72284	0.00822919	0.00250232
2,2,4-Trimethylpentane	9.2253E-07	2.57423E-06	0.00170098	5.03554E-06	9.2253E-07
Cyclohexane	0.00139659	0.00874893	1.55836	0.0133929	0.00139659
Benzene	0.000262418	0.0092909	0.218743	0.0147394	0.000262418
i-Heptane	0.00201667	0.00509021	3.55911	0.00852477	0.00201667
n-Heptane	0.000664259	0.00194881	1.18412	0.00380839	0.000664259
Toluene	0.000275622	0.0112882	0.303168	0.030071	0.000275622
n-Octane	0.000747501	0.001916	1.64231	0.00753636	0.000747501
Ethylbenzene	9.87127E-06	0.000324752	0.0156823	0.00180285	9.87127E-06
meta-Xylene	0.000123787	0.00386942	0.196146	0.0234011	0.000123787

Copyright © 2002-2020 BRE Group, Ltd.
Licensed to Portnoy Environmental, Inc. and Affiliates

Process Streams Report
All Streams
Tabulated by Total Phase

Client Name:	COP	Job: Zia Hills Permit Basis
Location:		
Flowsheet:	40MM	

Molar Flow	Flash to FuelGas-1 lbmol/h	VOC to FuelGas-1 lbmol/h	Wet Gas Feed lbmol/h	12 lbmol/h	403 lbmol/h
n-Nonane	5.49768E-05	0.000117026	0.163682	0.00102812	5.49768E-05
C10+	2.70695E-10	4.72193E-12	5.0224E-09	3.40055E-07	2.70695E-10
TEG	1.49968E-06	5.0433E-11	0	0.00303331	1.49968E-06
Water	0.00584976	0.0386755	6.30705	6.03844	0.00584976
Methanol	0	0	0	0	0

Mass Fraction	Flash to FuelGas-1 %	VOC to FuelGas-1 %	Wet Gas Feed %	12 %	403 %
H2S	0	0	0	0	0
Nitrogen	0.253504	0.0077193	1.48316	0.00098106	0.253504
Methane	32.6436	3.57852	56.0944	0.455123	32.6436
Carbon Dioxide	0.717026	0.832715	0.187645	0.106573	0.717026
Ethane	22.7232	9.05774	17.3172	1.15571	22.7232
Propane	20.3892	15.9473	12.3785	2.05112	20.3892
i-Butane	3.86236	4.07616	2.40447	0.532067	3.86236
n-Butane	10.2102	16.2131	5.25705	2.14317	10.2102
i-Pentane	2.77271	6.90735	1.43749	0.958811	2.77271
n-Pentane	3.18577	9.30978	1.61285	1.3246	3.18577
i-Hexane	0.849336	3.67486	0.472848	0.589278	0.849336
n-Hexane	0.600005	3.10831	0.329876	0.536332	0.600005
2,2,4-Trimethylpentane	0.000293214	0.00175049	0.000199787	0.000435025	0.000293214
Cyclohexane	0.32704	4.38324	0.134855	0.852457	0.32704
Benzene	0.0570347	4.32029	0.0175689	0.870742	0.0570347
i-Heptane	0.562263	3.03633	0.3667	0.64603	0.562263
n-Heptane	0.185201	1.16248	0.122001	0.28861	0.185201
Toluene	0.0706617	6.19161	0.0287222	2.09548	0.0706617
n-Octane	0.237583	1.30289	0.192896	0.651074	0.237583
Ethylbenzene	0.00291597	0.205244	0.00171193	0.144755	0.00291597
meta-Xylene	0.0365668	2.44549	0.0214119	1.87893	0.0365668
n-Nonane	0.0196193	0.08935	0.0215858	0.0997271	0.0196193
C10+	1.9391E-07	7.23682E-09	1.32952E-09	6.62116E-05	1.9391E-07
TEG	0.000626642	4.50863E-08	0	0.34451	0.000626642
Water	0.29323	4.14777	0.116832	82.2734	0.29323
Methanol	0	0	0	0	0

Mass Flow	Flash to FuelGas-1 lb/h	VOC to FuelGas-1 lb/h	Wet Gas Feed lb/h	12 lb/h	403 lb/h
H2S	0	0	0	0	0
Nitrogen	0.0911077	0.0012967	1442.43	0.00129718	0.0911077
Methane	11.7319	0.601126	54554	0.601776	11.7319
Carbon Dioxide	0.257695	0.139881	182.492	0.140914	0.257695
Ethane	8.16659	1.52154	16841.6	1.52812	8.16659
Propane	7.32777	2.67886	12038.6	2.71204	7.32777
i-Butane	1.38811	0.68472	2338.44	0.703514	1.38811
n-Butane	3.66949	2.72351	5112.68	2.83375	3.66949
i-Pentane	0.996496	1.16031	1398.01	1.26777	0.996496
n-Pentane	1.14495	1.56387	1568.56	1.75142	1.14495
i-Hexane	0.305246	0.61731	459.862	0.779159	0.305246
n-Hexane	0.215638	0.52214	320.817	0.709153	0.215638
2,2,4-Trimethylpentane	0.000105379	0.000294051	0.194301	0.000575202	0.000105379
Cyclohexane	0.117536	0.736305	131.151	1.12714	0.117536
Benzene	0.0204979	0.72573	17.0865	1.15132	0.0204979
i-Heptane	0.202074	0.510049	356.629	0.854198	0.202074
n-Heptane	0.06656	0.195275	118.651	0.381608	0.06656
Toluene	0.0253954	1.04008	27.9334	2.7707	0.0253954
n-Octane	0.0853859	0.218862	187.598	0.860867	0.0853859
Ethylbenzene	0.00104798	0.0344773	1.66491	0.191399	0.00104798
meta-Xylene	0.0131419	0.410797	20.8239	2.48438	0.0131419

Copyright © 2002-2020 BRE Group, Ltd.
Licensed to Portnoy Environmental, Inc. and Affiliates

Process Streams Report
All Streams
Tabulated by Total Phase

Client Name:	COP	Job: Zia Hills Permit Basis
Location:		
Flowsheet:	40MM	

Mass Flow	Flash to FuelGas-1 lb/h	VOC to FuelGas-1 lb/h	Wet Gas Feed lb/h	12 lb/h	403 lb/h
n-Nonane	0.00705106	0.0150092	20.9931	0.131862	0.00705106
C10+	6.969E-08	1.21566E-09	1.29301E-06	8.75468E-05	6.969E-08
TEG	0.000225211	7.57368E-09	0	0.455521	0.000225211
Water	0.105385	0.69675	113.623	108.784	0.105385
Methanol	0	0	0	0	0

Stream Properties

Property	Units	Flash to FuelGas-1	VOC to FuelGas-1	Wet Gas Feed	12	403
Temperature	°F	116.916	120 *	104.894	239.989	117.943
Pressure	psig	45 *	1.69595	1150	1.69595	56.3959
Mole Fraction Vapor	%	100	100	99.9807	100	100
Mole Fraction Light Liquid	%	0	0	0.019314	0	0
Mole Fraction Heavy Liquid	%	0	0	0	0	0
Molecular Weight	lb/lbmol	27.3859	48.9829	21.6945	20.5992	27.3859
Mass Density	lb/ft^3	0.262759	0.119886	5.27625	0.0414445	0.314659
Molar Flow	lbmol/h	1.31233	0.34294	4482.87	6.41884	1.31233
Mass Flow	lb/h	35.9394	16.7982	97253.8	132.223	35.9394
Vapor Volumetric Flow	ft^3/h	136.777	140.119	18432.4	3190.36	114.217
Liquid Volumetric Flow	gpm	17.0527	17.4693	2298.06	397.759	14.24
Std Vapor Volumetric Flow	MMSCFD	0.0119522	0.00312337	40.8283	0.0584604	0.0119522
Std Liquid Volumetric Flow	sgpm	0.181346	0.0583568	549.96	0.292596	0.181346
Compressibility		0.981998	0.984934	0.789478	0.992674	0.978576
Specific Gravity		0.945565	1.69125		0.711235	0.945565
API Gravity						
Enthalpy	Btu/h	-49289.8	-17298.9	-1.57033E+08	-634125	-49289.8
Mass Enthalpy	Btu/lb	-1371.47	-1029.81	-1614.67	-4795.89	-1371.47
Mass Cp	Btu/(lb*°F)	0.47151	0.41031	0.699038	0.45894	0.47353
Ideal Gas CpCv Ratio		1.1852	1.11047	1.23235	1.26798	1.18495
Dynamic Viscosity	cP	0.0105907	0.00902183		0.0131465	0.0106259
Kinematic Viscosity	cSt	2.51621	4.69794		19.8027	2.10816
Thermal Conductivity	Btu/(h*ft*°F)	0.0168284	0.0115704		0.0159715	0.0169098
Surface Tension	lbf/ft					
Net Ideal Gas Heating Value	Btu/ft^3	1458.93	2383.39	1171.85	180.454	1458.93
Net Liquid Heating Value	Btu/lb	20109.2	18275.7	20431.2	2424.61	20109.2
Gross Ideal Gas Heating Value	Btu/ft^3	1598.51	2580.18	1290.73	241.251	1598.51
Gross Liquid Heating Value	Btu/lb	22043.9	19800.6	22511	3544.65	22043.9

Remarks

Copyright © 2002-2020 BRE Group, Ltd.
Licensed to Portnoy Environmental, Inc. and Affiliates

G3606

GAS COMPRESSION APPLICATION

GAS ENGINE SITE SPECIFIC TECHNICAL DATA
G3606A4-COP

CATERPILLAR®

ENGINE SPEED (rpm):	1000	RATING STRATEGY:	STANDARD
COMPRESSION RATIO:	7.6	RATING LEVEL:	CONTINUOUS
AFTERCOOLER TYPE:	SCAC	FUEL SYSTEM:	GAV
AFTERCOOLER - STAGE 2 INLET (°F):	130		WITH AIR FUEL RATIO CONTROL
AFTERCOOLER - STAGE 1 INLET (°F):	174	**SITE CONDITIONS:**	
JACKET WATER OUTLET (°F):	190	FUEL:	Gas Analysis
ASPIRATION:	TA	FUEL PRESSURE RANGE(psig): (See note 1)	58.0-70.3
COOLING SYSTEM:	JW+1AC, OC+2AC	FUEL METHANE NUMBER:	59.2
CONTROL SYSTEM:	ADEM4	FUEL LHV (Btu/scf):	1115
EXHAUST MANIFOLD:	DRY	ALTITUDE(ft):	3000
COMBUSTION:	LOW EMISSION	INLET AIR TEMPERATURE(°F):	105
NOx EMISSION LEVEL (g/bhp-hr NOx):	0.3	STANDARD RATED POWER:	1875 bhp@1000rpm
SET POINT TIMING:	17		

				MAXIMUM RATING	SITE RATING AT MAXIMUM INLET AIR TEMPERATURE		
RATING		**NOTES**	**LOAD**	**100%**	**100%**	**75%**	**50%**
ENGINE POWER	(WITHOUT FAN)	(2)	bhp	1875	1875	1406	938
INLET AIR TEMPERATURE			°F	105	105	105	105
ENGINE DATA							
FUEL CONSUMPTION (LHV)		(3)	Btu/bhp-hr	6916	6916	7196	7773
FUEL CONSUMPTION (HHV)		(3)	Btu/bhp-hr	7629	7629	7938	8575
AIR FLOW (@inlet air temp, 14.7 psia)	(WET)	(4)(5)	ft3/min	5020	5020	3813	2618
AIR FLOW	(WET)	(4)(5)	lb/hr	21153	21153	16071	11034
FUEL FLOW (60ºF, 14.7 psia)			scfm	194	194	151	109
INLET MANIFOLD PRESSURE		(6)	in Hg(abs)	103.1	103.1	79.5	56.6
EXHAUST TEMPERATURE - ENGINE OUTLET		(7)	°F	809	809	879	956
EXHAUST GAS FLOW (@engine outlet temp, 14.5 psia)	(WET)	(8)(5)	ft3/min	11988	11988	9621	7001
EXHAUST GAS MASS FLOW	(WET)	(8)(5)	lb/hr	21775	21775	16556	11383
EMISSIONS DATA - ENGINE OUT							
NOx (as NO2)		(9)(10)	g/bhp-hr	0.30	0.30	0.30	0.30
CO		(9)(10)	g/bhp-hr	2.74	2.74	2.74	2.74
THC (mol. wt. of 15.84)		(9)(10)	g/bhp-hr	4.66	4.66	4.81	5.11
NMHC (mol. wt. of 15.84)		(9)(10)	g/bhp-hr	1.75	1.75	1.80	1.91
NMNEHC (VOCs) (mol. wt. of 15.84)		(9)(10)(11)	g/bhp-hr	0.94	0.94	0.97	1.03
HCHO (Formaldehyde)		(9)(10)	g/bhp-hr	0.19	0.19	0.20	0.22
CO2		(9)(10)	g/bhp-hr	455	455	471	511
EXHAUST OXYGEN		(9)(12)	% DRY	11.3	11.3	11.1	10.7
HEAT REJECTION							
HEAT REJ. TO JACKET WATER (JW)		(13)	Btu/min	23557	23557	18900	15630
HEAT REJ. TO ATMOSPHERE		(13)	Btu/min	5781	5781	5677	5483
HEAT REJ. TO LUBE OIL (OC)		(13)	Btu/min	11673	11673	10795	9354
HEAT REJ. TO A/C - STAGE 1 (1AC)		(13)(14)	Btu/min	19020	19020	9866	3118
HEAT REJ. TO A/C - STAGE 2 (2AC)		(13)(14)	Btu/min	8202	8202	5034	2461

COOLING SYSTEM SIZING CRITERIA			
TOTAL JACKET WATER CIRCUIT (JW+1AC)	(14)(15)	Btu/min	45884
TOTAL STAGE 2 AFTERCOOLER CIRCUIT (OC+2AC)	(14)(15)	Btu/min	22620
A cooling system safety factor of 0% has been added to the cooling system sizing criteria.			

CONDITIONS AND DEFINITIONS

Engine rating obtained and presented in accordance with ISO 3046/1, adjusted for fuel, site altitude and site inlet air temperature. 100% rating at maximum inlet air temperature is the maximum engine capability for the specified fuel at site altitude and maximum site inlet air temperature. Maximum rating is the maximum capability at the specified aftercooler inlet temperature for the specified fuel at site altitude and reduced inlet air temperature. Lowest load point is the lowest continuous duty operating load allowed. No overload permitted at rating shown.

For notes information consult page three.

Engine Power vs. Inlet Air Temperature

Data represents temperature sweep at 3000 ft and 1000 rpm

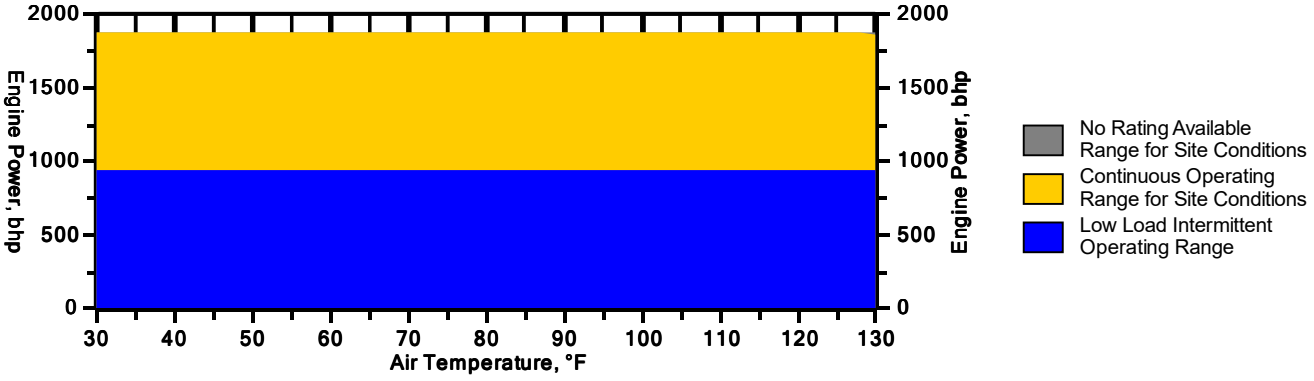

Engine Power vs. Engine Speed

Data represents speed sweep at 3000 ft and 105 ºF

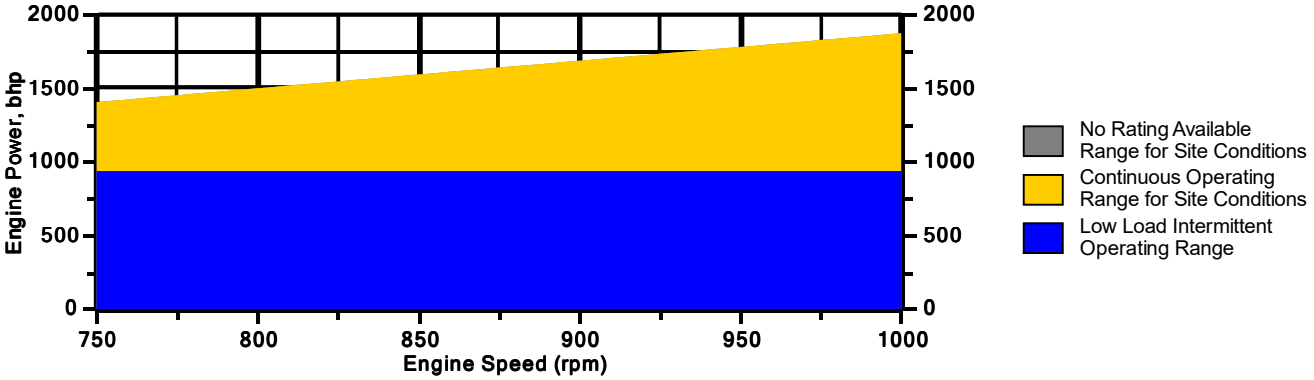

Engine Torque vs. Engine Speed

Data represents speed sweep at 3000 ft and 105 ºF

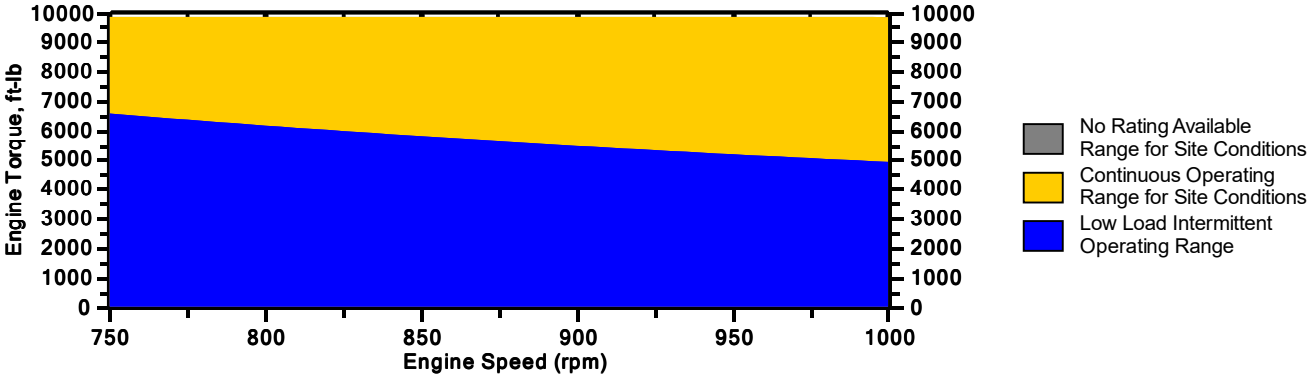

Note: At site conditions of 3000 ft and 105°F inlet air temp., constant torque can be maintained down to 750 rpm. The minimum speed for loading at these conditions is 750 rpm.

NOTES

1. Fuel pressure range specified is to the engine gas shutoff valve (GSOV). Additional fuel train components should be considered in pressure and flow calculations.

2. Engine rating is with two engine driven water pumps. Tolerance is ± 3% of full load.

3. Fuel consumption tolerance is ± 2.5% of full load data.

4. Air flow value is on a 'wet' basis. Flow is a nominal value with a tolerance of ± 5 %.

5. Inlet and Exhaust Restrictions must not exceed A&I limits based on full load flow rates from the standard technical data sheet.

6. Inlet manifold pressure is a nominal value with a tolerance of ± 5 %.

7. Exhaust temperature is a nominal value with a tolerance of (+)63°F, (-)54°F.

8. Exhaust flow value is on a "wet" basis. Flow is a nominal value with a tolerance of ± 6 %.

9. Emissions data is at engine exhaust flange prior to any after treatment.

10. Values listed are higher than nominal levels to allow for instrumentation, measurement, and engine-to-engine variations. They indicate the maximum values expected under steady state conditions. Fuel methane number cannot vary more than ± 3. THC, NMHC, and NMNEHC do not include aldehydes. An oxidation catalyst may be required to meet Federal, State or local CO or HC requirements.

11. VOCs - Volatile organic compounds as defined in US EPA 40 CFR 60, subpart JJJJ

12. Exhaust Oxygen level is the result of adjusting the engine to operate at the specified NOx level. Tolerance is ± 0.5.

13. Heat rejection values are nominal. Tolerances, based on treated water, are ± 10% for jacket water circuit, ± 50% for radiation, ± 20% for lube oil circuit, and ± 5% for aftercooler circuit.

14. Aftercooler heat rejection includes an aftercooler heat rejection factor for the site elevation and inlet air temperature specified. Aftercooler heat rejection values at part load are for reference only. Do not use part load data for heat exchanger sizing.

15. Cooling system sizing criteria are maximum circuit heat rejection for the site, with applied tolerances.

Constituent	Abbrev	Mole %	Norm
Water Vapor	H2O	0.2100	0.2101
Methane	CH4	80.5700	80.5942
Ethane	C2H6	11.1400	11.1433
Propane	C3H8	4.4300	4.4313
Isobutane	iso-C4H1O	1.8100	1.8105
Norbutane	nor-C4H1O	0.0000	0.0000
Isopentane	iso-C5H12	0.6000	0.6002
Norpentane	nor-C5H12	0.0000	0.0000
Hexane	C6H14	0.2200	0.2201
Heptane	C7H16	0.0900	0.0900
Nitrogen	N2	0.6700	0.6702
Carbon Dioxide	CO2	0.1600	0.1600
Hydrogen Sulfide	H2S	0.0000	0.0000
Carbon Monoxide	CO	0.0000	0.0000
Hydrogen	H2	0.0000	0.0000
Oxygen	O2	0.0000	0.0000
Helium	HE	0.0000	0.0000
Neopentane	neo-C5H12	0.0000	0.0000
Octane	C8H18	0.0500	0.0500
Nonane	C9H20	0.0200	0.0200
Ethylene	C2H4	0.0000	0.0000
Propylene	C3H6	0.0000	0.0000
TOTAL (Volume %)		99.9700	99.9999

Fuel Makeup:	Gas Analysis
Unit of Measure:	English

Calculated Fuel Properties

Caterpillar Methane Number:	59.2
Lower Heating Value (Btu/scf):	1115
Higher Heating Value (Btu/scf):	1230
WOBBE Index (Btu/scf):	1329
THC: Free Inert Ratio:	119.2
Total % Inerts (% N2, CO2, He):	0.83%
RPC (%) (To 905 Btu/scf Fuel):	100%
Compressibility Factor:	0.997
Stoich A/F Ratio (Vol/Vol):	11.57
Stoich A/F Ratio (Mass/Mass):	16.45
Specific Gravity (Relative to Air):	0.704
Fuel Specific Heat Ratio (K):	1.286

CONDITIONS AND DEFINITIONS

Caterpillar Methane Number represents the knock resistance of a gaseous fuel. It should be used with the Caterpillar Fuel Usage Guide for the engine and rating to determine the rating for the fuel specified. A Fuel Usage Guide for each rating is included on page 2 of its standard technical data sheet.

RPC always applies to naturally aspirated (NA) engines, and turbocharged (TA or LE) engines only when they are derated for altitude and ambient site conditions.

Project specific technical data sheets generated by the Caterpillar Gas Engine Rating Pro program take the Caterpillar Methane Number and RPC into account when generating a site rating.

Fuel properties for Btu/scf calculations are at 60F and 14.696 psia.

Caterpillar shall have no liability in law or equity, for damages, consequently or otherwise, arising from use of program and related material or any part thereof.

FUEL LIQUIDS

Field gases, well head gases, and associated gases typically contain liquid water and heavy hydrocarbons entrained in the gas. To prevent detonation and severe damage to the engine, hydrocarbon liquids must not be allowed to enter the engine fuel system. To remove liquids, a liquid separator and coalescing filter are recommended, with an automatic drain and collection tank to prevent contamination of the ground in accordance with local codes and standards.

To avoid water condensation in the engine or fuel lines, limit the relative humidity of water in the fuel to 80% at the minimum fuel operating temperature.

To:

RE: NSPS Subpart JJJJ Applicability Summary

Date:

Service Order Number:	
Service Site Name:	
CSI/Compressco Unit Number:	811355
Engine Make & Model:	Caterpillar G3606A4
Engine Serial Number:	JFE01170
Engine Type:	4SLB
Engine Category:	New
OEM Rated Engine Horsepower:	1875 HP
Engine Manufacture Date:	10/01/2018
"New" Engine Subject to NSPS JJJJ?	Yes – 1.0 g/NOx, 2.0 g/CO, 0.7 g/VOC
Engine Displacement:	127.21 Liters
Engine RPM:	1,000
Fuel Type:	Natural Gas
Control Equipment:	ADEM IV / Catalytic Converter
Compressor Make & Model:	Ariel KBK/4
Number of Stages:	3
Compressor OEM Rated HP:	3680 HP
Compressor Rated Speed:	1,2000
Compressor Serial Number:	F-58275
Compressor Type:	Reciprocating
Compressor Manufacture Date:	11/01/2018
Compressor NSPS Quad O Status:	
Engine Certification:	None

Reconstruction Status: Since the date of manufacture noted above, this engine has not been modified per 40 CFR 60.14, or reconstructed per 40 CFR 60.15.

Please contact Brad Johnson with any questions regarding this information at 432-495-3242 or **brad.johnson@compressor-systems.com**.

NOTE: UNIT SPECIFICATIONS AND NUMBERS LISTED IN THIS DATA SHEET ARE USED FOR REFERENCE PURPOSES ONLY IN ORDER TO OBTAIN ANY PERMITS REQUIRED FOR PROVISION OF THE COMPRESSION SERVICES AT THE SERVICE SITE. NOTWITHSTANDING THE FOREGOING, THE LISTING OF THE UNIT SPECIFICATIONS AND NUMBERS ON THIS DATA SHEET SHALL NOT BE CONSTRUED AS LIMITING IN ANY WAY CONTRACTOR'S CONTRACTUAL RIGHT TO FREELY SUBSTITUTE THE UNIT BEING USED TO PROVIDE COMPRESSION AND RELATED PRODUCTION ENHANCEMENT SERVICES UNDER THE MASTER AGREEMENT AND THE APPLICABLE SERVICE ORDER AT ANY TIME, IN ITS SOLE DISCRETION, AND WITHOUT NOTICE, SO LONG AS SUCH SUBSTITUTION DOES NOT UNREASONABLY INTERFERE WITH THE PROVISION OF SUCH SERVICES OR CUSTOMER'S OPERATIONS AT THE SITE. UPON ANY SUBSTITUTION OR REPLACEMENT OF ANY UNIT USED FOR THE PROVISION OF THE COMPRESSION SERVICES, CONTRACTOR SHALL PROVIDE CUSTOMER WITH A NEW DATA SHEET REFLECTING THE APPLICABLE UNIT SPECIFICATIONS AND NUMBERS.

To:

RE: NSPS Subpart JJJJ Applicability Summary

Date:

Service Order Number:	
Service Site Name:	Zia Hills
CSI/Compressco Unit Number:	412951
Engine Make & Model:	Caterpillar G3606A4
Engine Serial Number:	JFE01205
Engine Type:	4SLB
Engine Category:	New
OEM Rated Engine Horsepower:	1875 HP
Engine Manufacture Date:	11/01/2018
"New" Engine Subject to NSPS JJJJ?	Yes – 1.0 g/NOx, 2.0 g/CO, 0.7 g/VOC
Engine Displacement:	127.2 Liters
Engine RPM:	1,000
Fuel Type:	Natural Gas
Control Equipment:	ADEM IV / Catalytic Converter
Compressor Make & Model:	KBK/4
Number of Stages:	3
Compressor OEM Rated HP:	3680 HP
Compressor Rated Speed:	1,200
Compressor Serial Number:	F-58107
Compressor Type:	Reciprocating
Compressor Manufacture Date:	11/01/2018
Compressor NSPS Quad O Status:	
Engine Certification:	None

Reconstruction Status: Since the date of manufacture noted above, this engine has not been modified per 40 CFR 60.14, or reconstructed per 40 CFR 60.15.

Please contact Brad Johnson with any questions regarding this information at 432-495-3242 or **brad.johnson@compressor-systems.com**.

NOTE: UNIT SPECIFICATIONS AND NUMBERS LISTED IN THIS DATA SHEET ARE USED FOR REFERENCE PURPOSES ONLY IN ORDER TO OBTAIN ANY PERMITS REQUIRED FOR PROVISION OF THE COMPRESSION SERVICES AT THE SERVICE SITE. NOTWITHSTANDING THE FOREGOING, THE LISTING OF THE UNIT SPECIFICATIONS AND NUMBERS ON THIS DATA SHEET SHALL NOT BE CONSTRUED AS LIMITING IN ANY WAY CONTRACTOR'S CONTRACTUAL RIGHT TO FREELY SUBSTITUTE THE UNIT BEING USED TO PROVIDE COMPRESSION AND RELATED PRODUCTION ENHANCEMENT SERVICES UNDER THE MASTER AGREEMENT AND THE APPLICABLE SERVICE ORDER AT ANY TIME, IN ITS SOLE DISCRETION, AND WITHOUT NOTICE, SO LONG AS SUCH SUBSTITUTION DOES NOT UNREASONABLY INTERFERE WITH THE PROVISION OF SUCH SERVICES OR CUSTOMER'S OPERATIONS AT THE SITE. UPON ANY SUBSTITUTION OR REPLACEMENT OF ANY UNIT USED FOR THE PROVISION OF THE COMPRESSION SERVICES, CONTRACTOR SHALL PROVIDE CUSTOMER WITH A NEW DATA SHEET REFLECTING THE APPLICABLE UNIT SPECIFICATIONS AND NUMBERS.

To:

RE: NSPS Subpart JJJJ Applicability Summary

Date:

Service Order Number:	
Service Site Name:	Zia Hills Central
CSI/Compressco Unit Number:	811356
Engine Make & Model:	Caterpillar G3606A4
Engine Serial Number:	JFE01188
Engine Type:	4SLB
Engine Category:	New
OEM Rated Engine Horsepower:	1875 HP
Engine Manufacture Date:	11/01/2018
"New" Engine Subject to NSPS JJJJ?	Yes – 1.0 g/NOx, 2.0 g/CO, 0.7 g/VOC
Engine Displacement:	127.2 Liters
Engine RPM:	1,000
Fuel Type:	Natural Gas
Control Equipment:	ADEM IV / Catalytic Converter
Compressor Make & Model:	Ariel KBK/4
Number of Stages:	3
Compressor OEM Rated HP:	3680 HP
Compressor Rated Speed:	1,200
Compressor Serial Number:	F-58379
Compressor Type:	Reciprocating
Compressor Manufacture Date:	12/01/2018
Compressor NSPS Quad O Status:	
Engine Certification:	None

Reconstruction Status: Since the date of manufacture noted above, this engine has not been modified per 40 CFR 60.14, or reconstructed per 40 CFR 60.15.

Please contact Brad Johnson with any questions regarding this information at 432-495-3242 or **brad.johnson@compressor-systems.com**.

NOTE: UNIT SPECIFICATIONS AND NUMBERS LISTED IN THIS DATA SHEET ARE USED FOR REFERENCE PURPOSES ONLY IN ORDER TO OBTAIN ANY PERMITS REQUIRED FOR PROVISION OF THE COMPRESSION SERVICES AT THE SERVICE SITE. NOTWITHSTANDING THE FOREGOING, THE LISTING OF THE UNIT SPECIFICATIONS AND NUMBERS ON THIS DATA SHEET SHALL NOT BE CONSTRUED AS LIMITING IN ANY WAY CONTRACTOR'S CONTRACTUAL RIGHT TO FREELY SUBSTITUTE THE UNIT BEING USED TO PROVIDE COMPRESSION AND RELATED PRODUCTION ENHANCEMENT SERVICES UNDER THE MASTER AGREEMENT AND THE APPLICABLE SERVICE ORDER AT ANY TIME, IN ITS SOLE DISCRETION, AND WITHOUT NOTICE, SO LONG AS SUCH SUBSTITUTION DOES NOT UNREASONABLY INTERFERE WITH THE PROVISION OF SUCH SERVICES OR CUSTOMER'S OPERATIONS AT THE SITE. UPON ANY SUBSTITUTION OR REPLACEMENT OF ANY UNIT USED FOR THE PROVISION OF THE COMPRESSION SERVICES, CONTRACTOR SHALL PROVIDE CUSTOMER WITH A NEW DATA SHEET REFLECTING THE APPLICABLE UNIT SPECIFICATIONS AND NUMBERS.

To:

RE: NSPS Subpart JJJJ Applicability Summary

Date:

Service Order Number:	
Service Site Name:	Zia Hills Central
CSI/Compressco Unit Number:	811357
Engine Make & Model:	Caterpillar G3606A4
Engine Serial Number:	JFE01204
Engine Type:	4SLB
Engine Category:	New
OEM Rated Engine Horsepower:	1875 HP
Engine Manufacture Date:	12/01/2018
"New" Engine Subject to NSPS JJJJ?	Yes – 1.0 g/NOx, 2.0 g/CO, 0.7 g/VOC
Engine Displacement:	127.2 Liters
Engine RPM:	1,000
Fuel Type:	Natural Gas
Control Equipment:	ADEM IV / Catalytic Converter
Compressor Make & Model:	Ariel KBK/4
Number of Stages:	3
Compressor OEM Rated HP:	3680 HP
Compressor Rated Speed:	1,200
Compressor Serial Number:	F-58535
Compressor Type:	Reciprocating
Compressor Manufacture Date:	01/02/2019
Compressor NSPS Quad O Status:	
Engine Certification:	None

Reconstruction Status: Since the date of manufacture noted above, this engine has not been modified per 40 CFR 60.14, or reconstructed per 40 CFR 60.15.

Please contact Brad Johnson with any questions regarding this information at 432-495-3242 or **brad.johnson@compressor-systems.com**.

NOTE: UNIT SPECIFICATIONS AND NUMBERS LISTED IN THIS DATA SHEET ARE USED FOR REFERENCE PURPOSES ONLY IN ORDER TO OBTAIN ANY PERMITS REQUIRED FOR PROVISION OF THE COMPRESSION SERVICES AT THE SERVICE SITE. NOTWITHSTANDING THE FOREGOING, THE LISTING OF THE UNIT SPECIFICATIONS AND NUMBERS ON THIS DATA SHEET SHALL NOT BE CONSTRUED AS LIMITING IN ANY WAY CONTRACTOR'S CONTRACTUAL RIGHT TO FREELY SUBSTITUTE THE UNIT BEING USED TO PROVIDE COMPRESSION AND RELATED PRODUCTION ENHANCEMENT SERVICES UNDER THE MASTER AGREEMENT AND THE APPLICABLE SERVICE ORDER AT ANY TIME, IN ITS SOLE DISCRETION, AND WITHOUT NOTICE, SO LONG AS SUCH SUBSTITUTION DOES NOT UNREASONABLY INTERFERE WITH THE PROVISION OF SUCH SERVICES OR CUSTOMER'S OPERATIONS AT THE SITE. UPON ANY SUBSTITUTION OR REPLACEMENT OF ANY UNIT USED FOR THE PROVISION OF THE COMPRESSION SERVICES, CONTRACTOR SHALL PROVIDE CUSTOMER WITH A NEW DATA SHEET REFLECTING THE APPLICABLE UNIT SPECIFICATIONS AND NUMBERS.

To:

RE: NSPS Subpart JJJJ Applicability Summary

Date:

Service Order Number:	
Service Site Name:	Zia Hills CF 905
CSI/Compressco Unit Number:	413049
Engine Make & Model:	Caterpillar G3606A4
Engine Serial Number:	JFE01745
Engine Type:	4SLB
Engine Category:	New
OEM Rated Engine Horsepower:	1875 HP
Engine Manufacture Date:	03/01/2020
"New" Engine Subject to NSPS JJJJ?	Yes – 1.0 g/NOx, 2.0 g/CO, 0.7 g/VOC
Engine Displacement:	127.2 liters
Engine RPM:	1,000
Fuel Type:	Natural Gas
Control Equipment:	ADEM IV / Catalytic Converter
Compressor Make & Model:	Ariel KBK/4-3
Number of Stages:	3
Compressor OEM Rated HP:	3680 HP
Compressor Rated Speed:	1,200
Compressor Serial Number:	F-62359
Compressor Type:	Reciprocating
Compressor Manufacture Date:	02/01/2020
Compressor NSPS Quad O Status:	
Engine Certification:	None

Reconstruction Status: Since the date of manufacture noted above, this engine has not been modified per 40 CFR 60.14, or reconstructed per 40 CFR 60.15.

Please contact Brad Johnson with any questions regarding this information at 432-495-3242 or **brad.johnson@compressor-systems.com**.

NOTE: UNIT SPECIFICATIONS AND NUMBERS LISTED IN THIS DATA SHEET ARE USED FOR REFERENCE PURPOSES ONLY IN ORDER TO OBTAIN ANY PERMITS REQUIRED FOR PROVISION OF THE COMPRESSION SERVICES AT THE SERVICE SITE. NOTWITHSTANDING THE FOREGOING, THE LISTING OF THE UNIT SPECIFICATIONS AND NUMBERS ON THIS DATA SHEET SHALL NOT BE CONSTRUED AS LIMITING IN ANY WAY CONTRACTOR'S CONTRACTUAL RIGHT TO FREELY SUBSTITUTE THE UNIT BEING USED TO PROVIDE COMPRESSION AND RELATED PRODUCTION ENHANCEMENT SERVICES UNDER THE MASTER AGREEMENT AND THE APPLICABLE SERVICE ORDER AT ANY TIME, IN ITS SOLE DISCRETION, AND WITHOUT NOTICE, SO LONG AS SUCH SUBSTITUTION DOES NOT UNREASONABLY INTERFERE WITH THE PROVISION OF SUCH SERVICES OR CUSTOMER'S OPERATIONS AT THE SITE. UPON ANY SUBSTITUTION OR REPLACEMENT OF ANY UNIT USED FOR THE PROVISION OF THE COMPRESSION SERVICES, CONTRACTOR SHALL PROVIDE CUSTOMER WITH A NEW DATA SHEET REFLECTING THE APPLICABLE UNIT SPECIFICATIONS AND NUMBERS.

To:

RE: NSPS Subpart JJJJ Applicability Summary

Date:

Service Order Number:	
Service Site Name:	Zia Hills CF 902
CSI/Compressco Unit Number:	413029
Engine Make & Model:	Caterpillar G3606A4
Engine Serial Number:	JFE01728
Engine Type:	4SLB
Engine Category:	New
OEM Rated Engine Horsepower:	1875 HP
Engine Manufacture Date:	12/01/2019
"New" Engine Subject to NSPS JJJJ?	Yes – 1.0 g/NOx, 2.0 g/CO, 0.7 g/VOC
Engine Displacement:	127.2 liters
Engine RPM:	1,000
Fuel Type:	Natural Gas
Control Equipment:	ADEM IV / Catalytic Converter
Compressor Make & Model:	Ariel KBK/4
Number of Stages:	3
Compressor OEM Rated HP:	3680 HP
Compressor Rated Speed:	1,200
Compressor Serial Number:	F-61946
Compressor Type:	Reciprocating
Compressor Manufacture Date:	11/01/2019
Compressor NSPS Quad O Status:	
Engine Certification:	None

Reconstruction Status: Since the date of manufacture noted above, this engine has not been modified per 40 CFR 60.14, or reconstructed per 40 CFR 60.15.

Please contact Brad Johnson with any questions regarding this information at 432-495-3242 or **brad.johnson@compressor-systems.com**.

NOTE: UNIT SPECIFICATIONS AND NUMBERS LISTED IN THIS DATA SHEET ARE USED FOR REFERENCE PURPOSES ONLY IN ORDER TO OBTAIN ANY PERMITS REQUIRED FOR PROVISION OF THE COMPRESSION SERVICES AT THE SERVICE SITE. NOTWITHSTANDING THE FOREGOING, THE LISTING OF THE UNIT SPECIFICATIONS AND NUMBERS ON THIS DATA SHEET SHALL NOT BE CONSTRUED AS LIMITING IN ANY WAY CONTRACTOR'S CONTRACTUAL RIGHT TO FREELY SUBSTITUTE THE UNIT BEING USED TO PROVIDE COMPRESSION AND RELATED PRODUCTION ENHANCEMENT SERVICES UNDER THE MASTER AGREEMENT AND THE APPLICABLE SERVICE ORDER AT ANY TIME, IN ITS SOLE DISCRETION, AND WITHOUT NOTICE, SO LONG AS SUCH SUBSTITUTION DOES NOT UNREASONABLY INTERFERE WITH THE PROVISION OF SUCH SERVICES OR CUSTOMER'S OPERATIONS AT THE SITE. UPON ANY SUBSTITUTION OR REPLACEMENT OF ANY UNIT USED FOR THE PROVISION OF THE COMPRESSION SERVICES, CONTRACTOR SHALL PROVIDE CUSTOMER WITH A NEW DATA SHEET REFLECTING THE APPLICABLE UNIT SPECIFICATIONS AND NUMBERS.

ICE CATALYST SIZING PROGRAM

rev 2.0.44

Report Date: 6/16/2022

Customer	CSI COMPRESSCO	Housing	MCCOF2-4-2018C3-5435
Sales Person		Element	ERZ-1536-3-400
Project	ZIA HILLS CENTRAL FAC.	Contact	BRAD JOHNSON
Engine Name	Caterpillar G3606A4 - 1875bhp - 1000RPM		

Engine Power	1875.0	BHP	ACFM	11988.0	CU. FT/MIN	Exhaust O2	11.3	%
Exhaust Mass Flow	21775.0	LBS/HR	ACFH	719280	CU. FT/HR	Exhaust CO2	6.4	%
Process Temperature	809.0	F	SCFM	4920.1	CU. FT/MIN	Exhaust H2O	11.6	%
Exhaust Pressure	14.5	PSI	SCFH	295207	CU. FT/HR	Exhaust N2	70.7	%
Exhaust Density	0.0303	LBS/FT^3	Std Temp	68.0	F	Max Pressure Drop	12.0	in wc
Molecular Weight	28.43	AMU	Std Pressure	14.6959	PSI	Propane in Fuel	4.43	%

ACS Part Name	R14.875X35.875X3.500-400				
OEM Part Name	ERZ-1536-3-400				
Type	NG/Diesel (Lean)	Layers	1		
Geometry	Rectangular	Modules/Layer	2	Cell Count	400cpsi
X	14.875in	Guard Bed	No	Depth	3.500in
Y	35.875in				

Open Area	6.721	ft^2	Part Volume	0.980	ft^3	Part Weight	70	lbs
Linear Velocity	1784	ft/min	Total Volume	1.960	ft^3	Total Weight	139	lbs
Pressure Drop	3.1	in wc	Space Velocity	150600	GHSV			

Inlet Emissions

	g/bhp-hr	lb/hr	tons/year	ppmv	ppmvd	ppmvd%O2
NOx	0.30	1.24	5.44	35.18	39.80	28.93
CO	2.74	11.33	49.64	527.81	597.07	433.98
VOC	0.94	3.89	17.03	115.01	130.10	94.56
H2CO	0.19	0.79	3.44	34.14	38.62	28.07

Target Emissions

	min %DRE	g/bhp-hr	lb/hr	tons/year	ppmv	ppmvd	ppmvd%O2
NOx	0.00	<0.30	<1.24	<5.44	<35.18	<39.80	<28.93
CO	78.10	<0.60	<2.48	<10.87	<115.58	<130.75	<95.03
VOC	25.53	<0.70	<2.89	<12.68	<85.64	<96.88	<70.42
H2CO	78.95	<0.04	<0.17	<0.72	<7.19	<8.13	<5.91

Emissions with Catalyst

	%DRE	g/bhp-hr	lb/hr	tons/year	ppmv	ppmvd	ppmvd%O2
NOx	0.00	<0.30	<1.24	<5.44	<35.18	<39.80	<28.93
CO	78.10	<0.60	<2.48	<10.87	<115.58	<130.75	<95.03
VOC	25.53	<0.70	<2.89	<12.68	<85.64	<96.88	<70.42
H2CO	78.95	<0.04	<0.17	<0.72	<7.19	<8.13	<5.91

Safety Value: 2 VOC Molecular Weight: 44.1 O2 Reference Value: 15

Caleb Hurd
caleb_hurd@zeeco.com
918.893.8266
Applications Engineering Manager

Mike Clinton
michael_clinton@zeeco.com
832.205.5144
Regional Sales Manager

Combustion Rentals & Rapid Response Group

REFERENCE: ConocoPhillips | HP & LP Elevated Flares **QUOTE #:** 2020-04173RA-01 - Rev 1
DELIVER TO: Jad Azzam | 832.486.2421 | Jad.A.Azzam@conocophillips.com

HP Flare

Design Information (Estimated):

Source	HP #1	HP #2	HP #3
Gas MW	20.5	20.5	27.0
Gas LHV (Btu/Scf)	1121	1121	1436
Max Flow Rate (MMScfd)	30	15	24
Available Pressure (psig)	35	35	35
Temperature (°F)	7	7	40

Scope of Supply:

Qty	Equipment
1	Skid Mounted, Guy-Supported Flare Stack - Corrosion Allowance = 1/16”
1	Multi-Jet Flare Tip (MJ) - Maximum Exit Velocity = Mach 1.0
1	Assist Injection Ring
2	HSLF Pilot w/ Type K Thermocouple - Duplex Thermocouple - Individual Fuel Gas Supply Lines - 100’ High Temperature HEI/TC Whip
2	Retractable Pilot Components
1	Automatic Ignition/Monitoring Panel (Z-Purge) - Junction Box and LCP to be 316SS MOC, Nema 4X

Required Utilities:

Consumer	Utility Type	Consumption	Supply
Pilot Gas	Fuel Gas	130 Scfh	15 psig
Purge Gas*	Fuel Gas	100 Scfh	15 psig
Assist Gas	Fuel Gas	160 Scfm (Max)	15 psig
Control Panel	Electricity	10 A	120 VAC / 1 Ph / 60 Hz

*Purge gas to be oxygen free and not go to dew point at operating temperatures.

Customer Connections (Estimated, TBC by customer):

Service	Size	Type	Rating
Flare Gas	10"	RF	150#
Pilot Gas	1/2"	NPT	3000#
Assist Gas	1"	NPT	3000#

Equipment Description:

Skid Mounted, Guy-Supported Flare Stack	The stack is mounted onto a carbon steel skid that eliminates the need for a concrete foundation. The skid only needs to be set on firm, flat soil and then connected to the provided guy wires, screw anchors and tackle. The skid mounting will help minimize field installation and foundation costs.
Multi-Jet Flare Tip (MJ)	The flare tip uses multi-jet technology to break up the exiting gas to allow for more fuel and air interaction to increase smokeless flaring. Components located in the high heat zone will be made of 310SS or equivalent casting material. The tip will provide a VOC destruction efficiency of at least 98 wt%.
Assist Injection Ring	For low pressure applications and/or heavy gas compositions, an assist ring is provided for smokeless operation. The assist gas injection system utilizes compressed air or natural gas (@ 15 psig) to increase air and gas mixing in the combustion zone, which eliminates any smoke that may form in the flames. Simply opening a manual valve located at the base of the flare to the point where the smoke goes away is the only requirement.
HSLF Pilot w/ Type K Thermocouple	The premix pilot is proven to stay lit in hurricane force weather conditions. Testing has shown that a stable flame is present even in wind speeds greater than 150 mph in addition to rainfall of over 10 inches per hour. The pilot will be equipped with a Type K thermocouple for continuous monitoring of the pilot status. The pilot also meets or exceeds API 537 design requirements.
Retractable Pilot Components	For ease of service, instead of retracting the entire pilot, only the components that may need service are made retractable. This ensures that the location of the pilot with relation to the flare tip is maintained, ensuring proper ignition every time. The ignition probe and thermocouple are the only components that potentially require regular maintenance. Both components will be retractable so that maintenance can be performed without needing a shutdown of the flare or any special equipment.
Automatic Ignition/Monitoring Panel (Z-Purge)	The automatic pilot ignition and monitoring panel will continuously monitor the pilot and attempt to relight if a pilot failure signal is received. The control panel will require customer supplied electricity and also be skid mounted. A Z-Purge is included for installation in a Cl 1 Div 2 area.

LP Flare

Design Information (Estimated):

Source	LP #1	LP #2
Gas MW	48.5	48.5
Gas LHV (Btu/Scf)	2413	2413
Max Flow Rate (MMScfd)	3	1
Available Pressure (psig)	0.2	0.2
Temperature (°F)	120	120

Scope of Supply:

Qty	Equipment
1	Self-Supported Flare Stack - Corrosion Allowance = 1/16”
1	Air Assisted Flare Tip (AF)
1	Velocity Seal
1	Air Assist Blower (VFD Compatible)
2	HSLF Pilot w/ Type K Thermocouple - Duplex Thermocouple - Individual Fuel Gas Supply Lines - 100’ High Temperature HEI/TC Whip
2	Retractable Pilot Components
1	Automatic Ignition/Monitoring Panel (Z-Purge) - Junction Box and LCP to be 316SS MOC, Nema 4X
1	Group D Deflagration Arrester – 12” Dia.

Required Utilities:

Consumer	Utility Type	Consumption	Supply
Pilot Gas	Fuel Gas	130 Scfh	15 psig
Purge Gas*	Fuel Gas	230 Scfh	15 psig
Blower	Electricity	20 hp (27 A)	480 VAC / 3 Ph / 60 Hz
Control Panel	Electricity	10 A	120 VAC / 1 Ph / 60 Hz

*Purge gas to be oxygen free and not go to dew point at operating temperatures.

Customer Connections (Estimated, TBC by customer):

Service	Size	Type	Rating
Flare Gas	12"	RF	150#
Pilot Gas	1/2"	NPT	3000#

Equipment Description:

Self-Supported Flare Stack	The stack is mounted onto a customer supplied concrete foundation to secure the system and prevent it from blowing over in high winds.
Air Assisted Flare Tip (AF)	The flare tips use multi-jet technology to break up the exiting gas to allow for more fuel and air interaction to increase smokeless flaring. An air plenum is utilized to direct low pressure air into the combustion zone for turbulent mixing. Components located in the high heat zone will be made of 310SS or equivalent casting material. The tip will provide a VOC destruction efficiency of at least 98 wt%.
Velocity Seal	An integral purge reducing velocity seal is included to reduce the quantity of purge gas to prevent oxygen ingress through the flare tip at low rates.
Air Assist Blower (VFD Compatible)	For low pressure applications and/or heavy gas compositions, an air assist blower is required for smokeless operation. The blower utilizes ambient air to increase air and gas mixing in the combustion zone, which eliminates any smoke that may form in the flames. A VFD is recommended for fine tuning of the performance of the flare. VFD and flow or pressure transmitter for automated VFD control are by others.
HSLF Pilot w/ Type K Thermocouple	The premix pilot is proven to stay lit in hurricane force weather conditions. Testing has shown that a stable flame is present even in wind speeds greater than 150 mph in addition to rainfall of over 10 inches per hour. The pilot will be equipped with a Type K thermocouple for continuous monitoring of the pilot status. The pilot also meets or exceeds API 537 design requirements.
Retractable Pilot Components	For ease of service, instead of retracting the entire pilot, only the components that may need service are made retractable. This ensures that the location of the pilot with relation to the flare tip is maintained, ensuring proper ignition every time. The ignition probe and thermocouple are the only components that potentially require regular maintenance. Both components will be retractable so that maintenance can be performed without needing a shutdown of the flare or any special equipment.
Automatic Ignition/Monitoring Panel (Z-Purge)	The automatic pilot ignition and monitoring panel will continuously monitor the pilot and attempt to relight if a pilot failure signal is received. The control panel will require customer supplied electricity and also be skid mounted. A Z-Purge is included for installation in a Cl 1 Div 2 area.
Group D Deflagration Arrester	Due to potential for having combustible levels of oxygen in the flare gases, an arrester is recommended to ensure that any flashback from the flare tip is stopped before it can enter into the upstream piping system.

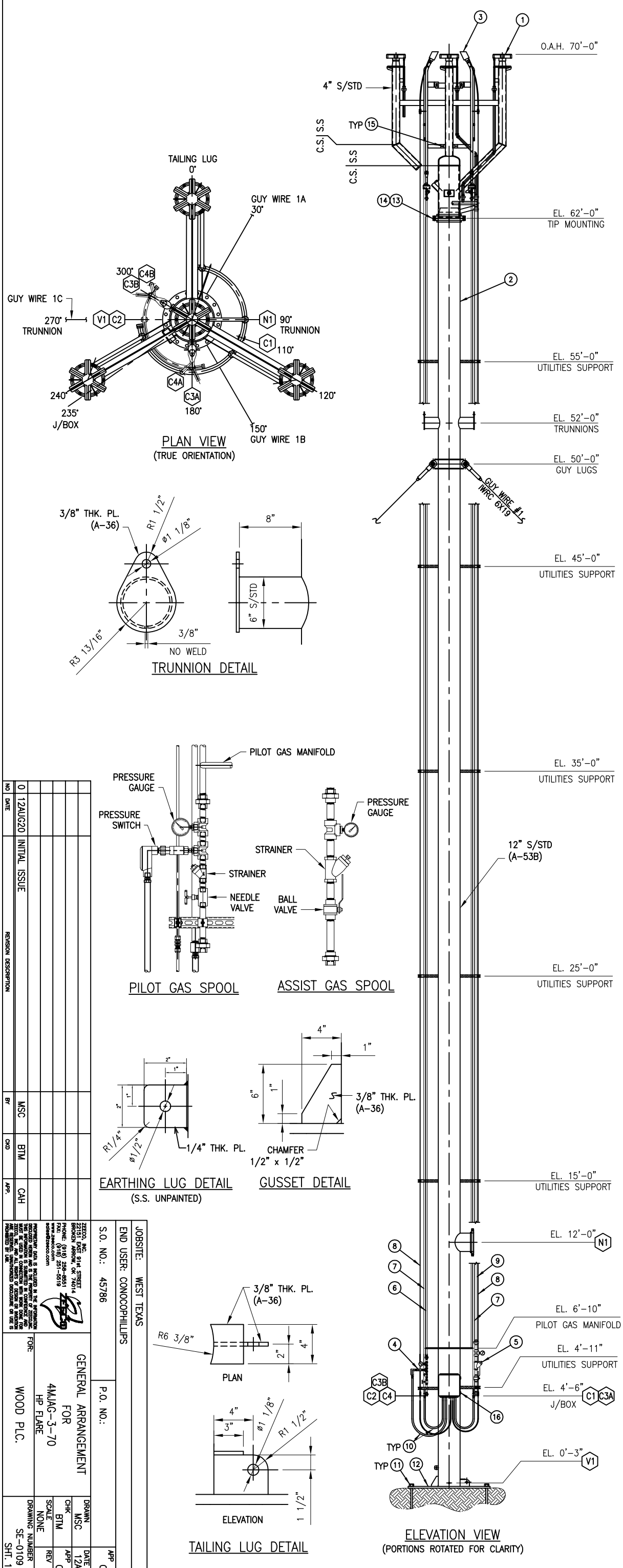

– PARTS LIST –

ITEM	QTY	DESCRIPTION	PART NO.	MATERIAL
1	1	4MJAG-3 FLARE TIP ASS'Y		SS/CS
2	1	FLARE STACK 12"ø RISER		A53-B
3	2	HSLF-Z-RJHEI-RJT/C PILOT ASSEMBLY	MB-4471	-//-
		COMPLETE WITH:		-//-
	–	RETRACTABLE HEI IGNITION PROBE	MB-4843	-//-
	–	RETRACTABLE DUPLEX THERMOCOUPLE		-//-
	–	HSLF-Z MIXER BODY		A-743 CF3M
	–	HSLF-Z MIXER SPUD		F837 18-8
	–	PIPE		A-312 TP316
	–	STRAINER W/ PLUG		A-743 CF8M
4	1	PILOT GAS SPOOL: 1/2"	MB-5921	A-105/A-106
5	1	ASSIST GAS SPOOL: 1"		A-105/A-106
6	2	PILOT GAS PIPE: 1/2" S/80		A-105/A-106
7	2	RETRACTABLE T/C TUBING: 3/8"ø		SS
8	2	RETRACTABLE HEI PIPE: 3/4" S/40		CS
9	1	ASSIST GAS PIPE: 1" S/40		A-105/A-106
10	3	LFMC FLEX CONDUIT: 1/2"		-//-
11	4	STAKE: 1"ø x 4'-0" LG.	KC-8267	A-36 OR EQ.
12	1	BASEPLATE: 4' x 4' x 1" THK.	KC-8266-1	A-36 OR EQ.
13	1	GASKET: 12" 150# R.F. B16.5		SPIRAL WOUND
14	12	STUD BOLT: 7/8" - 9UNC x 4 3/4" LG.		A193 B7
		w/ (2) 2H NUTS EA.		A194 2H
15	2	MACHINE BOLT: 1/2"ø x 1 1/4" LG.		A193 B8
		W/ HEAVY HEX NUT		A194 Gr 8
16	1	J/BOX (JB-100)		NEMA 4X - S.S.

–DESIGN DATA–

STACK TYPE	GUY WIRE SUPPORTED
FOUNDATION TYPE	N/A
DESIGN CODE	ASME STS-1, ASCE 7-16 & AISC
WIND DESIGN	115 mph (ASCE 7-16)
SEISMIC LOAD	S_S=0.136, S_1=0.035, I.F.=1.0, RISK CATEGORY II
	SITE CLASS "C" (ASCE 7-16)
FLUID	FLARE GAS
DESIGN PRESS.	100 psig
DESIGN TEMP.	-29 - +270°F
OPERATING PRESS.	35 PSIG
OPERATING TEMP.	0°F ~ +120° F
P.W.H.T.	NO
RADIOGRAPH	SPOT
CORROSION ALLOWANCE	C.S.~1/16"; S.S.~NONE
SYSTEM WEIGHT	4763 lbs (SEE TABLE BELOW)

– NOZZLE LEGEND –

ITEM	SERVICE	SIZE	RATING	TYPE	SCH/BORE	FLG. MAT'L
N1	FLARE GAS INLET	10"	150#	RFSO	SCH.40	A-105
C1	ASSIST GAS INLET	1"	3000#	FNPT	SCH.80	A-105
C2	PILOT GAS INLET	1/2"	3000#	FNPT	SCH.80	A-105
C3	T/C CONDUIT CONNECTION	1/2"	N/A	FNPT	N/A	N/A
C4	HEI CONDUIT CONNECTION	1/2"	N/A	FNPT	N/A	N/A
V1	VENT	1"	N/A	N/A	N/A	N/A

– NOTES –

1. PILOT MIXER ORIFICE DRILLED: 3/64"ø
2. PILOT GAS CONSUMPTION: 65 SCFH @ 15 PSIG (NAT. GAS) OR 29 SCFH @ 7 PSIG (PROPANE) PER PILOT.
3. PILOT ORIFICE DRILLING BASED ON 1000 BTU/SCF (LHV) GAS WITH 0.6 SP. GR.
4. ALL FLANGE BOLTING TO STRADDLE NORMAL CENTERLINES.
5. ALL EXTERNAL CARBON STEEL SURFACES TO BE PREPARED PER SSPC-SP6. PRIME WITH ONE COAT CARBOZINC 11 (2 -3 MILS DFT MIN.) PAINT ONE COAT THERMALINE 4700 (2 MIL DFT MIN.) SILVER FINISH. STAINLESS STEEL: NONE.
6. THE FLARE TIP REQUIRES A CONTINUOUS PURGE OF 100 SCFH WITH AN OXYGEN FREE GAS THAT WILL NOT GO TO DEW POINT AT OPERATING TEMPERATURES.
7. STRUCTURAL CONSIDERATIONS FOR ANCHOR STAKES TAKEN ASSUMING A MEDIUM STIFF CLAY SOIL TYPE.

– MAX. ALLOWABLE INLET NOZZLE LOAD API 537 –

PIPE SIZE (IN)	Fx	Fy	Fz	Mx	My	Mz
	lb	lb	lb	ft-lb	ft-lb	ft-lb
10"	1050	1950	1950	2790	2100	2100

– STACK FOUNDATION LOADS–

LOAD CASE	VERTICAL (LB)	SHEAR (LB)	MOMENT (LB-FT)
DL: DEAD LOAD	4763	0.0	0.0
PT: PRETENSION LOAD	3938	0.0	0.0
TL: THERMAL LOAD	638	0.0	0.0
NL: NOZZLE LOAD	2310	2420	23969
WL: WIND LOAD	22	726	10109
SL: SEISMIC LOAD	99	33	693

– WORST CASE SCREW ANCHOR LOADS–

LOAD CASE	VERTICAL (LB)	SHEAR (LB)	MOMENT (LB-FT)
DL: DEAD LOAD	0.0	0.0	0.0
PT: PRETENSION LOAD	1309	1320	0.0
TL: THERMAL LOAD	209	209	0.0
NL: NOZZLE LOAD	154	154	0.0
WL: WIND LOAD	1056	1067	0.0
SL: SEISMIC LOAD	88	88	0.0

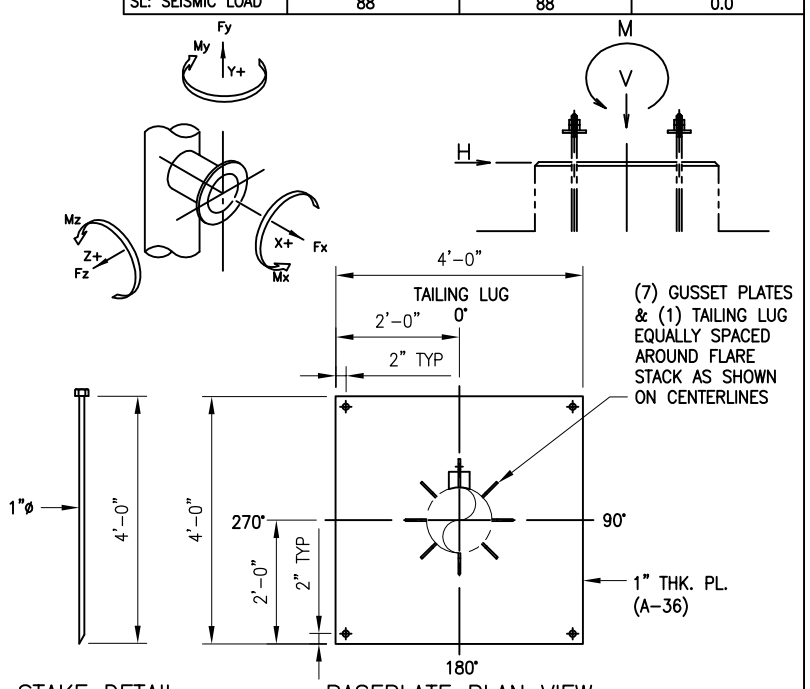

NO	DATE	REVISION DESCRIPTION	BY	CKD	APP.
0	12AUG20	INITIAL ISSUE	MSC	BTM	CAH

ZEECO, INC.
22151 E. 91st STREET
BROKEN ARROW, OK 74014
PHONE: (918) 258-8551
FAX: (918) 251-5516
www.zeeco.com
sales@zeeco.com

PROPRIETARY DATA IS INCLUDED IN THE INFORMATION REQUESTED HEREIN AND IS THE PROPERTY OF ZEECO, INC. THIS INFORMATION IS SUBMITTED IN CONFIDENCE AND MUST NOT BE DISCLOSED TO THIRD PARTIES WITHOUT ZEECO, INC. WRITTEN PERMISSION. ALL RIGHTS OF REPORM OR INVENTION ARE RESERVED. UNAUTHORIZED DISCLOSURE OR USE IS PROHIBITED BY LAW.

JOBSITE: WEST TEXAS
END USER: CONOCOPHILLIPS
S.O. NO.: 45786
P.O. NO.:

GENERAL ARRANGEMENT
FOR
4MJAG-3-70
HP FLARE

FOR:
WOOD PLC.

DRAWN	DATE
MSC	12AUG20
CHK	APP
BTM	CAH
SCALE	REV
NONE	0
DRAWING NUMBER	APP
SE-0109	CAH
SHT. 1 OF 1	

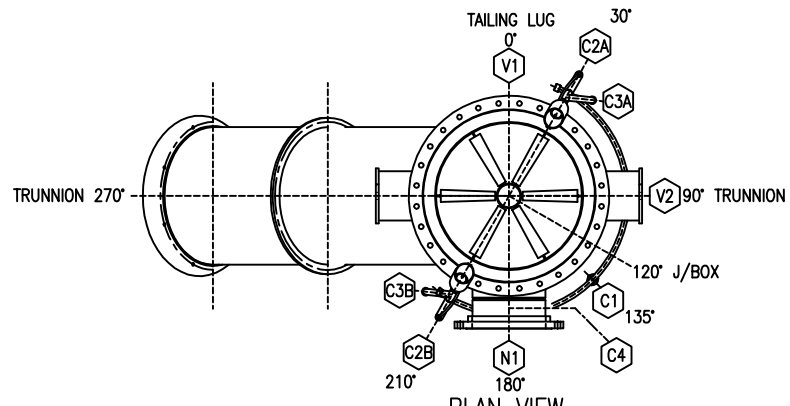

PLAN VIEW
(TRUE ORIENTATION)

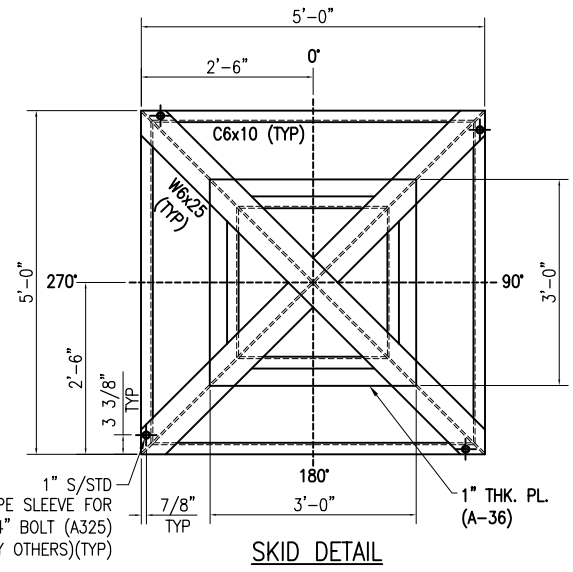

SKID DETAIL

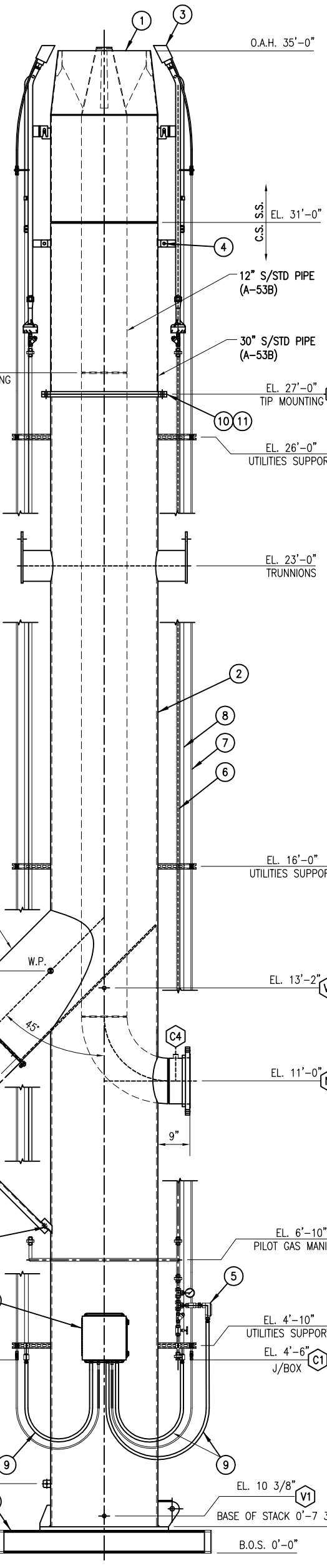

ELEVATION VIEW
(PORTIONS ROTATED FOR CLARITY)

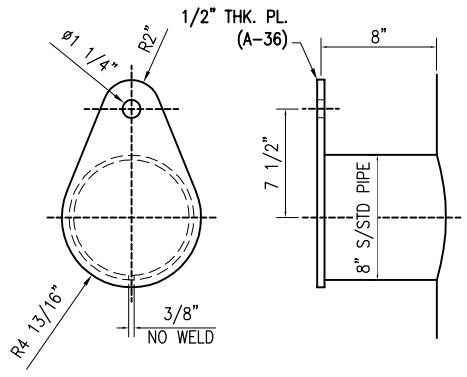

TRUNNION DETAIL

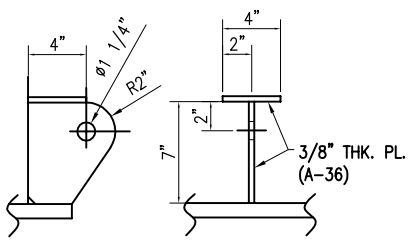

TAILING LUG DETAIL

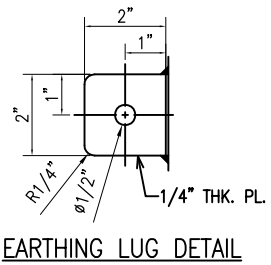

EARTHING LUG DETAIL
(S.S. UNPAINTED)

– PARTS LIST –

ITEM	QTY	DESCRIPTION	PART NO.	MATERIAL
1	1	AFTA-12/30 FLARE TIP ASSEMBLY		SS/CS
2	1	FLARE STACK 30"ø RISER		CS
3	2	HSLF-Z-RJHEI-RJT/C PILOT ASSEMBLY	MB-4471	-//-
		COMPLETE WITH:		-//-
	–	RETRACTABLE HEI IGNITION PROBE	MB-4609	-//-
	–	RETRACTABLE DUPLEX THERMOCOUPLE		-//-
	–	HSLF-Z MIXER BODY		A-743 CF3M
	–	HSLF-Z MIXER SPUD		F837 18-8
	–	PIPE		A-312 TP316
	–	STRAINER W/ PLUG		A-743 CF8M
4	2	MACHINE BOLT: 1/2"ø x 1 1/4" LG.		A193 B8
		W/ HEAVY HEX NUT		A194 Gr 8
5	1	PILOT GAS SPOOL: 1/2"	MB-5921	A-105/A-106
6	2	PILOT GAS PIPE: 1/2" S/80		A-105/A-106
7	2	RETRACTABLE T/C TUBING: 3/8"ø		SS
8	2	RETRACTABLE HEI PIPE: 3/4" S/40		CS
9	3	LFMC FLEX CONDUIT: 1/2"		-//-
10	1	GASKET: 2'-6 1/2 I.D. x 2'-11 O.D. w/ (28)		C4401
		7/8"ø HOLES EQUALLY SPACED ON 2'-8 1/2" B.C.D.		
11	28	STUD BOLT: 3/4"-10UNC x 4 3/4" LG.		A193 B7
		w/ (2) 2H NUTS EA.		A194 2H
12	1	GASKET: 24" PLATE FLANGE GASKET	KC-9658	C4401
13	8	HEX BOLT: 7/16"-14UNC x 1 3/4" LG.		A307
		w/ (1) NUT, (2) FLAT WASHERS,		
		& (1) LOCK WASHER EA.		
14	1	SKID: 5'-0"x5'-0"x7 3/8"H	KC-9658	A-36
15	1	J/BOX (JB-100)		NEMA 4X – S.S.
16	1	AXIAL BLOWER SUPPORT	KC-9658	A-36
17	2	HEX BOLT: 1/2-13UNC x 1 1/2" LG		A307
		w/ (1) NUT & (2) FLAT WASHERS EA.		

–DESIGN DATA–

STACK TYPE	SELF SUPPORTED
FOUNDATION TYPE	N/A
DESIGN CODE	ASME STS-1, ASCE 7-16 & AISC
WIND DESIGN	115 mph (ASCE 7-16)
SEISMIC LOAD	S_S=0.136, S_1=0.035, I.F.=1.0, RISK CATEGORY II
	SITE CLASS "C" (ASCE 7-16)
FLUID	FLARE GAS
DESIGN PRESS.	50 psig
DESIGN TEMP.	-29 – +270°F
OPERATING PRESS.	<1 PSIG
OPERATING TEMP.	0°F ~ +120° F
P.W.H.T.	NO
RADIOGRAPH	SPOT
CORROSION ALLOWANCE	C.S.~1/16"; S.S.~NONE
SYSTEM WEIGHT	7678 lbs (SEE TABLE BELOW)

– NOZZLE LEGEND –

ITEM	SERVICE	SIZE	RATING	TYPE	SCH/BORE	FLG. MAT'L
N1	LP FLARE GAS INLET	12"	150#	RFSO	SCH.40	A-105
N2	BLOWER CONNECTION	24"	N/A	PLATE	SCH.40	C.S.
N3	TIP CONNECTION	30"	N/A	PLATE	SCH.40	C.S.
C1	PILOT GAS INLET	1/2"	3000#	FNPT	SCH.80	A-105
C2	T/C CONDUIT CONNECTION	1/2"	N/A	FNPT	N/A	N/A
C3	HEI CONDUIT CONNECTION	1/2"	N/A	FNPT	N/A	N/A
C4	PRESSURE GUAGE CONNECTION	3/4"	3000#	FNPT	N/A	N/A
V1,2	VENT	1"	N/A	N/A	N/A	N/A

– NOTES –

1. PILOT MIXER ORIFICE DRILLED: 3/64"ø
2. PILOT GAS CONSUMPTION: 65 SCFH @ 15 PSIG (NAT. GAS) OR 29 SCFH @ 7 PSIG (PROPANE) PER PILOT.
3. PILOT ORIFICE DRILLING BASED ON 1000 BTU/SCF (LHV) GAS WITH 0.6 SP. GR.
4. ALL FLANGE BOLTING TO STRADDLE NORMAL CENTERLINES.
5. ALL EXTERNAL CARBON STEEL SURFACES TO BE PREPARED PER SSPC-SP6. PRIME WITH ONE COAT CARBOZINC 11 (2 -3 MILS DFT MIN.) PAINT ONE COAT THERMALINE 4700 (2 MIL DFT MIN.) SILVER FINISH. STAINLESS STEEL: NONE.
6. THE FLARE TIP REQUIRES A CONTINUOUS PURGE OF 230 SCFH WITH AN OXYGEN FREE GAS THAT WILL NOT GO TO DEW POINT AT OPERATING TEMPERATURES.

– MAX. ALLOWABLE INLET NOZZLE LOAD API 537 –

PIPE SIZE (IN)	Fx	Fy	Fz	Mx	My	Mz
	lb	lb	lb	ft-lb	ft-lb	ft-lb
12"	1200	2100	2100	3000	2250	2250

– STACK FOUNDATION LOADS–

LOAD CASE	VERTICAL (LB)	SHEAR (LB)	MOMENT (LB-FT)
DL: DEAD LOAD	7678	0.0	0.0
NL: NOZZLE LOAD	2310	2662	36058
WL: WIND LOAD	0.0	2343	39655
SL: SEISMIC LOAD	165	275	5907
VL: VORTEX LOAD	0.0	3443	80839

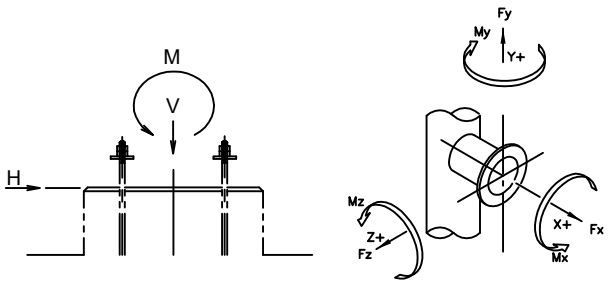

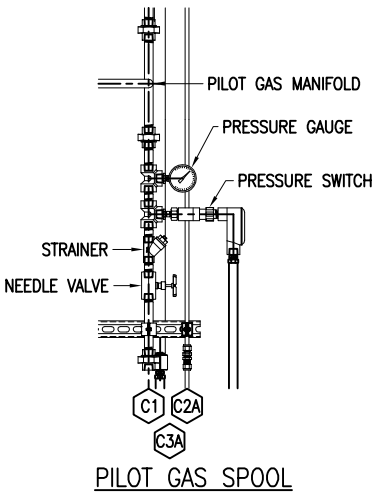

PILOT GAS SPOOL

NO	DATE	REVISION DESCRIPTION	BY	CHD	APP.
0	12AUG20	INITIAL ISSUE	MSC	BTM	CAH

JOBSITE: WEST TEXAS
END USER: CONOCOPHILLIPS
S.O. NO.: 45786
P.O. NO.:

ZEECO, INC. 215 S. 114 STREET BROKEN ARROW, OK 74014 PHONE: (918) 258-8551 FAX: (918) 251-5519 www.zeeco.com sales@zeeco.com

PROPRIETARY INFO IS INCLUDED IN THE INFORMATION DISCLOSED HEREIN AND IS THE PROPERTY OF ZEECO,INC. THIS INFORMATION IS SUBMITTED IN CONFIDENCE AND SHALL NOT BE DUPLICATED, USED OR DISCLOSED WITHOUT WRITTEN CONSENT OF ZEECO, INC. AND ALL RIGHTS OF DESIGN OR INVENTION ARE RESERVED. UNAUTHORIZED DISCLOSURE OR USE IS PROHIBITED BY LAW.

GENERAL ARRANGEMENT FOR AFTA-12/30-35 LP FLARE

FOR: WOOD PLC.

DRAWN	DATE	CHK	APP	SCALE	REV	DRAWING NUMBER
MSC	12AUG20	BTM	CAH	NONE	0	SE-0116 SHT. 1 OF 1

Section 8

Map(s)

Section 8

Map(s)

A map such as a 7.5 minute topographic quadrangle showing the exact location of the source. The map shall also include the following:

The UTM or Longitudinal coordinate system on both axes	An indicator showing which direction is north
A minimum radius around the plant of 0.8km (0.5 miles)	Access and haul roads
Topographic features of the area	Facility property boundaries
The name of the map	The area which will be restricted to public access
A graphical scale	

A site location map and an aerial image with a 0.5 mile boundary and access roads are provided.

U.S. DEPARTMENT OF THE INTERIOR
U.S. GEOLOGICAL SURVEY

The National Map
US Topo

PADUCA BREAKS WEST QUADRANGLE
NEW MEXICO-TEXAS
7.5-MINUTE SERIES

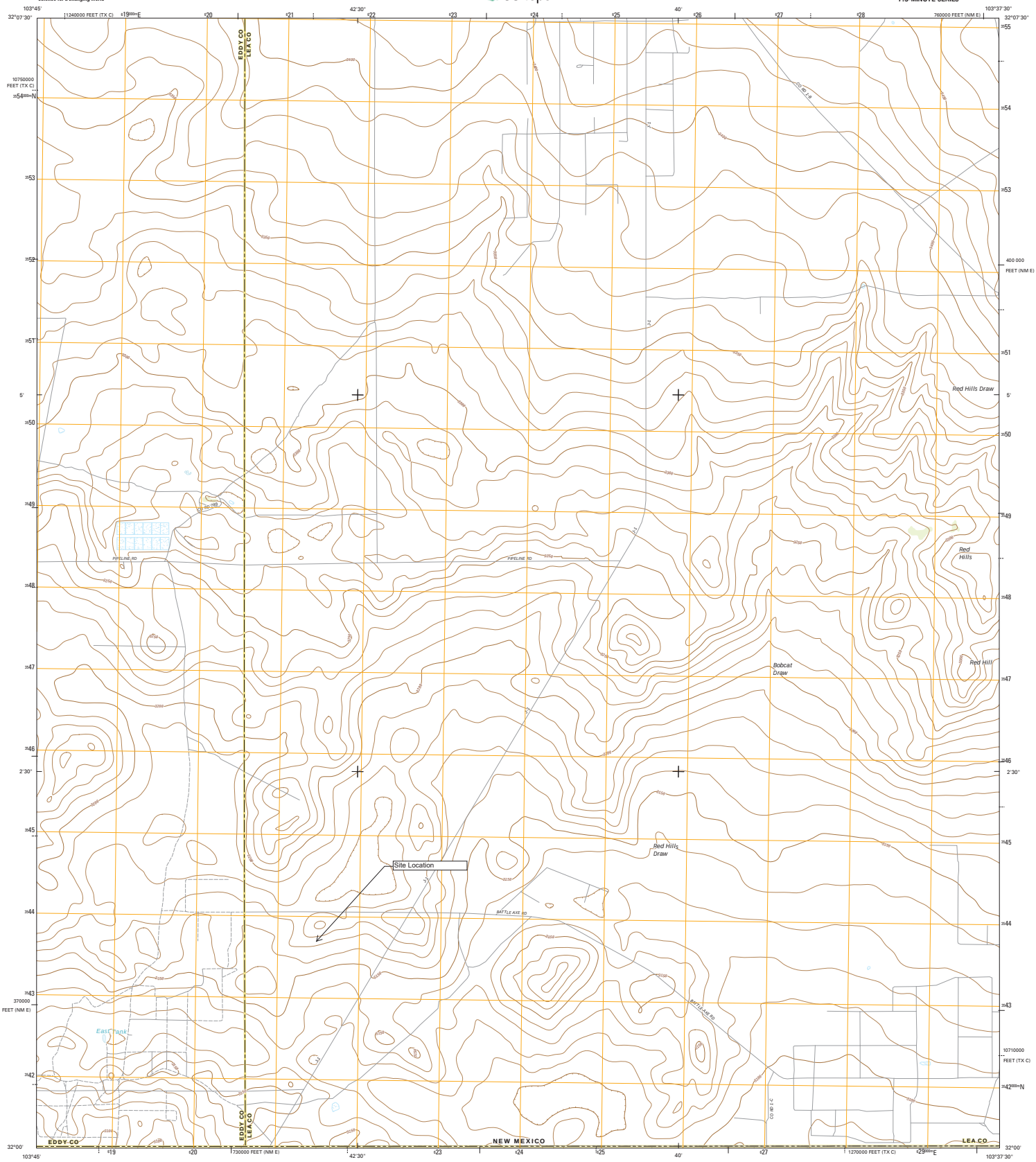

Produced by the United States Geological Survey
North American Datum of 1983 (NAD83)
World Geodetic System of 1984 (WGS84). Projection and 1 000-meter grid: Universal Transverse Mercator, Zone 13S
10 000-foot ticks: New Mexico Coordinate System of 1983 (east zone), Texas Coordinate System of 1983 (central zone)

This map is not a legal document. Boundaries may be generalized for this map scale. Private lands within government reservations may not be shown. Obtain permission before entering private lands.

Imagery.....NAIP, September 2014
Roads..... U.S. Census Bureau, 2015 - 2016
Names.....GNIS, 2016
Hydrography.....National Hydrography Dataset, 2014
Contours.....National Elevation Dataset, 2002
Boundaries.....Multiple sources; see metadata file 1972 - 2016
Public Land Survey System.....BLM, 2016
Wetlands.....FWS National Wetlands Inventory 1977 - 2014

MN
GN
0° 42'
12 MILS
7° 4'
126 MILS

UTM GRID AND 2017 MAGNETIC NORTH DECLINATION AT CENTER OF SHEET

U.S. National Grid
100,000-m Square ID
FR
Grid Zone Designation
13S

SCALE 1:24 000

KILOMETERS
METERS
MILES
FEET

CONTOUR INTERVAL 10 FEET
NORTH AMERICAN VERTICAL DATUM OF 1988

This map was produced to conform with the National Geospatial Program US Topo Product Standard, 2011.
A metadata file associated with this product is draft version 0.6.19

NEW MEXICO
QUADRANGLE LOCATION

1	2	3
4		5
6	7	8

ADJOINING QUADRANGLES

1 Big Sinks
2 Paduca Breaks NW
3 Bell Lake
4 Phantom Banks
5 Paduca Breaks East
6 Orla NE
7 Kyle Ranch
8 Rudd Draw NE

ROAD CLASSIFICATION

Expressway
Secondary Hwy
Ramp
Local Connector
Local Road
4WD
Interstate Route
US Route
State Route

PADUCA BREAKS WEST, NM-TX
2017

NSN: 7643016383819
NGA REF NO. USGSX24K33882

Zia Hills Central Facility

Aerial Image with 0.5 Mile Boundary and Access Roads

Section 9

Proof of Public Notice

Section 9

Proof of Public Notice

(for NSR applications submitting under 20.2.72 or 20.2.74 NMAC)
(This proof is required by: 20.2.72.203.A.14 NMAC "Documentary Proof of applicant's public notice")

☑ **I have read the AQB "Guidelines for Public Notification for Air Quality Permit Applications"**
This document provides detailed instructions about public notice requirements for various permitting actions. It also provides public notice examples and certification forms. Material mistakes in the public notice will require a re-notice before issuance of the permit.

Unless otherwise allowed elsewhere in this document, the following items document proof of the applicant's Public Notification. Please include this page in your proof of public notice submittal with checkmarks indicating which documents are being submitted with the application.

New Permit and **Significant Permit Revision** public notices must include all items in this list.

Technical Revision public notices require only items 1, 5, 9, and 10.

Per the Guidelines for Public Notification document mentioned above, include:

1. ☐ A copy of the certified letter receipts with post marks (20.2.72.203.B NMAC)
2. ☐ A list of the places where the public notice has been posted in at least four publicly accessible and conspicuous places, including the proposed or existing facility entrance. (e.g: post office, library, grocery, etc.)
3. ☐ A copy of the property tax record (20.2.72.203.B NMAC).
4. ☐ A sample of the letters sent to the owners of record.
5. ☐ A sample of the letters sent to counties, municipalities, and Indian tribes.
6. ☐ A sample of the public notice posted and a verification of the local postings.
7. ☐ A table of the noticed citizens, counties, municipalities and tribes and to whom the notices were sent in each group.
8. ☐ A copy of the public service announcement (PSA) sent to a local radio station and documentary proof of submittal.
9. ☐ A copy of the classified or legal ad including the page header (date and newspaper title) or its affidavit of publication stating the ad date, and a copy of the ad. When appropriate, this ad shall be printed in both English and Spanish.
10. ☐ A copy of the display ad including the page header (date and newspaper title) or its affidavit of publication stating the ad date, and a copy of the ad. When appropriate, this ad shall be printed in both English and Spanish.
11. ☐ A map with a graphic scale showing the facility boundary and the surrounding area in which owners of record were notified by mail. This is necessary for verification that the correct facility boundary was used in determining distance for notifying land owners of record.

COP is not required to conduct a public notice for a Part 70 permit application.

Section 10

Written Description of Operations

Section 10

Written Description of the Routine Operations of the Facility

---

A written description of the routine operations of the facility. Include a description of how each piece of equipment will be operated, how controls will be used, and the fate of both the products and waste generated. For modifications and/or revisions, explain how the changes will affect the existing process. In a separate paragraph describe the major process bottlenecks that limit production. The purpose of this description is to provide sufficient information about plant operations for the permit writer to determine appropriate emission sources.

Gas from well sites enter the facility through the inlet gas skid. The site uses natural gas engines to compress the gas for sales and gas lift, including twelve (12) Caterpillar 3606A4 engines (ENG1-ENG12). The Caterpillar engines are equipped with oxidation catalysts to reduce CO, VOC, and formaldehyde emissions. During compressor downtime or during an emergency, a flare (FL1) is used to flare high pressure gas. If any of the compressors go down, the Inlet gas skid limits the amount coming Into the facility to minimize flaring. Gas is dehydrated using triethylene glycol dehydration units (DEHY1-DEHY4). The glycol still vent vapors are routed to condensers. Flash tank and uncondensed vapors are burned in the glycol regenerator burners (RB1-RB4). Dehydrated gas is used for gas lift or transferred to a gas sales line.

Liquids generated from the slug catcher and compressor dumps are routed to a line heater (LH1), then to an overhead gas scrubber (OHS1). These units are used to flash the liquids and route gas to sales via by a vapor recovery system (VRU1-VRU3). Water is routed to a water degassing vessel (WDGV1) and oil is routed to an oil tank (OT5) prior to being piped to the stabilizers. Vapors from both are carried to sales via VRU1-VRU3.

Oil from well sites enters the facility through inlet separators and into three (3) stabilizers (STAB1-STAB3). Gas from the stabilizer vessels is mixed with the gas from the inlet separator and routed to the inlet of the compressors. The facility is designed such that the stabilizer and inlet separator gas always flows to sales. Oil then flows to four (4) sales tanks (OT1-OT4) controlled by a VRU1-VRU3. During VRU downtime, these streams are routed a redundant flare system (FL2-FL3). Oil is shipped offsite via pipeline LACT.

Water from well sites is routed to WDGV1 then to (two (2) gun barrel separators (GB1- GB2), which skim any remaining oil from the incoming water. The water then flows to produced water tanks (WT1-WT8) for temporary storage prior to being piped offsite. Any skimmed oil is routed to two slop oil tanks (ST1-ST2). Slop oil is routed back to the stabilizer vessels. Water degas vessel, gun barrel, and slop tank vapors are controlled using VRU1-VRU3, with vapors routed to FL2-FL3 during VRU downtime. Water is piped offsite.

Section 11

Source Determination

Section 11

Source Determination

Source submitting under 20.2.70, 20.2.72, 20.2.73, and 20.2.74 NMAC

Sources applying for a construction permit, PSD permit, or operating permit shall evaluate surrounding and/or associated sources (including those sources directly connected to this source for business reasons) and complete this section. Responses to the following questions shall be consistent with the Air Quality Bureau's permitting guidance, Single Source Determination Guidance, which may be found on the Applications Page in the Permitting Section of the Air Quality Bureau website.

Typically, buildings, structures, installations, or facilities that have the same SIC code, that are under common ownership or control, and that are contiguous or adjacent constitute a single stationary source for 20.2.70, 20.2.72, 20.2.73, and 20.2.74 NMAC applicability purposes. Submission of your analysis of these factors in support of the responses below is optional, unless requested by NMED.

A. Identify the emission sources evaluated in this section (list and describe)**:**

B. Apply the 3 criteria for determining a single source:

SIC Code: Surrounding or associated sources belong to the same 2-digit industrial grouping (2-digit SIC code) as this facility, OR surrounding or associated sources that belong to different 2-digit SIC codes are support facilities for this source.

☑ **Yes** ☐ **No**

Common Ownership or Control: Surrounding or associated sources are under common ownership or control as this source.

☑ **Yes** ☐ **No**

Contiguous or Adjacent: Surrounding or associated sources are contiguous or adjacent with this source.

☑ **Yes** ☐ **No**

C. Make a determination:

☑ The source, as described in this application, constitutes the entire source for 20.2.70, 20.2.72, 20.2.73, or 20.2.74 NMAC applicability purposes. If in "A" above you evaluated only the source that is the subject of this application, all "**YES**" boxes should be checked. If in "A" above you evaluated other sources as well, you must check **AT LEAST ONE** of the boxes "**NO**" to conclude that the source, as described in the application, is the entire source for 20.2.70, 20.2.72, 20.2.73, and 20.2.74 NMAC applicability purposes.

☐ The source, as described in this application, **does not** constitute the entire source for 20.2.70, 20.2.72, 20.2.73, or 20.2.74 NMAC applicability purposes (A permit may be issued for a portion of a source). The entire source consists of the following facilities or emissions sources (list and describe):

Section 12

PSD Determination

Section 12

Section 12.A
PSD Applicability Determination for All Sources

(Submitting under 20.2.72, 20.2.74 NMAC)

A PSD applicability determination for all sources. For sources applying for a significant permit revision, apply the applicable requirements of 20.2.74.AG and 20.2.74.200 NMAC and to determine whether this facility is a major or minor PSD source, and whether this modification is a major or a minor PSD modification. It may be helpful to refer to the procedures for Determining the Net Emissions Change at a Source as specified by Table A-5 (Page A.45) of the EPA New Source Review Workshop Manual to determine if the revision is subject to PSD review.

A. This facility is:

- ☑ **a minor PSD source before and after this modification (if so, delete C and D below).**
- ☐ **a major PSD source before this modification. This modification will make this a PSD minor source.**
- ☐ **an existing PSD Major Source that has never had a major modification requiring a BACT analysis.**
- ☐ **an existing PSD Major Source that has had a major modification requiring a BACT analysis**
- ☐ **a new PSD Major Source after this modification.**

Section 13

Determination of State & Federal Regulations

Section 13

Determination of State & Federal Air Quality Regulations

This section lists each state and federal air quality regulation that may apply to your facility and/or equipment that are stationary sources of regulated air pollutants.

Not all state and federal air quality regulations are included in this list. Go to the Code of Federal Regulations (CFR) or to the Air Quality Bureau's regulation page to see the full set of air quality regulations.

Required Information for Specific Equipment:
For regulations that apply to specific source types, in the 'Justification' column **provide any information needed to determine if the regulation does or does not apply**. **For example**, to determine if emissions standards at 40 CFR 60, Subpart IIII apply to your three identical stationary engines, we need to know the construction date as defined in that regulation; the manufacturer date; the date of reconstruction or modification, if any; if they are or are not fire pump engines; if they are or are not emergency engines as defined in that regulation; their site ratings; and the cylinder displacement.

Required Information for Regulations that Apply to the Entire Facility:
See instructions in the 'Justification' column for the information that is needed to determine if an 'Entire Facility' type of regulation applies (e.g. 20.2.70 or 20.2.73 NMAC).

Regulatory Citations for Regulations That Do Not, but Could Apply:
If there is a state or federal air quality regulation that does not apply, but you have a piece of equipment in a source category for which a regulation has been promulgated, you must **provide the low level regulatory citation showing why your piece of equipment is not subject to or exempt from the regulation. For example** if you have a stationary internal combustion engine that is not subject to 40 CFR 63, Subpart ZZZZ because it is an existing 2 stroke lean burn stationary RICE with a site rating of more than 500 brake HP located at a major source of HAP emissions, your citation would be 40 CFR 63.6590(b)(3)(i). **We don't want a discussion of every non-applicable regulation, but if it is possible a regulation could apply, explain why it does not. For example,** if your facility is a power plant, you do not need to include a citation to show that 40 CFR 60, Subpart OOO does not apply to your non-existent rock crusher.

Regulatory Citations for Emission Standards:
For each unit that is subject to an emission standard in a source specific regulation, such as 40 CFR 60, Subpart OOO or 40 CFR 63, Subpart HH, include the low level regulatory citation of that emission standard. Emission standards can be numerical emission limits, work practice standards, or other requirements such as maintenance. **Here are examples:** a glycol dehydrator is subject to the general standards at 63.764C(1)(i) through (iii); an engine is subject to 63.6601, Tables 2a and 2b; a crusher is subject to 60.672(b), Table 3 and all transfer points are subject to 60.672(e)(1)

Federally Enforceable Conditions:
All federal regulations are federally enforceable. All Air Quality Bureau State regulations are federally enforceable except for the following: affirmative defense portions at 20.2.7.6.B, 20.2.7.110(B)(15), 20.2.7.11 through 20.2.7.113, 20.2.7.115, and 20.2.7.116; 20.2.37; 20.2.42; 20.2.43; 20.2.62; 20.2.63; 20.2.86; 20.2.89; and 20.2.90 NMAC. Federally enforceable means that EPA can enforce the regulation as well as the Air Quality Bureau and federally enforceable regulations can count toward determining a facility's potential to emit (PTE) for the Title V, PSD, and nonattainment permit regulations.

INCLUDE ANY OTHER INFORMATION NEEDED TO COMPLETE AN APPLICABILITY DETERMINATION OR THAT IS RELEVENT TO YOUR FACILITY'S NOTICE OF INTENT OR PERMIT.

EPA Applicability Determination Index for 40 CFR 60, 61, 63, etc: http://cfpub.epa.gov/adi/

STATE REGU-LATIONS CITATION	Title	Applies? Enter Yes or No	Unit(s) or Facility	JUSTIFICATION: (You may delete instructions or statements that do not apply in the justification column to shorten the document.)
20.2.1 NMAC	General Provisions	Yes	Facility	General Provisions apply to Notice of Intent, Construction, and Title V permit applications.
20.2.3 NMAC	Ambient Air Quality Standards NMAAQS	Yes	Facility	If subject, this would normally apply to the entire facility. 20.2.3 NMAC is a State Implementation Plan (SIP) approved regulation that limits the maximum allowable concentration of, Sulfur Compounds, Carbon Monoxide and Nitrogen Dioxide. Title V applications, see exemption at 20.2.3.9 NMAC. The TSP NM ambient air quality standard was repealed by the EIB effective November 30, 2018.
20.2.7 NMAC	Excess Emissions	Yes	Facility	If your entire facility or individual pieces of equipment are subject to emissions limits in a permit or numerical emissions standards in a federal or state regulation, this applies. This would not apply to Notices of Intent since these are not permits.
20.2.23 NMAC	Fugitive Dust Control	No	N/A	This is not a mining facility.
20.2.33 NMAC	Gas Burning Equipment - Nitrogen Dioxide	No	N/A	None of the equipment has a rating greater than 100 MMBtu/hr.
20.2.34 NMAC	Oil Burning Equipment: NO_2	No	N/A	This facility has no oil burning equipment.
20.2.35 NMAC	Natural Gas Processing Plant	No	N/A	The facility is not a gas processing plant.
20.2.37 and 20.2.36 NMAC	Petroleum Processing Facilities and Refineries	N/A	N/A	**These regulations were repealed by the Environmental Improvement Board. If you had equipment subject to 20.2.37 NMAC before the repeal, your combustion emission sources are now subject to 20.2.61 NMAC.**
20.2.38 NMAC	Hydrocarbon Storage Facility	Yes	OT1-OT4, ST1-ST2	The site is subject to 20.2.38.109 and 112. The site uses a VRU/Flare vent system to control emissions.
20.2.39 NMAC	Sulfur Recovery Plant - Sulfur	No	N/A	The facility does not operate a sulfur recovery plant.
20.2.50 NMAC	Oil and Gas Sector – Ozone Precursor Pollutants			Check the box for the subparts that are applicable: ☑113 – Engines and Turbines – Some are existing and some new, but all engines comply with the NOx standards for new engines. ☑114 – Compressor Seals ☑115 – Control Devices and Closed Vent Systems ☑116 – Equipment Leaks and Fugitive Emissions ☐ 117 – Natural Gas Well Liquid Unloading – No affected sources. ☑ 118 – Glycol Dehydrators - DEHY1-2 are less than 2 tpy. DEHY3-4 are greater than 2 tpy and controlled in accordance with 20.2.50 using a flare with a DRE of 98%. ☐ 119 – Heaters - No affected sources. ☐ 120 – Hydrocarbon Liquid Transfers – Pipeline is primary means of transfer. ☐121 – Pig Launching and Receiving - No affected sources. ☐122 – Pneumatic Controllers and Pumps - No affected sources. ☐ 123 – Storage Vessels - Storage vessel PTE are less than 2 tpy, limited by this permit. ☐124 – Well Workovers - No affected sources. ☐ 125 – Small Business Facilities – Not applicable ☐126 – Produced Water Management Unit - No affected sources. ☐127 – Flowback Vessels and Preproduction Operations - No affected sources.
20.2.61.109 NMAC	Smoke & Visible Emissions	Yes	FL1-FL3, STAB1-3, ENG1-12, RB1-4, LH1	This regulation that limits opacity to 20% applies to Stationary Combustion Equipment, such as engines, boilers, heaters, and flares.

STATE REGU-LATIONS CITATION	Title	Applies? Enter Yes or No	Unit(s) or Facility	JUSTIFICATION: (You may delete instructions or statements that do not apply in the justification column to shorten the document.)
20.2.70 NMAC	Operating Permits	Yes	Facility	The facility is a major source of VOC.
20.2.71 NMAC	Operating Permit Fees	Yes	Facility	The facility is a major source of VOC.
20.2.72 NMAC	Construction Permits	Yes	Facility	The facility operates under NSR Permit 7746.
20.2.73 NMAC	NOI & Emissions Inventory Requirements	Yes	Facility	The site is subject to the emissions inventory requirements of 20.2.73 NMAC.
20.2.74 NMAC	Permits – Prevention of Significant Deterioration (PSD)	No	N/A	The facility is not a major PSD site.
20.2.75 NMAC	Construction Permit Fees	Yes	Facility	A permit fee is included with this application.
20.2.77 NMAC	New Source Performance	No	ENG1-12	See regulatory discussion in Federal Regulations Citation section.
20.2.78 NMAC	Emission Standards for HAPS	No	N/A	The facility does not fit into any of the source categories.
20.2.79 NMAC	Permits – Nonattainment Areas	No	N/A	The facility is not located in a nonattainment area.
20.2.80 NMAC	Stack Heights	No	N/A	There are no stacks to which this regulation would apply.
20.2.82 NMAC	MACT Standards for source categories of HAPS	Yes	ENG1-12, DEHY1 - DEHY4	See regulatory discussion in Federal Regulations Citation section.

NSPS 40 CFR 60, Subpart A	General Provisions	Yes	Units subject to 40 CFR 60	Applies if any other Subpart in 40 CFR 60 applies.
NSPS 40 CFR60.40a, Subpart Da	Subpart Da, Performance Standards for **Electric Utility Steam Generating Units**	No	N/A	The facility does not operate any electric utility steam generating units.
NSPS 40 CFR60.40b Subpart Db	**Electric Utility Steam Generating Units**	No	N/A	The facility does not operate any electric utility steam generating units.

40 CFR 60.40c, Subpart Dc	Small Industrial-Commercial-Institutional Steam Generating Units	No	N/A	The facility does not operate any affected sources.
NSPS 40 CFR 60, Subpart Ka	Tanks After May 18, 1978, and **Prior** to July 23, 1984	No	N/A	The facility does not operate any affected sources.
NSPS 40 CFR 60, Subpart Kb	Tanks Commenced **After** July 23, 1984	No	N/A	The hydrocarbons are stored prior to custody transfer.
NSPS 40 CFR 60.330 Subpart GG	**Stationary Gas Turbines**	No	N/A	The facility does not operate any affected sources.
NSPS 40 CFR 60, Subpart KKK	Leaks of VOC from **Onshore Gas Plants**	No	N/A	The facility does not operate any affected sources.
NSPS 40 CFR Part 60 Subpart LLL	**Onshore Natural Gas Processing**: SO_2 Emissions	No	N/A	The facility does not operate a sweetening unit.
NSPS 40 CFR Part 60 Subpart OOOO	O&G sites after August 23, 2011 and before September 18, 2015	No	N/A	The site post-dates Subpart OOOO.
NSPS 40 CFR Part 60 Subpart OOOOa	O&G Sites After September 18, 2015	Yes	FUG, ENG1-12	The oil and water storage tanks were constructed after the applicability date of the rule; however emissions are limited by permit to less than 6 tpy. The site uses low-bleed pneumatic controllers. The compressors comply with the requirements of §60.5385a. The site is subject to leak monitoring requirements for fugitive components specified in §60.5397a.
NSPS 40 CFR 60 Subpart IIII	Stationary Compression Ignition Internal Combustion Engines	No	N/A	The facility does not operate any affected sources.
NSPS 40 CFR Part 60 Subpart JJJJ	Stationary Spark Ignition Internal Combustion Engines	Yes	ENG1-12	The site is subject to the emissions limitations in Table 1.
NSPS 40 CFR 60 Subpart TTTT	Greenhouse Gas Emissions for Electric Generating Units	No	N/A	The facility does not operate any affected sources.
NSPS 40 CFR 60 Subpart UUUU	Greenhouse Gas Emissions and Compliance Times for Electric Utility Generating Units	No	N/A	The facility does not operate any affected sources.
NSPS 40 CFR 60, Subparts WWW, XXX, Cc, and Cf	Municipal Solid Waste (MSW) Landfills	No	N/A	The facility does not operate any affected sources.
NESHAP 40 CFR 61 Subpart A	General Provisions	See Below	See Below	See regulatory discussion below.

NESHAP 40 CFR 61 Subpart E	National Emission Standards for Mercury	No	N/A	The facility does not operate any affected sources.
NESHAP 40 CFR 61 Subpart V	Equipment Leaks (Fugitive Emission Sources)	No	N/A	The facility does not operate any affected sources.
MACT 40 CFR 63, Subpart A	General Provisions	Yes	Units Subject to 40 CFR 63	Applies if any other Subpart in 40 CFR 63 applies.
MACT 40 CFR 63.760 Subpart HH	**Oil and Natural Gas Production Facilities**	Yes	DEHY1-DEHY4	The site is an area sources of HAP and the dehydrators are subject to Subpart HH. Since benzene emissions are restricted to less than 1 tpy per a federally-enforceable permit; therefore, the unit is exempt from any requirements per §63.764(e)(1)(ii).
MACT 40 CFR 63 Subpart HHH		No	N/A	The facility does not operate any affected sources.
MACT 40 CFR 63 Subpart DDDDD	Major Industrial, Commercial, and Institutional Boilers & Process Heaters	No	N/A	The facility does not operate any affected sources.
MACT 40 CFR 63 Subpart UUUUU	Coal & Oil Fire Electric Utility Steam Generating Unit	No	N/A	The facility does not operate any affected sources.
MACT 40 CFR 63 Subpart ZZZZ	RICE MACT	Yes	ENG1-12	ENG1-12 comply with NSPS JJJJ to comply with NESHAP ZZZZ.
40 CFR 64	Compliance Assurance Monitoring	No	N/A	Since dehydrator flash tank and still vent emissions are routed back to the process and emissions are less than 100 tpy, CAM is not applicable. Since VRU downtime emissions are less than 100 tpy, CAM is not applicable to the tanks and vessels.
40 CFR 68	Chemical Accident Prevention	No	N/A	The facility does not store any chemicals above threshold quantities.
Title IV – Acid Rain 40 CFR 72	Acid Rain	No	N/A	The facility does not have any units subject to the Acid Rain regulations.
Title IV – Acid Rain 40 CFR 73	Sulfur Dioxide Allowance Emissions	No	N/A	The facility does not have any units subject to the Acid Rain regulations.
Title IV-Acid Rain 40 CFR 75	Continuous Emissions Monitoring	No	N/A	The facility does not have any units subject to the Acid Rain regulations.
Title IV – Acid Rain 40 CFR 76	Acid Rain Nitrogen Oxides Emission	No	N/A	The facility does not have any units subject to the Acid Rain regulations.
Title VI – 40 CFR 82	Protection of Stratospheric Ozone	No	N/A	The facility does not service, maintain, or repair equipment containing refrigerants.

Section 14

Operational Plan to Mitigate Emissions

Section 14

Operational Plan to Mitigate Emissions

(Submitting under 20.2.70, 20.2.72, 20.2.74 NMAC)

☑ **Title V Sources** (20.2.70 NMAC)**:** By checking this box and certifying this application the permittee certifies that it has developed an **Operational Plan to Mitigate Emissions During Startups, Shutdowns, and Emergencies** defining the measures to be taken to mitigate source emissions during startups, shutdowns, and emergencies as required by 20.2.70.300.D.5(f) and (g) NMAC. This plan shall be kept on site to be made available to the Department upon request. This plan should not be submitted with this application.

☑ **NSR** (20.2.72 NMAC)**, PSD** (20.2.74 NMAC) **& Nonattainment** (20.2.79 NMAC) **Sources:** By checking this box and certifying this application the permittee certifies that it has developed an **Operational Plan to Mitigate Source Emissions During Malfunction, Startup, or Shutdown** defining the measures to be taken to mitigate source emissions during malfunction, startup, or shutdown as required by 20.2.72.203.A.5 NMAC. This plan shall be kept on site to be made available to the Department upon request. This plan should not be submitted with this application.

☑ **Title V** (20.2.70 NMAC)**, NSR** (20.2.72 NMAC)**, PSD** (20.2.74 NMAC) **& Nonattainment** (20.2.79 NMAC) **Sources:** By checking this box and certifying this application the permittee certifies that it has established and implemented a Plan to Minimize Emissions During Routine or Predictable Startup, Shutdown, and Scheduled Maintenance through work practice standards and good air pollution control practices as required by 20.2.7.14.A and B NMAC. This plan shall be kept on site or at the nearest field office to be made available to the Department upon request. This plan should not be submitted with this application.

ConocoPhillips maintains written plans to ensure procedures are following during periods of startup, shutdown, and malfunction.

Section 15

Alternative Operating Scenarios

Section 15

Alternative Operating Scenarios

(Submitting under 20.2.70, 20.2.72, 20.2.74 NMAC)

Alternative Operating Scenarios: Provide all information required by the department to define alternative operating scenarios. This includes process, material and product changes; facility emissions information; air pollution control equipment requirements; any applicable requirements; monitoring, recordkeeping, and reporting requirements; and compliance certification requirements. Please ensure applicable Tables in this application are clearly marked to show alternative operating scenario.

Construction Scenarios: When a permit is modified authorizing new construction to an existing facility, NMED includes a condition to clearly address which permit condition(s) (from the previous permit and the new permit) govern during the interval between the date of issuance of the modification permit and the completion of construction of the modification(s). There are many possible variables that need to be addressed such as: Is simultaneous operation of the old and new units permitted and, if so for example, for how long and under what restraints? In general, these types of requirements will be addressed in Section A100 of the permit, but additional requirements may be added elsewhere. Look in A100 of our NSR and/or TV permit template for sample language dealing with these requirements. Find these permit templates at: www.env.nm.gov/air-quality/permitting-section-procedures-and-guidance/. Compliance with standards must be maintained during construction, which should not usually be a problem unless simultaneous operation of old and new equipment is requested.

In this section, under the bolded title "Construction Scenarios", specify any information necessary to write these conditions, such as: conservative-realistic estimated time for completion of construction of the various units, whether simultaneous operation of old and new units is being requested (and, if so, modeled), whether the old units will be removed or decommissioned, any PSD ramifications, any temporary limits requested during phased construction, whether any increase in emissions is being requested as SSM emissions or will instead be handled as a separate Construction Scenario (with corresponding emission limits and conditions, etc.

There are no alternate operating scenarios.

Section 16

Air Dispersion Modeling

Section 16

Air Dispersion Modeling

1) Minor Source Construction (20.2.72 NMAC) and Prevention of Significant Deterioration (PSD) (20.2.74 NMAC) ambient impact analysis (modeling): Provide an ambient impact analysis as required at 20.2.72.203.A(4) and/or 20.2.74.303 NMAC and as outlined in the Air Quality Bureau's Dispersion Modeling Guidelines found on the Planning Section's modeling website. If air dispersion modeling has been waived for one or more pollutants, attach the AQB Modeling Section modeling waiver approval documentation.
2) SSM Modeling: Applicants must conduct dispersion modeling for the total short term emissions during routine or predictable startup, shutdown, or maintenance (SSM) using realistic worst case scenarios following guidance from the Air Quality Bureau's dispersion modeling section. Refer to "Guidance for Submittal of Startup, Shutdown, Maintenance Emissions in Permit Applications (http://www.env.nm.gov/aqb/permit/app_form.html) for more detailed instructions on SSM emissions modeling requirements.
3) Title V (20.2.70 NMAC) ambient impact analysis: Title V applications must specify the construction permit and/or Title V Permit number(s) for which air quality dispersion modeling was last approved. Facilities that have only a Title V permit, such as landfills and air curtain incinerators, are subject to the same modeling required for preconstruction permits required by 20.2.72 and 20.2.74 NMAC.

What is the purpose of this application?	Enter an X for each purpose that applies
New PSD major source or PSD major modification (20.2.74 NMAC). See #1 above.	
New Minor Source or significant permit revision under 20.2.72 NMAC (20.2.72.219.D NMAC). See #1 above. **Note:** Neither modeling nor a modeling waiver is required for VOC emissions.	
Reporting existing pollutants that were not previously reported.	
Reporting existing pollutants where the ambient impact is being addressed for the first time.	
Title V application (new, renewal, significant, or minor modification. 20.2.70 NMAC). See #3 above.	X NSR 7746
Relocation (20.2.72.202.B.4 or 72.202.D.3.c NMAC)	
Minor Source Technical Permit Revision 20.2.72.219.B.1.d.vi NMAC for like-kind unit replacements.	
Other: i.e. SSM modeling. See #2 above.	
This application does not require modeling since this is a No Permit Required (NPR) application.	
This application does not require modeling since this is a Notice of Intent (NOI) application (20.2.73 NMAC).	
This application does not require modeling according to 20.2.70.7.E(11), 20.2.72.203.A(4), 20.2.74.303, 20.2.79.109.D NMAC and in accordance with the Air Quality Bureau's Modeling Guidelines.	

Check each box that applies:

☐ See attached, approved modeling **waiver for all** pollutants from the facility.
☐ See attached, approved modeling **waiver for some** pollutants from the facility.
☐ Attached in Universal Application Form 4 (UA4) is a **modeling report for all** pollutants from the facility.
☐ Attached in UA4 is a **modeling report for some** pollutants from the facility.
☑ No modeling is required.

Section 17

Compliance Test History

Section 17

Compliance Test History

(Submitting under 20.2.70, 20.2.72, 20.2.74 NMAC)

To show compliance with existing NSR permits conditions, you must submit a compliance test history. The table below provides an example.

Unit No.	Emission Point	Test Description	Test Date
N6W00861	ENG1	NSPS JJJJ Test	2/27/2023
JFE01170	ENG2	NSPS JJJJ Test	3/2/2023
JFE01205	ENG3	NSPS JJJJ Test	3/1/2023
JFE01818	ENG4	NSPS JJJJ Test	2/28/2023
JFE01188	ENG5	NSPS JJJJ Test	3/1/2023
JFE01204	ENG6	NSPS JJJJ Test	3/3/2023
JFE01745	ENG7	NSPS JJJJ Test	2/28/2023
JFE01728	ENG8	NSPS JJJJ Test	2/27/2023

Section 18

Addendum for Streamline Applications

Section 18

Addendum for Streamline Applications

Do not print this section unless this is a streamline application.

Streamline Applications do not require a complete application. Submit Sections 1-A, 1-B, 1-D, 1-F, 1-G, 2-A, 2-C thru L, Sections 3 thru 8, Section 13, Section 18, Section 22, and Section 23 (Certification). Other sections may be required at the discretion of the Department. 20.2.72.202 NMAC Exemptions do not apply to Streamline sources. 20.2.72.219 NMAC revisions and modifications do not apply to Streamline sources, thus 20.2.72.219 type actions require a complete new application submittal. Please do not print sections of a streamline application that are not required.

This is not a Streamline application.

Section 19

Requirements for Title V Program

Section 19

Requirements for Title V Program

Do not print this section unless this is a Title V application.

Who Must Use this Attachment:

* Any major source as defined in 20.2.70 NMAC.
* Any source, including an area source, subject to a standard or other requirement promulgated under Section 111 - Standards of Performance for New Stationary Sources, or Section 112 Hazardous Air Pollutants, of the 1990 federal Clean Air Act ("federal Act"). Non-major sources subject to Sections 111 or 112 of the federal Act are exempt from the obligation to obtain an 20.2.70 NMAC operating permit until such time that the EPA Administrator completes rulemakings that require such sources to obtain operating permits. In addition, sources that would be required to obtain an operating permit solely because they are subject to regulations or requirements under Section 112(r) of the federal Act are exempt from the requirement to obtain an Operating Permit.
* Any Acid Rain source as defined under title IV of the federal Act. The Acid Rain program has additional forms. See www.env.nm.gov/air-quality/air-quality-title-v-operating-permits-guidance-page/. Sources that are subject to both the Title V and Acid Rain regulations are encouraged to submit both applications simultaneously.
* Any source in a source category designated by the EPA Administrator ("Administrator"), in whole or in part, by regulation, after notice and comment.

19.1 - 40 CFR 64, Compliance Assurance Monitoring (CAM) (20.2.70.300.D.10.e NMAC)

Any source subject to 40CFR, Part 64 (Compliance Assurance Monitoring) must submit all the information required by section 64.7 with the operating permit application. The applicant must prepare a separate section of the application package for this purpose; if the information is already listed elsewhere in the application package, make reference to that location. Facilities not subject to Part 64 are invited to submit periodic monitoring protocols with the application to help the AQB to comply with 20.2.70 NMAC. Sources subject to 40 CFR Part 64, must submit a statement indicating your source's compliance status with any enhanced monitoring and compliance certification requirements of the federal Act.

Per the final Statement of Basis for NSR Permit 7746M9, there are no units subject to CAM.

19.2 - Compliance Status (20.2.70.300.D.10.a & 10.b NMAC)

Describe the facility's compliance status with each applicable requirement at the time this permit application is submitted. This statement should include descriptions of or references to all methods used for determining compliance. This statement should include descriptions of monitoring, recordkeeping and reporting requirements and test methods used to determine compliance with all applicable requirements. Refer to Section 2, Tables 2-N and 2-O of the Application Form as necessary. (20.2.70.300.D.11 NMAC) For facilities with existing Title V permits, refer to most recent Compliance Certification for existing requirements. Address new requirements such as CAM, here, including steps being taken to achieve compliance.

The facility is in compliance with applicable requirements.

19.3 - Continued Compliance (20.2.70.300.D.10.c NMAC)

Provide a statement that your facility will continue to be in compliance with requirements for which it is in compliance at the time of permit application. This statement must also include a commitment to comply with other applicable requirements as they come into effect during the permit term. This compliance must occur in a timely manner or be consistent with such schedule expressly required by the applicable requirement.

The facility will continue to comply with applicable regulations.

19.4 - Schedule for Submission of Compliance (20.2.70.300.D.10.d NMAC)

You must provide a proposed schedule for submission to the department of compliance certifications during the permit term. This certification must be submitted annually unless the applicable requirement or the department specifies a more frequent period. A sample form for these certifications will be attached to the permit.

ConocoPhillips would like the reporting schedule to coincide with the regular calendar year, with periods ending June 30 and December 31.

19.5 - Stratospheric Ozone and Climate Protection

In addition to completing the four (4) questions below, you must submit a statement indicating your source's compliance status with requirements of Title VI, Section 608 (National Recycling and Emissions Reduction Program) and Section 609 (Servicing of Motor Vehicle Air Conditioners).

---

1. Does your facility have any air conditioners or refrigeration equipment that uses CFCs, HCFCs or other ozone-depleting substances? ☑ **Yes** ☐ **No**

2. Does any air conditioner(s) or any piece(s) of refrigeration equipment contain a refrigeration charge greater than 50 lbs? ☐ **Yes** ☑ **No**

   (If the answer is yes, describe the type of equipment and how many units are at the facility.)

3. Do your facility personnel maintain, service, repair, or dispose of any motor vehicle air conditioners (MVACs) or appliances ("appliance" and "MVAC" as defined at 82. 152)? ☐ **Yes** ☑ **No**

4. Cite and describe which Title VI requirements are applicable to your facility (i.e. 40 CFR Part 82, Subpart A through G.)

The facility does not have any equipment with more than 50 pounds of refrigerant that is maintained by site personnel.

19.6 - Compliance Plan and Schedule

Applications for sources, which are not in compliance with all applicable requirements at the time the permit application is submitted to the department, must include a proposed compliance plan as part of the permit application package. This plan shall include the information requested below:

A. Description of Compliance Status: (20.2.70.300.D.11.a NMAC)
A narrative description of your facility's compliance status with respect to all applicable requirements (as defined in 20.2.70 NMAC) at the time this permit application is submitted to the department.

A narrative description of the means by which your facility will achieve compliance with applicable requirements with which it is not in compliance at the time you submit your permit application package.

C. Compliance schedule: (20.2.70.300D.11.c NMAC)
A schedule of remedial measures that you plan to take, including an enforceable sequence of actions with milestones, which will lead to compliance with all applicable requirements for your source. This schedule of compliance must be at least as stringent as that contained in any consent decree or administrative order to which your source is subject. The obligations of any consent decree or administrative order are not in any way diminished by the schedule of compliance.

D. Schedule of Certified Progress Reports: (20.2.70.300.D.11.d NMAC)
A proposed schedule for submission to the department of certified progress reports must also be included in the compliance schedule. The proposed schedule must call for these reports to be submitted at least every six (6) months.

E. Acid Rain Sources: (20.2.70.300.D.11.e NMAC)
If your source is an acid rain source as defined by EPA, the following applies to you. For the portion of your acid rain source subject to the acid rain provisions of title IV of the federal Act, the compliance plan must also include any additional requirements under the acid rain provisions of title IV of the federal Act. Some requirements of title IV regarding the schedule and methods the source will use to achieve compliance with the acid rain emissions limitations may supersede the requirements of title V and 20.2.70 NMAC. You will need to consult with the Air Quality Bureau permitting staff concerning how to properly meet this requirement.

NOTE: The Acid Rain program has additional forms. See www.env.nm.gov/air-quality/air-quality-title-v-operating-permits-guidance-page/. Sources that are subject to both the Title V and Acid Rain regulations are **encouraged** to submit both applications **simultaneously**.

Not applicable

19.7 - 112(r) Risk Management Plan (RMP)

Any major sources subject to section 112(r) of the Clean Air Act must list all substances that cause the source to be subject to section 112(r) in the application. The permittee must state when the RMP was submitted to and approved by EPA.

The facility does not store and regulated substances in excess of reporting thresholds.

19.8 - Distance to Other States, Bernalillo, Indian Tribes and Pueblos

Will the property on which the facility is proposed to be constructed or operated be closer than 80 km (50 miles) from other states, local pollution control programs, and Indian tribes and pueblos (20.2.70.402.A.2 and 20.2.70.7.B NMAC)?

(If the answer is yes, state which apply and provide the distances.)

Texas 2.4 km

19.9 - Responsible Official

Provide the Responsible Official as defined in 20.2.70.7.AD NMAC:

Carlos Blanco - See Section 1.H

Section 20

Other Relevant Information

Section 20

Other Relevant Information

Other relevant information. Use this attachment to clarify any part in the application that you think needs explaining. Reference the section, table, column, and/or field. Include any additional text, tables, calculations or clarifying information.

Additionally, the applicant may propose specific permit language for AQB consideration. In the case of a revision to an existing permit, the applicant should provide the old language and the new language in track changes format to highlight the proposed changes. If proposing language for a new facility or language for a new unit, submit the proposed operating condition(s), along with the associated monitoring, recordkeeping, and reporting conditions. In either case, please limit the proposed language to the affected portion of the permit.

There is no other relevant information.

Section 21

Addendum for Landfill Applications

Section 21

Addendum for Landfill Applications

Do not print this section unless this is a landfill application.

Landfill Applications are not required to complete Sections 1-C Input Capacity and Production Rate, 1-E Operating Schedule, 17 Compliance Test History, and 18 Streamline Applications. Section 12 – PSD Applicability is required only for Landfills with Gas Collection and Control Systems and/or landfills with other non-fugitive stationary sources of air emissions such as engines, turbines, boilers, heaters. All other Sections of the Universal Application Form are required.

EPA Background Information for MSW Landfill Air Quality Regulations: www.epa.gov/stationary-sources-air-pollution/clean-air-act-guidelines-and-standards-waste-management

NM Solid Waste Bureau Website: www.env.nm.gov/solid-waste/

This is not a landfill.

Section 22

Certification

Section 22: Certification

Company Name: _____

I, _____, hereby certify that the information and data submitted in this application are true and as accurate as possible, to the best of my knowledge and professional expertise and experience.

Signed this ____ day of_____, _2023_____, upon my oath or affirmation, before a notary of the State of _____.

_____ _____
*Signature Date

_____ _____
Printed Name Title

Scribed and sworn before me on this ____ day of _____, _____.

My authorization as a notary of the State of _____expires on the _____ day of _____, _____.

_____ _____
Notary's Signature Date

_____
Notary's Printed Name

*For Title V applications, the signature must be of the Responsible Official as defined in 20.2.70.7.AE NMAC.