Important User Information

Solid state equipment has operational characteristics differing from those of electromechanical equipment. Safety Guidelines for the Application, Installation and Maintenance of Solid State Controls (publication SGI-1.1 available from your local Rockwell Automation sales office or online at http://www.rockwellautomation.com/literature/) describes some important differences between solid state equipment and hard-wired electromechanical devices. Because of this difference, and also because of the wide variety of uses for solid state equipment, all persons responsible for applying this equipment must satisfy themselves that each intended application of this equipment is acceptable.

In no event will Rockwell Automation, Inc. be responsible or liable for indirect or consequential damages resulting from the use or application of this equipment.

The examples and diagrams in this manual are included solely for illustrative purposes. Because of the many variables and requirements associated with any particular installation, Rockwell Automation, Inc. cannot assume responsibility or liability for actual use based on the examples and diagrams.

No patent liability is assumed by Rockwell Automation, Inc. with respect to use of information, circuits, equipment, or software described in this manual.

Reproduction of the contents of this manual, in whole or in part, without written permission of Rockwell Automation, Inc., is prohibited.

Throughout this manual, when necessary, we use notes to make you aware of safety considerations.

	WARNING: Identifies information about practices or circumstances that can cause an explosion in a hazardous environment, which may lead to personal injury or death, property damage, or economic loss.
	ATTENTION: Identifies information about practices or circumstances that can lead to personal injury or death, property damage, or economic loss. Attentions help you identify a hazard, avoid a hazard, and recognize the consequence
	SHOCK HAZARD: Labels may be on or inside the equipment, for example, a drive or motor, to alert people that dangerous voltage may be present.
	BURN HAZARD: Labels may be on or inside the equipment, for example, a drive or motor, to alert people that surfaces may reach dangerous temperatures.
IMPORTANT	Identifies information that is critical for successful application and understanding of the product.

Rockwell Automation, Rockwell Software, Allen-Bradley, ArmorBlock, ArmorBlock Guard I/O, ArmorBlock MaXum, ArmorPoint, Compact I/O, CompactBlock I/O, CompactBlock Guard I/O, CompactLogix, ControlLogix, ControlLogix-XT, Data Highway Plus, DH+, DriveLogix, FactoryTalk, FLEX Ex, FLEX I/O, FLEX I/O-XT, FlexLogix, Guard I/O, GuardLogix, InView, MicroLogix, On-Machine, PanelView, PanelView 6, PanelView Plus, PLC-2, PLC-3, PLC-5, POINT I/O, POINT Guard I/O, PowerFlex, RSLinx, RSLinx Enterprise, RSLogix 5000, SCANport, SLC, SoftLogix, SynchLink, TechConnect are trademarks of Rockwell Automation, Inc.

Trademarks not belonging to Rockwell Automation are property of their respective companies

1756 ControlLogix Controllers

The ControlLogix controller provides a scalable controller solution that is capable of addressing a large amount of I/O points. The ControlLogix controller can be placed into any slot of a ControlLogix I/O chassis and multiple controllers can be installed in the same chassis.

ControlLogix controllers can monitor and control I/O across the ControlLogix backplane, as well as over network links. To provide communication for a ControlLogix controller, install the appropriate communication interface module into the chassis.

Features - Standard ControlLogix Controllers

Feature	1756-L61, 1756-L62, 1756-L63, 1756-L64, 1756-L65	1756-L72, 1756-L73, 1756-L74, 1756-L75
Controller tasks	• 32 tasks • 100 programs/task • Event tasks: all event triggers	
Built-in communication ports	1 port RS-232 serial	1 port USB
Communication options	• EtherNet/IP • ControlNet • DeviceNet • Data Highway Plus • Remote I/O • SynchLink • Third-party process and device networks	
Serial port communication	• ASCII • DF1 full/half-duplex • DF1 radio modem • DH-485 • Modbus via logic	—
Controller connections supported, max	250	500
Network connections, per network module	• 100 ControlNet (1756-CN2/A) • 40 ControlNet (1756-CNB) • 256 EtherNet/IP, 128 TCP (1756-EN2*x*) • 128 EtherNet/IP, 64 TCP (1756-ENBT)	
Controller redundancy	Full support	
Integrated motion	• SERCOS interface • Analog options (encoder input, LDT input, SSI input)	
Programming languages	• Relay ladder • Structured text • Function block • SFC	

IMPORTANT Scan time for a project loaded in a 1756-L64 or 1756-L65 controller may be slower than for the same project loaded in one of the other 1756-L6*x* controllers. See the Logix5000 Controllers Instruction Execution Time and Memory Use Reference Manual, publication 1756-RM087, for instruction execution times.

Technical Specifications - 1756-L6*x* ControlLogix Controllers

Attribute	1756-L61	1756-L62	1756-L63	1756-L64	1756-L65
User memory	2 MB	4 MB	8 MB	16 MB	32 MB
I/O memory	478 KB				
Optional nonvolatile memory storage	64 MB (cat. no. 1784-CF64) 128 MB (cat. no. 1784-CF128)				
Digital I/O, max	128,000				
Analog I/O, max	4000				
Total I/O, max	128,000				
Replacement battery[1]	Series A: 1756-BA1, 1756-BATM, 1756-BATA Series B: 1756-BA2	Series A: 1756-BA1, 1756-BATM, 1756-BATA Series B: 1756-BA2	Series A: 1756-BA1, 1756-BATM, 1756-BATA Series B: 1756-BA2	1756-BA2	
Current draw @ 5.1V DC	1200 mA				
Current draw @ 24V DC	14 mA				
Power dissipation	3.5 W				
Thermal dissipation	11.9 BTU/hr				
Isolation voltage	30V (continuous), basic insulation type, RS-232 to system Controllers tested to withstand 720V DC for 60 s				
Serial cables	1756-CP3 or 1747-CP3, right angle connector to controller, straight to serial port, 3 m (9.84 ft)				
Weight, approx.	Series A: 0.32 kg Series B: 0.35 kg (Series A: 0.71 lb Series B: 0.78 lb)	Series A: 0.32 kg Series B: 0.35 kg (Series A: 0.71 lb Series B: 0.78 lb)	Series A: 0.32 kg Series B: 0.35 kg (Series A: 0.71 lb Series B: 0.78 lb)	Series A: 0.32 kg Series B: 0.35 kg (Series A: 0.71 lb Series B: 0.78 lb)	Series A: 0.32 kg Series B: 0.35 kg (Series A: 0.71 lb Series B: 0.78 lb)
Slot width	1				
Module location	Chassis-based, any slot				
Chassis	1756-A4, 1756-A7, 1756-A10, 1756-A13, 1756-A17				
Power supply, standard	1756-PA72/C, 1756-PA75/B, 1756-PB72/C, 1756-PB75/B, 1756-PC75/B, 1756-PH75/B				
Power supply, redundant	1756-PA75R, 1756-PB75R, 1756-PSCA2				
Wire category	2 - on communication ports[2]				
North American temperature code	T4A				
IEC temperature code	T4				
Enclosure type rating	None (open-style)				

(1) For Australian Mining certification applications, only Series A and a 1756-BA1 battery can be used. For more information, contact your local distributor or sales office.

(2) Use this conductor category information for planning conductor routing as described in the system level installation manual. See the Industrial Automation Wiring and Grounding Guidelines, publication 1770-4.1.

Environmental Specifications - 1756-L6*x* ControlLogix Controllers

Attribute	1756-L61, 1756-L62, 1756-L63, 1756-L64, 1756-L65
Temperature, operating IEC 60068-2-1 (Test Ad, Operating Cold), IEC 60068-2-2 (Test Bd, Operating Dry Heat), IEC 60068-2-14 (Test Nb, Operating Thermal Shock)	0...60 °C (32...140 °F)
Temperature, storage IEC 60068-2-1 (Test Ab, Unpackaged Nonoperating Cold), IEC 60068-2-2 (Test Bb, Unpackaged Nonoperating Dry Heat), IEC 60068-2-14 (Test Na, Unpackaged Nonoperating Thermal Shock)	-40...85 °C (-40...185 °F)
Relative humidity IEC 60068-2-30 (Test Db, Unpackaged Damp Heat)	5...95% noncondensing
Vibration IEC 60068-2-6 (Test Fc, Operating)	2 g @ 10...500 Hz
Shock, operating IEC 60068-2-27 (Test Ea, Unpackaged Shock)	30 g
Shock, nonoperating IEC 60068-2-27 (Test Ea, Unpackaged Shock)	50 g
Emissions CISPR 11	Group 1, Class A
ESD immunity IEC 61000-4-2	6 kV contact discharges 8 kV air discharges
Radiated RF immunity IEC 61000-4-3	10V/m with 1 kHz sine-wave 80% AM from 80...2000 MHz 10V/m with 200 Hz 50% Pulse 100% AM @ 900 MHz 10V/m with 200 Hz 50% Pulse 100% AM @ 1890 MHz 3V/m with 1 kHz sine-wave 80% AM from 2000...2700 MHz
EFT/B immunity IEC 61000-4-4	±4 kV at 5 kHz on communication ports
Surge transient immunity IEC 61000-4-5	±2 kV line-earth (CM) on communication ports
Conducted RF immunity IEC 61000-4-6	10Vrms with 1 kHz sine-wave 80% AM from 150 kHz...80 MHz

Certifications - 1756-L6*x* ControlLogix Controllers

Certification[1]	1756-L61, 1756-L62, 1756-L63, 1756-L64, 1756-L65
c-UL-us	UL Listed Industrial Control Equipment, certified for US and Canada. See UL File E65584. UL Listed for Class I, Division 2 Group A,B,C,D Hazardous Locations, certified for U.S. and Canada. See UL File E194810.
CSA	CSA Certified Process Control Equipment. See CSA File LR54689C. CSA Certified Process Control Equipment for Class I, Division 2 Group A,B,C,D Hazardous Locations. See CSA File LR69960C.
CE	European Union 2004/108/EC EMC Directive, compliant with: • EN 61326-1, Meas./Control/Lab., Industrial Requirements • EN 61000-6-2, Industrial Immunity • EN 61000-6-4, Industrial Emissions • EN 61131-2, Programmable Controllers (Clause 8, Zone A & B)
C-Tick	Australian Radiocommunications Act, compliant with: AS/NZS CISPR 11, Industrial Emissions
Ex	European Union 94/9/EC ATEX Directive, compliant with: • EN 60079-15, Potentially Explosive Atmospheres, Protection "n" (Zone 2) • EN60079-0, General Requirements • II 3 G Ex nA IIC T4 X **Important:** The 1756-L64 and 1756-L65 controllers do not have this certification.
FM	FM Approved Equipment for use in Class I Division 2 Group A,B,C,D Hazardous Locations
Functional safety[2]	Certified by TÜV. Capable of SIL2. **Important:** This certification applies only to the 1756-L61, 1756-L62, and 1756-L63 controllers.

(1) When marked. See the Product Certification link at http://www.ab.com for Declarations of Conformity, Certificates, and other certification details.

(2) When used with specified firmware revisions.

Technical Specifications - 1756-L7*x* ControlLogix Controllers

Attribute	1756-L72	1756-L73	1756-L74	1756-L75
User memory	4 MB	8 MB	16 MB	32 MB
I/O memory	0 98 MB			
Optional nonvolatile memory storage	1 GB (cat no 1784-SD1) 2 GB (cat no 1784-SD2)			
Digital I/O, max	128,000			
Analog I/O, max	4000			
Total I/O, max	128,000			
Energy storage module	1756-ESMCAP capacitor-based energy-storage module 1756-ESMNSE energy-storage module without stored energy 1756-ESMNRM energy-storage module that secures the controller by preventing the USB connection and Secure Digital card use			
Current draw @ 1 2V DC	5 mA			
Current draw @ 5 1V DC	800 mA			
Power dissipation	2 5 W			
Thermal dissipation	8 5 BTU/hr			
Isolation voltage	30V (continuous), basic insulation type, USB port-to-system Type tested at 500V AC for 60 s			
USB port	USB 2 0, full speed (12 Mbps)			
USB cable	Samtec cable, P/N RSP-199350			
Weight, approx	0 25 kg (0 55 lb)			
Slot width	1			
Module location	Chassis-based, any slot			
Chassis	1756-A4, 1756-A7, 1756-A10, 1756-A13, 1756-A17			
Power supply, standard	1756-PA72/C, 1756-PA75/B, 1756-PB72/C, 1756-PB75/B, 1756-PC75/B, 1756-PH75/B			
Power supply, redundant	1756-PA75R, 1756-PB75R, 1756-PSCA2			
Wire category	3 - on USB port[1]			
North American temperature code	T5			
IEC temperature code	T5			
Enclosure type rating	None (open-style)			

(1) Use this conductor category information for planning conductor routing as described in the system level installation manual See the Industrial Automation Wiring and Grounding Guidelines, publication 1770-4 1.

Environmental Specifications - 1756-L7*x* ControlLogix Controllers

Attribute	1756-L72, 1756-L73, 1756-L74, 1756-L75
Temperature, operating IEC 60068-2-1 (Test Ad, Operating Cold), IEC 60068-2-2 (Test Bd, Operating Dry Heat), IEC 60068-2-14 (Test Nb, Operating Thermal Shock)	0...60 °C (32...140 °F)
Temperature, storage IEC 60068-2-1 (Test Ab, Unpackaged Nonoperating Cold), IEC 60068-2-2 (Test Bb, Unpackaged Nonoperating Dry Heat), IEC 60068-2-14 (Test Na, Unpackaged Nonoperating Thermal Shock)	-40...85 °C (-40...185 °F)
Relative humidity IEC 60068-2-30 (Test Db, Unpackaged Damp Heat)	5...95% noncondensing
Vibration IEC 60068-2-6 (Test Fc, Operating)	2 g @ 10...500 Hz
Shock, operating IEC 60068-2-27 (Test Ea, Unpackaged Shock)	30 g
Shock, nonoperating IEC 60068-2-27 (Test Ea, Unpackaged Shock)	50 g (45 g with SD card installed)
Emissions CISPR 11	Group 1, Class A
ESD immunity IEC 61000-4-2	6 kV contact discharges 8 kV air discharges
Radiated RF immunity IEC 61000-4-3	10V/m with 1 kHz sine-wave 80% AM from 80...2000 MHz 10V/m with 200 Hz 50% Pulse 100% AM @ 900 MHz 10V/m with 200 Hz 50% Pulse 100% AM @ 1890 MHz 3V/m with 1 kHz sine-wave 80% AM from 2000...2700 MHz

Certifications - 1756-L7*x* ControlLogix Controllers

Certification[1]	1756-L72, 1756-L73, 1756-L74, 1756-L75
c-UL-us	UL Listed Industrial Control Equipment, certified for US and Canada. See UL File E65584. UL Listed for Class I, Division 2 Group A,B,C,D Hazardous Locations, certified for U.S. and Canada. See UL File E194810.
CE	European Union 2004/108/EC EMC Directive, compliant with: • EN 61326-1, Meas./Control/Lab., Industrial Requirements • EN 61000-6-2, Industrial Immunity • EN 61000-6-4, Industrial Emissions • EN 61131-2, Programmable Controllers (Clause 8, Zone A & B)
C-Tick	Australian Radiocommunications Act, compliant with: AS/NZS CISPR 11, Industrial Emissions
Ex	European Union 94/9/EC ATEX Directive, compliant with: • EN 60079-15, Potentially Explosive Atmospheres, Protection 'n' • EN 60079-0, General Requirements • II 3 G Ex nA IIC T5X

(1) When marked. See the Product Certification link at http://www.ab.com for Declarations of Conformity, Certificates, and other certification details.

1756 GuardLogix Controllers

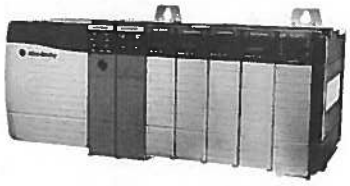

A GuardLogix controller is a ControlLogix controller that also provides safety control. The GuardLogix system is a dual controller solution—you must use a 1756-L6xS primary controller and a 1756-LSP safety partner to achieve SIL 3/CAT. 4. A major benefit of this system is that it's still a single project, safety and standard together. The safety partner controller is a part of the system, is automatically configured, and requires no user setup.

During development, safety and standard have the same rules, multiple programmers, online editing, and forcing are all allowed. Once the project is tested and ready for final validation, you set the Safety Task to a SIL 3 integrity level, which is then enforced by the GuardLogix controller. When safety memory is locked and protected, the safety logic can't be modified and all safety functions operate with SIL 3 integrity. On the standard side of the GuardLogix controller, all functions operate like a regular Logix controller. Thus online editing, forcing, and other activities are all allowed.

With this level of integration, safety memory can be read by standard logic and external devices, like HMIs or other controllers, eliminating the need to condition safety memory for use elsewhere. The result is easy system-wide integration and the ability to display safety status on displays or marquees. Use Guard I/O modules for field device connectivity on Ethernet or DeviceNet networks, and for safety interlocking between GuardLogix controllers use Ethernet or ControlNet networks. Multiple GuardLogix controllers can share safety data for zone to zone interlocking, or a single GuardLogix controller can use remote distributed safety I/O between different cells/areas.

In addition to the standard features of a ControlLogix controller, the GuardLogix controller has these safety-related features.

Features - GuardLogix Controllers

Feature	1756-L61S, 1756-L62S, 1756-L63S, 1756-LSP
Safety communication options	Standard and safety • EtherNet/IP • ControlNet • DeviceNet
Network connections, per network module	• 100 ControlNet (1756-CN2/A) • 40 ControlNet (1756-CNB) • 256 EtherNet/IP; 128 TCP (1756-EN2x) • 128 EtherNet/IP; 64 TCP (1756-ENBT)
Controller redundancy	Not supported
Programming languages	Relay ladder

Technical Specifications - 1756 GuardLogix Controllers

Attribute	1756-L61S	1756-L62S	1756-L63S	1756-LSP
User memory	2 MB	4 MB	8 MB	—
Safety memory	1 MB	1 MB	3.75 MB	—
I/O memory	478 KB			—
Optional flash memory[1]	64 MB (cat. no. 1784-CF64) 128 MB (cat. no. 1784-CF128)			—
Digital I/O, max	128,000			—
Analog I/O, max	4000			—
Total I/O, max	128,000			—
Replacement battery	1756-BA2			
Current draw @ 5.1V DC	1200 mA			
Current draw @ 24V DC	14 mA			
Power dissipation	3.5 W			
Thermal dissipation	11.9 BTU/hr			
Isolation voltage	30V (continuous), Basic Insulation Type, RS-232 to system Type tested at 720V DC for 60 s			
Serial cables	1756-CP3 or 1747-CP3, right angle connector to controller, straight to serial port, 3 m (9.84 ft)			
Weight, approx.	0.32 kg (0.70 lb)			
Slot width	1			
Module location	Chassis-based, any slot			
Chassis	1756-A4, 1756-A7, 1756-A10, 1756-A13, 1756-A17			
Power supply, standard	1756-PA72/C, 1756-PA75/B, 1756-PB72/C, 1756-PB75/B, 1756-PC75/B, 1756-PH75/B			
Power supply, redundant	1756-PA75R, 1756-PB75R, 1756-PSCA2			
Wire category	2 - on communication ports[2]			
North American temperature code	T4A			
Enclosure type rating	None (open-style)			

(1) The GuardLogix controller does not support user program storage or retrieval by using a CompactFlash card.

(2) Use this conductor category information for planning conductor routing as described in the system level installation manual. See the Industrial Automation Wiring and Grounding Guidelines, publication 1770-4.1.

Environmental Specifications - 1756 GuardLogix Controllers

Attribute	1756-L61S, 1756-L62S, 1756-L63S, 1756-LSP
Temperature, operating IEC 60068-2-1 (Test Ad, Operating Cold), IEC 60068-2-2 (Test Bd, Operating Dry Heat), IEC 60068-2-14 (Test Nb, Operating Thermal Shock)	0...60 °C (32...140 °F)
Temperature, storage IEC 60068-2-1 (Test Ab, Unpackaged Nonoperating Cold), IEC 60068-2-2 (Test Bb, Unpackaged Nonoperating Dry Heat), IEC 60068-2-14 (Test Na, Unpackaged Nonoperating Thermal Shock)	-40...85 °C (-40...185 °F)
Relative humidity IEC 60068-2-30 (Test Db, Unpackaged Damp Heat)	5...95% noncondensing
Vibration IEC 60068-2-6 (Test Fc, Operating)	2 g @ 10...500 Hz
Shock, operating IEC 60068-2-27 (Test Ea, Unpackaged Shock)	30 g
Shock, nonoperating IEC 60068-2-27 (Test Ea, Unpackaged Shock)	50 g
Emissions CISPR 11	Group 1, Class A
ESD immunity IEC 61000-4-2	6kV contact discharges 8kV air discharges
Radiated RF immunity IEC 61000-4-3	10V/m with 1 kHz sine-wave 80% AM from 80...2000 MHz 10V/m with 200 Hz 50% Pulse 100% AM @ 900 MHz 10V/m with 200 Hz 50% Pulse 100% AM @ 1890 MHz 3V/m with 1 kHz sine-wave 80% AM from 2000...2700 MHz
EFT/B immunity IEC 61000-4-4	±4 kV at 5 kHz on communication ports
Surge transient immunity IEC 61000-4-5	±2 kV line-earth (CM) on communication ports
Conducted RF immunity IEC 61000-4-6	10Vrms with 1 kHz sine-wave 80% AM from 150 kHz...80 MHz

Certifications - 1756 GuardLogix Controllers

Certification[1]	1756-L61S, 1756-L62S, 1756-L63S, 1756-LSP
c-UL-us	UL Listed Industrial Control Equipment, certified for US and Canada. See UL File E65584. UL Listed for Class I, Division 2 Group A,B,C,D Hazardous Locations, certified for U.S. and Canada. See UL File E194810.
CSA	CSA Certified Process Control Equipment. See CSA File LR54689C. CSA Certified Process Control Equipment for Class I, Division 2 Group A,B,C,D Hazardous Locations. See CSA File LR69960C.
CE	European Union 2004/108/EC EMC Directive, compliant with: • EN 61000-6-4, Industrial Emissions • EN 61326-1; Meas./Control/Lab., Industrial Requirements • EN 61000-6-2; Industrial Immunity • EN 61131-2; Programmable Controllers (Clause 8, Zone A & B)
C-Tick	Australian Radiocommunications Act, compliant with: AS/NZS CISPR 11, Industrial Emissions
FM	FM Approved Equipment for use in Class I, Division 2 Group A, B, C, D Hazardous Locations
Functional Safety[2]	Certified by TÜV, capable of SIL 3, according to IEC 61508; and PLe/Cat. 4 according to ISO 13849-1:2006. Certified by UL, capable of SIL 3, see UL File E256621.

(1) When marked. See the Product Certification link at http://www.ab.com for Declarations of Conformity, Certificates, and other certification details.

(2) When used with specified firmware revision.

1756 ControlLogix-XT Controllers

The ControlLogix-XT controllers function in the same way as the traditional ControlLogix controllers. The ControlLogix-XT products include control and communication system components that are conformally coated to extend product life in harsh, corrosive environments.

- When used with FLEX I/O-XT products, the ControlLogix-XT system can withstand temperatures range from -20...70 °C (-4...158 °F).
- When used independently, the ControlLogix-XT system can withstand temperature ranges from -25...70 °C (-13...158 °F).

Technical Specifications - 1756-L63XT Controller

Attribute	1756-L63XT
User memory	8 MB
I/O memory	478 KB
Optional flash memory	64 MB (cat. no. 1784-CF64) 128 MB (cat. no. 1784-CF128)
Digital I/O, max	128,000
Analog I/O, max	4000
Total I/O, max	128,000
Replacement battery	1756-BA2
Current draw @ 5.1V DC	1200 mA
Current draw @ 24V DC	14 mA
Power dissipation	3.5 W
Thermal dissipation	11.9 BTU/hr
Isolation voltage	30V (continuous), basic insulation type, RS-232 to system Type tested at 720V DC for 60 s
Serial cables	1756-CP3 or 1747-CP3, right angle connector to controller, straight to serial port, 3 m (9.84 ft)
Weight, approx	0.35 kg (0.78 lb)
Slot width	1
Module location	Chassis-based, any slot
Chassis	1756-A5XT, 1756-A7LXT
Power supply, standard	1756-PBXT
Power supply, redundant	None
Wire category	2 - on communication ports[1]
North American temperature code	T4A
IEC temperature code	T4
Enclosure type rating	None (open-style)

(1) Use this conductor category information for planning conductor routing as described in the system level installation manual. See the Industrial Automation Wiring and Grounding Guidelines, publication 1770-4.1.

Environmental Specifications - 1756-L63XT and 1756-L73XT Controller

Attribute	1756-L63XT
Temperature, operating IEC 60068-2-1 (Test Ad, Operating Cold), IEC 60068-2-2 (Test Bd, Operating Dry Heat), IEC 60068-2-14 (Test Nb, Operating Thermal Shock)	-25...70 °C (-13...158 °F)
Temperature, storage IEC 60068-2-1 (Test Ab, Unpackaged Nonoperating Cold), IEC 60068-2-2 (Test Bb, Unpackaged Nonoperating Dry Heat), IEC 60068-2-14 (Test Na, Unpackaged Nonoperating Thermal Shock)	-40...85 °C (-40...185 °F)
Relative humidity IEC 60068-2-30 (Test Db, Unpackaged Damp Heat)	5...95% noncondensing
Vibration IEC 60068-2-6 (Test Fc, Operating)	2 g @ 10...500 Hz
Shock, operating IEC 60068-2-27 (Test Ea, Unpackaged Shock)	30 g
Shock, nonoperating IEC 60068-2-27 (Test Ea, Unpackaged Shock)	50 g
Emissions CISPR 11	Group 1, Class A
ESD immunity IEC 61000-4-2	6 kV contact discharges 8 kV air discharges
Radiated RF immunity IEC 61000-4-3	10V/m with 1 kHz sine-wave 80% AM from 80...2000 MHz 10V/m with 200 Hz 50% Pulse 100% AM @ 900 MHz 10V/m with 200 Hz 50% Pulse 100% AM @ 1890 MHz 3V/m with 1 kHz sine-wave 80% AM from 2000...2700 MHz
EFT/B immunity IEC 61000-4-4	±4 kV at 5 kHz on communication ports
Surge transient immunity IEC 61000-4-5	±2 kV line-earth (CM) on communication ports
Conducted RF immunity IEC 61000-4-6	10Vrms with 1 kHz sine-wave 80% AM from 150 kHz...80 MHz

Certifications - 1756-L63XT Controller

Certification[1]	1756-L63XT
c-UL-us	UL Listed Industrial Control Equipment, certified for US and Canada. See UL File E65584. UL Listed for Class I, Division 2 Group A,B,C,D Hazardous Locations, certified for U.S. and Canada. See UL File E194810.
CE	European Union 2004/108/EC EMC Directive, compliant with: • EN 61000-6-4, Industrial Emissions • EN 61326-1, Meas./Control/Lab., Industrial Requirements • EN 61000-6-2, Industrial Immunity • EN 61131-2, Programmable Controllers (Clause 8, Zone A & B)
C-Tick	Australian Radiocommunications Act, compliant with: AS/NZS CISPR 11, Industrial Emissions
Ex	European Union 94/9/EC ATEX Directive, compliant with: • EN 60079-15, Potentially Explosive Atmospheres, Protection 'n' • EN 60079-0, General Requirements • II 3 G Ex nA IIC T4 X
Functional safety[2]	Certified by TÜV. Capable of SIL 2

(1) When marked. See the Product Certification link at http://www.ab.com for Declarations of Conformity, Certificates, and other certification details.

(2) When used with specified firmware revisions.

Controller Memory Use

The following equations provide a rough memory estimate.

Controller tasks	_____ x 4000	=	_____ bytes (minimum 1 task)
Digital I/O points	_____ x 400	=	_____ bytes
Analog I/O points	_____ x 2600	=	_____ bytes
DeviceNet modules[1]	_____ x 7400	=	_____ bytes
Other communication modules[2]	_____ x 2000	=	_____ bytes
Motion axis	_____ x 8000	=	_____ bytes
FactoryTalk alarm instruction	_____ x 1000	=	_____ bytes (per alarm)
FactoryTalk subscriber	_____ x 10000	=	_____ bytes

(1) The first DeviceNet module is 7400 bytes. Additional DeviceNet modules are 5800 bytes each.

(2) Count all the communication modules in the system, not just those in the local chassis. This includes device connection modules, adapter modules, and ports on PanelView terminals.

For redundant controller systems, double the memory estimate you calculate. For example, if you estimate you need 2 MB of memory, select a controller with 4 MB of memory.

Reserve 20...30% of the controller memory to accommodate growth.

Controller Compatibility

Control Distributed I/O Modules

The controller can control these distributed I/O modules via the I/O Configuration tree in RSLogix 5000 programming software.

I/O Modules	EtherNet/IP	ControlNet	DeviceNet	Remote I/O
Chassis-based I/O				
1746 SLC I/O	No	No	No	Yes
1756 ControlLogix I/O	Yes	Yes	No	No
1769 Compact I/O	No	No	Yes	No
1771 Universal I/O	No	Yes	No	Yes
In-cabinet I/O				
1734 POINT I/O	Yes	Yes	Yes	No
1734D POINTBlock I/O	No	No	Yes	No
1790, 1790D, 1790P CompactBlock LDX I/O	No	No	Yes	No
1791D, 1791P, 1791R CompactBlock I/O	No	No	Yes	No
1794 FLEX I/O	Yes	Yes	Yes	Yes
1797 FLEX Ex I/O	No	Yes	No	No
On-machine I/O				
1732 ArmorBlock I/O	Yes	No	Yes	No
1738 ArmorPoint I/O	Yes	Yes	Yes	No
1792D ArmorBlock MaXum I/O	No	No	Yes	No
1799 Embedded I/O	No	No	Yes	No

Control Safety I/O Modules

The GuardLogix controller can control these safety I/O modules in a safety system.

I/O Modules	EtherNet/IP	ControlNet	DeviceNet
In-cabinet I/O			
1791DS CompactBlock Guard I/O	No	No	Yes
1791ES CompactBlock Guard I/O	Yes	No	No
1734 POINT Guard I/O	Yes	No	No
On-machine I/O			
1732DS ArmorBlock Guard I/O	No	No	Yes

Communicate with Display Devices

The controller can communicate with these display devices.

Display Devices	EtherNet/IP	ControlNet	DeviceNet	DH+	Remote I/O	RS-232 (DF1)	DH-485
Industrial Computers							
Rockwell Automation industrial computers (all)[1]	Yes	Yes	Yes	Yes	Yes	Yes	Yes
Graphic Terminals							
PanelView Plus and PanelView CE terminals	Yes	Yes	Yes	Yes	Yes	Yes	Yes
PanelView Standard terminals	Yes	Yes	Yes	Yes	Yes	Yes	Yes
PanelView 'e' terminals	No	Yes	No	Yes	Yes	No	No
Message Displays							
InView message displays	Yes	Yes	Yes	Yes	Yes	Yes	Yes

(1) Includes Rockwell Automation integrated display rotating media (HDD) and solid state (SSD) computers, Rockwell Automation non-display computers, and Rockwell Automation integrated display computers with keypad.

Communicate with Other Controllers

The controller can communicate with these programmable controllers.

Controller	EtherNet/IP	ControlNet	DeviceNet	DH+	RS-232 (DF1)	DH-485[1]
1756 ControlLogix 1756 GuardLogix	Yes	Yes	Yes	Yes	Yes	Yes
1768, 1769 CompactLogix 1768 Compact GuardLogix	Yes	Yes	Yes	No	Yes	Yes
1789 SoftLogix5800	Yes	Yes	Yes	No	Yes	No
1794 FlexLogix	Yes	Yes	Yes	No	Yes	Yes
PowerFlex with DriveLogix	Yes	Yes	Yes	No	Yes	Yes
1785 PLC-5	Yes[2] [3]	Yes	Yes[4]	Yes	Yes	—
1747 SLC	Yes[5]	Yes	Yes[4]	Yes	Yes	Yes
1761 MicroLogix	Yes	No	Yes[4]	No	Yes	Yes
1762 MicroLogix	Yes	No	Yes[4]	No	Yes	Yes
1763 MicroLogix	Yes	No	Yes[4]	No	Yes	Yes
1764 MicroLogix	Yes	No	Yes[4]	No	Yes	Yes
1772 PLC-2	—	—	—	Yes	Yes	—
1775 PLC-3	—	—	—	Yes	Yes	—
5250 PLC-5/250	—	—	No	Yes	Yes	—

(1) The 1756-DH485 module supports full DH-485 functionality.

(2) The Ethernet PLC-5 controller must be series C, firmware revision N 1 or later; series D, firmware revision E 1 or later, or series E, firmware revision D 1 or later.

(3) The 1785-ENET Ethernet communication interface module must be series A, firmware revision D or later.

(4) The PLC-5, SLC, and MicroLogix processors appear as I/O points to the Logix controller. Use the appropriate DeviceNet interface for the controller.

(5) Use a 1747-L55*x* controller with OS501 or later.

Communicate with Other Communication Devices

The controller can communicate with these communication devices.

Communication Device	EtherNet/IP	ControlNet	DeviceNet	DH+
Linking device (ControlLogix controllers only)	1788-EN2DN	1788-CN2DN 1788-CN2FF	1788-EN2DN 1788-CN2DN	—
PCMCIA card	—	1784-PCC	1784-PCD	1784-PCMK
PCI card	—	1784-PCIC 1784-PCICS	1784-PCID 1784-PCIDS 1784-CPCIDS	—
Drives SCANport module	—	1203-FM1 1203-FB1[1]	—	—
Communication module	—	1203-CN[2] 1770-KFC15 1770-KFCD15 1747-KFC15	1770-KFD 1770-KFG	—
Communication card	—	1784-PKTCS 1784-KTCS 1784-KTCX15	1784-PKTX 1784-PKTXD	—
USB communication device	—	1784-U2CN	1784-U2DN	1784-U2DHP

(1) Use a CIP generic MSG instruction to communicate with the 1203-FM1 SCANport module on a DIN rail that is remote to the controller. The remote DIN rail also requires a 1794-ACN15 or 1794-ACNR15 ControlNet adapter module.

(2) Use the generic module configuration to configure the 1203-CN1 module and a CIP generic MSG instruction to communicate with the module.

ControlLogix Redundancy

The ControlLogix controller supports controller redundancy. In a redundant controller system, you need these components:

- Two 1756 chassis, each with the same of the following:
  - Number of slots
  - Modules in the same slots
  - Redundancy firmware revisions in each module
  - Two additional ControlNet nodes outside the redundant chassis pair if the application uses ControlNet networks
- One 1756-RM or 1756-RMXT module per chassis that is connected by a 1756-RMC*x* cable
- One or two 1756-L6x or 1756-L7x controllers in each chassis
- Up to seven **enhanced** ControlNet communication modules, that is, 1756-CN2/B, 1756-CN2R/B, 1756-CN2RXT modules
- Up to seven **enhanced** EtherNet/IP communication modules, that is, 1756-EN2T, 1756-EN2TR, or 1756-EN2TXT modules

Technical Specifications - 1756 Redundancy Modules

Attribute	1756-RM	1756-RMXT
Current draw @ 1.2V DC	4 mA	
Current draw @ 5.1V DC	1.2 A	
Current draw @ 24V DC	120 mA	
Power dissipation	9.0 W	
Thermal dissipation	31 BTU/hr	
Connector cables	1756-RMC1, 1 m (3.28 ft) 1756-RMC3, 3 m (9.84 ft) 1756-RMC10, 10 m (32.81 ft)	
Slot width	1 slot	
Module location	Chassis-based, any slot	
Chassis	1756-A4, 1756-A7, 1756-A10, 1756-A13, 1756-A17	1756-A4LXT, 1756-A5LXT, 1756-A7LXT
Power supply, standard	1756-PA72/C, 1756-PA75/B, 1756-PB72/C, 1756-PB75/B, 1756-PC75/B, 1756-PH75/B	1756-PBXT
Power supply, redundant	1756-PA75R, 1756-PB75R, 1756-PSCA2	None
North American temperature code	T4	
IEC temperature code	T4	
Enclosure type	None (open-style)	
Weight	0.293 kg (0.64 lb)	
Mounting	ControlLogix-XT chassis, single-slot module	

Environmental Specifications - 1756 Redundancy Module

Attribute	1756-RM	1756-RMXT
Temperature, operating IEC 60068-2-1 (Test Ad, Operating Cold), IEC 60068-2-2 (Test Bd, Operating Dry Heat), IEC 60068-2-14 (Test Nb, Operating Thermal Shock)	0...60 °C (32...140 °F)	-25.. 70 °C (-13...158 °F)
Temperature, storage IEC 60068-2-1 (Test Ab, Unpackaged Nonoperating Cold), IEC 60068-2-2 (Test Bb, Unpackaged Nonoperating Dry Heat), IEC 60068-2-14 (Test Na, Unpackaged Nonoperating Thermal Shock)	-40...85 °C (-40...185 °F)	
Relative humidity IEC 60068-2-30 (Test Db, Unpackaged Damp Heat)	5...95% noncondensing	
Vibration IEC 60068-2-6 (Test Fc, Operating)	2 g @ 10...500 Hz	
Shock, operating IEC 60068-2-27 (Test Ea, Unpackaged Shock)	30 g	
Shock, nonoperating IEC 60068-2-27 (Test Ea, Unpackaged Shock)	50 g	
Emissions CISPR 11	Group 1, Class A	
ESD immunity IEC 61000-4-2	6 kV contact discharges 8 kV air discharges	
Radiated RF immunity IEC 61000-4-3	10V/m with 1 kHz sine-wave 80% AM from 80...2000 MHz 10V/m with 200 Hz 50% Pulse 100% AM @ 900 MHz 10V/m with 200 Hz 50% Pulse 100% AM @ 1890 MHz 3V/m with 1 kHz sine-wave 80% AM from 2000...2700 MHz	

Certifications - 1756 Redundancy Module

Certification[1]	1756-RM	1756-RMXT
CSA	CSA Certified Process Control Equipment. See CSA File LR54689C CSA Certified Process Control Equipment for Class I, Division 2 Group A,B,C,D Hazardous Locations. See CSA File LR69960C	—
CE	European Union 2004/108/IEC EMC Directive, compliant with: • EN 61326-1, Meas./Control/Lab., Industrial Requirements • EN 61000-6-2, Industrial Immunity • EN 61000-6-4, Industrial Emissions • EN 61131-2, Programmable Controllers (Clause 8, Zone A & B)	
C-Tick	Australian Radiocommunications Act, compliant with: AS/NZS CISPR 11, Industrial Emissions	
c-UL-us	UL Listed Industrial Control Equipment, certified for U.S. and Canada. See UL file E65584 UL Listed for Class I, Division 2 Group A,B,C,D Hazardous Locations, certified for U.S. and Canada. See UL File E194810	
Ex	European Union 94/9/EC ATEX Directive, compliant with: • EN 60079-15, Potentially Explosive Atmospheres, Protection "n" • EN 60079-0, General Requirements • II 3 G Ex nA IIC T4 X	
FM	FM Approved Equipment for use in Class I Division 2 Group A,B,C,D Hazardous Locations	—
Functional safety[2]	Certified by TÜV. Capable of SIL 2	

(1) When marked. See the Product Certification link at http://www.ab.com for Declarations of Conformity, Certificates, and other certification details.

(2) When used with specified firmware revisions.

ControlLogix Connections

A ControlLogix system uses connections to establish communication links between devices. The types of connections include the following:

- Controller-to-local I/O modules or local communication modules
- Controller-to-remote I/O or remote communication modules
- Controller-to-remote I/O (rack-optimized) modules
- Produced and consumed tags
- Messages
- Controller access by RSLogix 5000 programming software
- Controller access by RSLinx software for HMI or other applications

You indirectly determine the number of connections the controller uses by configuring the controller to communicate with other devices in the system. The limit of connections may ultimately reside in the communication module you use for the connection. If a message path routes through a communication module, the connection related to the message also counts towards the connection limit of that communication module.

The 1756-L6*x* controller supports 250 connections; the 1756-L7*x* controller supports 500. To calculate the total connections for a controller, consider the connections to local I/O modules and the connections to remote modules. Use this table to tally local connections.

Connection Type	Device Quantity	Connections per Device	Total Connections
Local I/O module (always a direct connection)		1	
1756-M16SE, 1756-M08SE, 1756-M03SE SERCOS motion module 1756-M02AE, 1756-M02AS, 1756-HYD02 analog motion module		3	
1756-CN2, 1756-CN2R communication module 1756-CNB, 1756-CNBR communication module 1756-CN2RXT communication module		0	
1756-EN2F, 1756-EN2T communication module 1756-ENBT, 1756-EWEB communication module 1756-EN2TXT communication module		0	
1756-DNB communication module		2	
1756-DHRIO communication module 1756-RIO communication module 1756-DHRIOXT communication module		1	
1756-DH485 communication module		1	
Total			

Regardless of how you configure local I/O modules (rack-optimized or direct connect), the controller establishes a direct connection for each local I/O module.

Remote connections depend on the communication module. The number of connections the module supports determines how many connections the controller can access through that module. Use this table to tally **remote** connections for the controller.

Connection Type	Device Quantity	Connections per Device	Total Connections
Remote ControlNet communication module Configured as a direct (none) connection Configured as a rack-optimized connection		0 **or** 1	
Remote I/O module over a ControlNet network (direct connection)		1	
Remote Ethernet communication module Configured as a direct (none) connection Configured as a rack-optimized connection		0 **or** 1	
Remote I/O module over an EtherNet/IP network (direct connection)		1	
Remote device over a DeviceNet network (accounted for in rack-optimized connection for local 1756-DNB module)		0	
Other remote communication adapter		1	
Safety input module		1	
Safety output module		2	
Produced tag		1	
Each consumer		1	
Consumed tag		1	
Cached message		1	
Block-transfer message		1	
Total			

ControlLogix Controller Accessories

Memory Cards

Memory cards offer nonvolatile memory to permanently store a user program and tag data on a controller. The 1756-L7*x* ControlLogix controller comes with 1784-SD1 Secure Digital card already installed. The 1756-L6*x* controllers support optional CompactFlash cards that you purchase separately. The memory cards install in a socket on the controller. Through RSLogix 5000 software, you can manually trigger the controller to save to or load from nonvolatile memory or configure the controller to load from nonvolatile memory on powerup.

The GuardLogix controller does not support user program storage or retrieval by using a CompactFlash card.

Technical Specifications - 1784 Memory Cards

Attribute	1784-CF64	1784-CF128	1784-SD1	1784-SD2
Memory	64 MB	128 MB	1 GB	2 GB
Supported controllers	1756-L6*x*		1756-L7*x*	
Weight, approx.	14.2 g (0.5 oz)		1.76 g (0.062 oz)	

Environmental Specifications - 1784 Memory Cards

Attribute	1784-CF64	1784-CF128	1784-SD1, 1784-SD2
Temperature, operating IEC 60068-2-1 (Test Ad, Operating Cold), IEC 60068-2-2 (Test Bd, Operating Dry Heat), IEC 60068-2-14 (Test Nb, Operating Thermal Shock)	-25...70 °C (-13...158 °F)		
Temperature, storage IEC 60068-2-1 (Test Ab, Unpackaged Nonoperating Cold), IEC 60068-2-2 (Test Bb, Unpackaged Nonoperating Dry Heat), IEC 60068-2-14 (Test Na, Unpackaged Nonoperating Thermal Shock)	-40...85 °C (-40...185 °F)		
Relative humidity IEC 60068-2-30 (Test Db, Unpackaged Damp Heat)	5...95% noncondensing		
Vibration IEC 60068-2-6 (Test Fc, Operating)	2 g @ 10...500 Hz		
Shock, operating IEC 60068-2-27 (Test Ea, Unpackaged Shock)	30 g		
Shock, nonoperating IEC 60068-2-27 (Test Ea, Unpackaged Shock)	50 g		
Emissions CISPR 11	Group 1, Class A		
ESD immunity IEC 61000-4-2	6 kV contact discharges 8 kV air discharges		
Radiated RF immunity IEC 61000-4-3	10V/m with 1 kHz sine-wave 80% AM from 80...2000 MHz 10V/m with 200 Hz 50% Pulse 100% AM @ 900 MHz 10V/m with 200 Hz 50% Pulse 100% AM @ 1890 MHz 3V/m with 1 kHz sine-wave 80% AM from 2000...2700 MHz		

Certifications - 1784 Memory Cards

Certification[1]	1784-CF64, 1784-CF128, 1784-SD1, 1784-SD2
CE	European Union 2004/108/EC EMC Directive, compliant with: • EN 61000-6-4, Industrial Emissions • EN 61326-1, Meas /Control/Lab., Industrial Requirements • EN 61000-6-2, Industrial Immunity • EN 61131-2, Programmable Controllers (Clause 8, Zone A & B)
C-Tick	Australian Radiocommunications Act, compliant with: AS/NZS CISPR 11, Industrial Emissions

(1) When marked. See the Product Certification link at http://www.ab.com for Declarations of Conformity, Certificates, and other certification details.

1756 Energy Storage Modules

Instead of a battery, the 1756-L7*x* controller ships with a 1756-ESMCAP energy storage module (ESM) already installed.

Technical Specifications - 1756 Energy Storage Modules

Attribute	1756-ESMCAP	1756-ESMNSE	1756-ESMNRM
Description	Capacitor-based energy-storage module Comes with the controller	ESM without WallClockTime back-up power Use this ESM if your application requires that the installed ESM deplete its residual energy to 40 µJoule or less before transporting it into or out of your application. In this case, complete these steps before you remove the ESM. 1. Turn off power to the chassis. After you turn off power to the chassis, the controller's OK status indicator transitions from Green to Solid Red to OFF. 2. **Wait at least 20 minutes for the residual stored energy to decrease to 40 µJoule or less before you remove the ESM.** **There is no visual indication of when the 20 minutes has expired. You must track that time period.** Additionally, you can use this ESM with a 1756-L73 (8 MB) or smaller memory-sized controller only.	Energy-storage module that secures the controller by preventing the USB connection and access to SD card removal. If the SD card is installed prior to insertion of the 1756 ESMNRM module, the SD card remains functional, but not removable. This ESM provides your application an enhanced degree of security.
Current draw @ 5.1V DC	330 mA	300 mA	330 mA
North American temperature code	T5		
IEC temperature code	T5		

Certifications - 1756 Energy Storage Modules

Certification[1]	1784-CF64, 1784-CF128
c-UL-us	UL Listed Industrial Control Equipment, certified for US and Canada. See UL File E65584 UL Listed for Class I, Division 2 Group A,B,C,D Hazardous Locations, certified for US and Canada. See UL File E194810
CE	European Union 2004/108/EC EMC Directive, compliant with: • EN 61326-1; Meas /Control/Lab., Industrial Requirements • EN 61000-6-2; Industrial Immunity • EN 61000-6-4; Industrial Emissions • EN 61131-2, Programmable Controllers (Clause 8, Zone A & B)
C-Tick	Australian Radiocommunications Act, compliant with: AS/NZS CISPR 11, Industrial Emissions
Ex	European Union 94/9/EC ATEX Directive, compliant with: • EN 60079-15, Potentially Explosive Atmospheres, Protection 'n' • EN 60079-0; General Requirements • II 3 G Ex nA IIC T5 X

(1) When marked. See the Product Certification link at http://www.ab.com for Declarations of Conformity, Certificates, and other certification details.

1756 ControlLogix Batteries

Each ControlLogix controller ships with a battery. The 1756-L6*x* controllers have nonvolatile memory if you install a 1784-CF64 or 1784-CF128 industrial CompactFlash card. With nonvolatile memory, the controller can be used without a battery. If you do not use a battery, current tag data will remain in the state it was when the nonvolatile memory was saved.

These tables summarize battery life, replacement battery compatibility, and recommendations for use of an externally-mounted battery assembly.

Technical Specifications - 1756 ControlLogix Batteries

Attribute	1756-BA1	1756-BA2	1756-BATM[1]	1756-BATA
Description	Lithium battery (0.59 g)	Lithium battery (0.59 g)	Externally-mounted battery assembly	Replacement lithium battery for 1756-BATM (5 g max lithium per each D cell; contains 2 D cells)
ControlLogix controllers	1756-L61, 1756-L62, 1756-L63 controllers, series A	1756-L61, 1756-L62, 1756-L63 controllers, series B 1756-L64, 1756-L65 controllers	1756-L61, 1756-L62, 1756-L63 controllers, series A	1756-BATM battery module
GuardLogix controllers	—	1756-L61S, 1756-L62S, 1756-L63S	—	—
Supported legacy controllers	1756-L55M*x* controllers[2] 1756-L60M03SE controller	—	1756-L55M*x* controllers[3] 1756-L60M03SE controller	1756-BATM battery module

(1) The 1756-BATM externally-mounted battery assembly is recommended for use with all 1756-L55*x* and is highly recommended for use with all series A 1756-L6*x* controllers, and provides longer battery life than the 1756-BA1 battery. The 1756-BATM assembly includes one 1756-BATA lithium battery assembly and a 1 m (3.28 ft) cable to connect housing to controller.

(2) The 1756-L55M22, 1756-L55M23, and 1756-L55M24 controllers have nonvolatile memory and can be used without a battery.

Serial Communication Cables

The 1756-L6*x* controllers have a built-in serial port.

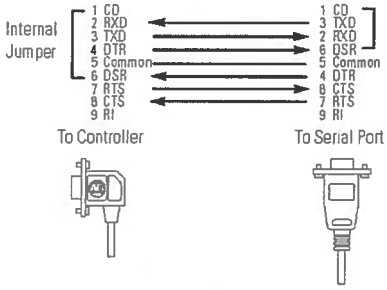

Technical Specifications - 1756 Serial Cables

Attribute	1756-CP3	1747-CP3
Connector type	Female 9-pin D-shell	
Connector angle	Right angle connector to controller, straight to serial port	
Length	3 m (9.84 ft)	

Rockwell Automation Support

Rockwell Automation provides technical information on the Web to assist you in using its products. At http://www.rockwellautomation.com/support/, you can find technical manuals, a knowledge base of FAQs, technical and application notes, sample code and links to software service packs, and a MySupport feature that you can customize to make the best use of these tools.

For an additional level of technical phone support for installation, configuration, and troubleshooting, we offer TechConnect support programs. For more information, contact your local distributor or Rockwell Automation representative, or visit http://www.rockwellautomation.com/support/.

Installation Assistance

If you experience an anomaly within the first 24 hours of installation, review the information that is contained in this manual.
You can contact Customer Support for initial help in getting your product up and running.

United States or Canada	1.440.646.3434
Outside United States or Canada	Use the Worldwide Locator at http://www.rockwellautomation.com/support/americas/phone_en.html, or contact your local Rockwell Automation representative.

New Product Satisfaction Return

Rockwell Automation tests all of its products to ensure that they are fully operational when shipped from the manufacturing facility. However, if your product is not functioning and needs to be returned, follow these procedures.

United States	Contact your distributor. You must provide a Customer Support case number (call the phone number above to obtain one) to your distributor to complete the return process.
Outside United States	Please contact your local Rockwell Automation representative for the return procedure.

Documentation Feedback

Your comments will help us serve your documentation needs better. If you have any suggestions on how to improve this document, complete this form, publication RA-DU002, available at http://www.rockwellautomation.com/literature/.

www.rockwellautomation.com

Power, Control and Information Solutions Headquarters

Americas: Rockwell Automation, 1201 South Second Street, Milwaukee, WI 53204-2496 USA, Tel: (1) 414.382.2000, Fax: (1) 414.382.4444
Europe/Middle East/Africa: Rockwell Automation, Vorstlaan/Boulevard du Souverain 36, 1170 Brussels, Belgium, Tel: (32) 2 663 0600, Fax: (32) 2 663 0640
Asia Pacific: Rockwell Automation, Level 14, Core F, Cyberport 3, 100 Cyberport Road, Hong Kong, Tel: (852) 2887 4788, Fax: (852) 2508 1846

Publication 1756-TD001D-EN-E - May 2011
Supersedes 1756-TD001C-EN-E - May 2010

Copyright © 2011 Rockwell Automation, Inc. All rights reserved. Printed in the U.S.A.

ControlLogix Power Supply Data Sheet

Technical Data

Allen-Bradley

1756 ControlLogix Power Supplies Specifications

Standard Power Supplies Catalog Numbers 1756-PA72, 1756-PA75, 1756-PB72, 1756-PB75, 1756-PC75, 1756-PH75
ControlLogix-XT Power Supplies Catalog Numbers 1756-PAXT, 1756-PBXT
Redundant Power Supplies Catalog Numbers 1756-PA75R, 1756-PB75R
Chassis Adapter Module Catalog Number 1756-PSCA2

Topic	Page
Standard AC Power Supplies	2
Standard DC Power Supplies	4
1756 ControlLogix-XT Power Supplies	7
Redundant Power Supplies	10

ControlLogix® power supplies are used with the 1756 chassis to provide 1.2V, 3.3V, 5V, and 24V DC power directly to the chassis backplane. Standard, ControlLogix-XT™, and redundant power supplies are available.

LISTEN. THINK. SOLVE.®

Allen-Bradley • Rockwell Software

Rockwell Automation

Standard AC Power Supplies

Table 1 - Technical Specifications - ControlLogix Standard AC Power Supplies

Attribute	1756-PA72/C	1756-PA75/B
Input voltage range	85…265V AC	
Input voltage, nom	120V/240V AC	
Input frequency range	47…63 Hz	
Input power, max	100VA/100 W	
Output power, max	75 W @ 0…60 °C (32…140 °F)(2)	
Power consumption	25 W @ 0…60 °C (32…140 °F)	
Power dissipation	85.3 BTU/hr	
Hold up time(1)	5 cycles @ 85V AC, 50/60 Hz 6 cycles @ 120V AC, 50/60 Hz 6 cycles @ 200V AC, 50/60 Hz 6 cycles @ 240V AC, 50/60 Hz	
Inrush current, max	20 A	
Current capacity at 1.2V DC	1.5 A	
Current capacity at 3.3V DC	4 A	
Current capacity at 5.1V DC	10 A	13 A
Current capacity at 24V DC	2.8 A	
Overcurrent protection, max	User-supplied 15 A(3)	
Fusing	Non-replaceable fuse is soldered in place(4)	
Transformer load, max	100VA	
Isolation voltage	250V (continuous), reinforced insulation type Type tested @ 3500V DC for 60 s, power input-to-backplane	
Weight, approx.	0.95 kg (2.10 lb)	
Dimensions	140 x 112 x 145 mm (5.51 x 4.41 x 5.71 in.)	
Module location	Left side of 1756 chassis	Left side of 1756 chassis (series B only)
Chassis	1756-A4, 1756-A7, 1756-A10, 1756-A13, 1756-A17	
Chassis compatibility	Series A Series B	Series B
Wire size	2.5 mm^2 (14 AWG) solid or stranded copper wire rated at 90 °C (194 °F), or greater, 1.2 mm (3/64 in.) insulation max	
Wire category	1 - on power ports(5)	
Conductor screw torque	0.8 N•m (7 lb•in)	
North American temperature code	T4	
Enclosure type rating	None (open-style)	

(1) The hold up time is the time between input voltage removal and DC power failure.
(2) The combination of all output power (5.1V backplane, 24V backplane, 3.3V backplane, and 1.2V backplane) cannot exceed 75 W.
(3) Use time-delay type overcurrent protection in all ungrounded conductors.
(4) This fuse is intended to guard against fire hazard due to short circuit conditions.
(5) Use this conductor category information for planning conductor routing as described in the system level installation manual. See the Industrial Automation Wiring and Grounding Guidelines, publication 1770-4.1.

Table 2 - Environmental Specifications - ControlLogix Standard AC Power Supplies

Attribute	1756-PA72/C, 1756-PA75/B
Temperature, operating IEC 60068-2-1 (Test Ad, Operating Cold), IEC 60068-2-2 (Test Bd, Operating Dry Heat), IEC 60068-2-14 (Test Nb, Operating Thermal Shock)	0…60 °C (32…140 °F)
Temperature, surrounding air, max	60 °C (140 °F)
Temperature, non-operating IEC 60068-2-1 (Test Ab, Unpackaged Nonoperating Cold), IEC 60068-2-2 (Test Bb, Unpackaged Nonoperating Dry Heat), IEC 60068-2-14 (Test Na, Unpackaged Nonoperating Thermal Shock)	-40…85 °C (-40…185 °F)
Relative humidity IEC 60068-2-30 (Test Db, Unpackaged Damp Heat)	5…95% noncondensing
Vibration IEC 60068-2-6 (Test Fc, Operating)	2 g @ 10…500 Hz
Shock, operating IEC 60068-2-27 (Test Ea, Unpackaged Shock)	30 g
Shock, nonoperating IEC 60068-2-27 (Test Ea, Unpackaged Shock)	50 g
Emissions	CISPR 11: Group 1, Class A
ESD immunity IEC 61000-4-2	6 kV contact discharges 8 kV air discharges
Radiated RF immunity IEC 61000-4-3	10V/m with 1 kHz sine-wave 80% AM from 80... 2000 MHz 10V/m with 200 Hz 50% Pulse 100% AM @ 900 MHz 10V/m with 200 Hz 50% Pulse 100% AM @ 1890 MHz 3V/m with 1 kHz sine-wave 80% AM from 2000...2700 MHz
EFT/B immunity IEC 61000-4-4	±4 kV at 5 kHz on power ports
Surge transient immunity IEC 61000-4-5	±1 kV line-line (DM) and ±2 kV line-earth (CM) on power ports
Conducted RF immunity IEC 61000-4-6	10 Vrms with 1 kHz sine-wave 80% AM from 150 kHz...80 MHz
Oscillatory surge withstand IEEE C37.90.1	3 kV
Voltage variation IEC 61000-4-11	30% dips for 1 period at 0° and 80° on AC supply ports 60% dips for 5 and 50 periods on AC supply ports ±10% fluctuations for 15 min on AC supply ports >95% interruptions for 250 periods on AC supply ports

Table 3 - Certifications - ControlLogix Standard AC Power Supplies

Certification(1)	1756-PA72/C, 1756-PA75/B
UL	UL Listed Industrial Control Equipment. See UL File E65584.
CSA	CSA Certified Process Control Equipment. See CSA File LR54689C. CSA Certified Process Control Equipment for Class I, Division 2 Group A,B,C,D Hazardous Locations. See CSA File LR69960C.
FM	FM Approved Equipment for use in Class I Division 2 Group A,B,C,D Hazardous Locations
CE	European Union 2004/108/EC EMC Directive, compliant with: EN 61326-1; Meas./Control/Lab., Industrial Requirements EN 61000-6-2; Industrial Immunity EN 61000-6-4; Industrial Emissions EN 61131-2; Programmable Controllers (Clause 8, Zone A & B) European Union 2006/95/EC LVD, compliant with: EN 61131-2; Programmable Controllers (Clause 11)
C-Tick	Australian Radiocommunications Act, compliant with: AS/NZS CISPR 11; Industrial Emissions
KC	Korean Registration of Broadcasting and Communications Equipment, compliant with: Article 58-2 of Radio Waves Act, Clause 3

(1) When marked. See the Product Certification link at http://www.ab.com for Declarations of Conformity, Certificates, and other certification details.

Standard DC Power Supplies

Table 4 - Technical Specifications - ControlLogix Standard DC Power Supplies

Attribute	1756-PB72/C	1756-PB75/B	1756-PC75/B	1756-PH75/B
Input voltage range	18…32V DC		30…60V DC	90…143V DC
Input voltage, nom	24V DC		48V DC	125V DC
Input power, max	95 W			
Output power, max	75 W @ 0…60 °C (32…140 °F)(2)			
Power consumption	20 W @ 0…60 °C (32…140 °F)			
Power dissipation	68.2 BTU/hr			
Hold up time(1)	35 ms @ 18V DC 40 ms @ 24V DC 40 ms @ 32V DC		50 ms @ 30…60V DC nom	50 ms @ 90…143V DC nom
Inrush current, max	30 A		20 A	
Current capacity at 1.2V	1.5 A			
Current capacity at 3.3V	4 A			
Current capacity at 5.1V	10 A	13 A		
Current capacity at 24V	2.8 A			
Overcurrent protection, max	User-supplied 15 A(3)			
Fusing	Non-replaceable fuse is soldered in place(4)			
Isolation voltage	250V (continuous), reinforced insulation type, power input-to-backplane Type tested @ 3500V DC for 60 s			
Weight, approx.	0.95 kg (2.10 lb)			
Dimensions	140 x 112 x 145 mm (5.51 x 4.41 x 5.71 in.)			
Module location	Left side of 1756 chassis			
Chassis	1756-A4, 1756-A7, 1756-A10, 1756-A13, 1756-A17			
Chassis compatibility	Series A Series B	Series B		
Wire size	2.5 mm^2 (14 AWG) solid or stranded copper wire rated at 90 °C (194 °F), or greater, 1.2 mm (3/64 in.) insulation max			
Wire category	1 - on power ports(5)			
Conductor screw torque	0.8 N-m (7 lb-in)			
North American temperature code	T4			
IEC temperature code	T4		N/A	
Enclosure type rating	None (open-style)			

(1) The hold up time is the time between input voltage removal and DC power failure.
(2) The combination of all output power (5.1V backplane, 24V backplane, 3.3V backplane, and 1.2V backplane) cannot exceed 75 W.
(3) Use time-delay type overcurrent protection in all ungrounded conductors.
(4) This fuse is intended to guard against fire hazard due to short circuit conditions.
(5) Use this conductor category information for planning conductor routing as described in the system level installation manual. See the Industrial Automation Wiring and Grounding Guidelines, publication 1770-4.1.

Table 5 - Environmental Specifications - ControlLogix Standard DC Power Supplies

Attribute	1756-PB72/C, 1756-PB75/B	1756-PC75/B, 1756-PH75/B
Temperature, operating IEC 60068-2-1 (Test Ad, Operating Cold), IEC 60068-2-2 (Test Bd, Operating Dry Heat), IEC 60068-2-14 (Test Nb, Operating Thermal Shock)	0…60 °C (32…140 °F)	
Temperature, surrounding air, max	60 °C (140 °F)	
Temperature, nonoperating IEC 60068-2-1 (Test Ab, Unpackaged Nonoperating Cold), IEC 60068-2-2 (Test Bb, Unpackaged Nonoperating Dry Heat), IEC 60068-2-14 (Test Na, Unpackaged Nonoperating Thermal Shock)	-40…85 °C (-40…185 °F)	
Relative humidity IEC 60068-2-30 (Test Db, Unpackaged Damp Heat)	5…95% noncondensing	
Vibration IEC 60068-2-6 (Test Fc, Operating)	2 g @ 10…500 Hz	
Shock, operating IEC 60068-2-27 (Test Ea, Unpackaged Shock)	30 g	
Shock, nonoperating IEC 60068-2-27 (Test Ea, Unpackaged Shock)	50 g	
Emissions	CISPR 11: Group 1, Class A	
ESD immunity IEC 61000-4-2	6 kV contact discharges 8 kV air discharges	
Radiated RF immunity IEC 61000-4-3	10V/m with 1 kHz sine-wave 80% AM from 80... 2000 MHz 10V/m with 200 Hz 50% Pulse 100% AM @ 900 MHz 10V/m with 200 Hz 50% Pulse 100% AM @ 1890 MHz 3V/m with 1 kHz sine-wave 80% AM from 2000...2700 MHz	
EFT/B immunity IEC 61000-4-4	±4 kV at 5 kHz on power ports	
Surge transient immunity IEC 61000-4-5	±1 kV line-line (DM) and ±2 kV line-earth (CM) on power ports	
Conducted RF immunity IEC 61000-4-6	10 Vrms with 1 kHz sine-wave 80% AM from 150 kHz..80 MHz	
Oscillatory surge withstand IEEE C37.90.1	N/A	3 kV
Voltage variation IEC 61000-4-11 IEC 61000-4-29	60% dips for 100 ms on DC supply ports 100% dips for 50 ms on DC supply ports ±20% fluctuations for 15 min on DC supply ports 5 s interruptions on DC supply ports 10 ms interruption on DC supply ports	

Table 6 - Certifications - ControlLogix Standard DC Power Supplies

Certification[1]	1756-PB72/C, 1756-PB75/B	1756-PC75/B, 1756-PH75/B
UL	N/A	UL Listed Industrial Control Equipment. See UL File E65584.
c-UL-us	UL Listed Industrial Control Equipment, certified for US and Canada. See UL File E65584. UL Listed for Class I, Division 2 Group A,B,C,D Hazardous Locations, certified for US and Canada. See UL File E194810.	N/A
CSA	CSA Certified Process Control Equipment. See CSA File LR54689C. CSA Certified Process Control Equipment for Class I, Division 2 Group A,B,C,D Hazardous Locations. See CSA File LR69960C.	
FM	FM Approved Equipment for use in Class I Division 2 Group A,B,C,D Hazardous Locations	N/A
CE	European Union 2004/108/EC EMC Directive, compliant with: • EN 61326-1; Meas./Control/Lab., Industrial Requirements • EN 61000-6-2; Industrial Immunity • EN 61000-6-4; Industrial Emissions • EN 61131-2; Programmable Controllers (Clause 8, Zone A & B) European Union 2006/95/EC LVD, compliant with: • EN 61131-2; Programmable Controllers (Clause 11)	
C-Tick	Australian Radiocommunications Act, compliant with: AS/NZS CISPR 11; Industrial Emissions	
Ex	European Union 94/9/EC ATEX Directive, compliant with: • EN 60079-15; Potentially Explosive Atmospheres, Protection "n" • EN 60079-0; General Requirements II 3 G Ex nA IIC T4 X	N/A
KC	Korean Registration of Broadcasting and Communications Equipment, compliant with: Article 58-2 of Radio Waves Act, Clause 3	

(1) When marked. See the Product Certification link at http://www.ab.com for Declarations of Conformity, Certificates, and other certification details.

1756 ControlLogix-XT Power Supplies

The ControlLogix-XT products include control and communication system components that, when used with FLEX I/O-XT™ products, provide a complete control system solution that can be used in environments where temperatures range from -20...70 °C (-4...158 °F).

When used independently, the ControlLogix-XT system can withstand environments where the temperature ranges from -25...70 °C (-13...158 °F).

Table 7 - Technical Specifications - ControlLogix-XT Power Supplies

Attribute	1756-PAXT	1756-PBXT
Input voltage range	85...265V AC	18...32V DC
Input voltage, nom	120/240V AC	24V DC
Input frequency range	47...63 Hz	N/A
Input power, max	82VA 64 W	54 W
Output power, max	42 W @ -25...70 °C (-13...158 °F)	
Power consumption	22 W	12 W
Power dissipation	75.1 BTU/hr	40.9 BTU/hr
Hold up time(1)	6 cycles @ 85V AV, 50/60 Hz 6 cycles @ 120V AV, 50/60 Hz 6 cycles @ 200V AV, 50/60 Hz 6 cycles @ 240V AV, 50/60 Hz	35 ms @ 18V DC 40 ms @ 24V DC 40 ms @ 32V DC
Inrush current, max	20 A	30 A
Current capacity at 1.2V	1.5 A	
Current capacity at 3.3V	4 A	
Current capacity at 5.1V	8 A	
Current capacity at 24V	1.75 A	
Overcurrent protection, max	User-supplied 15 A(2)	
Fusing	Non-replaceable fuse is soldered in place(3)	
Isolation voltage	250V (continuous), reinforced insulation type, power input-to-backplane Type tested @ 3260V DC for 60 s	
Weight, approx.	0.95 kg (2.10 lb)	
Dimensions	140 x 112 x 145 mm (5.51 x 4.41 x 5.71 in.)	
Module location	Left side of 1756 chassis	
Chassis	1756-A4XT, 1756-A5XT, 1756-A7XLT	
Wire size	2.5 mm^2 (14 AWG) solid or stranded copper wire rated at 90 °C (194 °F), or greater, 1.2 mm (3/64 in.) insulation max	
Wire category	1 - on power ports(4)	
Conductor screw torque	0.8 N-m (7 lb-in)	
North American temperature code	T4	T4A
IEC temperature code	T4	
Enclosure type rating	None (open-style)	

(1) The hold up time is the time between input voltage removal and DC power failure.
(2) Use time-delay type overcurrent protection in all ungrounded conductors.
(3) This fuse is intended to guard against fire hazard due to short circuit conditions.
(4) Use this conductor category information for planning conductor routing as described in the system level installation manual. See the Industrial Automation Wiring and Grounding Guidelines, publication 1770-4.1.

Table 8 - Environmental Specifications - ControlLogix-XT Power Supplies

Attribute	1756-PAXT	1756-PBXT
Temperature, operating IEC 60068-2-1 (Test Ad, Operating Cold), IEC 60068-2-2 (Test Bd, Operating Dry Heat), IEC 60068-2-14 (Test Nb, Operating Thermal Shock)	-25…70 °C (-13…158 °F)	
Temperature, surrounding air, max	70 °C 158 °F)	
Temperature, nonoperating IEC 60068-2-1 (Test Ab, Unpackaged Nonoperating Cold), IEC 60068-2-2 (Test Bb, Unpackaged Nonoperating Dry Heat), IEC 60068-2-14 (Test Na, Unpackaged Nonoperating Thermal Shock)	-40…85 °C (-40…185 °F)	
Relative humidity IEC 60068-2-30 (Test Db, Unpackaged Damp Heat)	5…95% noncondensing	
Vibration IEC 60068-2-6 (Test Fc, Operating)	2 g @ 10…500 Hz	
Shock, operating IEC 60068-2-27 (Test Ea, Unpackaged Shock)	30 g	
Shock, nonoperating IEC 60068-2-27 (Test Ea, Unpackaged Shock)	50 g	
Emissions	CISPR 11: Group 1, Class A	
ESD immunity IEC 61000-4-2	6 kV contact discharges 8 kV air discharges	
Radiated RF immunity IEC 61000-4-3	10V/m with 1 kHz sine-wave 80% AM from 80…2000 MHz 10V/m with 200 Hz 50% Pulse 100% AM at 900 MHz 10V/m with 200 Hz 50% Pulse 100% AM at 1890 MHz 3V/m with 1 kHz sine-wave 80% AM from 2000…2700 MHz	
EFT/B immunity IEC 61000-4-4	±4 kV at 5 kHz on power ports	
Surge transient immunity IEC 61000-4-5	±1 kV line-line (DM) and ±2 kV line-earth (CM) on power ports	
Conducted RF immunity IEC 61000-4-6	10 Vrms with 1 kHz sine-wave 80% AM from 150 kHz…80 MHz	
Oscillatory surge withstand IEEE C37.90.1	3 kV	N/A
Voltage variation IEC 61000-4-11 IEC 61000-4-29	30% dips for 1 period at 0° and 180° on AC supply ports 60% dips for 5 and 50 periods on AC supply ports ±10% fluctuations for 15 min on AC supply ports >95% interruptions for 250 periods on AC supply ports N/A	60% dips for 100 ms on DC supply ports 100% dips for 50 ms on DC supply ports ±20% fluctuations for 15 min on DC supply ports 5 s interruptions on DC supply ports 10 ms interruption on DC supply ports

Table 9 - Certifications - ControlLogix-XT Power Supplies

Certification[1]	1756-PAXT, 1756-PBXT
c-UL-us	UL Listed Industrial Control Equipment, certified for US and Canada. See UL File E65584. UL Listed for Class I, Division 2 Group A,B,C,D Hazardous Locations, certified for US and Canada. See UL File E194810.
CE	European Union 2004/108/EC EMC Directive, compliant with: • EN 61326-1; Meas./Control/Lab., Industrial Requirements • EN 61000-6-2; Industrial Immunity • EN 61000-6-4; Industrial Emissions • EN 61131-2; Programmable Controllers (Clause 8, Zone A & B) European Union 2006/95/EC LVD, compliant with: • EN 61131-2; Programmable Controllers (Clause 11)
C-Tick	Australian Radiocommunications Act, compliant with: AS/NZS CISPR 11; Industrial Emissions
Ex	European Union 94/9/EC ATEX Directive, compliant with: • EN 60079-15; Potentially Explosive Atmospheres, Protection "n" • EN 60079-0; General Requirements II 3 G Ex nA II CT4 X
KC	Korean Registration of Broadcasting and Communications Equipment, compliant with: Article 58-2 of Radio Waves Act, Clause 3

(1) When marked. See the Product Certification link at http://www.ab.com for Declarations of Conformity, Certificates, and other certification details.

Redundant Power Supplies

To build a redundant power supply system, you need the following.

Cat. No.	Description	Amount
1756-PA75R/A or 1756-PB75R/A	Redundant power supply	2
1756-CPR2	Redundant power supply cable (Length = 0.9 1m [3 ft])	2
1756-PSCA2	Redundant power supply chassis adapter module(1)	1
User-supplied	Annunciator wiring(2) (Max. length = 10 m [32.8 ft])	2

(1) The 1756-PSCA2 chassis adapter module is a passive device that funnels power from the redundant power supplies to the single power connector on the ControlLogix series B chassis backplane.
(2) Optional user-provided annunciator wiring can be connected to the solid state relay for status and troubleshooting purposes.

System Configuration Recommendations

We recommend you use one of these methods to configure your redundant power supply system.

Recommended Configurations for a System Using One Chassis

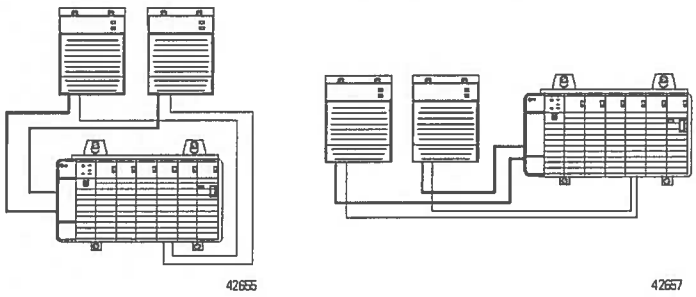

Recommended Configurations for a System Using Two Chassis

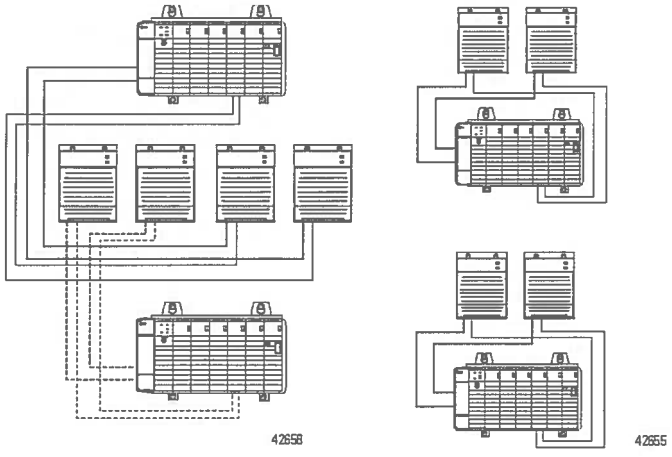

1756-PA75R and 1756-PB75R Mounting Dimensions

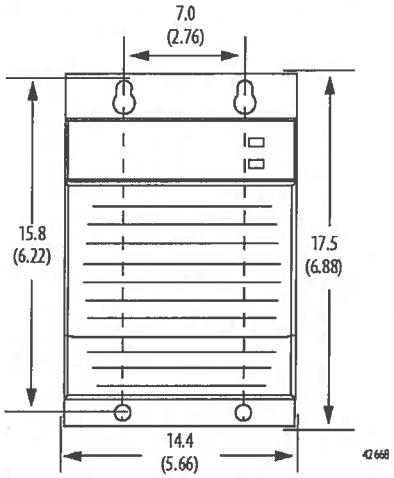

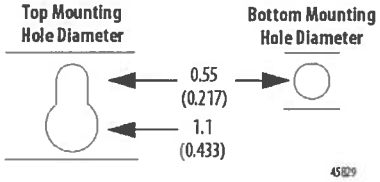

Dimensions are in cm (in.).

Redundant Power Supply Features

The redundant power supplies offer the same features as the standard power supplies, in addition to the following:

- Automatic chassis load sharing between the redundant power supplies
- Status indicators for visual operating status of the pair
- Solid state relay for system recognition of supply status when wired to an input module

Table 10 - Technical Specifications - ControlLogix Redundant Power Supplies

Attribute	1756-PA75R	1756-PB75R
Input voltage range	85…265V AC	19.2…32V DC
Input voltage	120V/220V AC	24V DC
Input frequency range	47…63 Hz	DC
Input power, max	120VA 115 W	110 W
Output power, max	75 W @ 0…60 °C (32…140 °F)	
Hold up time[1]	2 cycles @ 60 Hz 2 cycles @ 50 Hz	20 ms
Inrush current, max	20 A	30 A
Current capacity at 1.2V	1.5 A	
Current capacity at 3.3V	4 A	
Current capacity at 5.1V	13 A	
Current capacity at 24V	2.8 A	
Annunciator power	240V AC/DC, 50 mA, Resistive only	
Overcurrent protection, max	User-supplied 15 A[2]	
Fusing	Non-replaceable fuse is soldered in place[3]	
Isolation voltage	250V (continuous), Reinforced Insulation Type, Power Input to Backplane, Power Input to Annunciator, Annunciator to Backplane Type tested at 2500V DC for 60 s	

Table 10 - Technical Specifications - ControlLogix Redundant Power Supplies

Attribute	1756-PA75R	1756-PB75R
Dimensions (HxWxD), approx.	175 x 145 x 137 mm (6.9 x 5.7 x 5.4 in.)	
Weight, approx.	1.45 kg (3.2 lb)	
Chassis	1756-A4, 1756-A7, 1756-A10, 1756-A13, 1756-A17	
Wire Size	Power - 2.5 mm^2 (14 AWG) solid or stranded copper wire rated at 90 °C (194 °F), or greater, 1.2 mm (3/64 in.) insulation max Annunciator - 0.25…2.5 mm^2 (22…14 AWG) solid or stranded copper wire rated at 90 °C (194 °F), or greater, 1.2 mm (3/64 in.) insulation max	
Wire category (4)	1 - on power ports 3 - on annunciator ports 3 - on 1756-CPR2 connections	
Pilot duty rating	Annunciator - not rated	
Conductor screw torque	0.79 N•m (7 lb-in)	
Solid state relay contact	240V AC/DC(5)	
North American temperature code	T3C	T4
IEC temperature code	N/A	T4
Enclosure type rating	None (open-style)	

(1) The hold up time is the time between input voltage removal and DC power failure.
(2) Use time-delay type overcurrent protection in all ungrounded conductors.
(3) This fuse is intended to guard against fire hazard due to short circuit conditions.
(4) Use this conductor category information for planning conductor routing as described in the system level installation manual. See the Industrial Automation Wiring and Grounding Guidelines, publication 1770-4.1.
(5) Do not exceed 50 mA; resistive only.

Table 11 - Environmental Specifications - ControlLogix Redundant Power Supplies

Attribute	1756-PA75R	1756-PB75R
Temperature, operating IEC 60068-2-1 (Test Ad, Operating Cold), IEC 60068-2-2 (Test Bd, Operating Dry Heat), IEC 60068-2-14 (Test Nb, Operating Thermal Shock)	0…60 °C (32…140 °F)	
Temperature, surrounding air, max	60 °C 140 °F)	
Temperature, nonoperating IEC 60068-2-1 (Test Ab, Unpackaged Nonoperating Cold), IEC 60068-2-2 (Test Bb, Unpackaged Nonoperating Dry Heat), IEC 60068-2-14 (Test Na, Unpackaged Nonoperating Thermal Shock)	-40…85 °C (-40…185 °F)	
Relative humidity IEC 60068-2-30 (Test Db, Unpackaged Damp Heat)	5…95% noncondensing	
Vibration IEC 60068-2-6 (Test Fc, Operating)	2 g @ 10…500 Hz	
Shock, operating IEC 60068-2-27 (Test Ea, Unpackaged Shock)	30 g	
Shock, nonoperating IEC 60068-2-27 (Test Ea, Unpackaged Shock)	50 g	
Emissions	CISPR 11: Group 1, Class A	
ESD immunity IEC 61000-4-2	6 kV contact discharges 8 kV air discharges	
Radiated RF immunity IEC 61000-4-3	10V/m with 1 kHz sine-wave 80% AM from 30…1000 MHz 10V/m with 200 Hz 50% Pulse 100% AM @ 900 MHz 10V/m with 200 Hz 50% Pulse 100% AM at 1890 MHz 3V/m with 1 kHz sine-wave 80% AM from 2000…2700 MHz	
EFT/B immunity IEC 61000-4-4	±4 kV at 5 kHz on power ports ±4 kV at 5 kHz on annunciator ports	

Table 11 - Environmental Specifications - ControlLogix Redundant Power Supplies

Attribute	1756-PA75R	1756-PB75R
Surge transient immunity IEC 61000-4-5	±1 kV line-line (DM) and ±2 kV line-earth (CM) on power ports	
Conducted RF immunity IEC 61000-4-6	10 Vrms with 1 kHz sine-wave 80% AM from 150 kHz...80 MHz	
Voltage variation IEC 61000-4-1 IEC 61000-4-29:	 30% dips for 1 period at 0° and 180° on AC supply ports 60% dips for 5 and 50 periods on AC supply ports ±10% fluctuations for 15 min on AC supply ports >95% interruptions for 250 periods on AC supply ports N/A	 60% dips for 100 ms on DC supply ports 100% dips for 50 ms on DC supply ports\ ±20% fluctuations for 15 min on DC supply ports 5 s interruptions on DC supply ports 10ms interruption on DC supply ports

Table 12 - Certifications - ControlLogix Redundant Power Supplies

Certification[1]	1756-PA75R	1756-PB75R
c-UL-us	UL Listed Industrial Control Equipment, certified for US and Canada. See UL File E65584. UL Listed for Class I, Division 2 Group A,B,C,D Hazardous Locations, certified for U.S. and Canada. See UL File E194810.	
CSA	CSA Certified Process Control Equipment. See CSA File LR54689C. CSA Certified Process Control Equipment for Class I, Division 2 Group A,B,C,D Hazardous Locations. See CSA File LR69960C.	
FM	FM Approved Equipment for use in Class I Division 2 Group A,B,C,D Hazardous Locations	
CE	European Union 2004/108/EC EMC Directive, compliant with: EN 61326-1; Meas./Control/Lab., Industrial Requirements EN 61000-6-2; Industrial Immunity EN 61000-6-4; Industrial Emissions EN 61131-2; Programmable Controllers (Clause 8, Zone A & B) European Union 2006/95/EC LVD, compliant with: EN 61131-2; Programmable Controllers (Clause 11)	
C-Tick	Australian Radiocommunications Act, compliant with: AS/NZS CISPR 11; Industrial Emissions	
Ex	N/A	European Union 94/9/EC ATEX Directive, compliant with: EN 60079-15; Potentially Explosive Atmospheres, Protection "n" EN 60079-0; General Requirements II 3 G Ex nA IIC T4 X
KC	Korean Registration of Broadcasting and Communications Equipment, compliant with: Article 58-2 of Radio Waves Act, Clause 3	

(1) When marked. See the Product Certification link at http://www.ab.com for Declarations of Conformity, Certificates, and other certification details.

ControlLogix Redundant Power Supply Chassis Adapter Module

Table 13 - Technical Specifications - ControlLogix Redundant Power Supplies Chassis Adapter Module

Attribute	1756-PSCA2
Current capacity at 1.2V DC	1.5 A
Current capacity at 3.3V DC	4 A
Current capacity at 5.1V DC	1 5 A
Current capacity at 24V DC	2.8 A
Wire category [1]	3 - on 1756-CPR2 connections
North American temperature code	T5
IEC temperature code	T5
Enclosure type rating	None (open-style)

(1) Use this conductor category information for planning conductor routing as described in the system level installation manual. See the Industrial Automation Wiring and Grounding Guidelines, publication 1770-4.1.

Table 14 - Environmental Specifications - ControlLogix Redundant Power Supplies Chassis Adapter Module

Attribute	1756-PSCA2
Temperature, operating IEC 60068-2-1 (Test Ad, Operating Cold), IEC 60068-2-2 (Test Bd, Operating Dry Heat), IEC 60068-2-14 (Test Nb, Operating Thermal Shock)	0…60 °C (32…140 °F)
Temperature, surrounding air, max	60 °C (140 °F)
Temperature, nonoperating IEC 60068-2-1 (Test Ab, Unpackaged Nonoperating Cold), IEC 60068-2-2 (Test Bb, Unpackaged Nonoperating Dry Heat), IEC 60068-2-14 (Test Na, Unpackaged Nonoperating Thermal Shock)	-40…85 °C (-40…185 °F)
Relative humidity IEC 60068-2-30 (Test Db, Unpackaged Damp Heat)	5…95% noncondensing
Vibration IEC 60068-2-6 (Test Fc, Operating)	2 g @ 10…500 Hz
Shock, operating IEC 60068-2-27 (Test Ea, Unpackaged Shock)	30 g
Shock, nonoperating IEC 60068-2-27 (Test Ea, Unpackaged Shock)	50 g
Emissions	CISPR 11: Group 1, Class A
ESD immunity IEC 61000-4-2	6 kV contact discharges 8 kV air discharges
Radiated RF immunity IEC 61000-4-3	10V/m with 1 kHz sine-wave 80% AM from 80…2000 MHz 10V/m with 200 Hz 50% Pulse 100% AM at 900 MHz 10V/m with 200 Hz 50% Pulse 100% AM at 1890 MHz 3V/m with 1 kHz sine-wave 80% AM from 2000…2700 MHz

Table 15 - Certifications - ControlLogix Redundant Power Supplies Chassis Adapter Module

Certification[1]	1756-PSCA2
c-UL-us	UL Listed Industrial Control Equipment, certified for US and Canada. See UL File E65584. UL Listed for Class I, Division 2 Group A,B,C,D Hazardous Locations, certified for U.S. and Canada. See UL File E194810.
CSA	CSA Certified Process Control Equipment. See CSA File LR54689C. CSA Certified Process Control Equipment for Class I, Division 2 Group A,B, C,D Hazardous Locations. See CSA File LR69960C.
FM	FM Approved Equipment for use in Class I Division 2 Group A,B,C,D Hazardous Locations
CE	European Union 2004/108/EC EMC Directive, compliant with: EN 61326-1; Meas./Control/Lab., Industrial Requirements EN 61000-6-2; Industrial Immunity EN 61000-6-4; Industrial Emissions EN 61131-2; Programmable Controllers (Clause 8, Zone A & B)
C-Tick	Australian Radiocommunications Act, compliant with: AS/NZS CISPR 11; Industrial Emissions
Ex	European Union 94/9/EC ATEX Directive, compliant with: EN 60079-15; Potentially Explosive Atmospheres, Protection "n" EN 60079-0; General Requirements II 3 G Ex nA IIC T5 X
KC	Korean Registration of Broadcasting and Communications Equipment, compliant with: Article 58-2 of Radio Waves Act, Clause 3

(1) When marked. See the Product Certification link at http://www.ab.com for Declarations of Conformity, Certificates, and other certification details.

Power Load and Transformer Sizing

The following graphs show the input power requirements for the power supplies, given the power they are providing to the modules in the chassis.

Follow these steps to determine the power requirements for you chassis.

1. Calculate the Backplane Power Load by adding the power draw (in Watts) for all of the planned modules.

   For module power draws, refer to the module specification tables in the ControlLogix Selection Guide, publication 1756-SG001.

2. Locate the Backplane Power Load on the graph's vertical (y) axis and determine the corresponding Real Power (input-power) rating on the horizontal (x) axis.

   The Real Power value is the amount of power consumed by the power supply.

Power Supply Power Requirements

1756-PA72/C, 1756-PA75/B (AC)

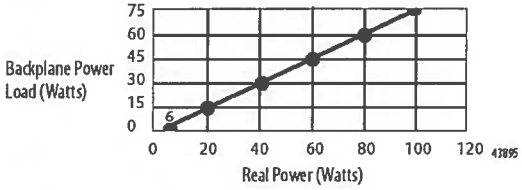

1756-PB72/C, 1756-PB75/B (DC)

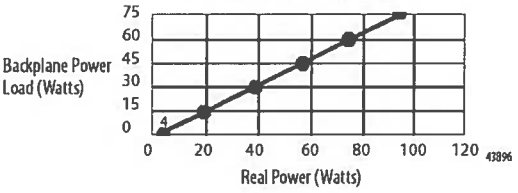

1756-PH75/B, 1756-PC75/B (DC)

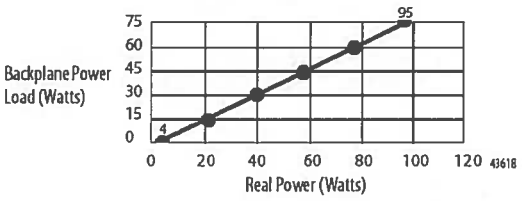

1756-PAXT (AC)

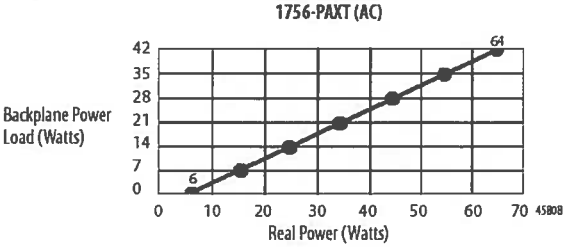

1756-PBXT (DC)

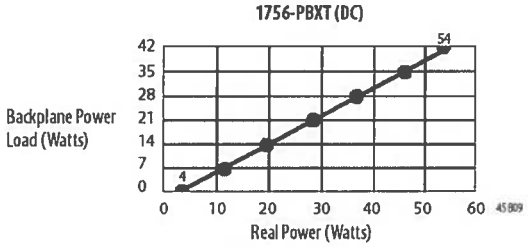

1756-PA75R/A (AC)

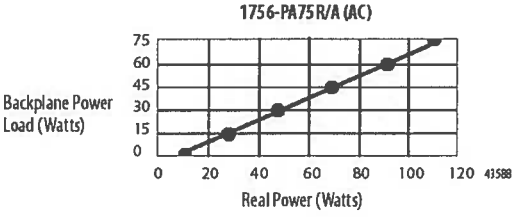

1756-PB75R/A (DC)

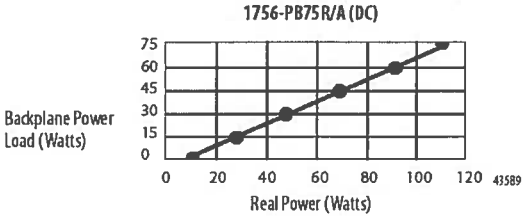

Apparent Power (Watts) = Transformer Load (VA) = Real Power (Watts)

Additional Resources

These documents contain additional information concerning related products from Rockwell Automation.

Resource	Description
ControlLogix Selection Guide, publication 1756-SG001	Provides overview of the ControlLogix system and its products.
ControlLogix Chassis Specifications Technical Data, publication 1756-TD006	Provides technical specifications for ControlLogix chassis.
ControlLogix Chassis and Power Supplies Installation Instructions, publication 1756-IN005	Provides planning and installation information for the ControlLogix chassis and power supplies.
ControlLogix System User Manual, publication 1756-UM001	Provides information on how to install, configure, program, and use ControlLogix systems.
Industrial Automation Wiring and Grounding Guidelines, publication 1770-4.1	Provides general guidelines for installing a Rockwell Automation® industrial system.
Product Certifications website, http://www.ab.com	Provides declarations of conformity, certificates, and other certification details.

You can view or download publications at http://www.rockwellautomation.com/literature/. To order paper copies of technical documentation, contact your local Allen-Bradley® distributor or Rockwell Automation sales representative.

Important User Information

Solid-state equipment has operational characteristics differing from those of electromechanical equipment. Safety Guidelines for the Application, Installation and Maintenance of Solid State Controls (publication SGI-1.1 available from your local Rockwell Automation sales office or online at http://www.rockwellautomation.com/literature/) describes some important differences between solid-state equipment and hard-wired electromechanical devices. Because of this difference, and also because of the wide variety of uses for solid-state equipment, all persons responsible for applying this equipment must satisfy themselves that each intended application of this equipment is acceptable.

In no event will Rockwell Automation, Inc. be responsible or liable for indirect or consequential damages resulting from the use or application of this equipment.

The examples and diagrams in this publication are included solely for illustrative purposes. Because of the many variables and requirements associated with any particular installation, Rockwell Automation, Inc. cannot assume responsibility or liability for actual use based on the examples and diagrams.

No patent liability is assumed by Rockwell Automation, Inc. with respect to use of information, circuits, equipment, or software described in this manual.

Reproduction of the contents of this manual, in whole or in part, without written permission of Rockwell Automation, Inc., is prohibited.

Documentation Feedback

Your comments will help us serve your documentation needs better. If you have any suggestions on how to improve this document, complete this form, publication RA-DU002, available at http://www.rockwellautomation.com/literature/.

Rockwell Automation, Rockwell Software, Allen-Bradley, ControlLogix, ControlLogix-XT, and FLEX I/O-XT are trademarks of Rockwell Automation, Inc.
Trademarks not belonging to Rockwell Automation are property of their respective companies.

www.rockwellautomation.com

Power, Control and Information Solutions Headquarters

Americas: Rockwell Automation, 1201 South Second Street, Milwaukee, WI 53204-2496 USA, Tel: (1) 414.382.2000, Fax: (1) 414.382.4444
Europe/Middle East/Africa: Rockwell Automation NV, Pegasus Park, De Kleetlaan 12a, 1831 Diegem, Belgium, Tel: (32) 2 663 0600, Fax: (32) 2 663 0640
Asia Pacific: Rockwell Automation, Level 14, Core F, Cyberport 3, 100 Cyberport Road, Hong Kong, Tel: (852) 2887 4788, Fax: (852) 2508 1846

Publication 1756-TD005C-EN-E - January 2012
Supersedes Publication 1756-TD005B-EN-E - May 2010

Copyright © 2012 Rockwell Automation, Inc. All rights reserved. Printed in the U.S.A.

ControlLogix I/O Modules Data Sheet

Rockwell Automation

I/O MODULES

1756 ControlLogix I/O Modules

The ControlLogix architecture provides a wide range of input and output modules to span many applications, from high-speed digital to process control. The ControlLogix architecture uses Producer-Consumer technology, which allows input information and output status to be shared among multiple ControlLogix controllers.

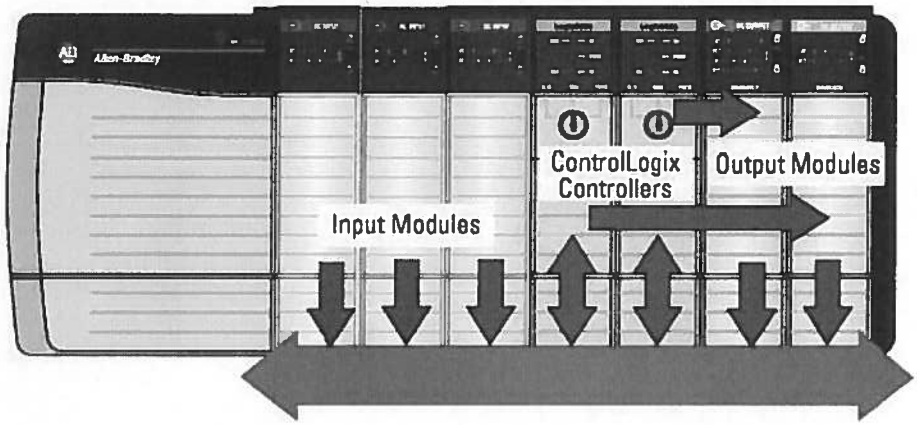

Each ControlLogix I/O module mounts in a ControlLogix chassis and **requires** either a removable terminal block (RTB) or a 1492 interface module (IFM) to connect all field-side wiring. RTBs and IFMs are not included with the I/O modules. They must be ordered separately.

Environmentals and Certifications

ControlLogix I/O Modules Environmental Specifications

	ControlLogix I/O Modules
Operating Temperature	0...60 °C (32...140 °F)
Storage temperature	-40...85 °C (-40...185 °F)
Relative Humidity	5...95% noncondensing
Vibration	2 g at 10...500 Hz
Operating Shock	30 g
Nonoperating Shock	50 g

ControlLogix I/O Modules Certifications

Certifications: c-UL-us, CE, CSA, C-Tick, FM, ATEX, TÜV.

When product is marked. See the Product Certification link at www.ab.com for Declarations of Conformity, Certificates, and other certification details. For TÜV and SIL certification details, see the Safety Certifications and SIL link.

Digital I/O Modules

The 1756 digital I/O modules support these features.

- Variety of voltage interface capabilities
- Isolated and nonisolated module types
- Point-level output fault states
- Direct-connect or rack-optimized communication
- Field-side diagnostics on select modules

In addition, you can select these types of digital I/O modules.

Digital I/O Type	Description
Diagnostic	These modules provide diagnostic features to the point level. These modules have a **D** at the end of the catalog number.
Electronic fusing	These modules have internal electronic fusing to prevent too much current from flowing through the module. These modules have an **E** at the end of the catalog number.
Individually isolated	These modules have individually isolated inputs or outputs. These modules have an **I** at the end of the catalog number.

Digital AC Input Modules

Specifications [PDF]

Cat. No.	Inputs/Outputs	Voltage Category	Operating Voltage Range	Removable Terminal Block
1756-IA8D	8 diagnostic inputs (4 points/group)	120V AC	79...132V AC	1756-TBNH 1756-TBSH
1756-IA16	16 inputs (8 points/group)	120V AC	74...132V AC	1756-TBNH 1756-TBSH
1756-IA16I	16 individually isolated inputs	120V AC	74...132V AC	1756-TBCH 1756-TBS6H
1756-IA32	32 diagnostic inputs (4 points/group)	120V AC	74...132V AC	1756-TBCH 1756-TBS6H
1756-IM16I	16 individually isolated inputs	240V AC	159...265V AC	1756-TBCH 1756-TBS6H
1756-IN16	16 inputs (8 points/group)	24V AC	10...30V AC	1756-TBNH 1756-TBSH

Digital AC Output Modules

Specifications [PDF]

Cat. No.	Inputs/Outputs	Voltage Category	Operating Voltage Range	Removable Terminal Block

1756-OA8	8 outputs (4 points/group)	120/240V AC	79...265V AC	1756-TBNH 1756-TBSH
1756-OA8D	8 diagnostic, electronically fused outputs (4 points/group)	120V AC	74...132V AC	1756-TBNH 1756-TBSH
1756-OA8E	8 electronically fused outputs (4 points/group)	120V AC	74...132V AC	1756-TBNH 1756-TBSH
1756-OA16	16 mechanically fused/group outputs (8 points/group)	120/240V AC	74...265V AC	1756-TBNH 1756-TBSH
1756-OA16I	16 individually isolated outputs	120/240V AC	74...265V AC	1756-TBCH 1756-TBS6H
1756-ON8	8 outputs (4 points/group)	24V AC	10...30V AC, current >50 mA 16...30V AC, current <50 mA	1756-TBNH 1756-TBSH

Digital DC Input Modules

Specifications [PDF]

Cat. No.	Inputs/Outputs	Voltage Category	Operating Voltage Range	Removable Terminal Block
1756-IB16	16 inputs (8 points/group)	12/24V DC sink	10...31.2V DC	1756-TBNH 1756-TBSH
1756-IB16D	16 diagnostic inputs (4 points/group)	12/24V DC sink	10...30V DC	1756-TBCH 1756-TBS6H
1756-IB16I	16 individually isolated inputs	12/24V DC sink/source	10...30V DC	1756-TBCH 1756-TBS6H
1756-IB16ISOE	16 individually isolated, sequence of events inputs	24/48V DC sink/source	10...55V DC	1756-TBCH 1756-TBS6H
1756-IB32	32 inputs (16 points/group)	12/24V DC sink	10...31.2V DC	1756-TBCH 1756-TBS6H
1756-IC16	16 inputs (8 points/group)	48V DC sink	30...55V DC at 60 °C 30...60V DC at 55 °C	1756-TBNH 1756-TBSH
1756-IG16	16 inputs (8 points/group)	5V DC TTL source (Low=True)	4.5...5.5V DC	1756-TBNH 1756-TBSH
1756-IH16I	16 individually isolated inputs	125V DC sink/source	90...146V DC	1756-TBCH 1756-TBS6H
1756-IH16ISOE	16 individually isolated, sequence of events inputs	125V DC sink/source	90...140V DC	1756-TBCH 1756-TBS6H
1756-IV16	16 inputs (8 points/group)	12/24V DC source	10...30V DC	1756-TBNH 1756-TBSH
1756-IV32	32 inputs (16 points/group)	12/24V DC source	10...30V DC	1756-TBCH 1756-TBS6H

Digital DC Output Modules

Specifications [PDF]

Cat. No.	Inputs/Outputs	Voltage Category	Operating Voltage Range	Removable Terminal Block
1756-OB8	8 outputs	12/24V DC source	10...30V DC	1756-TBNH 1756-TBSH

1756-OB8EI	8 electronically fused, individually isolated outputs	12/24V DC source	10...30V DC	1756-TBCH 1756-TBS6H
1756-OB8I	8 individually isolated outputs	12/24V DC source	10...30V DC	1756-TBCH 1756-TBS6H
1756-OB16D	16 diagnostic outputs (8 points/group)	24V DC source	19.2...30V DC	1756-TBCH 1756-TBS6H
1756-OB16E	16 electronically fused outputs (8 points/group)	12/24V DC source	10...31.2V DC	1756-TBNH 1756-TBSH
1756-OB16I	16 individually isolated outputs	12/24V DC sink/source	10...30V DC	1756-TBCH 1756-TBS6H
1756-OB16IS	16 individually isolated outputs 8 scheduled outputs	12/24V DC sink/source	10...30V DC	1756-TBCH 1756-TBS6H
1756-OB32	32 outputs (16 points/group)	12/24V DC source	10...31.2V DC	1756-TBCH 1756-TBS6H
1756-OC8	8 outputs (4 points/group)	48V DC source	30...60V DC	1756-TBNH 1756-TBSH
1756-OG16	16 outputs (8 points/group)	5V DC TTL Source (Low=True)	4.5...5.5V DC	1756-TBNH 1756-TBSH
1756-OH8I	8 individually isolated outputs	120V DC	90...146V DC	1756-TBCH 1756-TBS6H
1756-OV16E	16 electronically fused outputs (8 points/group)	12/24V DC sink	10...30V DC	1756-TBNH 1756-TBSH
1756-OV32E	32 electronically fused outputs (16 points/group)	12/24V DC sink	10...30V DC	1756-TBCH 1756-TBS6H

Contact Output Modules

Specifications [PDF]

Cat. No.	Inputs/Outputs	Operating Voltage Range	Removable Terminal Block
1756-OW16I	16 N.O. individually isolated outputs	5...150V DC 10...265V AC	1756-TBCH 1756-TBS6H
1756-OX8I	8 N.O. 8 N.C. individually isolated outputs (2 points/group)	5...150V DC 10...265V AC	1756-TBCH 1756-TBS6H

Analog I/O Modules

The 1756 analog I/O modules support these features.

- On-board data alarming
- Scaling to engineering units
- Real-time channel sampling
- Data Format: Integer mode (left justified, 2s complement) IEEE 32-bit floating point
- Module conversion method: Sigma-Delta
- Module keying: Electronic software configurable
- RTB keying: User-defined mechanical

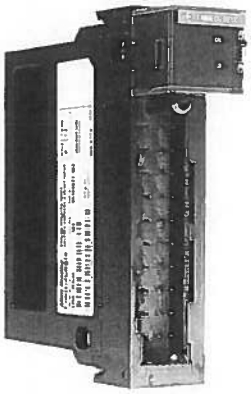

Analog Input Modules

Specifications [PDF]

Cat. No.	Inputs/Outputs	Range	Resolution	Removable Terminal Block
1756-IF6CIS	6 individually isolated inputs, current sourcing	0...21 mA	16 bits 0.34 µA/bit	1756-TBNH 1756-TBSH
1756-IF6I	6 individually isolated inputs	±10.5V 0...10.5V 0...5.25V 0...21 mA	16 bits 10.5V: 343 µV/bit 0...10.5V: 171 µV/bit 0...5.25V: 86 µV/bit 0...21 mA: 0.34 µA/bit	1756-TBNH 1756-TBSH
1756-IF8	8 single-ended inputs 4 differential inputs 2 high-speed differential inputs	±10.25V 0...10.25V 0...5.125V 0...20.5 mA	±10.25V: 320 µV/cnt (15 bits + sign bipolar) 0...10.25V: 160 µV/cnt (16 bits) 0...5.125V: 80 µV/cnt (16 bits) 0...20.5 mA: 0.32 µA/cnt (16 bits)	1756-TBCH 1756-TBS6H
1756-IF8H	8 differential voltage or current inputs, HART interface	±10V 0...5V 1...5V 0...10V 0...20 mA 4...20 mA	16...21 bits	1756-TBCH 1756-TBS6H
1756-IF16	16 single-ended inputs 8 differential or 4 differential (high speed) inputs	±10.5V 0...10.5V 0...5.25V 0...21 mA	16 bits 10.5V: 343 µV/bit 0...10.5V: 171 µV/bit 0...5.25V: 86 µV/bit 0...21 mA: 0.34 µA/bit	1756-TBCH 1756-TBS6H

Analog RTD and Thermocouple Modules

Specifications [PDF]

Cat. No.	Inputs/Outputs	Range	Resolution	Removable Terminal Block
1756-IR6I	6 individually isolated RTD inputs	1...487 Ω 2...1000 Ω 4...2000 Ω 8...4020 Ω	16 bits 1...487 Ω: 7.7 mΩ/bit 2...1000 Ω: 15 mΩ/bit 4...2000 Ω: 30 mΩ/bit 8...4020 Ω: 60 mΩ/bit	1756-TBNH 1756-TBSH
1756-IT6I	6 individually isolated thermocouple inputs 1 CJC	-12...78 mV -12...30 mV	16 bits -12...78 mV: 1.4 µV/bit -12...30 mV: 0.7 µV/bit	1756-TBNH 1756-TBSH
1756-IT6I2	6 individually isolated thermocouple inputs 2 CJC	-12...78 mV (1.4 µV per bit) -12...30 mV (0.7 µV per bit - high resolution range)	16 bits -12...78 mV: 1.4 Vµ/bit -12...30 mV: 0.7 µV/bit	1756-TBNH 1756-TBSH

Analog Output Modules

Specifications [PDF]

Cat. No.	Inputs/Outputs	Range	Resolution	Removable Terminal Block
1756-OF4	4 voltage or current outputs	±10.4V 0...21 mA	Voltage: 15 bits across 10.5V, 320 µV/bit Current: 15 bits across 21mA, 650 nA/bit	1756-TBNH 1756-TBSH
1756-OF6CI	6 individually isolated current outputs	0...21 mA	13 bits across 21mA (2.7 µA)	1756-TBNH 1756-TBSH
1756-OF6VI	6 individually isolated voltage outputs	± 10.5V	14 bits across 21V (1.3 mV) (13 bits across 10.5V +sign bit)	1756-TBNH 1756-TBSH
1756-OF8	8 voltage or current outputs	±10.4V 0...21 mA	15 bits across 21 mA - 650 nA/bit 15 bits across 10.4V - 320 µV/bit	1756-TBNH 1756-TBSH
1756-OF8H	8 voltage or current outputs, HART interface	±10.4V 0...20 mA 4...20 mA	15...16 bits	1756-TBNH 1756-TBSH

Analog Combination Input and Output Module

Specifications [PDF]

Cat. No.	Inputs/Outputs	Range	Resolution	Removable Terminal Block
1756-IF4FXOF2F	4 high-speed, sub-millisecond, differential inputs 2 high-speed voltage or current outputs	Input: ± 10.5V 0...10.5V 0...5.25V 0...21 mA Output: ± 10.4V 0...21 mA	Input: Approx. 14 bits across ±10V DC (21V total) ±10V: 1.3 mV/bit, 14-bit effective 0...10.5V: 1.3 mV/bit, 13-bit effective 0...5.25V: 1.3 mV/bit, 12-bit effective Approx. 12 bits across 21 mA 0...21 mA: 5.25 µA/bit Output:	1756-TBCH 1756-TBS6H

			13 bits across 21 mA = 2.8 µA/bit 14 bits across 21.8V = 1.3 mV/bit

Specialty I/O Modules

Specialty I/O modules are available for more application-specific needs.

Specialty I/O Modules

Specifications [PDF]

Cat. No.	Inputs/Outputs	Description	Removable Terminal Block
1756-CFM	4 inputs (2 per channel) 2 outputs, current sourcing	Configurable flow meter module 2 Flowmeter (F) inputs used for all modes 2 Gate inputs used in Totalizer mode for prover/store count	1756-TBNH 1756-TBSH
1756-HSC	2 counters, each with 3 inputs (A, B, Z for gate/reset) 4 outputs (2 points/group)	High-speed counter module 5V Operation: 4.5...5.5V DC 12/24V Operation: 10...31.2V DC	1756-TBCH 1756-TBS6H
1756-PLS	Left section: 2 groups of 4 outputs and 4 inputs each Center section: resolver interface and I/O control Right section: 2 groups of 4 outputs and 4 inputs each	Programmable limit switch module	Requires 3 RTBs: 1756-TBNH or 1756-TBSH

Accessories—I/O Modules

Removable Terminal Blocks

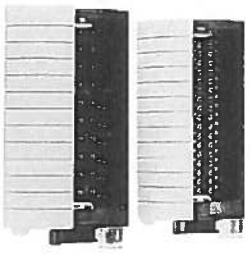

Removable terminal blocks (RTBs) provide a flexible interconnection between your plant wiring and 1756 I/O modules. The RTB plugs into the front of the I/O module. The type of module determines which RTB you need. You can choose screw-clamp or spring-clamp RTBs.

RTBs are not shipped with I/O modules. You must order them separately. The standard housing on the front of the wiring arm is not deep enough for 2.5 mm^2 (14 AWG) wiring. If you plan to use 2.5 mm^2 (14 AWG) wiring, also order the extended housing.

Removable Terminal Blocks

Specifications [PDF]

Cat. No.	1756-TBNH	1756-TBSH	1756-TBCH	1756-TBS6H	1756-TBE
Description	20-position NEMA screw-clamp RTB	20-pin spring-clamp RTB with standard housing	36-pin cage-clamp RTB with standard housing	36-pin spring-clamp RTB with standard housing	Extended depth terminal block housing
Screw Torque	0.8...1 N•m 7...9 lb•in		0.4 N•m 4.4 lb•in		–
Screwdriver width	8 mm (5/16 in.) max				

Wiring Systems

As an alternative to buying RTBs and connecting the wires yourself, you can buy a wiring system of:

- interface modules (IFMs) that provide the output terminal blocks for digital I/O modules. Use the pre-wired cables that match the I/O module to the IFM.
- analog interface modules (AIFMs) that provide the output terminal blocks for analog I/O modules. Use the pre-wired cables that match the I/O module to the AIFM.
- I/O module-ready cables. One end of the cable assembly is an RTB that plugs into the front of the I/O module. The other end has individually color-coded conductors that connect to a standard terminal block.

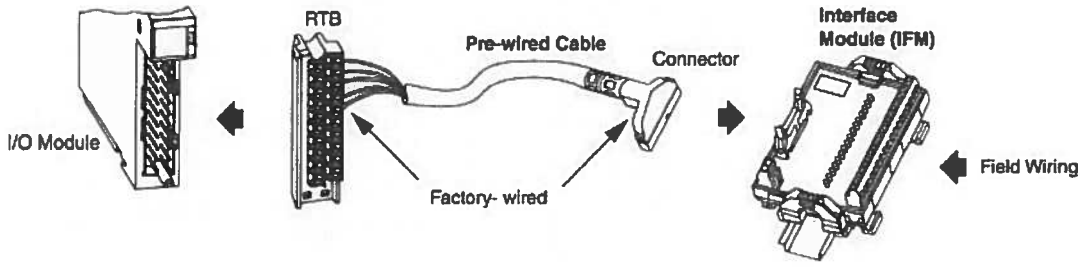

For more information, see the Allen-Bradley Industrial Controls Catalog, Terminal Blocks and Wiring Systems.

Or find a wiring system for your I/O module using our Build a Catalog Number product selection tool.

Copyright © 2012 Rockwell Automation, Inc. All Rights Reserved.

RS Logix 5000 Data Sheet

Rockwell Automation

SOFTWARE

Software for a ControlLogix System

Your selection of modules and network configuration determines what software packages you need to configure and program your system.

The FactoryTalk suite from Rockwell Software extends the Rockwell Automation Integrated Architecture by providing an information tier of software applications and services for production and performance management. Tight integration with the Rockwell Automation Logix control platform, as well as connectivity to third-party and legacy systems can help deliver a seamless flow of high-fidelity data across your enterprise.

1756 System Software

If you have	You need	Order
1756 ControlLogix controller	RSLogix 5000 Enterprise Series software	9324 series
1756 SERCOS or analog motion module		
1756-CN2, 1756-CN2R 1756-CN2RXT 1756-CNB, 1756-CNBR ControlNet communication module	RSNetWorx for ControlNet software (comes with the Standard/NetWorx and Professional Editions of RSLogix 5000 Enterprise Series software)	9324-RLD300NXENE (RSNetWorx option) or 9324-RLD700NXENE (RSLogix 5000 Professional software) or 9357-CNETL3 (RSNetWorx for ControlNet)
1756-DNB DeviceNet communication module	RSNetWorx for DeviceNet software (comes with the Standard/NetWorx and Professional Editions of RSLogix 5000 Enterprise Series software)	9324-RLD300NXENE (RSNetWorx option) or 9324-RLD700NXENE (RSLogix 5000 Professional software) or 9357-DNETL3 (RSNetWorx for DeviceNet)
1756-EN2F, 1756-EN2T 1756-EN2TXT 1756-ENBT, 1756-EWEB EtherNet/IP communication module (set the IP address)	RSLinx software or BOOTP/DHCP server utility to set IP addresses (RSLinx Lite and BOOTP server come with RSLogix 5000 Enterprise Series software) Optional RSNetWorx for EtherNet/IP software (comes with the Standard/RSNetWorx and Professional Editions of RSLogix 5000 Enterprise Series software)	9324 series Optional 9357-ENETL3 (RSNetWorx for EtherNet/IP)
1756-DHRIO, 1756-DHRIOXT communication module 1756-DH485 communication module	RSLinx software	9324 series
1757-FFLD2, 1757-FFLD4 1757-FFLDC2, 1757-FFLDC4 Foundation Fieldbus linking device	RSFieldbus Configuration Software	9308 series
Communication card in a workstation	RSLinx software (RSLinx Lite comes with RSLogix 5000 Enterprise Series software)	9324 series

RSLogix 5000 Programming Software

RSLogix 5000 Enterprise Series software is designed to work with Logix5000 controller platforms. RSLogix 5000 Enterprise Series software is an IEC 61131-3 compliant software package that offers relay ladder, structured text, function block diagram, and sequential function chart editors for you to develop application programs. Create your own instructions by encapsulating a section of logic in any programming language into an Add-On Instruction.

RSLogix 5000 Enterprise Series Software Packages

- Replace xx in the catalog number with the appropriate language designation: ZH=Chinese, EN=English, FR=French, DE=German, IT=Italian, JP=Japanese, KO=Korean, PT=Portuguese, and ES=Spanish.
- For upgrades from one package to another, see the StepForward program.
- Programming features available for purchase as a separate software package are noted, and the corresponding catalog number is listed in bold. For example, DriveExecutive Lite is available separately, and can be ordered using catalog number 9303-4DTE01ENE.

RSLogix 5000 Development Features

Edition	Service Edition	Mini Edition	Lite Edition	Standard Edition	Standard/ NetWorx Edition	Full Edition	Pro Edi
Cat. No.	**9324-RLD000xxE**	**9324-RLD200xxE**	**9324-RLD250xxE**	**Node Locked: 9324-RLD300xxE Concurrent License: 9324-RLD300xxF**	**9324-RLD300NXxxE**	**Node Locked: 9324-RLD600xxE Concurrent License:★ 9324-RLD600xxF**	**Nod 932 Con Lic 932**
Logix5000 controllers supported	All ‡	CompactLogix	CompactLogix	All	All	All §	All
Relay ladder diagram editor ♣	Upload/download and view	Full support	Full support	Full support	Full support	Full support	Full
Function block diagram **9324-RLDFBDENE** ♣	Upload/download and view	Upload/download Available separately	Full support	Upload/download Available separately	Upload/download Available separately	Full support	Full
Sequential function chart editor **9324-RLDSFCE** ♣ Δ	Upload/download and view	Upload/download Available separately	Full support	Upload/download Available separately	Upload/download Available separately	Full support	Full
Structured text editor **9324-RLDSTXE** ♣	Upload/download and view	Upload/download Available separately	Full support	Upload/download Available separately	Upload/download Available separately	Full support	Full
PhaseManager **9324-RLDPME**	Upload/download and view	Upload/download Available separately	Upload/download Available separately	Upload/download Available separately	Upload/download Available separately	Full support	Full
GuardLogix Safety Editor **9324-RLDGLXE** ♦	Upload/download and view	Upload/download Available separately	Full Support	Upload/download Available separately	Upload/download Available separately	Full support	Full
Highly integrated motion	Upload/download and view	Full Support	Full support	Full support	Full support	Full support	Full
Graphical trending	Full support	Full support ♠	Full support ♠	Full support	Full support	Full support	Full
DriveExecutive Lite	Available separately	Available separately	Available separately	Included	Included	Included	Incl

9303-4DTE01ENE							
PIDE autotune **9323-ATUNEENE** ▶	Available separately	Available separately	Available separately	Available separately	Available separately	Included	Incl
Advanced Process Control instructions **9324-RLDAPCENE 9324-RLDAPCCLENE&**	Upload/download and view only	Available separately	Available separately	Available separately	Available separately	Available separately	Ava
Routine source protection	Included	Included	Included	Included	Included	Included	Incl
RSLogix 5000 project compare	Included	Included	Included	Included	Included	Included	Incl

* As of RSLogix 5000 programming software, version 16. The software is designed to grab the highest functionality license first. For example, if and Professional Concurrent licenses are available on the FactoryTalk Activation server, RSLogix 5000 software will grab the highest functionalit
‡ Service Edition supports controllers with firmware revision 12 and later.
§ Full Edition supports controllers with firmware revision 10 and later.
♠ A multiple language editor package is available as 9324-RLDMLPE. It contains the function block, sequential function chart, and structured te
Δ The Structured Text editor option (9324-RLDSTXE) is required to program SFC actions in structured text.
♦ As of RSLogix 5000 programming software, version 16.
♠ As of RSLogix 5000 programming software, version 15.
▶ PIDE Autotune is not supported on 1769-L23x controllers.
& Select 9324-RLDAPCENE for a design license for software and a runtime license for one controller. Select 9324-RLDAPCCLENE for only a runtir controller (for pay to deploy).

RSLogix 5000 Integration with Other Applications

Edition	Service Edition	Mini Edition	Lite Edition	Standard Edition	Standard/ NetWorx Edition	Full Edition	Professional Edition
Cat. No.	**9324-RLD000xxE**	**9324-RLD200xxE**	**9324-RLD250xxE**	**Node Locked: 9324-RLD300xxE Concurrent License: 9324-RLD300xxF**	**9324-RLD300NXxxE**	**Node Locked: 9324-RLD600xxE Concurrent License:* 9324-RLD600xxF**	**Node Locked: 9324-RLD700NXxxE Concurrent License:* 9324-RLD700NXxxF**
RSLinx Classic software	Lite included	Lite included	Lite included	Lite included	Lite included	Lite included	Lite included
RSNetWorx ControlNet, RSNetWorx DeviceNet, RSNetWorx EtherNet/IP software ‡	Available separately	Available separately	Available separately	Available separately	Included	Available separately	Included
FactoryTalk AssetCentre audit support	Included	Included	Included	Included	Included	Included	Included
FuzzyDesigner **9324-RLDFZYENE §**	NA	Available separately	Available separately	Available separately	Available separately	Available separately	Available separately
RSLogix Emulate 5000 **9310-WED200ENE ♠**	Available separately	NA	NA	Available separately	Available separately	Available separately	Included
FactoryTalk security server Δ	Included	Included	Included	Included	Included	Included	Included
Security server emulator Δ	Included	Included	Included	Included	Included	Included	Included

RSLogix Architect 9326-LGXARCHENE ♦	Available separately	Available separately	Available separately	Available separately	Available separately	Available separately	Included
FactoryTalk View SE demo (50 tags/2 hours)	Available separately	Available separately	Available separately	Available separately	Available separately	Available separately	Included

* As of RSLogix 5000 programming software, version 16. The software is designed to grab the highest functionality license first. For example, if Standard, Full and Professional Concurrent licenses are available on the FactoryTalk Activation server, RSLogix 5000 software will grab the highest functionality license first.
‡ RSNetWorx for ControlNet software is 9357-CNETL3. RSNetWorx for DeviceNet software is 9357-DNETL3. RSNetWorx for EtherNet/IP software is 9357-ENETL3. They are available together as 9357-ANETL3.
§ As of RSLogix 5000 programming software, version 16.
≙ RSLogix Emulate 5000 software does not support Microsoft Windows Vista at this time.
Δ FactoryTalk AP install required - included on disk.
♦ As of RSLogix 5000 programming software, version 15.

RSLogix 5000 Enterprise Series Software Requirements

Description	Value
Minimum System Requirements for RSLogix 5000	• Pentium 4 2.8 GHz processor • 1 GB RAM • 16 GB available hard disk space • 1024x768, True Color graphics device
Recommended System For Best User Experience And Faster Downloads	• Intel Core i5 2.4GHz processor • 8 GB available hard disk space • 20GB available free disk space • DirectX 9 graphics device with WDDM 1.0 or higher driver
Operating System Support	RSLogix 5000 V20 software has been tested on the following operating systems: • Microsoft Windows 7 Professional (64-bit) with Service Pack 1a • Microsoft Windows 7 Home Premium (64-bit) with Service Pack 1 a • Microsoft Windows 7 Home Premium (32-bit) with Service Pack 1 a • Microsoft Windows Vista Business (32-bit) with Service Pack 2 b • Microsoft Windows XP Professional with Service Pack 3 • Microsoft Windows Server 2008 R2 Standard Edition with Service Pack 1 • Microsoft Windows Server 2008 Standard Edition with Service Pack 2 • Microsoft Windows Server 2003 R2 Standard Edition with Service Pack 2
Notes	1. User account control (UAC) must be set to "always notify." 2. User account control (UAC) must be turned on.

Copyright © 2012 Rockwell Automation, Inc. All Rights Reserved.

RS FactoryTalk View SE Data Sheet

Rockwell Automation

HMI SOFTWARE

FactoryTalk View

Product Overview

FactoryTalk View provides a suite of HMI software products designed with a common look, feel, and navigation to help speed HMI application development and training time. Supporting the Rockwell Automation Integrated Architecture, FactoryTalk View is part of the scalable and unified suite of monitoring and control solutions designed to span stand-alone machine-level applications up through supervisory-level HMI applications across a network. FactoryTalk View includes the PC-based development tool FactoryTalk View Studio, as well as FactoryTalk View Machine Edition, FactoryTalk View Site Edition, and FactoryTalk ViewPoint software.

Benefits

- Scalable across multiple platforms including PanelView Plus HMI terminals and the Industrial Computers, for both machine level and supervisory level HMI.
- Streamline HMI development with a common editor for FactoryTalk View ME and FactoryTalk View SE.
- Customize the operator experience using client-side VBA and the exposed graphics model.
- Migrate PanelView projects to FactoryTalk View Machine Edition.
- Maximize productivity by directly accessing tag information in the controller, eliminating the need to create HMI tags.
- Maximize the system availability with built-in failure detection and recovery.
- Shares data with other Factory-Talk enabled products providing common services such as security, alarming, and diagnostics.
- Gives remote users access to a terminal's displays from a standard web browser by using FactoryTalk ViewPoint software, and add-on to FactoryTalk View Studio.

Product Design

FactoryTalk View products offer a common development environment, architecture, and application reuse, so that customers can increase productivity, reduce operation costs, and improve quality.

FactoryTalk View Studio provides a common development tool for FactoryTalk View Site Edition and FactoryTalk View Machine Edition, allowing users to create applications in a single design environment. FactoryTalk View Studio supports editing and reusing projects for improved portability between embedded machine and supervisory HMI systems. With FactoryTalk View, all software products in the suite are built on the same integrated, scalable architecture. Application developers can import entire machine-level applications into supervisory-level applications or drag individual components and drop them right into supervisory projects, saving development time and reducing engineering and training costs. Users can import PanelBuilder32 (PanelView) applications into FactoryTalk View Machine Edition and RSView32 applications into FactoryTalk View Site Edition, protecting their current HMI investments.

FactoryTalk View Machine Edition (ME) is a machine-level HMI that supports both open and embedded operator interface solutions for monitoring and controlling individual machines or small processes. FactoryTalk View Machine Edition allows for a consistent operator interface across multiple platforms, including Microsoft Windows CE, Windows

7, Vista, XP, and server solutions. Components of this HMI are a PC-based development tool called FactoryTalk View Studio and a separate runtime system called FactoryTalk View Machine Edition Station. FactoryTalk View Machine Edition Station runs projects developed with FactoryTalk View Studio. Flexible runtime choices include Allen-Bradley PanelView Plus platforms, with display sizes that range from 4 to 15 inches, and the industrial computers.

FactoryTalk View Site Edition (SE) is an HMI for developing supervisory-level monitoring and control applications. This distributed and scalable architecture can be applied to a stand-alone one-server/one-user application to multiple users interfacing with multiple servers. FactoryTalk View Site Edition includes runtime servers and clients, allowing customers to develop and deploy a multi-server/multi-client application. Applications are developed with the FactoryTalk View Studio development tool.

FactoryTalk ViewPoint, an add on to FactoryTalk View Studio software and PanelView Plus 6 terminals, provides on-demand access to important information about your plant or process from a web browser. Plant managers, supervisors, OEMs, system integrators, and other key stakeholders can access and monitor plant operations from virtually any location. Using FactoryTalk ViewPoint, you can monitor customer applications, perform diagnostics, and provide remote support without having to be at customer sites. This thin-client configuration does not require any client software to install and maintain, lowering the total overall cost of ownership.

Communication

Offering preferred connectivity to Rockwell Automation products, FactoryTalk View Machine Edition is the ideal product to connect to devices such as ControlLogix, CompactLogix, MicroLogix, PLC-5, and SLC controllers. Networks supported include Ethernet, ControlNet, DH+, DF1, and DH-485. All FactoryTalk View Machine Edition runtime platforms also include KEPserver Enterprise to support a wide variety of third-party programmable controllers and devices.

Copyright © 2012 Rockwell Automation, Inc. All Rights Reserved.

RS FactoryTalk View SE System Requirements

Rockwell Automation

PERFORMANCE & VISIBILITY
FactoryTalk View

System Requirements

Hardware requirements for running FactoryTalk View SE
The hardware (or software) you use to run FactoryTalk View SE components depends on the demands your application places on the system. The greater the demand, the more powerful a system you need.

To develop applications with FactoryTalk View Studio, or to host large or complex applications, use computers with faster CPUs and more RAM. In any application, faster CPUs and more RAM will result in better performance.

It is also recommended that you have enough disk space to provide virtual memory that is at least twice the size of the physical RAM.

Hardware requirements for operator workstations
For computers hosting FactoryTalk View SE Clients in a network application or for a FactoryTalk View SE Client running a local application:

- Recommended: Intel Core 2 Duo, 2.66 GHz or higher and 2 GB RAM or more.
- Minimum: Intel Pentium 4, 2GHz or higher and 1 GB RAM or more.

Hardware requirements for engineering workstations
For computers hosting FactoryTalk View Studio or FactoryTalk View SE Administration Console in a network application:

- Recommended: Intel Core 2 Duo, 2.66 GHz or higher and 2 GB RAM or more.
- Minimum: Intel Pentium 4, 2GHz or higher and 1 GB RAM or more.

Hardware requirements for application servers
To support any number of clients (FactoryTalk View SE Client, FactoryTalk View Studio, the FactoryTalk View SE Administration Console, a FactoryTalk Transaction Manager connector, or a FactoryTalk View SE Server), for computers hosting application servers:

- Recommended: Quad Core Intel Xeon, 2.33 GHz or higher and 4 GB RAM.
- Minimum: Intel Pentium 4, Dual CPU, 3GHz or higher and 2 GB RAM or more.

FactoryTalk View SE drawings – Review popular **configurations** for Local, Workgroup and Domain applications, with overview and detail drawings.

FactoryTalk View Machine Edition

- FactoryTalk View Studio and FactoryTalk View Machine Edition Station software for Windows 7, Windows Vista, Windows XP and Windows 2003 and 2008 Server.
  - Personal computer running 32-bit versions of Microsoft Windows 7 Professional Edition, Windows XP Pro with Service Pack 3, Windows Server 2003, Windows Server 2008 SP2, and Windows Vista Business and Home Editions with Service Pack 2 or later
  - Minimum 300 MHz Intel® Pentium® II processor
  - Minimum 128 MB of RAM
  - Minimum 100 MB of permanent storage
- PanelView Plus6, and PanelView Plus CE terminals include FactoryTalk View Machine Edition runtime software.

HMI Server Data Sheet

Print Summary

Dell PowerEdge R415 - New!

Price	$3,750.00
Instant Savings	$501.33
Price	**$3,248.67**

Preliminary Ship Date: 4/5/2012

My Selections **All Options**

- **Dell PowerEdge R415 - New!**

Date	3/27/2012 6:02:38 PM Central Standard Time
Catalog Number	16 Retail rc1009777

Catalog Number / Description	Product Code	Qty	SKU	Id
PowerEdge R415: PowerEdge R415 Chassis w/up to 4 Cabled HDs, Quad-Pack LED Diagnostics	R415C2G	1	[225-2369]	1
Ship Group: Shipping Material,PowerEdge R415	SHIPGRP	1	[331-0545]	2
Processor: AMD Opteron™ 4162EE, 6C 1.7GHz, 2M L2/6M L3, 1333Mhz Max Mem	4162EE	1	[317-5456]	6
Additional Processor: AMD Opteron™ 4162EE, 6C 1.7GHz, 2M L2/6M L3, 1333Mhz Max Mem	2X4162	1	[317-5465][317-5513]	7
Memory: 16GB Memory(4x4GB),1333MHz Dual Ranked LV RDIMMs for 2 Processors,Optimized	16LV2PO	1	[317-5498]	3
Operating System: Microsoft Windows® Server 2008 R2 HPC Edition, No Media	MWS8HPC	1	[421-4335]	11
Hard Drive Configuration: No RAID for SAS 6Ir/PERC H200 Controller	NRH2C	1	[331-0561]	27
Internal Controller: SAS 6/iR SAS internal RAID adapter, PCI-Express for Cabled Configuration	SIRAPCI	1	[330-7658][342-0767]	9
Hard Drives: 500GB 7.2K RPM SATA 3.5in Cabled Hard Drive	500S35C	1	[341-9209]	1209
Power Supply: Power Supply, Non-Redundant, 480W	480NRDT	1	[330-4142]	36
Power Cords: NEMA 5-15P to C13 Wall Plug, 125 Volt, 15 AMP, 10 Feet (3m), Power Cord	125V10F	1	[310-8509]	38
1st Hard Drive: HD Multi-Select	HDMULTI	1	[341-4158]	8
Embedded Management: iDRAC6 Enterprise	DRAC6E	1	[318-0165]	14
Network Adapter: One Two-Port Embedded Broadcom® NetXtreme II 5716 Gigabit Ethernet NIC	OBNIC	1	[331-0540]	13
Rails: ReadyRails™ Sliding Rails with Cable	RRCMA	1	[330-4140]	28

Management Arm				
Bezel: Bezel	BEZEL	1	[313-7839]	17
Internal Optical Drive: DVD+/-RW ROM, SATA, Internal	DVDRW	1	[313-7834][313-9091]	16
System Documentation: Electronic System Documentation and OpenManage DVD Kit	EDOC	1	[331-0547]	21
Keyboards, Mice, Displays and Related Devices: USB Server Interface Pod, includes CAT 5 cables, TAA	USBCAT5	1	[430-4342]	4
Hardware Support Services: 3Yr Basic Hardware Warranty Repair: 5x10 HW-Only, 5x10 NBD Onsite	U3OS	1	[925-6487][929-1149][931-2822][931-9958][936-0940][994-4019]	29
Installation Services: No Installation	NOINSTL	1	[900-9997]	32
Proactive Maintenance: Proactive Maintenance: 1 event per year, Remote Delivery, 1 Year	ENTM1R1	1	[988-7407]	33

Print

Laptops | Desktops | Business Laptops | Business Desktops | Workstations | Servers | Storage | Services | Monitors | Printers | LCD TVs | Electronics | Top Searches
© 2012 Dell | About Dell | Legal & Regulatory Compliance | Privacy Statement | Regulatory Compliance | Site Terms of Use | Terms & Conditions | Unresolved Issues | Dell Recycling | Contact | Video Sitemap | Site Map | Feedback

snFG02

HMI Workstation Data Sheet

Dell recommends Windows® 7.

Print Summary

Dell OptiPlex 390 Small Form Factor - Fully Customizable

Price	$1,552.00
Instant Savings	$226.97
Price	**$1,325.03**

Preliminary Ship Date: 4/5/2012

My Selections **All Options**

- **Dell OptiPlex 390 Small Form Factor - Fully Customizable**

Date	3/27/2012 6:23:16 PM Central Standard Time
Catalog Number	16 Retail rc1009777

Catalog Number / Description	Product Code	Qty	SKU	Id
Processors: Intel® Core™ i3 2120 Processor (3.3GHz, 3M)	I32120	1	[317-7542]	2
Operating System(s): Genuine Windows® 7 Professional, No Media, 64-bit, English	W7PN61E	1	[330-6228][421-5334][421-5606]	11
OptiPlex 390 SFF: OptiPlex 390 Small Form Factor Base 90 Percent Efficient PSU	390SEG	1	[225-1481]	1
Productivity Software: Microsoft® Office Professional 2010, English	HPRO10E	1	[421-3950][421-3957]	22
Memory: 4GB DDR3 Non-ECC SDRAM,1333MHz, (1 DIMM)	4G3N331	1	[317-7547]	3
Boot Hard Drives: 500GB 3.5" SATA 3.0Gb/s and 16MB DataBurst Cache™	500GS3	1	[342-3285]	8
Removable Media Storage Device: 8X Slimline DVD+/-RW, Roxio Creator™ CyberlinkPowerDVD™ No Media	DRM8N	1	[318-0620][421-4370][421-4539]	16
Video Cards: Integrated Video, Intel®HD Graphics 2000 (1 HDMI & 1 VGA)	INTVID2	1	[320-2480]	6
Monitors: DELL UltraSharp™ U2312H 23 Inch Monitor with Adj Stand, Widescreen, VGA/ DVI/ DP	U2312H	1	[320-2731]	5
Keyboard: Dell KB212-B USB 104 Quiet Key Keyboard,English	EUSBE	1	[331-2024]	4
Mouse: Dell MS111 USB Optical Mouse	USBOP	1	[330-9458]	12
Speakers: Internal Dell Business Audio Speaker	INTSPK	1	[318-0319]	18
Energy Efficiency Options: Dell Energy Smart Power Management Settings Enabled. This item is not Estar qualified.	ESMART	1	[330-4817]	25
System Recovery: Dell Back-up and Recovery Manager for Windows 7	DBRM71	1	[331-3300]	47

Resource DVD: No Resource DVD	NORDVD	1	[313-3673]	27
Setup and Features Information Tech Sheet: No Tech Sheet	NOTSH	1	[310-9444]	40
Documentation: Documentation English and French	DOCENF	1	[330-1711][331-2030]	21
Ship Packaging Options: Shipping Material for System, Small Form Factor	SFFSHIP	1	[331-1270]	41
Thermals: Heat Sink, Performance/Mainstream, Small Form Factor	HSSFF	1	[331-1198]	17
Security Hardware: Chassis Intrusion Switch Option	SWITCH	1	[317-6625]	38
Power Supplies: OptiPlex 390 Small Form Factor Up to 90 Percent Efficient Power Supply	SFFPSE	1	[331-3221][331-3432]	20
Hardware Support Services: 3 Year Basic Hardware Service with 3 Year NBD Limited Onsite Service After Remote Diagnosis	U3OS	1	[932-1807][936-3268][953-4162][956-3780]	29

Print

Laptops | Desktops | Business Laptops | Business Desktops | Workstations | Servers | Storage | Services | Monitors | Printers | LCD TVs | Electronics | Top Searches
© 2012 Dell | About Dell | Legal & Regulatory Compliance | Privacy Statement | Regulatory Compliance | Site Terms of Use | Terms & Conditions | Unresolved Issues | Dell Recycling | Contact | Video Sitemap | Site Map | Feedback

snFG05

All-In-One Printer Copier Scanner Data Sheet

Products Ink Paper Drivers & Support Learn & Create Epson Store About Home

Sign In | Track My Order | My Account | Reorder List | Product Registration | Help | Shopping Cart

Epson Stylus NX515 All-in-One Printer

Special Promotions

$30 Instant Rebate

C11CA48231
Product In Stock

Regular price	$129.99
Instant Rebate :	-$30.00
After Rebate(s):	$99.99

Buy Now | Where to Buy

Customer Rating: 3 out of 5

3 of 5 (60%) customers would recommend this product to a friend.

Read all reviews Write a review

- Product Information
- Overview
- Features & Benefits
- Specifications
- What's in the Box?
- Paper & Media
- Inks
- Awards & Reviews
- Promotions
- Accessories
- Customer Reviews
- Warranty
- Technical Support

Supplies & Accessories

Check out all the supplies & accessories for your Epson product

Specifications

Printing Technology

- 4-color (CMYK) drop-on-demand MicroPiezo® ink jet technology

Nozzle Configuration

- 128 x 3 Black nozzles
  128 x 3 Cyan, Magenta, Yellow

Ink Palette

- Cyan, Magenta, Yellow and Black

Ink Cartridge Configuration

- 4 individual ink cartridges

Ink Type

- DURABrite® Ultra pigment ink
  (smudge, fade, water and highlighter resistant)

Fade Resistance / Print Longevity

- Up to 118 years[1]

Minimum Ink Droplet Size

- 2 picoliters

Maximum Print Resolution

- 5760 x 1440 optimized dpi

Maximum Print Speed

- **Black**
  36 ppm[2]
- **Color**
  36 ppm[2]

Laser Quality Print Speed

- Black
  15 ppm[2]
- Color
  9.3 ppm[2]

Maximum Copy Speed

- Black
  30 cpm[2]
- Color
  30 cpm[2]

4" x 6" Photo

- 4" x 6" borderless photo in as fast as 20 seconds[2]

Scanner Type

- Color flatbed

Photoelectric Device

- Color CIS line sensor

Optical Resolution

- 2400 dpi

Hardware Resolution

- 2400 x 2400 dpi

Maximum Resolution

- 9600 x 9600 dpi interpolated

Scanner Bit Depth

- 48-bit color, scan 24-bit output

Copy Quantity

- 1 - 99 (PC-free)

Maximum Copy Size

- 8.5" x 11" (PC-free)

Copy Features

- Fit to page, adjustable reduction and enlargement (25 - 400%), adjustable copy density

PC-free Printing

- Print all photos, photo index sheet and color photo restoration

Supported Digital Camera Technologies

- Epson PRINT Image Matching®, Exif Print

Direct Camera Connection

- Front PictBridge™ port (print from digital cameras and mobile phones, PC-free), USB

Color Preview Monitor

- 2.5" tft LCD

Built-in Memory Card Slots Compatibility

- Compact Flash® (memory card only), Microdrive®, Memory Stick®, Memory Stick Duo™ (with adapter), MagicGate™ Memory Stick, MagicGate Memory Stick Duo (with adapter), Memory Stick PRO™, Memory Stick PRO Duo (with adapter), SD™, SDHC™, MiniSD (with adapter), MiniSDHC (with adapter), MicroSD (with adapter), MicroSDHC (with adapter), MultiMediaCard™, xD-Picture Card™, xD-Picture Card Type-M, xD-Picture Type-M+, xD-Picture Card Type-H

PC-Free Filters and Image Enhancements

- Photo restoration

PC- Free Paper Support

- Plain (8.5" x 11"), Photo (4" x 6", 5" x 7") Letter size

Maximum Paper Size

- 8.5" x 44"

Paper Sizes

- 8.5" x 11", 8.5" x 14", A4, B5, A5, A6, Half letter, Executive, User definable (3.5" – 44" in length)

Borderless Photo Sizes

- 3.5" x 5", 4" x 6", 5" x 7", 8" x 10", 8.5" x 11", A4
  Preset custom sizes

Paper Types

- Supports plain paper, Epson Bright White Paper, Photo Paper Glossy, Premium Photo Paper Glossy, Ultra Premium Photo Paper Glossy, Premium Photo Paper Semi-gloss, Presentation Paper Matte, Premium Presentation Paper Matte and Matte Scrapbook Photo Paper (letter)

Envelope Types

- No. 10, plain paper, bond paper

Input Paper Capacity

- 100 sheets plain paper

Ink Cartridges

- **Recommended Ink Cartridges**[3]
  97 Extra High-capacity: Black (T097120)
  68 High-capacity: Black (T068120), Cyan (T068220), Magenta (T068320), Yellow (T068420) or multi-pack color (T068520)
  69 Standard-capacity: Black (T069120), Cyan (T069220), Magenta (T069320), Yellow (T069420) or multi-pack color (T069520)
  88 Moderate Use: Black (T088120), Cyan (T088220), Magenta (T088320), Yellow (T088420) or multi-pack color (T088520)

Ink Yield Information

- Click for information regarding cartridge yields

Weight and Dimensions (W x D x H)

- **Printing**
  17.7" x 21.3" x 11.7"
- **Storage**
  17.7" x 13.5" x 7.2"
- **Weight**
  13.5 lb

Case Color

- High Gloss Black

Connectivity

- Hi-Speed USB 2.0, Wireless Wi-Fi (802.11 b/g) – Compatible with 802.11n Wired Ethernet (10/100 Mbps)

Operating Systems

- Windows® 7, Windows Vista®, Windows XP, Windows XP x64, Windows 2000
- Mac OS® X 10.3.9, 10.4.11, 10.5.x and 10.6.x
  For the latest information regarding Snow Leopard, please visit www.epson.com/support/snowleopard

Software Included

- Epson printer driver, Web to Page, Epson Scan, ArcSoft® Print Creations

Color Management

- PhotoEnhance™ and ICM

Sound Level

- 43 dB

Temperature

- **Operating**
  50 ° to 95 °F, (10 ° to 35 °C)
- **Storage**
  -4 ° to 104 °F, (-20 ° to 40 °C)

Relative Humidity

- **Operating**
  20 – 80%,
- **Storage**
  5 – 85%

Safety Approvals

- Safety standards UL60950,
  CSA C22.2 No. 60950
  EMI FCC Part 15 subpart B class B,
  CAN/CSA - CEI/IEC CISPR 22 class B

Power Requirements

- **Rated voltage**
  100 – 120 VAC
- **Rated frequency**
  50 – 60 Hz
- **Rated current**
  0.6 Amp

Power Consumption

- Approx. 12 W ISO 10561 (Standalone copy printing)
- Approx. 3.0 W (Standby Mode)
- ENERGY STAR® qualified

Warranty

- One-year limited warranty in the U.S. and Canada

Notes

- [1] Based on accelerated testing of prints displayed under glass in indoor display conditions. Actual print stability will vary according to media, printed image, display conditions, light intensity, temperature, humidity and atmospheric conditions. Epson does not guarantee the longevity of prints. For maximum print life, display all prints under glass or UV filter or properly store them.

- [2] Maximum pages/copies per minute (ppm/cpm) are measured after first page with text patterns in Draft Mode on plain paper. Color photo in Draft Mode on Premium Photo Paper Glossy measured from start of paper feed. Laser quality black and color print speeds are determined in default, single-side mode in accordance with ISO/IEC 24734. Actual print times will vary based on system configuration, software, and page complexity. See www.epson.com/printspeed for details, including complete ISO reports.

- [3] Cartridge yields are based on continuous printing of a suite of five black and color pages as required by ISO/IEC 24711 and 24712. Actual yields will vary considerably for reasons including images printed, print settings, temperature and humidity. Yields may be lower when printing infrequently or predominantly with one ink color. A variable amount of ink remains in the cartridges after the "replace cartridge" signal. Part of the ink from the first cartridges is used for priming the all-in-one. Ink is used for both printing and print head maintenance. All inks are used for both black and color printing. For more information about yields for this all-in-one, see www.epson.com/cartridgeinfo.

Additional Notes

- Fastest print speeds in its class, printing black text in default mode compared to ink jet all-in-ones priced at $149 or less as of January 2009.
- Some applications and/or functions, like two-sided printing, may not be supported by Mac®.

---

*"Our Price" is for purchases directly from Epson. Dealer Prices may vary. All prices are in U.S. Dollars.

Other Epson Sites | Terms of Use | Privacy Policy | Corporate Info | Jobs | Contact Us | Epson Worldwide

Copyright © 2000-2009 Epson America, Inc.

All-In-One Printer Copier Scanner Data Sheet

WIN-911®

Alarm Notification Software Version 7

WIN-911 is real-time Alarm Notification Software that works with your existing control software or SCADA system to monitor operations and notify personnel of problem conditions. With WIN-911, your operators can concentrate on other tasks while your computer system does the monitoring.

Applications include:
Water & Wastewater Facilities, Power Plants, Military Facilities, Automotive, Semiconductor and Pharmaceutical Manufacturers, Building Management & Security, and Oil & Gas Monitoring.

WIN-911 can be used with pagers, cell phones, landline phones and most wireless communications.

NOTIFICATION OPTIONS

SMS Mobile-to-Mobile

To provide the most secure, reliable and timely notification option, you may now choose SMS 1-Way or SMS 2-Way text messaging. This method does not require an Internet or email connection. Just select a standard GSM modem and a text messaging plan from your local wireless carrier.

SMS 1-Way is featured with all WIN-911/Basic software installations. This allows SMS Text alarm messaging to be sent to all "on duty" users with a basic cell phone. It also gives notification when alarms have been acknowledged.

New Mobile-911 Version 2 and SMS 2-Way are supported with all WIN-911/PRO installations. Features include:

- Text notification on alarms
- Individual alarm acknowledgement from your cell phone
- "On Demand" list of all alarms states.
- Health Status
- 2- Way Manual Text messaging available in the WIN-911 alarm monitor

Mobile-911 Version 2

Mobile-911 Version 2 apps support Apple iOS, Android And Blackberry smart phones. This powerful option enhances WIN-911/PRO software the by using push notifications to alert users of new alarm events and displays the alarms in an interactive summary. See the Mobile-911 V2 data sheet for more information.

Telephony

Text-to-Speech & Voice Synthesis

- Instantly create all of your required voice sound files in just minutes....OPC and Direct Connects will use the tag descriptions from the SCADA database as the default text for the tag sound
- This version also offers the opportunity to select Dynamic Text-to-Speech Runtime Voice Synthesis
- Verbalize the text from the tag values and descriptions to the local audio and telephone notification types
- Eliminates the need for pre-recorded .wav files

Premium Voice

This is a standard feature found on all new WIN-911/PRO systems. It offers professional sounding voices as an alternative to the Microsoft choices. Voices are available in male and female selections. The standard accent is US English. International voices such as UK English, French, and Italian are available as special order.

WIN-411®

WIN-411 Reports is a standard feature with the voice telephone option and supports IFIX and Wonderware Direct Connects. (This feature is not supported with Rockwell Software products in this release.) Authorized users can call in and have access to current alarms and data values. Additionally, the user can change a data value in the SCADA database. This function is password protected and can be limited to minimum and maximum allowable values.

Dialogic Telephony Cards

WIN-911 continues to support the world's leader in computer telephony for applications requiring robust communications and multiple incoming lines.

Voice Capable (TAPI) Modems

Lower cost solutions for single line voice connections. These devices are typically "Plug & Play" and greatly reduce installation hassles.

Wireless & Email Notification

Support for Email using SMTP service or Alphanumeric Pagers using TAP protocol are also supported.

4222 S. Industrial Drive, Suite 125, Austin, TX 78744 • Phone 512 326-1011 • Fax 512 326-1019
Sales@SpecterInstruments.com • WWW.SpecterInstruments.com • (02/2009)

DATA INTERFACE OPTIONS

This connection to your SCADA Database is the most advanced in the industry. Stand-alone and Distributed installations are supported.

WIN-911 Direct Connect

- This offers the most seamless and powerful connection available
- Your SCADA system determines the alarm
- WIN-911 does the remote alarm notification
- User can acknowledge the alarms in your SCADA database locally or by phone

WIN-911 Direct Connect supports ***Rockwell (RSView32, FactoryTalk View SE*** and ***FactoryTalk), GE Fanuc Proficy (iFIX)*** and **Wonderware InTouch** – SCADA products. (See separate datasheet for FactoryTalk.)

Other Connections

- ***OPC:*** Operating as an OPC Client, WIN-911 is compatible with any OPC server that supports Data Access Version 1.0 & 2.0. Network connections are supported
- ***Microsoft DDE:*** The generic DDE connection is still available for other Windows applications that can be configured as a DDE Server

SCADA Database Import

- Import your existing SCADA Database or data from OPC Servers using WIN-911's Import Browser
- Select the data tags you want to include in WIN-911
- The Database Import Utility will instantly build a WIN-911 configuration
- Simply enter your pager & phone numbers, e-mail addresses, assign duty schedules & groups
- You're done in just minutes
- ***Or, Rockwell Software users may want to use the new Filter Tags.*** You may configure "filter tags" which are selected from the Alarm Database and brought into WIN-911 for remote notification on-the-fly.

ADDITIONAL FEATURES

Alarm Log Manager

The ability to view, sort, arrange, and print your alarm history any way you would like.

- Personnel notification attempts and confirmation
- Acknowledgements, events, and error codes
- Each line item may be annotated using the "Notes" feature

WEB-911 XTools

This is a new option for WIN-911 offering a family of ActiveX controls that will allow the user to drop WIN-911 configuration modules into most SCADA displays. Each module is called an XTool. They include:

XContacts – add or edit contacts in Phone Book

XGroup – edit the Group function

XSchedule – view and edit all users' duty schedules

XApply – apply changes to the WIN-911 Runtime

XStandby and XActivate – scripting controls for hot backup systems

Security Options

WIN-911 offers many levels of optional security and scripting tools for achieving unique integration with your SCADA installation.

- Password & Acknowledgement Codes can control access to most functions from a caller ID to restricting changes to authorized operators
- System Health Heartbeats and Watchdogs can be setup to monitor health of both WIN-911 and the SCADA Software
- Hot Backup capabilities with scripting tools are available for the SCADA system to control which WIN-911 system is responsible for the remote alarm notification

WIN-911 Now Available As A Service

You may now choose to apply WIN-911 runtime as a Windows Service for most applications. Contact factory for minor limitations or technical information.

Audit Modifications

Track and archive modifications to your WIN-911configuration to a special text file using the Audit Modification tool. Using this text file with encryption software will meet the 21CFR11 requirements for monitoring changes in the configuration.

Specter Instruments

4020 S. Industrial Drive, Suite 120, Austin, TX 78744 • Phone 512 326-1011 • Fax 512 326-1019
Sales@SpecterInstruments.com • WWW.SpecterInstruments.com • (02/2009)

END OF SECTION

SECTION 40 9500

PROCESS CONTROL HARDWARE INTERFACES

PART 1 GENERAL

1.1 SECTION INCLUDES

A. This section includes the specification for development of the process control hardware and interfaces.

B. It is the intent of this section to procure, install, connect, program, and calibrate the selected hardware devices as necessary as shown in the system drawings. Some equipment controls are specified in other portions of the subcontract documents. It is the responsibility of the bidder to read and conform to all sections of this specification, review all subcontract drawings of all divisions, and coordinate with all equipment suppliers of material specified under other sections of this specification.

C. The engineering, installation supervision, calibration, start up, and checkout necessary for the process control hardware and interfaces shall be provided under this section.

D. Provide the necessary materials and manpower to participate in the testing, adjusting, and balance and the commissioning process as required by those sections of this specification.

E. Process Control Hardware:

1. Process Control Panels and Hardware;
2. Process Control Input/Output Modules;
3. Process Control Networks;
4. Process Control Hardware Interfaces;
5. Process Control Mounting Racks and Support; and
6. Process Control Wiring (Cables, Conduits, Raceways, and Junction Boxes).

1.2 RELATED SECTIONS

A. Section 01 2500, "Substitution Procedures."

B. Section 01 4000, "Quality Requirements."

C. Section 01 4200, "Abbreviations and Acronyms, Definitions, and References."

D. Section 01 6000, "Product Requirements."

E. Section 01 8116, "Facility Environmental Requirements."

F. Section 13 4800, "Sound, Vibration, and Seismic Control."

1.3 ABBREVIATIONS AND ACRONYMS, DEFINITIONS, AND REFERENCES

A. Refer to Section 01 4200, "Abbreviations and Acronyms, Definitions, and References."

B. Drawings:

1. Drawing C55864, Sheet E-6140, "Control System Block Diagram."
2. Drawing C55864, Sheets E-5110A, & E-5110B, "CAB-101 Panel Layout"
3. Drawing C55864, Sheets E-5111A, & E-5111B, "CAB-102 Panel Layout"

4. Drawing C55864, Sheet E-5114, "CAB-105 Panel Layout"
5. Drawing C55864, Sheet E-5115, "IJB-101 Panel Layout"
6. Drawing C55864, Sheet E-5116, "IJB-102 Panel Layout"
7. Drawing C55864, Sheet E-5117, "IJB-103 Panel Layout"
8. Drawing C55864, Sheet E-5119, "IJB-105 Panel Layout"
9. Drawing C55864, Sheet E-5120, "IJB-106 Panel Layout"
10. Drawing C55864, Sheet E-5121, "IJB-107 Panel Layout"
11. Drawing C55865, Sheets E-5202A, & E-5202B, "CAB-103 Panel Layout"
12. Drawing C55867, Sheets E-5413A, & E-5413B, "CAB-104 Panel Layout"

1.4 SUBMITTALS

A. Provide the following in accordance with the requirements of Exhibit I and the timeline specified.

1. Before Fabrication :

   a. Documentation of International Organization for Standardization (ISO 9001) certification (if applicable).

   b. Provide a copy of the Quality Assurance Plan identifying procurement, design, fabrication, test and inspection, material traceability, and nonconformity controls for approval by Los Alamos National Laboratory (LANL) prior to Contract award.

   c. Catalog cut sheets on process control hardware, which show performance characteristics, dimensions, material of fabrication, and other characteristics necessary to ensure conformity with the design requirements.

   d. Manufacturer's outline drawings, assembly drawings, wiring diagrams, and electrical schematics for process control hardware. To include general arrangement of all cabinet configurations and junction box configurations.

   e. Provide functional test procedure.

   f. Support plan outlining product support for products in PART 2. Identify which products are available for 5 years or more. Identify if the parts are "off-the-shelf."

2. Before Shipment:

   a. Certificates of conformance (COC) for process control hardware attesting that items are in accordance with specified requirements.

   b. Detailed installation instructions for process control hardware.

   c. Listing of configuration parameters.

   d. Manufacturer's operating procedures, including safety and troubleshooting procedures, for process control software.

   e. Manufacturer's maintenance procedures, including service schedules, recommended spare parts, and warranties, for process control hardware.

   f. Listing of associated equipment numbers with firmware version number.

g. Factory calibration settings if these settings are accessible by the end-user.

h. Storage and handling procedures for long term storage, environmental requirements, shelf life.

i. Test reports outlining results of verification of requirements in Paragraph 1.8.

3. With Shipment:

a. Calibration certificate for input/output modules.

b. Evidence of nationally recognized testing laboratory (NRTL) or Underwriters Laboratories, Inc. (UL) listing or labeling for process control hardware.

1.5 QUALITY ASSURANCE

A. Seller's Quality Assurance Requirements:

1. Work Identified in this section shall be done under a Quality Assurance Program in accordance with Section 01 4000, "Quality Requirements."

2. Process control network fiber optic cabling shall be installed by a certified member company of Corning Extended Warranty Program to obtain warranty on installation for 25 years.

B. Receipt Inspection:

1. Generally, all equipment and accessories installed under this subcontract shall be inspect by the subcontractor in the presence of the LANL Startup and Commissioning Representative and approved before acceptance. The subcontractor shall be responsible for all repairs as required.

2. Upon receipt, the hardware will be visually inspected by a qualified Subcontractor Quality Control Inspector for any damage or abnormalities that could affect their performance in accordance with the Quality Assurance Program.

3. Documentation will be reviewed by a qualified Subcontractor Quality Control Inspector to determine that the required documentation as specified in Section 01 4000, "Quality Requirements," is present and traceable to the instruments.

C. Calibration and Material Certificates:

1. I/O modules to be calibrated by manufacturer. Calibration shall be traceable to National Institute of Standards and Technology (NIST) standards.

2. Calibration documentation is to be included with the instruments at time of delivery.

D. Storage and Handling:

1. In addition to the requirements in Section 01 6000, "Product Requirements":

a. Vendor shall comply with Section 01 4000, "Quality Requirements." The supplied equipment specified in this document shall be considered Level B for the shipping, handling, and storage requirements listed below.

b. Vendor shall prepare, pack, handle, load, ship, and store all materials and equipment for shipment in accordance with Section 01 4000, "Quality Requirements."

c. Vendor shall be responsible for any damage resulting from improper packing until acceptance. Subcontractor shall inspect all materials upon receipt.

d. Each shipment container shall include a packing list of all items contained in that shipment container. Also, a copy of each packing list shall be sent to the LANL Subcontractor Technical Representative (STR).

e. Vendor shall be responsible for providing any special devices needed for the delivery of any equipment and/or material.

f. Vendor shall define any heating, air conditioning, humidity control, or other storage criteria for equipment that is to be installed for regular use or is intended to be used as spare.

g. Vendor shall define long-term storage limits and maintenance procedures that are required to ensure these limits.

h. Vendor shall define shelf-life limits of all supplied equipment.

i. All openings shall be capped, plugged, or otherwise sealed against the intrusion or water, dirt, and debris. Water shall be removed from cavities to protect against damage caused by freezing and desiccant inserted, if appropriate.

E. Nonconformance:

1. Nonconformance of hardware shall be documented and corrected before shipment. If found on receipt, nonconformance shall be documented and corrected before installation at the expense of the subcontractor in accordance with Section 01 4000, "Quality Requirements."

F. Personnel Qualification:

1. Personnel installing instrumentation devices shall be familiar with type of hardware interfaces, and required installation practices. Refer to vendor's Quality Assurance Plan for additional requirements for installation personnel.

G. Electrical Suitability:

1. All controllers and hardware shall be UL- or NRTL-listed or labeled.

2. Each enclosure or panel configuration with process control hardware installed shall be UL or NRTL-listed as an assembly.

3. Design and workmanship of process control panels shall comply with the requirements of UL 508. Affix a UL 508 compliance label to the interior of the panel.

4. Ethernet networks shall be compatible with IEEE 802.3 (*Carrier Sense Multiple Access with Collision Detection (CSMA/CD) Access Method and Physical Layer Specifications*)

5. Automatic Data Processing systems will be grounded according to the grounding requirements of the *National Electrical Code* (NEC) (NFPA 70, Article 250.

1.6 ENVIRONMENTAL REQUIREMENTS

A. Design the hardware interfaces to operate at a design altitude of 7,500 ft above sea level and in the general environmental conditions specified in Section 01 8116, "Facility Environmental Requirements." Seismic requirements are located in Section 13 4800, "Sound, Vibration, and Seismic Control."

B. Furnish conditioning equipment as required to meet supplier's environmental requirements.

C. Hardware interfaced located in the control room shall be protected against direct spraying by the fire suppression system.

D. Hardware interfaces in the process areas of the facility shall be NEMA 4X rated for protection against corrosives.

1.7 RECORDS

A. Furnish complete spare parts lists, operating instruction, and maintenance literature.

B. Provide record drawings as required by the general subcontract requirements.

C. Supply hardware interface device software and configuration management type tools as applicable:

1. Verified listing of parameter values for each device required to comply with individual device datasheets.

2. Licensed copies of all specialty software needed for controlled configuration.

3. Miscellaneous hardware such as cables, dongles, keys, configuration or calibration tools, handheld programming or monitoring devices, or converters necessary to use any of the supplied devices or parameter entry.

D. Supply calibrations records for I/O module.

1.8 TESTING

A. Perform burn-in of process control hardware. Burn-in duration shall be 72 hours, minimum, unless otherwise approved by LANL. Submit results of the burn-in per Paragraph 1.4A.2.a.

B. Submission of calibration certificate per Paragraph 1.4A.2.a is sufficient for validating functionality and configuration of input/output modules.

C. Verify all wiring by 100 percent point-to-point continuity test. Submit results per Paragraph 1.4A.2.a.

D. Verify all network wiring by Time Domain Reflectometry. Submit results per Paragraph 1.4A.2.a.

E. Verify node or network drop communication. Submit results per Paragraph 1.4A.2.a.

F. Subcontractor is solely responsible for furnishing test apparatus, tools and equipment required to perform these tests.

1.9 TRAINING

A. Provide 20 hours of training to cover all general aspects of instrumentation installation, wiring, calibration techniques, programming, configuration management of devices, and parameter entry.

B. Provide 200 hours startup support to LANL startup and commissioning personnel. Support functions to include troubleshooting, point verification, performance trending, and sequence of operation verification.

C. Provide 40 hours of onsite training during the warranty period. The Subcontractor shall provide this training at the request of LANL.

1.10 SERVICE AND WARRANTY

A. For process control hardware, provide one-year warranty including travel costs.

B. If the manufacturer has a standard warranty that exceeds one year then the longer warranty shall be provided.

C. Manufacturer of hardware interfaces shall provide software updates for those interfaces for five years.

D. Subcontractor shall integrate hardware interfaces to control network infrastructure. Subcontractor is solely responsible for ensuring a complete and operating system.

E. Subcontractor is solely responsible for ensuring that software updates shall not cause the control network performance to be degraded.

F. Any software update installed on a hardware interface shall not conflict with that hardware interface, or other hardware interfaces connected to the control network and their associated software or firmware.

G. All software updates shall be fully compatible with the control network.

H. Any software update interface that is found to degrade control network performance, or is otherwise incompatible with the control network, or conflicts with other hardware interfaces also on the control network shall be replaced or updated at the sole expense of the subcontractor.

PART 2 PRODUCTS

2.1 PRODUCT OPTIONS AND SUBSTITUTIONS

A. Refer to Section 01 2500, "Substitution Procedures."

2.2 PROCESS CONTROL HARDWARE

A. Process Control Panels and Hardware

1. Manufacturer: Hoffman (see Attachment 1)

a. Floor-mounted, two-door, 6x6 ft PLC/RIO cabinet Model A74H7212P3PT.

B. Process Control Input/Output Modules

1. Manufacturer: Allen-Bradley (see Attachment 2)

   a. Analog Input Module Model 1756-IF16,
   b. RTD Module Model 1756-IR6I,
   c. Analog Output Module Model 1756-OF8,
   d. Discrete Input Module Model 1756-IB16I,
   e. Discrete Output Module Model 1756-OB16I,
   f. Relay Output Module Model 1756-OW16I,
   g. Empty Slot Cover 1756-N2,
   h. Removable Terminal Block – Screw clamp with 20-pin connection, Model 1756-TBNH, and
   i. Removable Terminal Block – Screw clamp with 36-pin connection, Model 1756-TBCH.

C. Process Control Networks

1. Cabled Process Control Networks

   a. Manufacturer: Allen-Bradley (see Attachment 2)

      1) Ethernet Bridge Module Model 1756-ENBT.

2. Managed Ethernet Switches

   a. Manufacturer: Cisco
   b. Model: SFE 2000.

3. Unmanaged Media Converter

   a. Manufacturer: N-Tron.
   b. Model: 202MC-ST.
   c. ST connection.

4. Protocol Translater

   a. Manufacturer: Red Lion Controls.
   b. Model: DSPLE000.

D. Process Control Mounting Racks and Support

1. Manufacturer: RackSolutions (see Attachment 3)

   a. Network Rack Model 151-37U.

E. Process Control Wiring

1. ModBus: EIA Industrial RS485 1tsp, 22 AWG, CM

   a. Manufacturer: Belden.
   b. Model No.: 3105A.

2. I/O Cable: 12 tsp, 18 AWG, .737 Dia, 300V Power Limited Tray Cable

   a. Manufacturer: Belden.
   b. Model No.: 1477A.

3. RTD Cable 3 conductor, shielded, 18 AWG

   a. Manufacturer: Belden.
   b. Model No.: 8770.

4. Ethernet Fiber Cable: 12 strand, 62.5 nm Indoor/Outdoor/Riser, armor clad

   a. Manufacturer: Corning.
   b. Model: FREEDM LST.

5. Ethernet Cable: Category 5e, 4 tp, 24 AWG, CMP

   a. Manufacturer: Belden.
   b. Model: 1585LC.
   c. Non-Plenum, Oil resistant PVC Model: 11700A.

6. Packaged Equipment Communications Cable:

   a. To be provided by packaged equipment vendor.

7. 24 V dc Instrument Power Cable: 1UTP, 16 AWG, 300V Power Limited Tray Cable

   a. Manufacturer: Belden.
   b. Model: 1035A.

F. Process Control Conduit, Raceway, and Supports

1. Manufacturer: Panduit

   a. G2X4WH6, 2.25" X 3.1" Wireway.
   b. G3X3WH6, 3.25" X 3.1" Wireway.

G. Process Control Junction Boxes

1. Manufacturer: Hoffman (see Attachment 4)

   a. Wall-Mount Model: A363008LP.
   b. Wall-Mount Model: A16H12ALP.

H. Power supplies

1. Manufacturer: Allen Bradley

   a. Power supply model no.: 1606 XL 480E.

PART 3 EXECUTION

3.1 GENERAL

A. Provide all field hardware, control devices, conduit, wiring, etc. as specified in PART 2.

B. Install all aspects of the system in compliance with all applicable codes, regulations, and all related Subcontract documents.

C. Install all materials in accordance with the published manufacturer's recommendations without exception.

D. Where miscellaneous materials are required to complete an installation, supply the materials as defined in the relevant section of this specification. Install them under this section of this specification, unless otherwise noted.

E. Coordinate with other trades where installation of a particular component requires other trades to be involved.

F. All signal wiring requiring shielding shall have the shield terminated at the controller end only. Trim and insulate the shield wire at the device end.

G. Label all wiring with permanent labels indicating the point device identifier. Install a phenolic label mounted at the device indicating the device type and point identifier name.

H. Label all field devices with 1-in. by 3-in. phenolic labels. Labels shall include the point name and device name. Labels shall be glued, attached with screws, or stainless wire in the case of valves.

3.2 PROCESS CONTROL HARDWARE

A. Process Control Panels and Hardware

1. Drawing plans, schematics, and diagrams indicate general location and arrangement of enclosures and racks. Install as indicated, unless LANL approves deviations to layout.

2. Provide mounting bracket or plinth-type transition accessory.

3. All enclosures and junction boxes shall be tagged with a stainless-steel tag. The tag shall be a minimum 2 in. by 3 in. and embossed with 3/16-in. letters identifying the tag number and service, as a minimum.

4. All freestanding enclosures shall be equipped with a guarded incandescent light with integral receptacle and switch.

5. All signal wiring requiring shielding shall have the shield terminated at the controller end only. The shield wire shall be trimmed and insulated at the device end.

6. Panels shall have no exposed terminals that may be inadvertently touched. Plastic guard or similar protection shall be provided for all exposed terminals greater than 50V ac or 50V dc.

B. Process Control Input/Output Modules

1. Each point shall be checked by the subcontractor for voltage, short circuit, etc. prior to termination to the Removable Terminal Unit to prevent potential damage to the controller.

C. Process Control Networks

1. Work under this section to develop the control networks includes installation and troubleshooting of new media. Install media in a manner recommended by the manufacturer based on the environment, communications speed requirements, and distance.

2. Do not connect SCADA networks to any external networks. There should be no physical connection to the Internet.

D. The control network communicates over a local Ethernet network. Segments will be connected by Ethernet switches.

1. Process Control Cable

a. All wiring shall be installed in accordance with the NEC (NFPA 70).

b. Class I and Class II wiring shall be separated as defined in the NEC (NFPA 70, Article 725). All Class I circuits and all control or power circuits greater than 48V ac or 48V dc shall be run in a

metallic raceway. Conduit shall be run parallel with building lines in a neat professional manner and supported.

c. Class II wiring run in hollow walls and in accessible concealed areas may be run without conduit, as local codes permit. Cables run loose shall be tied to building structures no less than every 6 ft and bundled where possible. Care shall be taken to avoid chafing at points of connection to the building. Cables run in conduit shall be installed in the same manner required for Class I conduit runs

d. Circuits shall be installed in a neat and workmanlike manner. Cables and conductors installed exposed on the outer surface of ceiling and sidewall shall be supported by structural components of the building in such a manner that the cable or conductors will not be damaged by normal building use.

e. Class 1 circuits that extend aerially beyond one building shall also meet the requirements of NEC (NFPA 70, Article 225).

f. Class 1, Class 2, and Class 3 Circuit Identification. Class 1, Class 2, and Class 3 circuits shall be identified at terminal and junction locations in a manner that prevents unintentional interferences with other circuits during testing and servicing [NEC (NFPA 70, Article 450.3(4))].

g. Control and signal wiring external to the control panels and all power wiring shall conform to the equipment manufactures recommendations for the equipment it is connected to.

h. Power to the BAS shall be provided from dedicated circuits. Providing power to any BAS components from lighting circuits, receptacle circuits or any other circuit that serves other building general loads is unacceptable. Providing power from primary BAS control panels to controllers and sub-controllers is acceptable.

i. Control and signal wiring in control panels shall be restrained by plastic ties or ducts. Hinge wiring shall be secured at each end so that any bending or twisting will be around the longitudinal axis of the wire and the bend area shall be protected with a sleeve.

j. Arrange wiring neatly, cut to proper length, and remove surplus wire. Provide abrasion protection for any wire bundles which pass through holes or across edges of sheet metal.

k. Use manufacturer's recommended tool with the proper sized anvil, for all crimp terminations. No more than one wire may be terminated in a single crimp lug and no more than two lugs may be installed on a single screw terminal.

l. Wiring shall not be spliced or tapped except at device terminals or terminal blocks.

m. Provide wire markers on each conductor in the panel, at load connections, and at intermediate terminal blocks. Identify circuit with control wire number, as per drawings.

n. The subcontractor will be responsible for providing, installing, labeling, terminating, control and control power wiring as well as the communications system wiring.

o. Use the network to automate power saving features on all electronic equipment where feasible.

2. Process Control Conduit, Raceway, and Supports

a. The number and size of conductors in any raceway shall not be more than will permit dissipation of the heat and ready installation or withdrawal of the conductors without damage to the conductors or to their insulation [NEC (NFPA 70, Section 300.17)].

b. Multiconductor Control and/or Signal Cables Only. Where a ventilated cable tray 6' or less contains multiconductor control and/or signal cables only, the sum of the cross-sectional areas of all cable at any cross section shall not exceed 50 percent of the interior cross-sectional area of the cable tray [NEC (NFPA 70, Section 392.9(B))].

3.3 FIELD TESTING AND ADJUSTING EQUIPMENT

A. Testing: The Subcontractor shall provide personnel, equipment, instrumentation, and supplies necessary to perform site testing. LANL will witness the testing, and written permission shall be obtained from LANL before proceeding with testing.

B. Data: Original copies of data produced, including the results of each test procedure, shall be turned over to LANL at the conclusion of each phase of testing prior to LANL approval of the test.

C. Test Procedures: The test procedures shall cover actual equipment and functions specified for the project.

Hoffman PLC / RIO Cabinets

Two Door Floor-Mounted Type 12 Enclosures

FLOOR-MOUNTED ENCLOSURES
Bulletin A12L

Application

Designed to protect electrical and electronic controls, components, and instruments in typical industrial environments. The UL Type 12 rating protects enclosed equipment from dust, dirt, oil, and dripping water. These enclosures are used in machine tool applications for housing motor starters, drives, contactors, and PLCs, as well as a wide variety of other electrical and electronic equipment found in the automotive, pulp and paper, wood products, textile, and similar industries.

Construction

- Seams continuously welded and ground smooth; no holes or knockouts
- Gasketed overlapping doors with no center post
- 3-point latch mechanism operated by oiltight key-lock handle
- Latch rod rollers for easy door closing
- Heavy-gauge continuous hinges support each door
- Data pocket is high-impact thermoplastic
- 12-in. floor stands welded to enclosure
- Heavy-duty lifting eyes
- Panel supports
- Oil-resistant gasket
- Collar studs for mounting optional panel
- Bonding provision on door
- Provision for mounting fluorescent light

Finish

White polyester powder paint inside with ANSI 61 gray polyester powder paint outside over phosphatized surfaces. Optional panels have white or conductive finish.

Industry Standards

UL 508A, File No. E61997: Type 12
NEMA/EEMAC Type 12
JIC standard EGP-1-1967
CSA, File No. 42186, Type 12
IEC 60529, IP55

Accessories

See also Accessories chapter.

Blower Package
Door Stop Kit (ADSTOPK)
Drip Shield Kit
Electric Heaters
Electrical Interlocks
Enclosure Stabilizers
External Data Pockets
Fan Cooling Products
Folding Shelf
INTERSAFE® Data Interface Ports
Lighting Kit
Panel Support Kit
Panels
Touch-Up Paint (ATPPY61)
Window Kit

Modification Services Program

You can customize this product to your unique requirements by specifying from these options:

- Enclosure height, width, depth
- Over 100 standard finish colors and textures
- Holes and cutouts in body, doors, subpanels
- Tapped holes, fasteners, mounting channel in enclosure or subpanel
- Mounting
- Doors
- Subpanels
- Structural changes
- Environmental control (louvers, fans, filters)
- Windows
- Standard accessories

To order, contact your local Hoffman sales representative.

NOTE: For information about modifications outside the scope of the Modification Services program, contact your Hoffman sales representative.

Standard Sizes Two-Door Floor-Mounted Type 12 Enclosures

Catalog Number	A x B x C (in.)	A x B x C (mm)	Gauge	Panel Catalog Number	Conductive Panel Catalog Number	Panel Gauge	Panel Size D x E (in.)	Panel Size D x E (mm)	Stiffener (in.)	Stiffener (mm)
A54208LP	54.00 x 42.00 x 8.00	1372 x 1067 x 203	12	A54P42	A54P42G	12	50.00 x 38.00	1270 x 965	16.00	381
A48488LP	80.06 x 48.06 x 8.06	1539 x 1221 x 205	12	A60P48	A60P48G	10	56.00 x 44.00	1422 x 1118	16.00	381
A48488LP	80.06 x 48.06 x 10.06	1539 x 1221 x 255	12	A60P48	A60P48G	10	56.00 x 44.00	1422 x 1118	16.00	381
A60608LP	80.06 x 60.06 x 10.06	1539 x 1528 x 255	12	A60P60	A60P60G	10	56.00 x 56.00	1422 x 1422	21.00	533
A72608LP	72.06 x 60.06 x 10.06	1830 x 1528 x 255	12	A72P60	A72P60G	10	68.00 x 56.00	1727 x 1422	21.00	533
A72721LP	72.06 x 72.06 x 10.06	1830 x 1830 x 255	12	A72P72	A72P72G	10	68.00 x 68.00	1727 x 1727	24.00	610
A48488LP	80.06 x 48.06 x 12.06	1539 x 1221 x 305	12	A60P48	A60P48G	10	56.00 x 44.00	1422 x 1118	16.00	381
A60608LP	80.06 x 60.06 x 12.06	1539 x 1528 x 305	12	A60P60	A60P60G	10	56.00 x 56.00	1422 x 1422	21.00	533
A72608LP	72.06 x 60.06 x 12.06	1830 x 1528 x 305	12	A72P60	A72P60G	10	68.00 x 56.00	1727 x 1422	21.00	533
A72721LP	72.06 x 72.06 x 12.06	1830 x 1830 x 305	12	A72P72	A72P72G	10	68.00 x 68.00	1727 x 1727	24.00	610
A48488LP	80.06 x 48.06 x 16.06	1539 x 1221 x 408	12	A60P48	A60P48G	10	56.00 x 44.00	1422 x 1118	16.00	381

Subject to change without notice PH 763 422 2211 • FX 763 422 2600 • www.hoffmanonline.com © 2007 Hoffman Enclosures Inc.

Allen-Bradley I/O Modules

1756 CONTROLLOGIX I/O

1756 ControlLogix I/O Modules

The ControlLogix architecture provides a wide range of input and output modules to span many applications, from high-speed digital to process control. The ControlLogix architecture uses producer/consumer technology, which allows input information and output status to be shared among multiple ControlLogix controllers.

Each ControlLogix I/O module mounts in a ControlLogix chassis and **requires** either a removable terminal block (RTB) or a 1492 interface module (IFM) to connect all field-side wiring. RTBs and IFMs are not included with the I/O modules. They must be ordered separately.

Digital I/O

The 1756 digital I/O modules support these features.

- Variety of voltage interface capabilities
- Isolated and non-isolated module types
- Point-level output fault states
- Direct-connect or rack-optimized communication
- Field-side diagnostics on select modules

In addition, you can select these types of digital I/O modules.

Digital I/O Type	Description
Diagnostic	These modules provide diagnostic features to the point level. These modules have a D at the end of the catalog number.
Electronic fusing	These modules have internal electronic fusing to prevent too much current from flowing through the module. These modules have an E at the end of the catalog number.
Individually isolated	These modules have individually isolated inputs or outputs. These modules have an I at the end of the catalog number.

1756 Digital dc Input Modules

Cat. No.	Number of Inputs	Voltage, On-State Input, Nom.	Operating Voltage	Input Delay Time, ON to OFF	Current, On-State Input, Min.	Current, On-State Input, Max.	Current, Off-State Input, Max.	Removable Terminal Block Housing	Backplane Current (mA) at 5V	Backplane Current (mA) at 24V	Power Dissipation, Max.
1756-IB16	16	12/24V dc sink	10...31.2V dc	2 ms hardware filter time (0, 1, 2, 9, or 18 ms)	+2.0 mA @ 10V dc	10 mA @ 31.2V dc	1.5 mA	1756-TBNH 1756-TBSH	100 mA	2 mA	5.1 W @ 60 °C
1756-IB16I	16 individually isolated	12/24V dc sink/source	10...30V dc	4 ms hardware filter time (0, 1, 2, 9, or 18 ms)	+2 mA @ 10 V dc	10 mA @ 30V dc	1.5 mA	1756-TBCH 1756-TBS6H	100 mA	3 mA	5 W @ 60 °C

1756 Digital dc Output Modules

Cat. No.	Number of Outputs	Voltage Category	Operating Voltage	Output Current Rating, per Point, Max.	Output Continuous Current per Module, Max.	Removable Terminal Block Housing	Backplane Current (mA) at 5V	Backplane Current (mA) at 24V	Power Dissipation, Max.
1756-OB8	8	12/24V dc source	10...30V dc	2.0 A @ 60 °C	8.0 A @ 60 °C	1756-TBNH 1756-TBSH	165 mA	2 mA	2.5 W @ 60 °C
1756-OB8I	8 individually isolated	12/24V dc source	10...30V dc	2.0 A @ 60 °C	16.0 A @ 60 °C	1756-TBCH 1756-TBS6H	165 mA	2 mA	4.6W A @ 60 °C
1756-OB16I	16 individually isolated	12/24V dc sink/source	10...30V dc	2 A @ 30 °C (Linear derating) 1 A @ 60 °C (Linear derating)	8 A @ 30 °C (Linear derating) 4 A @ 60 °C (Linear derating)	1756-TBCH 1756-TBS6H	350 mA	3 mA	3.6 W @ 60 °C

1756 Digital Contact Output Modules

Cat. No.	Number of Outputs	Output Delay Time, ON to OFF, Max.	Type of Contact Output	Operating Voltage	Output Current	Removable Terminal Block Housing	Backplane Current (mA) at 5V	Backplane Current (mA) at 24V	Power Dissipation, Max.
1756-OW16I	16 individually isolated	10 ms	16 N.O.	10...265V ac 5...150V dc	2 A @ 5...30V dc 0.5 A @ 48V dc 0.25 A @ 125V dc 2 A @ 125/240V ac	1756-TBCH 1756-TBS6H	150 mA	150 mA	4.5 W @ 60 °C

Analog I/O

The 1756 analog I/O modules support these features.

- On-board data alarming
- Scaling to engineering units
- Real-time channel sampling
- IEEE 32-bit floating point or 16-bit integer data formats

1756 Analog Modules

Cat. No.	Number of Inputs	Number of Outputs	Resolution	Sensors Supported	Removable Terminal Block Housing	Backplane Current (mA) at 5V	Backplane Current (mA) at 24V	Power Dissipation, Max.
1756-IF8	8 single-ended, 4 differential, 2 high-speed differential , ,	—	16 bits	±10.25V 0...5.125V 0...10.25V	1756-TBCH 1756-TBS6H	150 mA	40 mA	1.73 W - Voltage 2.33 W - Current
1756-IF6I	6 isolated	—	16 bits	±10.5V 0...5.25V 0...10.5V	1756-TBNH 1756-TBSH	250 mA	100 mA	3.7 W - Voltage 4.3 W - Current
1756-IF16	8 differential, 4 high-speed differential, 16 single-ended , ,	—	16 bits	±10.25V 0...5.125V 0...10.25V	1756-TBCH 1756-TBS6H	150 mA	65 mA	2.3 W - Voltage 3.9 W - Current
1756-IR6I	6 isolated RTD	—	16 bits	□ 100, 200, 500, 1000□ Platinum, alpha=385 □ 100, 200, 500, 1000□ Platinum, alpha=3916 □ 120□ Nickel, alpha=672 □ 100, 120, 200, 500□ Nickel, alpha=618 □ 10□ Copper	1756-TBNH 1756-TBSH	250 mA	125 mA	4.3 W
1756-IT6I	6 isolated thermocouple 1 CJC	—	16 bits	-12 mV... +78 mV -12 mV... +38 mV Thermocouples: B, E, J, K, R, S, T, N, C	1756-TBNH 1756-TBSH	250 mA	125 mA	4.3 W
1756-OF8	—	8 voltage or current	15 bits	—	1756-TBNH 1756-TBSH	150 mA	210 mA	4.92 W - 4 channel current

HART Smart Instrumentation

HART (Highway Addressable Remote Transmitter) is an open protocol designed to connect analog devices. For HART connectivity, select from products available from Rockwell Automation and our Encompass partners.

If Your Application has	Select	Description
• Analog and HART connectivity in one module • No external hardware required to access HART signal • HART commands can be transmitted as unscheduled messages • Supports asset management software to HART device	1756-IF8H 1756-OF8H	Rockwell Automation analog I/O modules
• Data acquisition or control application with slow update requirements (such as a tank farm) • No external hardware required to access HART signal • Does not connect directly to asset management software	MVI56-HART	Prosoft interface
• Analog and HART in one module • Instrumentation in hazardous locations (FLEX Ex modules) • HART commands can be transmitted as unscheduled messages • Directly connects asset management software to HART devices	1794 FLEX I/O 1797 FLEX Ex I/O	There are specific FLEX I/O and FLEX Ex modules designed for HART systems. These catalog numbers end in an H, such as 1797-IE8H.

HART Interface Modules Specifications

Cat. No.	Number of Inputs	Number of Outputs	Resolution	Sensors Supported	Removable Terminal Block Housing	Backplane Current (mA) at 5V	Backplane Current (mA) at 24V	Power Dissipation, Max.
1756-IF8H	8 voltage or current	—	16 bits	±10.25V 0...5.125V 0...10.25V	1756-TBCH 1756-TBS6H	200 mA	230 mA	3.21 W voltage 4.01 W current
1756-OF8H	—	8 voltage or current	15 bits across 21mA...650nA/bit 16 bits across 10.4V...320V/bit	—	1756-TBNH 1756-TBSH	300 mA	70 mA	4.92 W - 8 channel current

Removable Terminal Blocks

Removable terminal blocks (RTBs) provide a flexible interconnection between your plant wiring and 1756 I/O modules. The RTB plugs into the front of the I/O module. The type of module determines which RTB you need. You can choose screw-clamp or spring-clamp RTBs.

RTBs are not shipped with I/O modules. You must order them separately. The standard housing on the front of the wiring arm is not deep enough for 2.5 mm^2 (14 AWG) wiring. If you plan to use 2.5 mm^2 (14 AWG) wiring, also order the extended housing.

1756 Removable Terminal Blocks

Cat. No.	Description	Weight
1756-TBSH	spring-clamp with 20-pin connection	0.1 kg (0.3 lb)
1756-TBNH	screw-clamp with 20-pin connection	0.1 kg (0.3 lb)
1756-TBCH	screw-clamp with 36-pin connection	0.1 kg (0.3 lb)
1756-TBS6H	spring-clamp with 36-pin connection	0.1 kg (0.3 lb)
1756-TBE	extended housing; required for additional wiring space if using 14 AWG wiring	0.05 kg (0.1 lb)

RackSolutions Network/Server Rack

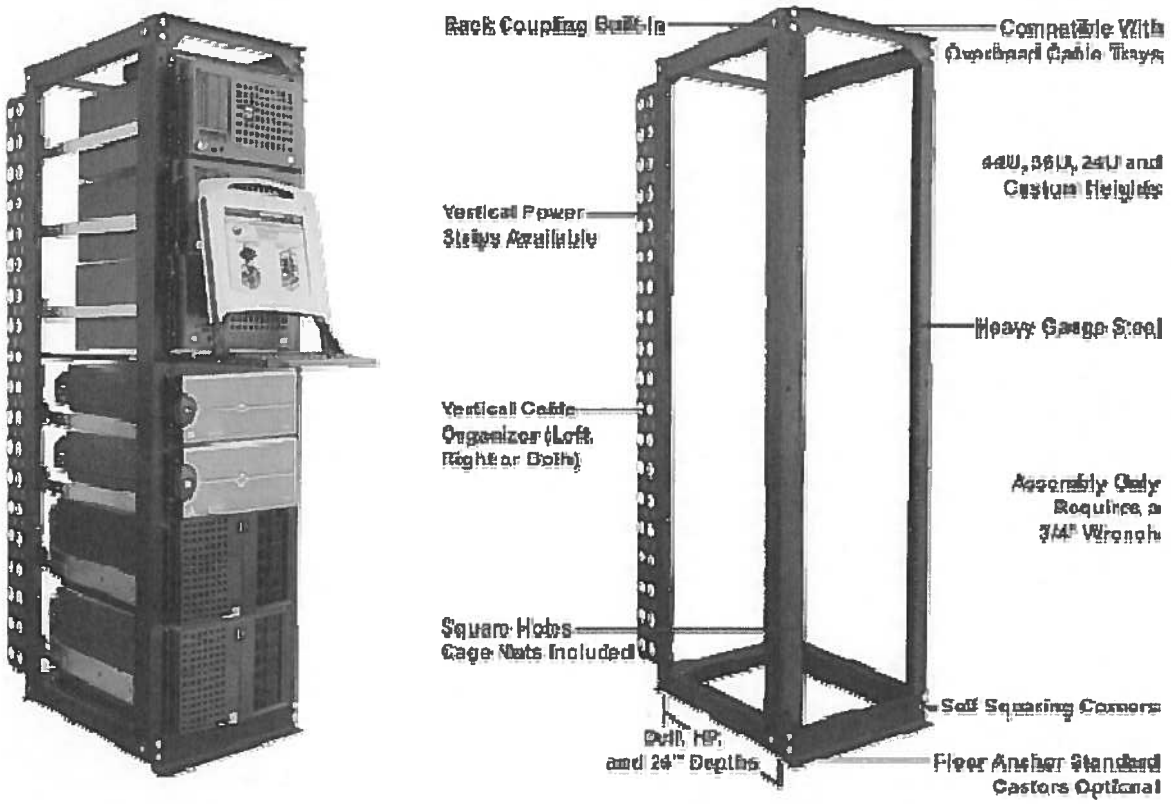

Hoffman Instrument Junction Boxes

CONCEPT®, Type 4, 12

WALL-MOUNTED ENCLOSURES
Bulletin
CWI

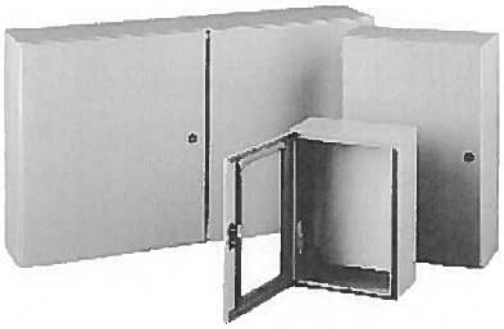

Industry Standards

Wall-mounting brackets required to maintain UL/CSA external mounting requirement.

CONCEPT solid single-door, door with window and flush-mount models

UL 508A Listed; Type 4, 12; File No. E61997
NEMA/EEMAC Type 4, 12, 13
CSA, File No. 42186: Type 4, 12
VDE IP66
IEC 60529, IP66

CONCEPT two-door models

UL 508A Listed; Type 12; File No. E61997
NEMA/EEMAC Type 12
CSA, File No. 42186, Type 12
VDE IP 55
IEC 60529, IP55

Application

CONCEPT® Enclosures are ideal for machine control applications. With streamlined styling, flush quarter-turn latches and an attractive, durable finish, CONCEPT Enclosures are available with solid or window single doors and in two-door landscape, flush-mount and sloped-top models for application and mounting flexibility. Two-door landscape models provide full-width access and easy panel installation.

Specifications

- 14, 16 or 18 gauge steel (see table)
- Seams continuously welded and ground smooth
- Corner-formed doors
- Simple easy-to-remove and install hinge pins with built-in captivation clip
- High-torque threadless studs and fasteners on door
- Minimum-width body flange provides maximum door opening (210 degrees)
- Formed body flange trough excludes liquids and contaminants
- Panel mounting studs fit optional CONCEPT panels and other accessories
- Mounting holes in back of body for optional external wall-mount brackets
- Hidden hinges for clean, aesthetic appearance
- Doors are interchangeable and easily removed by pulling captive hinge pins
- Seamless foam-in-place gasket provides oiltight and dusttight seal against contaminants
- Quarter-turn slotted latch(es)
- Door alignment device on doors wider than 30 in.
- Four hinges on 60-in.-high enclosures
- Grounding stud on body; bonding provision on door (except window-door models)
- Provisions for thermoplastic data pocket (right door on two-door models)
- Hardware kit with panel mounting nuts, panel grounding hardware and sealing washers for wall mounting holes
- Single-door enclosures have a three-point latch system on enclosures where A = 42-in. or more furnished with flush, slotted insert. Optional handles or inserts are available.
- Single-door enclosures with windows have a clear polycarbonate window flush with door surface
- Mounting frame on flush-mount enclosures extends completely around enclosure
- Two-door enclosures have a patented overlapping door design which provides full-width access
- Two door enclosures have a three-point latch system on right door furnished with flush slotted insert
- Illustrated instruction sheet included

Finish

Two standard finishes are available over phosphatized surfaces: ANSI 61 gray polyester powder paint inside and out or RAL 7035 textured light-gray polyester powder paint inside and out. Optional panels have white or conductive finish.

Patents

This product is covered by the following patents:
US D360,345
US 5,509,703
US 5,666,695
DE 9405854.7
EP 0729541
Other patents pending

Accessories

Data Pocket (except window door style)
Handles and Latches
Key Inserts
Non-metallic door bar with pressure sensitive adhesive
Panels (see tables)
Pole Mounting Kit
Wall-Mounting Bracket Kit
(required to maintain UL/CSA external mounting requirement)

Modification and Customization

Hoffman excels at modifying and customizing products to your specifications. Contact your local Hoffman sales office or distributor for complete information.

Subject to change without notice PH 763 422 2211 • FX 763 422 2600 • hoffmanonline.com © 2008 Hoffman Enclosures Inc.

END OF SECTION

SECTION 40 9600

PROCESS CONTROL SOFTWARE

PART 1 GENERAL

1.1 SCOPE

A. This section includes the specification for development of the process control software.

B. It is the intent of this section to procure, install, connect, program, and test as necessary the selected control programs as shown in the system drawings. Some controls are specified in other portions of the subcontract documents. It is the responsibility of the bidder to read and conform to all sections of this specification, review all subcontract drawings of all divisions, and coordinate with all equipment suppliers of material specified under other sections of this specification.

C. The engineering, installation supervision, start up, testing, and checkout necessary for the process control software shall be provided under this section.

D. Provide the necessary materials and manpower to participate in the testing, adjusting, and balance and the commissioning process as required by those sections of this specification.

1.2 SECTION INCLUDES

A. Custom application for Programmable Logic Controllers.

B. Custom Human Machine Interface including graphic screens, macros and VBA applications, data collection, reports, and trends.

C. Process Control Software Input/Output Lists.

D. Process Control Software Logic Diagrams.

E. Process Control Software Loop Diagrams.

F. Process Control Software Instrument Scaling and Alarm Lists.

1.3 RELATED SECTIONS

A. Section 01 2500, "Substitution Procedures."

B. Section 01 4000, "Quality Requirements."

C. Section 01 6000, "Product Requirements."

D. Section 01 4200, "Abbreviations and Acronyms, Definitions, and References."

E. Section 25 5000, "Integrated Automated Facility Controls."

1.4 ABBREVIATIONS AND ACRONYMS, DEFINITIONS, AND REFERENCES

A. Refer to Section 01 4200, "Abbreviations and Acronyms, Definitions, and References."

1.5 SUBMITTALS

A. Provide the following in accordance with the requirements of Exhibit I and the timeline specified.

1. Before Fabrication:

a. Documentation of International Organization for Standardization (ISO 9001) certification (if applicable).

b. Provide a copy of the subcontractor's Quality Assurance Plan. The plan describes the software lifecycle from the development of requirements, to design implementation, testing, operation and maintenance, and retirement for Los Alamos National Laboratory (LANL) approval by LANL prior to contract award

c. A copy of the configuration management plan that shows how software changes are identified, implemented, controlled, and documented.

d. Software requirements specification including a compliance matrix identifying each requirement and a reference to how it will be met.

e. A design guide(s) for programmable logic controller (PLC) and human-machine interface (HMI) that describes the software platform and the general layout of the custom application. Also include any standards and templates used to ensure consistency throughout the software.

f. A verification and validation test plan identifying how each requirement criterion will be satisfied.

g. Design phase iteration of the software lifecycle document that identifies test cases to be utilized during the testing phase of the software lifecycle and links steps in the test plan with software requirements.

Note: The software lifecycle document is a living document and it is understood that multiple revisions of this document will be submitted as phases of the software life cycle are completed.

2. Before Shipment:

a. An input/output list identifying the input/output by type [i.e., analog, discrete, relay, thermocouple, resistance temperature detector (RTD), or network] and listing each module assignment.

b. An Interlock table identifying the source instrument and alarm, and the resulting actions and affected devices.

c. Testing phase iteration of the software lifecycle document that identifies results of test cases and the revision of program and supporting software packages that produced the results.

d. Manufacturer's operating procedures, including safety and troubleshooting procedures, for digital process controllers, process control hardware, and process control software.

3. With Shipment:

a. Process Control Software: Provide 2 CD copies of the custom software for the PLC and HMI. Include all files needed to completely recreate the custom software on a new installation.

b. Provide run-time and development platforms needed to operate and edit/configure the custom software. Include all licenses and keys needed for the software to function.

c. A verification and validation test report with signatures, dates, times, and results of the verification and validation test.

d. A Computer Software Users Document (CSUD) that explains how the operator will interface with the software.

e. Computer Software Design Description (CSDD) for Radioactive Liquid Waste (RLW) Facility Control System (FCS) interlocks, hardware, network architecture, and configuration.

1) Describe the interaction of programmable logic controllers, input/output subsystems and the HMI network components.

2) Describe philosophies, standards, and operating policies used for developing the FCS application software.

3) Describe maintenance requirements including testing and calibration for non-TSR functions at prescribed intervals.

4) Describe maintenance as required to provide assurance that the FCS is able to perform its functions.

1.6 QUALITY ASSURANCE

A. Seller's Quality Assurance Requirements:

1. Work Identified in this section shall be done under a Quality Assurance Program in accordance with Section 01 4000, "Quality Requirements."

2. Design, implementation, and testing of software shall be performed in accordance with Section 01 4000, "Quality Requirements."

B. Receipt Inspection:

1. Generally, all equipment and accessories installed under this subcontract shall be inspected by the subcontractor in the presence of the LANL Startup and Commissioning Representative and approved before acceptance. The subcontractor shall be responsible for all repairs as required.

2. Documentation will be reviewed by a qualified Subcontractor Quality Control Inspector to determine that the required documentation as specified in Section 1.5 is present and traceable to the process control software.

C. Storage and Handling:

1. Process control software packages shall be handled with reasonable care to prevent damage to them before installation.

2. Deliver to site in clean and dry condition.

D. Personal Qualification – Provide proof of the following:

1. Subcontractor shall have prior experience in programming control systems for a nuclear facility.

2. Subcontractor shall have programmed a control system of equivalent or greater complexity than the RLWTF application. Complexity of the program shall be gauged by the number of I/O points. A minimum of 300 I/O points are required.

3. Subcontractor shall have prior experience in developing software life cycle documents in accordance with Section 01 4000, "Quality Requirements."

E. Nonconformance:

1. Nonconformance of software shall be documented and corrected before shipment. If found on receipt, nonconformance shall be documented and corrected before installation at the expense of the subcontractor in accordance with Section 01 4000, "Quality Requirements."

1.7 ENVIRONMENTAL REQUIREMENTS

A. None.

1.8 RECORDS

A. Furnish complete operating instruction, and maintenance literature.

B. Record (software) applications shall be provided, as required, by the general Contract requirements. Record applications shall not be completed until after installation is complete. Any changes made during installation shall be controlled according to the subcontractor's software configuration management plan. Configuration records shall be available at all times for inspection by the LANL Subcontract Technical Representative (STR).

C. After final occupancy and all debugging have occurred, the subcontractor shall prepare two copies of all project-specific control software on nonvolatile computer recording media (CD) and deliver them to the LANL Startup and Commissioning representative via the STR.

1.9 TESTING

A. All process control software shall be subjected to burn-in. Burn-in duration shall be 72 hours, minimum, unless otherwise approved by LANL.

B. Test custom software for programmable controllers and human machine interfaces according to a verification and validation test plan approved by the seller. A matrix relates each criterion tested to a requirement.

C. Plan and perform field testing in accordance with Exhibit I and the Test and Acceptance Criteria Plan (60239831-TRPT-003).

1.10 TRAINING

A. Provide 40 hours of training to include a high-level description of the FCS software interfaces to familiarize operator personnel with the FCS user interfaces.

B. Provide 200 hours startup support to LANL operating personnel. Support functions to include troubleshooting, point verification, performance trending, and sequence of operation verification.

1.11 SERVICE AND WARRANTY

A. None.

PART 2 PRODUCTS

2.1 PRODUCT OPTIONS AND SUBSTITUTIONS

A. Refer to Section 01 2500, "Substitution Procedures."

2.2 PROCESS CONTROL SOFTWARE

A. General Custom Software Requirements

1. Provide a complete and operable Facility Control System having the communication, programming and control capabilities necessary to support all functions and points specified by loop diagrams and network communicated points identified in Attachment 1.

2. Program the software to provide the functions specified in project record documents including:

a. LANL's *Engineering Standard Manual* (ESM) (ISD 341-2, Chapter 8, "Instrumentation and Controls," (Rev. 3).

b. LANL's ESM, STD-342-100, *ESM*.

c. Drawing C55864, Sheet D-6010, "Influent Filter System Roughing Filters P&ID."

d. Drawing C55864, Sheet D-6011, "Reaction/Precipitation System Mixing Chamber P&ID."

e. Drawing C55864, Sheet D-6012, "Reaction/Precipitation System TK-1101 P&ID."

f. Drawing C55864, Sheet D-6013, "Reaction/Precipitation System TK-1102 P&ID."

g. Drawing C55864, Sheet D-6014, "Microfiltration System Microfilter P&ID."

h. Drawing C55864, Sheet D-6015, "Microfiltration System Clean-In-Place Skid P&ID."

i. Drawing C55864, Sheet D-6016, "Reverse Osmosis System TK-1301 P&ID."

j. Drawing C55864, Sheet D-6017, "Reverse Osmosis System P-1302A P&ID."

k. Drawing C55864, Sheet D-6018, "Reverse Osmosis System Reverse Osmosis Arrays P&ID."

l. Drawing C55864, Sheet D-6019, "Reverse Osmosis System TAC-4302 P&ID."

m. Drawing C55864, Sheet D-6020, "Reverse Osmosis System TK-1304 P&ID."

n. Drawing C55864, Sheet D-6021, "Polishing System Pump and FLT-1401 P&ID."

o. Drawing C55864, Sheet D-6022, "Polishing System FLT-1043 and FLT-1405 P&ID."

p. Drawing C55864, Sheet D-6023, "Solids Collection & Concentration System TK-1707 and Pump P&ID."

q. Drawing C55864, Sheet D-6024, "Solids Collection & Concentration System Rotary Filter P&ID."

r. Drawing C55864, Sheet D-6025, "Solids Collection & Concentration System TK-1702 and Pump P&ID."

s. Drawing C55864, Sheet D-6026, "Solids Collection & Concentration System TK-1704 and Pump P&ID."

t. Drawing C55864, Sheet D-6027, "Solids Collection & Concentration System TK-1703 and Pump P&ID."

u. Drawing C55864, Sheet D-6028, "De-Watering System TK-1705 and Pump P&ID."

v. Drawing C55864, Sheet D-6029, "De-Watering System EVAP-1701, EVAP-1702 P&ID."

w. Drawing C55864, Sheet D-6030, "De-Watering System TK-1706 and Pump P&ID."

x. Drawing C55864, Sheet E-6140, "Control System Block Diagram."

y. Drawing C55864, Sheet E-6141, "LLW Process Control Logic Diagram."

z. Drawing C55865, Sheet M-1200, "Plan View."

aa. Drawing C55864, Sheet M-6003, "Chilled Water System P&ID."

bb. Drawing C55864, Sheet M-6004, "Process Cooling Water System P&ID."

cc. Drawing C55864, Sheet M-6005, "Heating Water System P&ID."

dd. Drawing C55864, Sheet M-6104, "Laboratory Area Ventilation Supply P&ID."

ee. Drawing C55864, Sheet M-6105, "Exhaust Ventilation P&ID."

ff. Drawing C55864, Sheet P-6004, "Sewer System P&ID."

gg. Drawing C55864, Sheet P-6006, "CAM and FAS P&ID."

hh. Drawing C55865, Sheet P-6200, "Natural Gas P&ID."

ii. Drawing C55865, Sheet P-6201, "Potable & Non-Potable Water P&ID."

jj. Drawing C55865, Sheet P-6202, "Compressed Air P&ID."

B. Programmable Logic Controller Custom Software Architecture

1. Program the software so that the loss of HMI will not affect the safe operation of equipment. Design automatic sequences so that HMI permission is required before beginning hazardous operations.
2. Program digital controls in ladder logic to aid troubleshooting.
3. Use function block programming for analog scaling and alarming.
4. Filter inputs to avoid nuisance alarms.
5. Latch alarms for at least 5 seconds to ensure the HMI registers a non-nuisance spike.
6. Program digital alarms so that a broken wire activates the alarm.
7. Program fail-safe outputs such that a broken wire places the output in the safe condition.
8. When the control system stops a machine due to a fault or interlock, cancel the start/run command so the machine does not automatically start when the fault is cleared.
9. The FCS will communicate with the Building Automation System (BAS) via dedicated BACnet protocol converter I/O modules located in the PLC backplane. The BAS software is specified in Section 25 5000, "Integrated Automated Facility Controls." The P&IDs identify the BAS instruments that are brought into the FCS HMI.

C. Human Machine Interface Custom Software Architecture

1. Design informational displays and user-interface interaction in accordance with NUREG 0700 and IEEE 1289.
2. When the workstation is booted up, the custom software will automatically launch and display a default screen with a default password.
3. Include a navigation block that is consistent on every screen. Operator will be able to navigate from any process or sequence screen to any other with no more than two clicks.
4. Provide a real-time graphic of the HMI, PLC and control system architecture. Depict on the graphic, the actual wiring configuration of all Remote I/O and Controllers on the network. Display real-time information regarding communications. Identify, on this graphic, any controller that has an alarm condition. If the size of the network prevents display of the entire network on one page, multiple graphic slides with connectors and "picks" may be employed.
5. Use standardized faceplates for equipment and standardized control blocks for sequences.
6. All valves or dampers, whether normally open or normally closed, shall be described as 0% when fully closed and 100% when fully opened as seen on the Web based GUI. Three-way control valves shall have a descriptive label on the GUI that clearly indicates the direction of flow when fully opened or closed.
7. Require two step confirmation of operator input.

8. Design the system so that equipment can only be controlled from one physical location at a time. If control over any equipment is transferred to a remote station, that station will have sole control over that equipment until control is returned.

9. Operator workstations shall include the following functionality:

   a. Display of plant equipment status and process parameters,
   b. Real-time trending and historical trending,
   c. Report generation,
   d. Alarm management,
   e. Data entry,
   f. Event logging, and
   g. Time synchronization between PLC and among workstations.

10. Show mimics of equipment grouped functionally on process displays, similar to a piping and instrumentation diagram.

11. Sequence screens will display steps completed, in progress and upcoming in a manner that allow the operator to follow them in conjunction with his procedures.

12. Follow the color conventions described in LANL's ESM (ISD 341-2, Chapter 8, Table 10-1).

13. Include an alarm block on each screen that shows at least the three most recent alarms. Provide a link to a full screen alarm summary.

14. Differentiate between new alarms, acknowledged alarms, and cleared unacknowledged alarms.

15. Alarms require specific operator response. Do not display unnecessary or redundant alarms or information as alarms.

16. Where feasible, use a process interlock or automatic response in lieu of an imminent alarm.

17. Suppress alarms that are not meaningful during specific operation or maintenance modes.

18. Major alarms shall initiate paging and email notification to designated LANL pagers and email utilizing the LANL e-mail/paging system.

19. Provide levels of Login security for view-only, operations, changing setpoints and administrative controls.

20. Data shall be updated at a rate that will not congest the network or impact ability of the control network to monitor or control any part of the process.

21. Include counters and runtime clocks to monitor trips, alarm condition repetition, and equipment life to support maintenance activities.

22. Data from the BAS will be displayed on the FCS HMI. BAS control setpoints will be operator-adjustable via the FCS HMI.

D. Process Control Software Input/Output Lists

1. Identify the number and type of points such as analog, discrete, RTD or thermocouple for each device.

2. Include the labels for each instrument junction box and cabinet, rack, module and channel associated with each I/O point. Make the labels consistent with other record documents.

E. Process Control Software Logic Diagrams

1. Draw Logic Diagrams to conform to LANL's ESM (ISD 341-2, Chapter 8, Appendix G).
2. Make logic diagrams conform to ISA-5.2-1992, *Binary Logic Diagrams for Process Operations*.
3. Make the logic flow, generally, from left to right and up to down. Use arrowheads where the flow of logic is not in the normal direction or where clarity is needed.
4. Use solid, right-angle lines to connect logic symbols. Use dots to indicate line connections.
5. Design the Control Logic Diagrams to have a one to one correlation with the control software to the greatest extent possible.
6. Include notes and references to clarify the specific and overall system function.
7. Process equipment will remain in, or return to, the original state after a loss and restoration of power, unless otherwise noted.
8. Identify instruments, control switches, and equipment. Make labels consistent with other record documents.
9. Use a typical drawing that identifies different device numbers for groups of equipment with equivalent control functions.
10. Provide references for related drawings or diagrams.
11. Do not use a term such as "Not open" to mean the same as "Closed".

F. Process Control Software Loop Diagrams

1. Draw Loop Diagrams to conform to LANL's ESM (ISD 341-2, Chapter 8, Appendix F).
2. Symbols used in instrument loop diagrams are provided in ANSI/ISA-5.1-2009 *Instrumentation Symbols and Identification* and ISA-5.3-1983 *Graphic Symbols for Distributed Control / Shared Display Instrumentation, Logic and Computer Systems.*
3. Draw each diagram to include one loop or, rarely, one set of interrelated loops.
4. All components, including wires, cables and junction boxes and terminals, should be clearly labeled and uniquely identified. Make the labels consistent with other record drawings.
5. Include word descriptions of loop functions. If the title is not sufficient, add supplemental notes. Describe special functions such and safety and shutdown circuits that are not obvious.
6. Identify the location of devices such as field, panel front , panel rear, rack and termination cabinet.

7. Show electrical power, air and hydraulic supplies, including the designated voltage and pressure values.

8. Identify supplemental drawings to show interrelations with other control loops. Interrelations include overrides, interlocks, and cascades.

9. Describe fail-safe action.

G. Process Control Software Instrument Scaling and Alarm Lists

1. Provide a spreadsheet listing all instruments controlled or monitored by the FCS

2. Provide a spreadsheet listing scaling parameters for analog instruments.

3. Provide a spreadsheet listing alarm setpoints (High, Low, Range, Rate-of-Change and Deadband) and the alarm messages displayed for each point with an alarm function. Include a note about special conditions such as when an alarm is suppressed.

PART 3 EXECUTION

3.1 GENERAL

A. Communicate with Operations to ensure that graphics and software command and monitoring operations are easy to understand and ergonomic.

3.2 PROCESS CONTROL SOFTWARE

A. Process Control Software Architecture

1. Load software required for the process control system, including databases, operational parameters, and system, command, and application programs. Adjust, tune, debug, and commission all software and parameters for controlled systems to assure proper operation in accordance with the sequences of operation and database tables.

2. Test, adjust, and commission (pre-functional test) each control loop and system and verify proper operation of each item in the sequences of operation, including hardware and software. Verify each instrumentation device connected to the control system by making a comparison between the reading at the device and the display at the workstation. LANL's technical rep may witness the pre-functional testing.

3. Provide personnel, equipment, instrumentation, and supplies necessary to perform functional testing. LANL's technical rep will witness functional testing.

4. Prepare test procedures for functional testing. The test procedure shall describe all tests to be performed and other pertinent information such as specialized test equipment required and the length of testing. The test procedures shall explain, in detail, step-by-step actions and the expected results, to demonstrate compliance with all the requirements of the drawings and this specification. The test procedure shall be site specific and based on the inputs and outputs, required calculated points and the sequence of control. The test shall demonstrate that the completed control system complies with the contract requirements. All physical and functional requirements of the project including communication

requirements shall be demonstrated and shown. Demonstrate that each system operates as required in the sequence of operation.

5. Functional testing as specified shall not be started until after receipt by the subcontractor of written permission from the LANL technical rep, based on the subcontractor's written report including certification of successful completion of installation testing, adjusting and commissioning as specified, and upon successful completion of training as specified.

6. Upon successful completion of functional testing, deliver test reports and other documentation as specified to LANL.

B. Process Control Software Programming

1. All software development shall be completed by programmers that are experienced in the programming and graphic development techniques of the Control system (i.e. RSLOGIX and FactoryTalk View SE).

2. Control system operating software and all support software shall be installed and configured on the appropriate server.

3. Complete installation of supplied operator names. During the training session, complete the input of login and passwords associated with those personnel.

4. Reports and Trends

   a. All associated I/O data as well as computational data shall be linked to the appropriate formatted report for automatic archiving on the server.

   b. Provide report capability for monitoring of each system. Custom reports and trends shall be easily configured by the operator for either printing or archiving. The operator shall be able to easily adjust the scale of the trend graphs and trend at least 3 separate points of the same type (analog with analog, binary with binary) on the same graph as he/she chooses. The trend graphics shall have a dynamic cursor option for identifying values of individual points on the trend graph.

Network Communicated I/O Points

Tagname	Description	Type	P&ID	Source
LIT-1131	Influent Storage Facility Tank 1 LLW Level	AI	C55864-D6010	Yellownet (Ethernet)
LIT-1132	Influent Storage Facility Tank 2 LLW Level	AI	C55864-D6010	Yellownet (Ethernet)
LIT-1133	Influent Storage Facility Tank 3 LLW Level	AI	C55864-D6010	Yellownet (Ethernet)
LIT-1134	Influent Storage Facility Tank 4 LLW Level	AI	C55864-D6010	Yellownet (Ethernet)
LIT-1135	Influent Storage Facility Tank 5 LLW Level	AI	C55864-D6010	Yellownet (Ethernet)
LIT-1136	Influent Storage Facility Tank 6 LLW Level	AI	C55864-D6010	Yellownet (Ethernet)
FIT-1131	Influent Storage Facility Tank 1 LLW Flow	AI	C55864-D6010	Yellownet (Ethernet)
FIT-1132	Influent Storage Facility Tank 2 LLW Flow	AI	C55864-D6010	Yellownet (Ethernet)
SC-1131	Influent Storage Facility Pump 1 Speed Control	AO	C55864-D6010	Yellownet (Ethernet)
SI-1131	Influent Storage Facility Pump 1 Speed Indication	AI	C55864-D6010	Yellownet (Ethernet)
SC-1132	Influent Storage Facility Pump 2 Speed Control	AO	C55864-D6010	Yellownet (Ethernet)
SI-1132	Influent Storage Facility Pump 2 Speed Indication	AI	C55864-D6010	Yellownet (Ethernet)
ZI-1214	Microfilter Permeate Outlet Valve Position Indication	DI	C55864-D6010	Microfilter
ZS-1214	Valve Position Switch	DI	C55864-D-6014	Microfilter
LAHH-1125	LLW Reaction Tank Level TK-1102	DI	C55864-D-6013	Microfilter
YI-1250	Recirculation Pump P-1201	DI	C55864-D-6013	Microfilter
FI-1206	Microfilter Outflow	AI	C55864-D-6014	Microfilter
XC-1250	Recirculation Pump P-1201	AO	C55864-D-6013	Microfilter
YI-1303	Reverse Osmosis Array Level	DI	C55864-D6010	ROU
PIT-4345	Reverse Osmosis Array P-4301 Outlet Pressure Indication	AI	C55864-D6010	ROU
HS-4301	Reverse Osmosis Array P-4301 Off/Enable	AI	C55864-D6010	ROU
LIT-4302	Reverse Osmosis Array CIP Tank Level	DI	C55864-D6010	ROU
YI-4301	PAC-4301 Run Indication	DI	C55864-D-6019	ROU
LAH-4302	TAC-4302 High Level Alarm	DI	C55864-D-6019	ROU
LI-4302	TAC-4302 Level Indication	AI	C55864-D-6019	ROU
PI-4345	PAC-4301 Outlet Pressure Indication	AI	C55864-D-6019	ROU
XC-4301	PAC-4301 Run Command	DO	C55864-D-6019	ROU
YI-1350	ROU P-1302	DI	C55864-D-6017	MCC-A
YI-1755	De-Watering System P-1706	DI	C55864-D-6030	MCC-A
XC-1350	ROU P-1302	DO	C55864-D-6017	MCC-A
XC-1755	De-Watering System P-1706	DO	C55864-D-6030	MCC-A
YI-1711	Solids Concentration P-1707	DI	C55864-D-6023	MCC-B
YI-1752	De-Watering System P-1705	DI	C55864-D-6028	MCC-B
YI-1750	Solids Concentration P-1703	DI	C55864-D-6027	MCC-B
SI-1406	Filter Aid Make-up P-1406 Speed Indication	AI	C55864-D-6021	MCC-B

Tagname	Description	Type	P&ID	Source
SI-1450	IXM Feed Pump P-1407 Speed Indication	AI	C55864-D-6021	MCC-B
XC-1711	Solids Concentration P-1707	AO	C55864-D-6023	MCC-B
XC-1752	De-Watering System P-1705	AO	C55864-D-6028	MCC-B
XC-1750	Solids Concentration P-1703	AO	C55864-D-6027	MCC-B
SC-1406	Filter Aid Make-up P-1407 Speed Control	AO	C55864-D-6021	MCC-B
SC-1450	IXM Feed Pump P-1407 Speed Control	AO	C55864-D-6021	MCC-B
PDAH-5361	HVA-5324 Differential Pressure Alarm High	DI	C55865-M-6200	BAS-1
TAH-5328	Vac Pump Room Temperature Alarm High	DI	C55864-M-6103	BAS-1
TAL-5328	Vac Pump Room Temperature Alarm Low	DI	C55864-M-6103	BAS-1
TAH-5327	Comm Room High Temperature Alarm High	DI	C55864-M-6102	BAS-1
TAL-5361	HVA-5324 Freezestat Alarm Low	DI	C55865-M-6200	BAS-1
TAL-5362	HVA-5324 Outlet Temperature Alarm Low	DI	C55865-M-6200	BAS-1
TAH-5362	HVA-5324 Outlet Temperature Alarm High	DI	C55865-M-6200	BAS-1
FI-5301	HVA-5322 Inlet Air Temperature	AI	C55864-M-6102	BAS-1
FI-5331	CAV-5331 Flow Indication	AI	C55864-M-6103	BAS-1
FI-5332	CAV-5332 Flow Indication	AI	C55864-M-6103	BAS-1
FI-5333	CAV-5333 Flow Indication	AI	C55864-M-6104	BAS-1
FI-5334	CAV-5334 Flow Indication	AI	C55864-M-6104	BAS-1
FI-5335	CAV-5335 Flow Indication	AI	C55864-M-6102	BAS-1
FI-5336	CAV-5336 Flow Indication	AI	C55864-M-6102	BAS-1
FI-5337	CAV-5337 Flow Indication	AI	C55864-M-6102	BAS-1
FI-5338	CAV-5338 Flow Indication	AI	C55864-M-6102	BAS-1
FI-5339	CAV-5339 Flow Indication	AI	C55864-M-6102	BAS-1
FI-5341	HVA-5321 Inlet Flow Indication	AI	C55864-M-6103	BAS-1
FI-5918	Stack Outlet Flow Indication	AI	C55864-M-6105	BAS-1
PDI-5310	FAH-5311 Differential Pressure Indication	AI	C55864-M-6104	BAS-1
PDI-5312	FAH-5312 Differential Pressure Indication	AI	C55864-M-6104	BAS-1
PDI-5313	FAH-5313 Differential Pressure Indication	AI	C55864-M-6103	BAS-1
PDI-5333	CAV-5333 Differential Pressure Indication	AI	C55864-M-6104	BAS-1
PDI-5334	CAV-5334 Differential Pressure Indication	AI	C55864-M-6104	BAS-1
PDI-5335	CAV-5335 Differential Pressure Indication	AI	C55864-M-6102	BAS-1
PDI-5336	CAV-5336 Differential Pressure Indication	AI	C55864-M-6102	BAS-1
PDI-5337	CAV-5337 Differential Pressure Indication	AI	C55864-M-6102	BAS-1
PDI-5338	CAV-5338 Differential Pressure Indication	AI	C55864-M-6102	BAS-1
PDI-5339	CAV-5339 Differential Pressure Indication	AI	C55864-M-6102	BAS-1
PDI-5344	HVA-5321 Differential Pressure Indication	AI	C55864-M-6103	BAS-1
PDI-5349	HVA-5321 Outlet to Atmosphere Pressure	AI	C55864-M-6103	BAS-1
PI-5358	Stack to Ref Air Differential Pressure	AI	C55864-M-6105	BAS-1
TI-5301	HVA-5322 Outside Air Temperature Indication	AI	C55864-M-6103	BAS-1
TI-5311	Process Area Temperature Indication	AI	C55864-M-6103	BAS-1
TI-5313	Wet Lab Room Temperature Indication	AI	C55864-M-6104	BAS-1

Tagname	Description	Type	P&ID	Source
TI-5314	Corridor Temperature Indication	AI	C55864-M-6104	BAS-1
TI-5315	Operations Center Temperature Indication	AI	C55864-M-6102	BAS-1
TI-5316	Electrical Room Temperature Indication	AI	C55864-M-6102	BAS-1
TI-5317	Men's Lavatory Temperature Indication	AI	C55864-M-6102	BAS-1
TI-5318	Lobby Room Temperature Indication	AI	C55864-M-6102	BAS-1
TI-5319	Women's Lavatory Temperature Indication	AI	C55864-M-6102	BAS-1
TI-5327	Comm Room Temperature Indication	AI	C55864-M-6102	BAS-1
TI-5328	Vac Pump Room Temperature Indication	AI	C55864-M-6103	BAS-1
TI-5331	CAV-5331 Outlet Temperature Indication	AI	C55864-M-6103	BAS-1
TI-5332	CAV-5332 Outlet Temperature Indication	AI	C55864-M-6103	BAS-1
TI-5333	CAV-5333 Outlet Temperature Indication	AI	C55864-M-6104	BAS-1
TI-5334	CAV-5334 Outlet Temperature Indication	AI	C55864-M-6104	BAS-1
TI-5335	CAV-5335 Outlet Temperature Indication	AI	C55864-M-6102	BAS-1
TI-5336	CAV-5336 Outlet Temperature Indication	AI	C55864-M-6102	BAS-1
TI-5337	CAV-5337 Outlet Temperature Indication	AI	C55864-M-6102	BAS-1
TI-5338	CAV-5338 Outlet Temperature Indication	AI	C55864-M-6102	BAS-1
TI-5339	CAV-5339 Outlet Temperature Indication	AI	C55864-M-6102	BAS-1
TI-5341	HVA-5321 Inlet Temperature Indication	AI	C55864-M-6103	BAS-1
TI-5346	HVA-5321 Filter Air Temperature Indication	AI	C55864-M-6103	BAS-1
TI-5347	HVA-5321 Outlet Temperature Indication	AI	C55864-M-6103	BAS-1
TI-5362	HVA-5324 Outlet Temperature Indication	AI	C55864-M-6200	BAS-1
SI-5351	Exhaust Fan FE-5309 Speed Indication	AI	C55864-M-6105	BAS-1
SI-5352	Exhaust Fan FE-5310 Speed Indication	AI	C55864-M-6105	BAS-1
YI-5323	PHW-5313 Running Indication	AI	C55864-M-6105	BAS-1
YI-5324	PHW-5314 Running Indication	AI	C55864-M-6105	BAS-1
TIC-5304	HVA-5322 Outlet Air Temperature Setpoint	AO	C55864-M-6102	BAS-1
PAL-5112	BHW-5101 Return Pressure Alarm Low	DI	C55865-M-6205	BAS-2
PAL-5113	BHW-5102 Return Pressure Alarm Low	DI	C55865-M-6205	BAS-2
TAL-5110	BHW-5101 Supply Temperature Alarm Low	DI	C55865-M-6205	BAS-2
TAH-5110	BHW-5101 Supply Temperature Alarm High	DI	C55865-M-6205	BAS-2
TAL-5111	BHW-5102 Supply Temperature Alarm Low	DI	C55865-M-6205	BAS-2
TAH-5111	BHW-5102 Supply Temperature Alarm High	DI	C55865-M-6205	BAS-2
TAL-5112	BHW-5101 Return Temperature Alarm Low	DI	C55865-M-6205	BAS-2
TAH-5112	BHW-5101 Return Temperature Alarm High	DI	C55865-M-6205	BAS-2
TAL-5113	BHW-5102 Return Temperature Alarm Low	DI	C55865-M-6205	BAS-2
TAH-5113	BHW-5102 Return Temperature Alarm High	DI	C55865-M-6205	BAS-2
TAL-5121	Hot Water Supply Temperature Alarm Low	DI	C55865-M-6205	BAS-2
TAH-5121	Hot Water Supply Temperature Alarm High	DI	C55865-M-6205	BAS-2
YA-5105	PHW-5105 Running Indication	DI	C55865-M-6205	BAS-2
YA-5106	PHW-5106 Running Indication	DI	C55865-M-6205	BAS-2
YA-5213	PCW-5213 Running Indication	DI	C55865-M-6204	BAS-2
YA-5214	PCW-5214 Running Indication	DI	C55865-M-6204	BAS-2

Tagname	Description	Type	P&ID	Source
YI-5101	PHW-5110 Running Indication	DI	C55865-M-6205	BAS-2
YI-5102	PHW-5111 Running Indication	DI	C55865-M-6205	BAS-2
FI-5121	Hot Water Supply Flow Indication	AI	C55865-M-6205	BAS-2
FI-5240	Chilled Water Supply Flow Indicaiton	AI	C55865-M-6203	BAS-2
PI-5110	BHW-5101 Supply Pressure Indication	AI	C55865-M-6205	BAS-2
PI-5111	BHW-5102 Supply Pressure Indication	AI	C55865-M-6205	BAS-2
PI-5121	Hot Water Supply Pressure Indication	AI	C55865-M-6205	BAS-2
PI-5255	Process Cooling Water Supply Pressure	AI	C55865-M-6204	BAS-2
TI-5100	Outside Air Temperature Indication	AI	C55865-M-6205	BAS-2
TI-5110	BHW-5101 Supply Temperature Indication	AI	C55865-M-6205	BAS-2
TI-5111	BHW-5102 Supply Temperature Indication	AI	C55865-M-6205	BAS-2
TI-5112	BHW-5101 Return Temperature Indication	AI	C55865-M-6205	BAS-2
TI-5113	BHW-5102 Return Temperature Indication	AI	C55865-M-6205	BAS-2
TI-5121	Hot Water Supply Temperature Indication	AI	C55865-M-6005	BAS-2
TI-5221	CWR-5201 Inlet Temperature Indication	AI	C55865-M-6203	BAS-2
TI-5223	CWR-5201 Outlet Temperature Indication	AI	C55865-M-6203	BAS-2
TI-5224	CWR-5202 Inlet Temperature Indication	AI	C55865-M-6203	BAS-2
TI-5226	CWR-5202 Outlet Temperature Indication	AI	C55865-M-6203	BAS-2
TI-5227	CWR-5203 Inlet Temperature Indication	AI	C55865-M-6203	BAS-2
TI-5229	CWR-5203 Outlet Temperature Indication	AI	C55865-M-6203	BAS-2
TI-5241	Chilled Water Supply Temperature Indication	AI	C55865-M-6203	BAS-2
TI-5248	Chilled Water Return Temperature Indication	AI	C55865-M-6203	BAS-2
TIC-5260	Process Cooling Water Supply Temperature	AI	C55865-M-6204	BAS-2
TI-5268	Process Cooling Water Return Temperature	AI	C55865-M-6204	BAS-2
TIC-5260	Process Cooling Water Supply Temperature Setpoint	AO	C55865-M-6204	BAS-2

END OF SECTION

SECTION 43 1129

GAS HANDLING VACUUM PUMPS

PART 1 GENERAL

1.1 SECTION INCLUDES

A. Packaged vacuum pumps.

B. Computer interface cabinets.

C. Custom Acoustic Enclosure.

D. It shall be the responsibility of the Subcontractor to flow down the requirements described within this specification to the equipment Supplier. Subcontractor shall review Supplier information for compliance with this specification prior to submitting information to LANL.

1.2 RELATED SECTIONS

A. Section 01 2500, "Substitution Procedures."

B. Section 01 4000, "Quality Requirements."

C. Section 01 4200, "Abbreviations and Acronyms, Definitions, and References."

D. Section 01 8116, "Facility Environmental Requirements."

E. Section 03 3001, "Reinforced Concrete."

F. Section 13 4800, "Sound, Vibration, and Seismic Control."

G. Section 22 0548, "Vibration and Seismic Controls for Plumbing Piping and Equipment."

H. Section 22 0554, "Identification for Plumbing, HVAC, and Fire Piping and Equipment."

I. Section 22 1316, "Sanitary Waste and Vent Piping."

1.3 ABBREVIATIONS AND ACRONYMS, DEFINITIONS, AND REFERENCES

A. Refer to Section 01 4200, "Abbreviations and Acronyms, Definitions, and References."

1.4 SUBMITTALS

The following submittals shall be provided in accordance with the requirements of Exhibit I:

A. Equipment list with manufacturer's names, model numbers, and catalog cut sheets.

B. Product Data: For each type of product indicated, include rated capacities, operating characteristics, electrical characteristics, and furnished specialties and accessories.

1. Wiring Diagrams: For power, signal, and control wiring.

C. Delegated Design Submittal: For vacuum-producing equipment mounting indicated to comply with performance requirements and design criteria, including analysis data signed and sealed by the qualified engineer responsible for their preparation.

1. Detail fabrication and assembly of supports.

2. Design Calculations: Calculate requirements for selecting vibration isolators and seismic restraints, if required, and for designing vibration isolation bases.

D. Qualification Data: For qualified installer and testing agency.

E. Seismic Qualification Certificates: For vacuum producers, vacuum pump, accessories, custom acoustic enclosure, and components from manufacturer.

1. Basis for Certification: Indicate whether withstand certification is based on actual test of assembled components or calculation.

2. Dimensioned Outline Drawings of Equipment Unit: Identify center of gravity and locate and describe mounting and anchorage provisions.

3. Detailed description of equipment anchorage devices on which the certification is based and their installation requirements.

F. Field Quality Control Reports.

G. Startup Test Reports.

H. Operation and Maintenance Data: For vacuum equipment to include in operation and maintenance manuals.

I. For receivers and separators (if required): ASME P&PV Section VIII manufacturer's data reports.

1.5 QUALITY ASSURANCE

A. Work identified in this section shall be in accordance with Section 01 4000, "Quality Requirements."

B. Electrical Components, Devices, and Accessories: Listed and labeled as defined in NFPA 70, by a qualified testing agency, and marked for intended location and application.

C. ASME Compliance: Fabricate and label receivers and separators (if required) to comply with *ASME Boiler and Pressure Vessel Code* (ASME B&PV), Section VIII, Division 1.

1.6 QUALIFICATIONS

A. Pumps shall be furnished by a firm qualified, accredited, and regularly engaged in this type of work. Supplier shall maintain shop and facilities suitable for fabrication of the pumps.

1.7 ENVIRONMENTAL REQUIREMENTS

A. Design the vacuum pumps to operate in the environmental conditions specified in Section 01 8116, "Facility Environmental Requirements." Seismic requirements are located in Section 13 4800, "Sound, Vibration, and Seismic Control".

1.8 COORDINATION

A. Coordinate sizes and locations of concrete bases with actual equipment provided.

1.9 EXTRA MATERIALS

A. Furnish extra materials that match products installed and that are packaged with protective covering for storage and identified with labels describing contents.

1. Belts (if required): Two for each belt-driven vacuum producer.

PART 2 PRODUCTS

2.1 COMMERCIAL OFF-THE-SHELF VACUUM PUMP SYSTEMS

A. Alternate products may be accepted; follow Section 01 2500, "Substitution Procedures."

B. Description: Factory-assembled, -wired, -piped, and -tested; electric-motor-driven; air-cooled; continuous-duty vacuum pumps with receiver for low-vacuum sampling service.

C. Manufacturer: Becker Pumps Corp. model TS 165 L4

D. See datasheet in Attachment 1 for specific design and operating data.

E. Certified test data shall be furnished.

F. Receivers and separators (if required): ASME Boiler and Pressure Vessel Section VIII, Division 1 Stamped. Provide NBIC Registration and Number

PART 3 EXECUTION

3.1 PREPARATION

A. Clean vacuum equipment, accessories, and components that have not been cleaned for oxygen service and sealed, or that are furnished unsuitable for laboratory or process vacuum applications, according to CGA G4.1.

3.2 VACUUM EQUIPMENT INSTALLATION

A. Install vacuum equipment according to NFPA 99.

B. Equipment Mounting: Install vacuum producers, except diaphragm vacuum pumps, on concrete bases using elastomeric pads or elastomeric mounts. Comply with requirements in Section 03 3001, "Reinforced Concrete." Comply with requirements for vibration isolation devices specified in Section 22 0548, "Vibration and Seismic Controls for Plumbing Piping and Equipment."

1. Minimum deflection (1/4 in.)
2. Install dowel rods to connect concrete base to concrete floor. Unless otherwise indicated, install dowel rods on 18-in. enters around the full perimeter of concrete base.
3. For supported equipment, install epoxy-coated anchor bolts that extend through concrete base and anchor into structural concrete floor.
4. Place and secure anchorage devices. Use setting drawings, templates, diagrams, instructions, and directions furnished with items to be embedded.
5. Install anchor bolts to elevations required for proper attachment to supported equipment.

C. Install vacuum equipment and acoustic enclosure anchored to substrate.

D. Orient equipment so controls and devices are accessible for servicing.

E. Maintain manufacturer's recommended clearances for service and maintenance.

F. Install the following devices on vacuum equipment:

1. Thermometer, vacuum gauge, and pressure relief valve (install on each vacuum pump receiver).

2. Drain valves (install on receivers and separators, if required; discharge receiver condensate over nearest floor drain).

3.3 CONNECTIONS

A. Comply with requirements for drain piping specified in Section 22 1316, "Sanitary Waste and Vent Piping." Drawings indicate general arrangement of piping, fittings, and specialties.

B. Install piping adjacent to equipment to allow service and maintenance.

C. Connect vacuum piping to vacuum equipment, accessories, and specialties with shutoff valve and union or flanged connection.

D. Connect water supply to vacuum equipment that requires water. Include backflow preventer.

3.4 IDENTIFICATION

A. Identify laboratory/process vacuum equipment system components. Comply with requirements for identification specified in Section 22 0554, "Identification for Plumbing, HVAC, and Fire Piping and Equipment."

3.5 FIELD QUALITY CONTROL FOR VACUUM PUMP

A. Testing Agency: Engage a qualified testing agency to perform tests and inspections.

B. Manufacturer's Field Service: Engage a factory-authorized service representative to inspect, test, and adjust components, assemblies, and equipment installations, including connections.

C. Perform tests and inspections:

1. Manufacturer's Field Service. Engage a factory-authorized service representative to inspect components, assemblies, and equipment installations, including connections, and to assist in testing.

2. Replace damaged and malfunctioning controls and equipment.

3. Testing Certification. Certify that specified tests, inspections, and procedures have been performed and certify report results. Include the following:

a. Inspections performed,
b. Procedures and materials used,
c. Test methods used, and
d. Results of tests.

D. Components will be considered defective if they do not pass tests and inspections.

E. Prepare test and inspection reports.

3.6 STARTUP SERVICE

A. Engage a factory-authorized service representative to support commissioning. The following tasks will be performed during vacuum pump startup testing.

1. Complete installation and startup checks according to manufacturer's written instructions.
2. Check for lubricating oil in lubricated-type equipment.
3. Check belt drives for proper tension.
4. Verify that vacuum producer outlet piping is clear.
5. Check for equipment vibration-control supports and flexible pipe connectors, and verify that equipment is properly attached to substrate.
6. Check safety valves for correct settings.
7. Check for proper seismic restraints.
8. Drain receiver and separator tank(s), if required.
9. Operational Test. After electrical circuitry has been energized, start units to confirm proper motor rotation and unit operation.
10. Test and adjust controls and safeties.

B. Verify that vacuum equipment is installed and connected according to the Contract documents.

C. Verify that electrical wiring installation complies with manufacturer's submittal and written installation requirements in Division 26, "Electrical."

3.7 DEMONSTRATION

A. Engage a factory-authorized service representative to train Owner's maintenance personnel to adjust, operate, and maintain vacuum producers.

3.8 SCHEDULES

A. None.

Air Sample Vacuum System, LLW Treatment Building Data Sheet

AECOM	DS-001, Air Sample Vacuum System, LLW Treatment Building				Specification No. 43 1129	
	Rev.	By	Date	Comment	Sheet	Date
	~~	~~~	~~~	~~~	1 of 1	~~~
					Checked By	Approved By
					~~	~~~
					Purchase Order:	
Project RLWTF-UP					Requisition No.:	

Tag No.	PV-5001A, B, C
P&ID #	C55864 P-6006
Quality Assurance Level	General Service

Operating Data			Rev.
Duty Service		Continuous	~~~
Fluid		Air	~~~
Ambient Pressure	(psia)	11.1	~~~
Operating Pressure	(inHgV)	12.0	~~~
Maximum Pressure	(inHgV)	11.0	
Minimum Pressure	(inHgV)	13	~~~
Normal Temperature	(deg F)	80	~~~
Temperature Range	(deg F)	50-85	~~~
Ambient Temperature Range	(deg F)	40-115	~~~
Operating Capacity (SCFM @ 12 inHgV)		40	
Elevation (ft)		7,500	

Component Data		
Pump		~~~
Pump Configuration	Triplex	~~~
Pump Type	Rotary Vane	~~~
Lubrication	Oil Flooded	
Reciever		~~~
Reciever Size (gallons)	240	~~~
Reciever Rating (psig)	210	
Material	Carbon Steel	
Design Code (ASME B&PV)	Section VIII Div 1	
Code Stamp	"U"	
Condensate Drain Type	manual	
Electrical		~~~
Volts	460	~~~
Phase	3	~~~
Frequency (Hz)	60	

Component Data (continued)		
Motor (ea.)		
Motor Speed	1,740	~~~
Insulation	Class F	
Size (hp)	5	
Type	TEFC	
Filters		
Air Inlet Filter (micron)	5	~~~

Controls

Electrical controls shall be of the automatic alternating, and shall consist of the following:
1. Three magnetic motor starters, each complete with a motor branch-circuit disconnect, and thermal, magnetic, and short-circuit protection.
2. Redundant, low voltage control transformers with fused primary and secondary.
3. Primary Transformer Failure (CVT-1 Failed) warning light.
4. Three hand-off-auto switches.
5. Pressure transducer to monitor and control the system operating vacuum level.
6. Emergency shut-off switch.
7. All housed in a NEMA 12 enclosure.
8. The motor starters shall be mounted on a DIN rail for easy future expansion.
9. The control panel shall be UL listed.

Control panel shall rotate pumps based on accumulated run time.
1. Pump with lowest hours shall start first.
2. Pump with highest hours shall shut off first.
3. Any pump that is turned off at the HOA switch shall be skipped.
4. Any pump that is tripped shall be skipped and an alarm shall be activated.
5. A time delay shall be incorporated into the PLC program to ensure that no pump exceeds the NEMA recommended number of starts and stops per hour.
6. All pumps will be set to turn on at the low vacuum set point and will shut off when the vacuum level reaches the high set point, providing the time delay has elapsed.
7. In the case of a power failure, the program shall be automatically downloaded from the EEPROM and the system shall restart automatically.

Comments/Notes:

*Vendor to provide/verify this information

END OF SECTION

SECTION 43 2100

LIQUID PUMPS

PART 1 GENERAL

1.1 SECTION INCLUDES

A. This specification establishes the technical requirements for the design, materials of construction, fabrication, testing, shipment, and quality assurance of liquid pumps (centrifugal and air diaphragm). Chemical dosing pumps are addressed in Section 43 4117, "Chemical Dosing System Pumps and Day Tanks."

1. It shall be the responsibility of the Subcontractor to flow down the requirements described within this specification to the equipment Supplier. Subcontractor shall review Supplier information for compliance with this specification prior to submitting information to LANL.

B. This specification concerns the following low-level waste pumps detailed on the indicated datasheets:

Pump	Datasheet	Pump	Datasheet
P-1302	DS-001	P-1703	DS-005
P-1407	DS-002	P-1704	DS-004
P-1408	DS-002	P-1705	DS-005
P-1503	DS-006	P-1706	DS-005
P-1701	DS-003	P-1707	DS-005
P-1702	DS-004		

C. The following is a summary of Supplier responsibilities described in this specification:

1. Design/fabricate pumps in accordance with:
   a. This specification,
   b. Supplier's LANL-approved drawings, and
   c. Other referenced documents.
2. Furnish design data required by this specification to document pump designs.
3. Procure equipment, materials, or supplies to complete the work, unless otherwise stated.
4. Test and inspect as required by this specification and referenced standards.
5. Furnish the data required by this specification to document that required tests and inspections have been performed.
6. Package, ship, and deliver the pumps.
7. Provide LANL full access to the facility for performing random or scheduled inspections and/or surveillance of work performed.

1.2 RELATED SECTIONS

A. Section 01 2500, "Substitution Procedures."

B. Section 01 4000, "Quality Requirements."

C. Section 01 4200, "Abbreviations and Acronyms, Definitions, and References."

D. Section 01 8116, "Facility Environmental Requirements."

E. Section 09 9600, "Special Coatings."

F. Section 13 4800, "Sound, Vibration, and Seismic Control."

G. Section 26 0700, "Induction Motors – 500HP and Smaller."

H. Section 43 4117, "Chemical Dosing System Pumps and Day Tanks."

1.3 ABBREVIATIONS AND ACRONYMS, DEFINITIONS, AND REFERENCES

A. Refer to Section 01 4200, "Abbreviations and Acronyms, Definitions, and References."

B. Drawing C55864, Sheet D-1011, "Process Plan – North."

C. Drawing C55864, Sheet D-6000, "Process Flow Diagram."

D. Drawing C55864, Sheet D-6012, "Reaction/Precipitation System TK-1101 P&ID."

E. Drawing C55864, Sheet D-6017, "Reverse Osmosis System P-1302 P&ID."

F. Drawing C55864, Sheet D-6021, "Polishing System Pump and FLT-1401 P&ID."

G. Drawing C55864, Sheet D-6023, "Solids Collection & Concentration System TK-1707 and Pump P&ID."

H. Drawing C55864, Sheet D-6025, "Solids Collection & Concentration System TK-1702 and Pump P&ID."

I. Drawing C55864, Sheet D-6026, "Solids Collection & Concentration System TK-1704 and Pump P&ID."

J. Drawing C55864, Sheet D-6027, "Solids Collection & Concentration System TK-1703 and Pump P&ID."

K. Drawing C55864, Sheet D-6028, "De-Watering System TK-1705 and Pump P&ID."

L. Drawing C55864, Sheet D-6030, "De-Watering System TK-1706 and Pump P&ID."

M. Drawing C55867, Sheet D-6411, "Effluent Storage System TK-1502 and Pump P&ID."

N. 60239831-MCAL-028, *Pump Sizing for LLW Systems*.

O. 60239831-PCAL-001, *LLW Bounding Material Balance*.

1.4 SUBMITTALS

A. Provide reference to LANL Project ID Number, LANL Contract Number, Component Number, Component Title, and Drawing Number on all submittals.

B. Submit the following in accordance with the requirements of Exhibit I:

1. Drawings, Calculations, and Supporting Data:

a. Submit design drawings, calculations, and supporting data before beginning fabrication of pumps. Design drawings shall indicate the location of anchor points. LANL will review and comment on

design calculations and drawings. The LANL review does not release the Supplier from responsibility to design and fabricate the pumps in accordance with applicable standards, regulations, and this specification. Include assumptions and input/output data with the calculations. If computer calculations are performed, include the name of the calculation program, and the version number.

b. Allowable nozzle loads necessary for pipe stress analysis shall be supplied by the subcontractor to the contractor for review 30 days prior to scheduled installation date.

2. Quality Assurance/Quality Control:

a. Notifications. Notify LANL at least seven days in advance for Acceptance Testing and Final Inspection.

b. Submit a Lower Tier Service Plan if outside Subcontractors will perform some of the Work. Provide LANL with the name, address, telephone number, and point of contact for outside services that the Supplier intends to use on this project. Identify the specific Work requirements of this specification that will be performed by those outside services.

c. Submit a Fabrication Schedule.

d. Material Control Procedure. Before fabrication, submit for LANL approval a material control procedure to be used in the execution of the Work. Describe the control methods and traceability documentation in the procedure used by the Supplier to handle and monitor the use of controlled materials, such as stainless steel and welding filler rod. Address in the procedure items such as procurement controls, segregation of materials, and traceability of materials from receipt at the shop through processing and final assembly.

e. Fabrication Procedures. If applicable, submit a copy of:

1) Welding Procedure Specifications (WPS),
2) Welding Procedure Qualification Record (WPQR),
3) Welding and Nondestructive Examination (NDE) Personnel Listing,
4) Liquid Penetrant Test Procedure,
5) Radiographic Test Procedure, and
6) Leak Test Procedure.

f. Certifications. If applicable, submit a copy of:

1) Welder Performance Qualification Records;
2) NDE Personnel Certifications; and
3) Material certifications for steel, weld filler materials, and certify the chloride content of materials used in fabrication of stainless steel.

g. Test Reports. If applicable, submit a copy of:

1) Liquid Penetrant Test Report;
2) Radiographic Test Report;
3) Leak Test Report;
4) Protective Coating Test Report, if applicable; and
5) Motor Test Report

h. Shipping Submittals. Submit a copy of:

1) Supplier's Vessel Cleaning Procedure,
2) Supplier's Packaging Procedure, and
3) Bill of Lading with the shipment of pumps.

3. Nonconformances:

a. Submit a written request to LANL for any proposed technical changes, exceptions, and/or deviations to this specification or other Contract documents. Do not implement proposed changes, exceptions, or deviations until the LANL Subcontract Technical Representative (STR) provides written approval.

b. Conflicts. Notify LANL, as soon as possible, in the event of conflicts among the specifications, drawings, and/or the manufacturer's recommended processes or instructions.

4. Warranty. Supplier is to guarantee the pumps and associated equipment at design conditions and warrants that materials and workmanship, plus apparatus supplied, if any, are in accordance with Contract document requirements.

5. Provide Operations & Maintenance Manual, with detailed instructions for performance of any required maintenance activities, including as a minimum: lubrication, refurbishment/overhaul, calibration/testing and spare parts list.

1.5 QUALITY ASSURANCE

A. Work identified in this section shall be done under a Quality Assurance Program (QAP) in accordance with Section 01 4000, "Quality Requirements."

B. The Supplier's QAP shall control a combination of design, materials, preparation, fabrication, inspection, testing, cleaning, packaging, and shipping that have to be done correctly to ensure the production of an acceptable finished product.

C. Supplier shall maintain a Quality Control Program.

1.6 QUALIFICATIONS

A. Pumps shall be furnished by a firm qualified, accredited, and regularly engaged in this type of work. Supplier shall maintain shop and facilities suitable for fabrication of the pumps.

1.7 ENVIRONMENTAL REQUIREMENTS

A. Design the pumps to operate in the environmental conditions specified in Section 01 8116, "Facility Environmental Requirements." Seismic requirements are located in Section 13 4800, "Sound, Vibration, and Seismic Control."

PART 2 PRODUCTS

2.1 PRODUCT OPTIONS AND SUBSTITUTIONS

A. Alternate products may be accepted in accordance with Section 01 2500, "Substitution Procedures."

2.2 GENERAL

A. See datasheets in Attachment 1 for specific design and operating requirements.

B. Surface coatings shall be in accordance with Section 09 9600, "Special Coatings."

C. Material of Construction Compatibility: Selection of fasteners and interfacing components (bolts, nuts, washers, unions, gaskets, etc) shall be based on required performance (e.g., strength, fluid compatibility) and avoidance of potential for galvanic corrosion (e.g., connection/contact of dissimilar metals).

2.3 DRAWINGS

A. Detailed, dimensioned general arrangement drawing(s) to indicate all piping runs, show all valves and instrumentation and maintenance access clearances.

B. Size (length, width, height) of each pump skid.

C. Equipment list with manufacturer's names, model numbers, and catalog cut sheets.

2.4 PERFORMANCE AND DESIGN CONDITIONS

A. The pumps shall be mounted and piped on pump skids which include all components (valves and instrumentation) as identified on the system P&IDs. The centerline elevation for centrifugal pump skid inlets shall be no more than 6-1/4 in. and the centerline elevation for air-operated diaphragm pump skid inlets shall be no more than 12 in.

B. The pump shall be mounted on the skid incorporating a vibration dampening method, and flexible couplers shall be incorporated at the suction and discharge to isolate vibrations. Suction and discharge location and orientation on the skids shall be as indicated on Drawing 55684, Sheet D-1011 and corresponding section drawings.

C. All process piping shall be constructed of stainless steel.

D. All monitored signals will be communicated to the LANL's control system.

E. LANL's control system will be able to select the pump and enable/disable its operation.

2.5 MANUFACTURERS

A. ARO.

B. Goulds.

C. Grundfos.

D. Siemens.

E. Taco.

PART 3 EXECUTION

3.1 EXAMINATIONS

A. General:

1. The Subcontractor shall qualify Inspection Personnel performing acceptance inspections. In addition, the Subcontractor shall document all qualifications.

2. The results of inspections shall be documented and submitted to the Subcontractor Technical Representative for review.

B. Nondestructive Examinations:

1. Structural-steel welds shall be visually examined, as a minimum, in accordance with AWS D1.1/D1.1M and shall meet the acceptance criteria stated in AWS D1.1/D1.1M. Additional NDE testing requirements shall be as shown on the drawings or as required by AWS D1.1/D1.1M.

2. NDE Personnel shall be qualified to American Society of Nondestructive Testing (ASNT) SNT-TC-1A.

3. Pipe welding shall be visually examined in accordance with ASME B31.3.

C. Final Inspections:

1. Final inspection shall be performed in accordance with the Seller's standard practices. At a minimum, the Seller shall verify that the critical dimensions are as identified in the associated datasheet.

3.2 INSTALLATION - GENERAL

A. Unload with equipment having sufficient lifting capacity to avoid damage to the pumps.

B. The pumps shall be installed in accordance with applicable codes, regulations, and standards identified below (see Section 01 4200, "Abbreviations and Acronyms, Definitions, and References"):

1. 10 CFR 830.122;
2. ANSI/ASME B73.1 – B73.3;
3. ASME B31.3;
4. ASNT SNT-TC-1A;
5. ASTM A 106;
6. ASTM D 5162;
7. AWS D1.1/D1.1M;
8. ANSI/HI-3.1 – 3.6;
9. NEMA MG-1;
10. UL 508; and
11. NEC.

C. No modifications shall be made to any equipment without prior written approval from LANL. This includes any welding, additional penetrations in any structure, or repairing damage which might affect the integrity of the equipment.

3.3 TESTING

A. Factory Acceptance Testing (FAT):

1. Before performing the FAT, a FAT procedure shall be submitted to LANL for review and approval.

2. The results of the FAT shall be documented and submitted to the Buyer for review and approval before final acceptance of each pump.

3. The Seller shall provide qualified Inspectors per ASNT SNT-TC-1A for all NDE inspections and for functional tests in this section.

B. Motor Test:

1. Motors shall be designed and tested by the manufacturer in accordance with NEMA MG-1. Certificates of Conformance and/or certified test results shall be supplied for the following tests:

a. Rated load readings of current, power, and speed at rated voltage and frequencies;

b. No load readings of current, power, and speed at rated voltage and frequencies;

c. Mechanical vibration and motor balance test results in accordance with NEMA MG 1-12.06 and NEMA MG 1-12.07;

d. High potential test results in accordance with NEMA MG 1-12.03; and

e. 1000V dc Megger test for one minute, phase to ground.

C. Inspection and Test Plan/Report Forms:

1. An inspection and operational testing plan/report form shall be prepared to govern inspection and final operations test activities.

2. Inspection forms shall contain, at a minimum, sign-offs for appropriate test and inspection personnel, including quality assurance; measuring and test equipment (M&TE) number and due date; and a reference to the inspection criteria (for example, drawing number or specification number). Seller's standard forms can be used provided the above information is included in the document.

3. Inspection and test result forms shall summarize the scope of the inspection, results, and the findings, if any.

4. Test plans and reports shall be submitted as deliverables to LANL.

5. Each electrical motor shall be tested as required by Section 26 0700, "Induction Motors – 500HP and Smaller."

6. Certified copies of the test results shall be furnished to LANL for approval before shipment.

D. Engage a factory authorized service representative to support commissioning.

3.4 SCHEDULES

A. To be provided by Subcontractor upon award.

Liquid Pumps Data Sheets

AECOM	DS-001, Process Pump				SPEC. No. 43 2100		Rev. ~~
	NO.	BY	DATE	REVISION	SHEET 1	OF 1	DATE ~~
	~~	~~	~~	~~	BY ~~	CHK'D ~~	APPR. ~~
					P.O.		
Project: RLWTF-UP					REQ.		

1. Fluid	See Note 3	19. Type	Centrifugal	<-
2. Pump Case	316SS	20. MFR.	Grundfos	<-
3. Insulation	*	21. Model No.	* Series CM or LC	<-
4. TDH	37 ft			<-
5. Impeller/Shaft	316SS			<-
6. Frame	*	22. Motor Size	1.5 hp	<-
7. Capacity	45 gpm	23. Air Pressure	N/A	<-
8. Gaskets/O-rings	*	24. Air Consumption	N/A	<-
9. Stator Fill	*			<-
10. Liners	*			<-
11. Operating Temp	50 F to 85 F			<-
12. NPSHa	22 ft			<-
				<-
13. Voltage	460 VAC			<-
14. Hertz	60			<-
15. Phase	3			<-
16. RPM	*	25. Vendor		<-
				<-
17. Design Temp	125 F			<-
18. Design Pressure	*			<-

Rev.	Tag. No.	Line no. /Equip.	P&ID	Sheet	T (°F) Max.	Pressure (psig) Norm.	Max.	Range	Service	Notes
~~	P-1302	LLW-208-SS150-1 1/2" LLW-228-SS150-1 1/2"	C55864	D-6017	125	16.1	*	~~	LLW	

NOTES:

1. Performance and dimensions shall be in accordance with ANSI/ASME B73.1 through B73.3 or ANSI/HI-3.1 through 3.6, as applicable.
2. Refer to 60239831-MCAL-028, *Pump Sizing for LLW System*, for pump sizing details.
3. Wastewater with the following parameters:

Specific Gravity	1.02	
Viscosity	1.05	cP
Suspended Solids	0	wt%
pH	7.5	

Refer to system material balance (60239831-PCAL-001) for a complete composition of fluid properties.

4. Pump skid shall include electrical safety switches located to provide adequate working space. Coordinate location of disconnect with locations of piping and other equipment. See Drawing C55864, Sheet E-1101.

* Information to be provided by Vendor

AECOM

DS-002, Process Pumps				SPEC. No. 43 2100		Rev. ~~
NO.	BY	DATE	REVISION	SHEET 1	OF 1	DATE ~~
				BY ~~	CHK'D ~~	APPR. ~~
				P.O.		
				REQ.		

Project: RLWTF-UP

1. Fluid	See Note 3	19. Type	Centrifugal
2. Pump Case	316SS	20. MFR.	Grundfos
3. Insulation	*	21. Model No.	* Series CM or LC
4. TDH	26 ft (P-1407) & 15 ft (P-1408)		
5. Impeller/Shaft	316SS		
6. Frame	*	22. Motor Size	1.0 hp
7. Capacity	51 gpm (P-1407) & 30 gpm (P-1408)	23. Air Pressure	N/A
8. Gaskets/O-rings	*	24. Air Consumption	N/A
9. Stator Fill	*		
10. Liners	*		
11. Operating Temp	50 F to 85 F		
12. NPSHa	23 ft		
13. Voltage	460 VAC		
14. Hertz	60		
15. Phase	3		
16. RPM	*	25. Vendor	
17. Design Temp	125 F		
18. Design Pressure	*		

Rev.	Tag. No.	Line no. /Equip.	P&ID	Sheet	T (°F) Max.	Pressure (psig) Norm.	Max.	Range	Service	Notes
~~	P-1407	LLW-264-SS150-2" LLW-267-SS150-1½"	C55864	D-6021	125	11.3	*	~~	LLW	
~~	P-1408	LLW-203-SS150-1½" LLW-205-SS150-1½"	C55864	D-6021	125	6.5	*	~~	LLW	

NOTES:

1. Performance and dimensions shall be in accordance with ANSI/ASME B73.1 through B73.3 or ANSI/HI-3.1 through 3.6, as applicable.
2. Refer to 60239831-MCAL-028, *Pump Sizing for LLW System*, for pump sizing details.
3. Wastewater with the following parameters:

Specific Gravity	1.02	
Viscosity	1.05	cP
Suspended Solids	0	wt%
pH	6.5	

Refer to system material balance (60239831-PCAL-001) for a complete composition of fluid properties.

4. Pump skids shall include electrical safety switches located to provide adequate working space. Coordinate location of disconnect with locations of piping and other equipment. See Drawing C55864, Sheet E-1101.

* Information to be provided by Vendor

AECOM	DS-003, Process Pump				SPEC. No. 43 2100		Rev. ~~
	NO.	BY	DATE	REVISION	SHEET 1	OF 1	DATE ~~
	~~	~~	~~	~~	BY ~~	CHK'D ~~	APPR. ~~
					P.O.		
Project: RLWTF-UP					REQ.		

1. Fluid	See Note 3	19. Type	Air Operated Dual Diaphragm
2. Pump Case	316SS	20. MFR.	ARO
3. Insulation	N/A	21. Model No.	PD15X
4. TDH	14 ft		
5. Diaphragm	*		
6. Frame	N/A	22. Motor Size	N/A
7. Capacity	37 gpm	23. Air Pressure	*
8. Gaskets/O-rings	*	24. Air Consumption	*
9. Stator Fill	N/A		
10. Liners	N/A		
11. Operating Temp	50 F to 85 F		
12. NPSHa	23 ft		
13. Voltage	N/A		
14. Hertz	N/A		
15. Phase	N/A		
16. RPM	N/A	25. Vendor	
17. Design Temp	125 F		
18. Design Pressure	*		

Rev.	Tag. No.	Line no. /Equip.	P&ID	Sheet	T (°F)	Pressure (psig)			Service	Notes
					Max.	Norm.	Max.	Range		
~~	P-1701	LLW-314-SS150-1½" LLW-167-SS150-1½"	C55864	D-6012	125	6.1	*	~~	LLW	

NOTES:
1. Performance and dimensions shall be in accordance with ANSI/ASME B73.1 through B73.3 or ANSI/HI-3.1 through 3.6, as applicable.
2. Refer to 60239831-MCAL-028, *Pump Sizing for LLW System*, for pump sizing details.
3. Wastewater with the following parameters:

Specific Gravity	1.02	
Viscosity	1.05	cP
Suspended Solids	0.7	wt%
pH	10.8	

Refer to system material balance (60239831-PCAL-001) for a complete composition of fluid properties.

* Information to be provided by Vendor

AECOM

DS-004, Process Pumps				SPEC. No. 43 2100		Rev. ~~
NO.	BY	DATE	REVISION	SHEET 1	OF 1	DATE ~~
				BY ~~	CHK'D ~~	APPR. ~~
				P.O.		
				REQ.		

Project: RLWTF-UP

1. Fluid	See Note 3	19. Type	Air Operated Dual Diaphragm
2. Pump Case	316SS	20. MFR.	ARO
3. Insulation	N/A	21. Model No.	PD05A Series
4. TDH	22 ft (P-1702) & 28 ft (P-1704)		
5. Diaphragm	*		
6. Frame	N/A	22. Motor Size	N/A
7. Capacity	7.0 gpm	23. Air Pressure	*
8. Gaskets/O-rings	*	24. Air Consumption	*
9. Stator Fill	N/A		
10. Liners	N/A		
11. Operating Temp	50 F to 85 F		
12. NPSHa	19 ft		
13. Voltage	N/A		
14. Hertz	N/A		
15. Phase	N/A		
16. RPM	N/A	25. Vendor	
17. Design Temp	125 F		
18. Design Pressure	*		

Rev.	Tag. No.	Line no. /Equip.	P&ID	Sheet	T (°F)	Pressure (psig)			Service	Notes
					Max.	Norm.	Max.	Range		
~~	P-1702	LLW-018-SS150-12" LLW-165-SS150-12"	C55864	D-6025	125	9.5	*	~~	LLW	
~~	P-1704	LLW-115-SS150-12" LLW-335-SS150-12"	C55864	D-6026	125	12.2	*	~~	LLW	

NOTES:

1. Performance and dimensions shall be in accordance with ANSI/ASME B73.1 through B73.3 or ANSI/HI-3.1 through 3.6, as applicable.
2. Refer to 60239831-MCAL-028, *Pump Sizing for LLW System*, for pump sizing details.
3. Fluid with the following parameters:

	P-1702	P-1704
Specific Gravity	1.10	1.17
Viscosity (cP)	1.41	1.79
Suspended Solids (wt%)	16	25
pH	10.8	7.0

Refer to system material balance (60239831-PCAL-001) for a complete composition of fluid properties.

* Information to be provided by Vendor

AECOM

DS-005, Process Pumps				SPEC. No. 43 2100		Rev. ~~
NO.	BY	DATE	REVISION	SHEET 1	OF 1	DATE
~~	~~	~~	~~			~~
				BY ~~	CHK'D ~~	APPR. ~~
				P.O.		
Project: RLWTF-UP				REQ.		

1. Fluid	See Note 4	19. Type	Centrifugal	<-
2. Pump Case	316SS	20. MFR.	Grundfos	<-
3. Insulation	*	21. Model No.	* Series CM or LC	<-
4. TDH	See Note 1			<-
5. Impeller/Shaft	316SS			<-
6. Frame	*	22. Motor Size	1.0 hp	<-
7. Capacity	See Note 1	23. Air Pressure	N/A	<-
8. Gaskets/O-rings	*	24. Air Consumption	N/A	<-
9. Stator Fill	*			<-
10. Liners	*			<-
11. Operating Temp	50 F to 85 F			<-
12. NPSHa	20 ft			<-
				<-
13. Voltage	460 VAC			<-
14. Hertz	60			<-
15. Phase	3			<-
16. RPM	*	25. Vendor		<-
				<-
17. Design Temp	125 F			<-
18. Design Pressure	*			<-

Rev.	Tag. No.	Line no. /Equip.	P&ID	Sheet	T (°F)	Pressure (psig)			Service	Notes
					Max.	Norm.	Max.	Range		
~~	P-1703	LLW-023-SS150-1" LLW-179-SS150-1"	C55864	D-6027	125	15.6	*	~~	LLW	
~~	P-1705	LLW-013-SS150-1/2" LLW-091-SS150-1/2"	C55864	D-6028	125	3.9	*	~~	LLW	
~~	P-1706	LLW-227-SS150-1" LLW-397-SS150-1"	C55864	D-6030	125	16.5	*	~~	LLW	
~~	P-1707	LLW-092-SS150-1" LLW-088-SS150-1"	C55864	D-6023	125	15.2	*	~~	LLW	

NOTES:

1. Capacity: 17.0 gpm at 36 ft TDH (P-1703)
   5.0 gpm at 9 ft TDH (P-1705)
   15.0 gpm at 38 ft TDH (P-1706)
   17.0 gpm at 35 ft TDH (P-1707)
2. Performance and dimensions shall be in accordance with ANSI/ASME B73.1 through B73.3 or ANSI/HI-3.1 through 3.6, as applicable.
3. Refer to 60239831-MCAL-028, *Pump Sizing for LLW System*, for pump sizing details.
4. Fluid with the following parameters:

	P-1703	P-1705	P-1706	P-1707
Specific Gravity	1.02	1.02	1.02	1.02
Viscosity (cP)	1.05	1.05	1.05	1.05
Suspended Solids (wt%)	0	0	0	0
pH	10.8	7.7	8.2	10.8

   Refer to system material balance (60239831-PCAL-001) for a complete composition of fluid properties.
5. Pump skids for P-1705 and P-1706 shall include electrical safety switches located to provide adequate working space. Coordinate location of disconnect with locations of piping and other equipment. See Drawing C55864, Sheet E-1101.

* Information to be provided by Vendor

AECOM

DS-006, Process Pump				SPEC. No. 43 2100		Rev. ~~
NO.	BY	DATE	REVISION	SHEET 1	OF 1	DATE ~~
~~	~~	~~	~~	BY ~~	CHK'D ~~	APPR. ~~
				P.O.		
Project: RLWTF-UP				REQ.		

1. Fluid	See Note 3	19. Type	Centrifugal
2. Pump Case	316SS	20. MFR.	Goulds
3. Insulation	*	21. Model No.	* Series 3910 or equal
4. TDH	12 ft		
5. Impeller/Shaft	316SS		
6. Frame	*	22. Motor Size	1.0 hp
7. Capacity	100 gpm	23. Air Pressure	N/A
8. Gaskets/O-rings	*	24. Air Consumption	N/A
9. Stator Fill	*		
10. Liners	*		
11. Operating Temp	50 F to 85 F		
12. NPSHa	17 ft		
13. Voltage	460 VAC		
14. Hertz	60		
15. Phase	3		
16. RPM	*	25. Vendor	
17. Design Temp	125 F		
18. Design Pressure	*		

Rev.	Tag. No.	Line no. /Equip.	P&ID	Sheet	T (°F) Max.	Pressure (psig) Norm.	Max.	Range	Service	Notes
~~	P-1503	LLW-291-SS160-3" LLW-303-SS160-3"	C55867	D-6411	125	5.2	*	~~	LLW	

NOTES:
1. Performance and dimensions shall be in accordance with ANSI/ASME B73.1 through B73.3 or ANSI/HI-3.1 through 3.6, as applicable.
2. Refer to 60239831-MCAL-028, *Pump Sizing for LLW System*, for pump sizing details.
3. Wastewater with the following parameters:

Specific Gravity	1.02	
Viscosity	1.05	cP
Suspended Solids	0	wt%
pH	6.5	

Refer to system material balance (60239831-PCAL-001) for a complete composition of fluid properties.

* Information to be provided by Vendor

END OF SECTION

SECTION 43 2236

LIQUID EVAPORATORS

PART 1 GENERAL

1.1 SECTION INCLUDES

A. The LLW system includes an Evaporator Skid (EVAP-1702) and a Refrigeration Skid (EVAP-1701) to separate both out-of-phase and dissolved solids from the wastewater.

1. It shall be the responsibility of the Subcontractor to flow down the requirements described within this specification to the equipment Supplier. Subcontractor shall review Supplier information for compliance with this specification prior to submitting information to LANL.

B. The distillate from the LLW evaporator is condensed and transferred to the Reverse Osmosis pH Adjustment Tank (TK-1301) or transferred to a Reaction Tank (TK-1101) for additional processing. All of the evaporator bottoms are packaged in drums and staged before transfer to the final storage/disposal site.

C. Ancillary chilled-water, refrigeration, and vacuum systems support the LLW Evaporator. Of these, only the refrigeration and vacuum systems are included in this specification.

D. The following is a summary of supplier responsibilities described in this specification:

1. Design/fabricate a Low Temperature Evaporator System and related equipment in accordance with:

   a. This specification,
   b. Supplier's LANL-approved drawings, and
   c. Other referenced documents.

2. Furnish design data required by this specification to document Low Temperature Evaporator System design.

3. Procure equipment, materials, or supplies to complete the Work, unless otherwise stated.

4. Test and inspect as required by this specification and referenced standards.

5. Furnish the data required by this specification to document that required tests and inspections have been performed.

6. Package, ship, and deliver the Low Temperature Evaporator System and related equipment.

7. Provide LANL full access to the facility for performing random or scheduled inspections and/or surveillance of Work performed.

1.2 RELATED SECTIONS

A. Section 01 2500, "Substitution Procedures."

B. Section 01 4000, "Quality Requirements."

C. Section 01 4200, "Abbreviations and Acronyms, Definitions, and References."

D. Section 01 8116, "Facility Environmental Requirements."

E. Section 09 9600, "Special Coatings."

F. Section 13 4800, "Sound, Vibration, and Seismic Control."

G. Section 26 0700, "Induction Motors–500HP and Smaller."

1.3 ABBREVIATIONS AND ACRONYMS, DEFINITIONS, AND REFERENCES

A. Refer to Section 01 4200, "Abbreviations and Acronyms, Definitions, and References."

B. Codes, specifications, and standards referred to by number or title form a part of this specification to the extent required. Use codes, specifications, and standards referenced of the latest revision at the time of award of contract, unless otherwise stated.

1.4 PROCESS DOCUMENTS

A. Drawing C55864, Sheet D-6000, "Process Flow Diagram."

B. Drawing C55864, Sheet D-6029, "De-Watering System EVAP-1701, EVAP-1702 P&ID."

C. 60239831-PCAL-001, *LLW Bounding Material Balance.*

1.5 SUBMITTALS

A. Submit the following in accordance with the requirements of Exhibit I:

1. Drawings, Calculations, and Supporting Data:

a. Submit design drawings, calculations, and supporting data before beginning fabrication of Low Temperature Evaporator System. Design drawings shall indicate the location of anchor points. LANL will review and comment on design calculations and drawings. The LANL review does not release the Supplier from responsibility to design and fabricate the Low Temperature Evaporator System in accordance with applicable standards, regulations, and this specification. Include assumptions and input/output data with the calculations. If computer calculations are performed, include the name of the calculation program and the version number.

b. Provide logic diagrams and a Sequence of Operation that describe the operation of Low Temperature Evaporator System.

c. Allowable nozzle loads necessary for pipe stress analysis shall be supplied by the subcontractor to the contractor for review 30 days prior to scheduled installation date.

2. Quality Assurance/Quality Control:

a. Notifications. Notify LANL at least seven days in advance for Acceptance Testing and Final Inspection.

b. Submit a Lower Tier Service Plan if outside Subcontractors will perform some of the Work. Provide LANL with the name, address, telephone number, and point of contact for outside services that the Supplier intends to use on this project. Identify

the specific Work requirements of this specification that will be performed by those outside services.

c. Submit a Fabrication Schedule.

d. Material Control Procedure. Before fabrication, submit for LANL approval a material control procedure to be used in the execution of the Work. Describe the control methods and traceability documentation in the procedure used by the Supplier to handle and monitor the use of controlled materials, such as stainless steel and welding filler rod. Address in the procedure items such as procurement controls, segregation of materials, and traceability of materials from receipt at the shop through processing and final assembly.

e. Fabrication Procedures. Submit a copy of:

1) Welding Procedure Specifications (WPS),
2) Welding Procedure Qualification Record (WPQR),
3) Welding and Nondestructive Examination (NDE) Personnel Listing,
4) Liquid Penetrant Test Procedure,
5) Radiographic Test Procedure, and
6) Leak Test Procedure.

f. Certifications. Submit a copy of:

1) Welder Performance Qualification Records and
2) NDE Personnel Certifications.
3) Certificate of Compliance per ASME B31.3

g. Material certifications (CMTR) for steel, weld filler materials, and certify the chloride content (C of C) of materials used in fabrication of stainless steel.

h. Test Reports. Submit a copy of:

1) Liquid Penetrant Test Report ,
2) Radiographic Test Report,
3) Leak Test Report, and
4) Protective Coating Test Report (if applicable).

i. Shipping Submittals. Submit a copy of:

1) Supplier's Vessel Cleaning Procedure,
2) Supplier's Packaging Procedure, and
3) Bill of Lading with the shipment of evaporator.

3. Design Changes:

a. Submit a written request to LANL for any proposed technical changes, exceptions, and/or deviations to this specification or other Contract documents. Do not implement proposed changes, exceptions, or deviations until the LANL Subcontract Technical Representative (STR) provides written approval.

b. Conflicts. Notify LANL, as soon as possible, in the event of conflicts among the specifications, drawings, and/or the manufacturer's recommended processes or instructions.

4. Warranty: Supplier is to guarantee the Low Temperature Evaporator System and associated equipment at design conditions and warrant that materials and workmanship, plus apparatus supplied (if any), are in accordance with Contract document requirements.

5. Provide Operations & Maintenance Manual, with detailed instructions for performance of any required maintenance activities, including as a minimum: lubrication, refurbishment/overhaul, calibration/testing and spare parts list.

1.6 QUALITY ASSURANCE

A. Work identified in this section shall be done under a Quality Assurance Program in accordance with Section 01 4000, "Quality Requirements."

B. The Supplier's Quality Assurance Program shall control a combination of design, materials, preparation, fabrication, inspection, testing, cleaning, packaging, and shipping that have to be done correctly to ensure the production of an acceptable finished product.

C. Supplier shall maintain a Quality Control Program.

1.7 QUALIFICATIONS

A. Low Temperature Evaporator System shall be furnished by a firm qualified, accredited, and regularly engaged in this type of Work. Supplier shall maintain shop and facilities suitable for fabrication of the Low Temperature Evaporator System.

1.8 ENVIRONMENTAL REQUIREMENTS

A. Design the Low Temperature Evaporator System to operate in the environmental conditions specified in Section 01 8116, "Facility Environmental Requirements." Seismic requirements are located in Section 13 4800, "Sound, Vibration, and Seismic Control."

PART 2 PRODUCTS

2.1 PRODUCT OPTIONS AND SUBSTITUTIONS

A. Alternate products may be accepted in accordance with Section 01 2500, "Substitution Procedures."

2.2 GENERAL

A. See datasheet DS-001 in Attachment 1 for specific design and operating requirements.

B. Surface coatings shall be in accordance with Section 09 9600, "Special Coatings."

C. Material of Construction Compatibility: Selection of fasteners and interfacing components (bolts, nuts, washers, unions, gaskets, etc) shall be based on required performance (e.g., strength, fluid compatibility) and avoidance of potential for galvanic corrosion (e.g., connection/contact of dissimilar metals).

D. Stand-alone Programmable Logic Controller control for the Low Temperature Evaporator System (Allen-Bradley preferred) shall be furnished.

E. Provide an approved means for the Low Temperature Evaporator System controller to communicate with LANL's control system.

F. All monitored signals will be communicated to LANL's control system.

G. LANL's control system will be able to select the Low Temperature Evaporator System and enable/disable its operation.

2.3 DRAWINGS

A. Complete process Piping and Instrumentation Diagram (P&ID) for Low Temperature Evaporator System.

B. Detailed, dimensioned general arrangement drawing(s) to indicate all piping runs, show all valves and instrumentation and maintenance access clearances.

C. Size (length, width, height) of the Low Temperature Evaporator System.

D. Equipment list with manufacturer's names, model numbers, and catalog cut sheets.

2.4 PERFORMANCE AND DESIGN CONDITIONS

A. The LLW system shall consist of a single Low Temperature Evaporator System sized to accommodate 100 percent of the design flow of the designated process stream.

B. The LLW stream is drawn into the Low Temperature Evaporator System at a nominal operational rate of 1.7 gpm, has a pH of approximately 7.7, and a composition as shown in the referenced process documents. The Low Temperature Evaporator System shall have a design capacity of 2.3 gpm. The Low Temperature Evaporator System operates at a nominal pressure of 1 to 2 psig.

C. All process piping shall be constructed of stainless steel.

D. Pressure relief shall be included if system is capable of achieving pressures that exceed design pressure of any components. Pressure relief for any ASME B&PV Section VIII vessel must be in accordance with ASME B&PV Section VIII requirements. Pressure relief for any piping must be in accordance with ASME B31.3 Fluid Service Category Normal

E. A single point (480 VAC) termination for incoming power shall be provided. A single, lockable, disconnecting device to isolate incoming power shall also be provided.

F. Pump vibrations shall be isolated and flexible couplers shall be incorporated.

G. Temperature monitoring shall be included for each Evaporation and Condensation Tank.

H. The Low Temperature Evaporator System shall include the following major components:

1. Evaporation Tank–This tank will receive the wastewater that is fed into the system. It contains the heat exchanger coil that brings hot gas into the chamber to cause high levels of evaporation.

2. Condensation Tank–This tank will receive the water vapor that is evaporated from the Evaporation Tank. It contains the refrigeration coils that bring cold gas in to condense the water vapor.

3. Vacuum Pump–The vacuum pump will provide vacuum on the overall system that allows the water to evaporate at low pressures.

4. Refrigeration System–The Refrigeration System will provide the heat pump that causes the water to alternately boil in the Evaporation Tank and condense in the Condensation Tank.

5. Concentrate and Condensate Pumps–Pumps to remove the wastewater concentrate and condensate from the tanks. Wastewater concentrate pump shall be configured for manual operation.

I. Any item that meets the definition of vessel per ASME B&PVC, Section VIII, Division 1, Paragraph U-1 shall be ASME stamped and NBIC Numbered and Registered.

2.5 MANUFACTURERS

A. ISA Corporation.

PART 3 EXECUTION

3.1 EXAMINATIONS

A. General:

1. The Subcontractor shall qualify Inspection and Test Personnel performing acceptance inspections and testing. In addition, the Subcontractor shall document all personnel qualifications.

2. The results of inspections and tests shall be documented and submitted to the Subcontractor Technical Representative for review.

B. Nondestructive Examinations:

1. Structural-steel welds shall be visually examined, as a minimum, in accordance with AWS D1.1/D1.1M and shall meet the acceptance criteria stated in AWS D1.1/D1.1M. Additional NDE testing requirements shall be as shown on drawings or as required by AWS D1.1/D1.1M.

2. NDE Personnel shall be qualified to American Society of Nondestructive Testing (ASNT) SNT-TC-1A.

3. Pipe welding shall be visually examined in accordance with ASME B31.3 Fluid Service Category Normal.

C. Final Inspections:

1. Final inspections shall be performed in accordance with the Seller's standard practices. At a minimum, the Seller shall verify that the critical dimensions of all equipment conform to those in the associated datasheet.

3.2 INSTALLATION - GENERAL

A. Unload with equipment having sufficient lifting capacity to avoid damage to the Low Temperature Evaporator System and related equipment.

B. The Low Temperature Evaporator System and related equipment shall be installed in accordance with applicable codes, regulations, and standards

identified below (see Section 01 4200, "Abbreviations and Acronyms, Definitions, and References"):

1. 10 CFR 830.122;
2. ANSI C19.4;
3. ANSI C50.20;
4. ANSI C50.41;
5. ANSI C114.1 ;
6. API Standard 620;
7. *ASME Boiler and Pressure Vessel Code* (Sections II, V, VIII, and IX);
8. ASME B16.11;
9. ASME B16.25;
10. ASME B31.3 Fluid Service Category Normal;
11. ASME B31.5;
12. ASNT SNT-TC-1A;
13. ASTM D 5162;
14. AWS D1.1/D1.1M;
15. AWS D1.6;
16. AWS QC-1;
17. AWS QC-7;
18. AWWA D100;
19. NEMA MG-1;
20. IEEE Publication No. 85-1965;
21. IEEE Std 112;
22. IEEE Std 142; and
23. NFPA 70 (2005 Edition).

C. No modifications shall be made to any equipment without prior written approval from the Buyer. This includes any welding, additional penetrations in any structure, or repairing damage which might affect the integrity of the equipment

3.3 TESTING

A. Factory Acceptance Testing (FAT):

1. All tanks associated with the Low Temperature Evaporator System shall be hydrostatically tested.
2. Before performing the FAT, a FAT procedure shall be submitted to the Buyer for review and approval.
3. The results of the FAT shall be documented and submitted to the Buyer for review and approval before final acceptance of each tank.
4. The FAT performed by the Seller shall include, as a minimum and not limited to, a hydro-test in which the tank is filled with water and then pressurized.
5. The Seller shall provide qualified Inspectors per ASNT SNT-TC-1A for all NDE inspections and for operational tests in this section.

B. Inspection and Test Plan/Report Forms:

1. An inspection and operational testing plan/report form shall be prepared to govern inspection and final operations test activities.
2. Inspection forms shall contain, at a minimum, sign-offs for appropriate test and inspection personnel, including quality assurance; measuring

and test equipment (M&TE) number and due date; and a reference to the inspection criteria (for example, drawing number or specification number). Seller's standard forms can be used provided the above information is included in the document.

3. Inspection and test result forms shall summarize the scope of the inspection, results, and the findings, if any.

4. Test plans and reports shall be submitted as deliverables to the Buyer.

5. Final acceptance testing before shipment will consist of operating the unit under a 26-in. Hg minimum vacuum.

6. Pressure jackets shall be tested, hydrostatically, to the pressures indicated in this specification without indication of leakage. Equipment containing stainless steel shall be hydro-tested with water having a chloride content not exceeding 20 ppm. The hydrostatic test shall be conducted in accordance with ASME BP&V Section VIII-Division 1. After all tests, jackets shall be completely drained of water.

7. The vacuum and pressure tests shall be conducted at the same time, if possible. During the test, there shall not be any excessive vibration or noise from moving parts.

8. Before shipment, the electric panel shall be assembled, wired, and functionally tested at the Seller's facility. All equipment will be operated during testing.

9. Each electrical motor shall be tested as required by Section 26 0700, "Induction Motors–500HP and Smaller."

10. Certified copies of the test results shall be furnished to the Buyer for approval before shipment.

C. Engage a factory authorized service representative to support commissioning.

3.4 SCHEDULES

A. To be provided by Subcontractor upon award.

Liquid Evaporators Data Sheet

AECOM	DS-001, Cold Evaporator System				Specification No. 43 2236	
	Rev.	By	Date	Comment	Sheet	Date
	~~	~~~	~~~	~~~	1 of 3	~~~
					Checked By	Approved By
					~~	~~~
					Purchase Order	
Project RLWTF-UP					Requisition No.	

PFD #	C55864, Sheet D-6000	Stream No.	32 (Influent); 33 (Condensate); 36 (Concentrate)
P&ID #	C55864, Sheet D-6029	Quality Assurance Level:	General Service

Operating Conditions:			Rev
Location (Indoors/Outdoors)		Indoors	~~~
Ambient temperature	(°F)	50-85	~~~
Operation	(continuous/intermittent)	Continuous	~~~
Elevation	ft ASL	7500	~~~

Operating Conditions:			Rev
Operation	- Days per year	145	~~~
	- Hours per day	6	~~~
Environment	- Radioactive	Yes	~~~
	- Toxic	Yes	~~~
	- Corrosive	Yes	~~~
	- Flammable	No	~~~

Evaporator Feedstream Design Conditions			
Phase		Liquid	~~~
Operating Capacity (Nom)	(gpm)	1.7	~~~
Operating Temp (Nom)	(° F)	77	~~~
Operating Temp (Max)	(° F)	120	~~~
Specific Gravity	SG	1.01	~~~
pH	pH	7.7	~~~
Composition		Note 3	~~~

Evaporator Concentrate Design Conditions			
Phase		Liquid	~~~
Operating Capacity (Nom)	(gpm)	0.1	~~~
Operating Temp (Nom)	(° F) *		~~~
Operating Temp (Max)	(° F) *		~~~
Solids Content	(wt%)	30	~~~
Specific Gravity	SG	1.21	~~~
Viscosity (max @ 150 °F)	cP	1.4	~~~
pH	pH	9.8	~~~
Composition		Note 3	~~~

Evaporator Condensate Design Conditions			
Phase		Liquid	~~~
Operating Capacity (Nom)	(gpm)	1.6	~~~
Operating Temp (Nom)	(° F) *		~~~
Operating Temp (Max)	(° F) *		~~~
Specific Gravity	SG	1	~~~
pH	pH	8.2	~~~
Composition		Note 3	~~~

Evaporator System Design Data	Tag No.	See Note 1	
Water Removal Rate (Nom)	lb/hr *		~~~
Design Capacity	(gpm) *	2.3	~~~
Material of Construction (Wetted Parts)	*		~~~

Evaporation Tank	Tag No. *		
Type	*		~~~
Manufacturer	*		~~~
Tank Diameter	(in) *		~~~
Tank Height	(in) *		~~~
Tank Volume (Operating)	(gal) *		~~~
Tank Volume (Total)	(gal) *		~~~
Quantity (Per System)	*		~~~
Material Of Construction	*		~~~
Operating Pressure (Nom)	(psig) *		~~~
Design Pressure (Min/Max)	(psig) *		~~~
Operating Temperature (Nom)	(°F) *		~~~
Design Temperature (Min/Max)	(°F) *		~~~

Condensate Tank	Tag No. *		
Type	*		~~~
Manufacturer	*		~~~
Tank Diameter	(in) *		~~~
Tank Height	(in) *		~~~
Tank Volume (Operating)	(gal) *		~~~
Tank Volume (Total)	(gal) *		~~~
Quantity (Per System)	*		~~~
Material Of Construction	*		~~~
Operating Pressure (Nom)	(psig) *		~~~
Design Pressure (Min/Max)	(psig) *		~~~
Operating Temperature (Nom)	(°F) *		~~~
Design Temperature (Min/Max)	(°F) *		~~~

AECOM	DS-001, Cold Evaporator System				Specification No. 43 2236	
	Rev.	By	Date	Comment	Sheet	Date
	~~	~~~	~~~	~~~	2 of 3	~~~
					Checked By	Approved By
					~~	~~~
					Purchase Order	
Project RLWTF-UP					Requisition No.	

Waste Concentrate Pump	Tag No. *			Waste Condensate Pump	Tag No. *		
Type	*		~~~	Type	*		~~~
Manufacturer	*		~~~	Manufacturer	*		~~~
Model No.	*		~~~	Model No.	*		~~~
Capacity	(gpm) *		~~~	Capacity	(gpm) *		~~~
TDH	(ft) *		~~~	TDH	(ft) *		~~~
NPSHR	(ft) *		~~~	NPSHR	(ft) *		~~~
Design Temperature	(°F) *		~~~	Design Temperature	(°F) *		~~~
Design Pressure	(psig) *		~~~	Design Pressure	(psig) *		~~~
Material Of Construction	*		~~~	Material Of Construction	*		~~~
Electrical	(Volt/Hz/Phase) *		~~~	Electrical	(Volt/Hz/Phase) *		~~~
Motor Size	(hp) *		~~~	Motor Size	(hp) *		~~~
Design Power (air)	(x psig @ x scfm) *		~~~	Design Power (air)	(x psig @ x scfm) *		~~~

Refrigeration System	Tag No. *			Vacuum Pump	Tag No. *		
Type	*		~~~	Type	*		~~~
Manufacturer	*		~~~	Manufacturer	*		~~~
Model No.	*		~~~	Model No.	*		~~~
Material Of Construction	*		~~~	Capacity	(cfh) *		~~~
Electrical	(Volt/Hz/Phase) *		~~~	Vacuum (Max)	(inHg) *		~~~
Motor Size	(hp) *		~~~	Design Temperature	(°F) *		~~~
				Material Of Construction	*		~~~
				Electrical	(Volt/Hz/Phase) *		~~~
				Motor Size	(hp) *		~~~

AECOM	DS-001, Cold Evaporator System				Specification No. 43 2236	
	Rev.	By	Date	Comment	Sheet	Date
	~~	~~~	~~~	~~~	3 of 3	~~~
					Checked By	Approved By
					~~	~~~
					Purchase Order	
Project RLWTF-UP					Requisition No.	

Process Interface Data				Utility Interface Data			
Feedwater Line				**Electrical Service**	(Volt/Hz/Phase) *	480/60/3	~~~
Connection Size	(in)	1/2	~~~		(kW) *	100	~~~
Connection Type		Note 4	~~~				
Connection Material		SST	~~~	**Water (Non-Potable)**			
				Flow Rate	(gpm @ 30 psi) *	10	~~~
Concentrate Line				Connection Size	(in) *	1/2	~~~
Connection Size	(in)	1/2	~~~	Connection Type	*	Note 4	~~~
Connection Type		Note 4	~~~	Connection Material	*		~~~
Connection Material		SST	~~~				
				Water (Chilled)			
Condensate Line				Flow Rate	(gpm @ 60 °F) *	75	~~~
Connection Size	(in)	1/2	~~~	Temperature Rise	(°F) *	10	~~~
Connection Type		Note 4	~~~	Connection Size (Supply & Return)	(in) *	2 1/2	~~~
Connection Material		SST	~~~	Connection Type	*	Note 4	~~~
				Connection Material	*		~~~
Ventilation Exhaust Line							
Connection Size	(in)	1	~~~	**Compressed Air**			
Connection Type		Note 4	~~~	Flow Rate	(cfm @ 100 psig) *	10	~~~
Connection Material		SST	~~~	Connection Size	(in) *	1/2	~~~
				Connection Type	*		~~~
				Connection Material	*		~~~

Interface Physical Data & Weights			
Evaporator Skid			
Weight	(lb) *	9,000	~~~
Nominal Dimensions (L x W x H)	(ft) *	10 x 7 x 11	~~~
Refrigeration Skid			
Weight	(lb) *	6,500	~~~
Nominal Dimensions (L x W x H)	(ft) *	12 x 4 x 6	~~~

Comments/Notes:

* Denotes data to be supplied/confirmed by vendor

1. Tag No.: EVAP-1702 for LLW Evaporator Skid , EVAP-1701 for LLW Refrigeration Skid.
2. Evaporator System shall be ISA Corporation model CE 500, or equivalent based on performance characteristics.
3. For composition of feedstream see system material balance 60239831-PCAL-001.
4. All process and utility (potable and chilled water) connections are to be raised face, 150# ANSI flanges (or 300# ANSI flanges if required by the subcontractors design).

END OF SECTION

SECTION 43 2243

LIQUID FILTERS

PART 1 GENERAL

1.1 INTRODUCTION

A. It is the intent of this document to contract with a Vendor to furnish a Liquid Roughing Filtration Unit that meet the required criteria outlined in this specification. The Liquid Roughing Filtration Unit will be installed in the RLWTF low-level waste (LLW) process.

1. It shall be the responsibility of the Subcontractor to flow down the requirements described within this specification to the equipment Supplier. Subcontractor shall review Supplier information for compliance with this specification prior to submitting information to LANL.

B. The purpose of the roughing filter is to remove any miscellaneous suspended solids potentially carried over in the LLW process stream from waste storage.

C. The following is a summary of Supplier responsibilities described in this specification:

1. Design and fabricate a Liquid Roughing Filtration Unit and related equipment in accordance with:

a. This specification,
b. Supplier's LANL-approved drawings, and
c. Other referenced documents.

2. Furnish design data required by this specification to document Liquid Roughing Filtration Unit design.

3. Procure equipment, materials, or supplies to complete the Work, unless otherwise stated.

4. Test and inspect, as required, by this specification and referenced standards.

5. Furnish the data required by this specification to document that required tests and inspections have been performed.

6. Package, ship, and deliver the Liquid Roughing Filtration Unit and related equipment.

7. Provide LANL full access to the facility for performing random or scheduled inspections and/or surveillance of Work performed.

1.2 RELATED SECTIONS

A. Section 01 2500, "Substitution Procedures."

B. Section 01 4000, "Quality Requirements."

C. Section 01 4200, "Abbreviations and Acronyms, Definitions, and References."

D. Section 01 8116, "Facility Environmental Requirements."

E. Section 09 9600, "Special Coatings."

F. Section 13 4800, "Sound, Vibration, and Seismic Control."

1.3 ABBREVIATIONS AND ACRONYMS, DEFINITIONS, AND REFERENCES

A. Refer to Section 01 4200, "Abbreviations and Acronyms, Definitions, and References."

B. Codes, specifications, and standards referred to by number or title form a part of this specification to the extent required by the following references. Use codes, specifications, and standards referenced below of the latest revision at the time of award of contract, unless otherwise stated below.

1.4 PROCESS DOCUMENTS

A. Drawing C55864, Sheet D-6000, "Process Flow Diagram."

B. Drawing C55864, Sheet D-6010, "Influent Filter System Roughing Filters P&ID."

C. 60239831-PCAL-001, *LLW Bounding Material Balance*.

1.5 SUBMITTALS

A. Submit the following in accordance with requirements of Exhibit I:

1. Drawings, Calculations, and Supporting Data:

a. Submit design drawings, calculations, and supporting data before beginning fabrication of filter. Design drawings shall indicate the location of anchor points. LANL will review and comment on design calculations and drawings. The LANL review does not release the Supplier from responsibility to design and fabricate the filters in accordance with applicable standards, regulations, and this specification. Include assumptions and input/output data with the calculations. If computer calculations are performed, include the name of the calculation program and the version number.

b. Provide logic diagrams and a Sequence of Operation that describe the operation of the Liquid Roughing Filtration Unit.

c. Allowable nozzle loads necessary for pipe stress analysis shall be supplied by the subcontractor to the contractor for review 30 days prior to scheduled installation date.

2. Quality Assurance/Quality Control:

a. Notifications. Notify LANL at least seven days in advance for Acceptance Testing and Final Inspection.

b. Submit a Lower Tier Service Plan if outside Subcontractors will perform some of the Work. Provide LANL with the name, address, telephone number, and point of contact for outside services that the Supplier intends to use on this project. Identify the specific Work requirements of this specification that will be performed by those outside services.

c. Submit a Fabrication Schedule.

d. Material Control Procedure. Before fabrication, submit for LANL approval a material control procedure to be used in the execution of the Work. Describe the control methods and traceability documentation in the procedure used by the Supplier to handle and monitor the use of controlled materials, such as stainless

steel and welding filler rod. Address in the procedure items such as procurement controls, segregation of materials, and traceability of materials from receipt at the shop through processing and final assembly.

e. Fabrication Procedures. Submit a copy of:

1) Welding Procedure Specifications (WPS),
2) Welding Procedure Qualification Record (WPQR),
3) Welding and Nondestructive Examination (NDE) Personnel Listing,
4) Liquid Penetrant Test Procedure,
5) Radiographic Test Procedure, and
6) Leak Test Procedure.

f. Certifications. Submit a copy of:

1) Welder Performance Qualification Records and
2) NDE Personnel Certifications

g. Material certifications for steel (CMTRs), weld filler materials, and certify the chloride content (C of C) of materials used in fabrication of stainless.

h. Test Reports. Submit a copy of:

1) Liquid Penetrant Test Report,
2) Radiographic Test Report,
3) Leak Test Report, and
4) Protective Coating Test Report (if applicable).

i. Shipping Submittals. Submit a copy of:

1) Supplier's Vessel Cleaning Procedure,
2) Supplier's Packaging Procedure, and
3) Bill of Lading with the shipment of filter.

3. Design Changes:

a. Submit a written request to LANL for any proposed technical changes, exceptions, and/or deviations to this specification or other Contract documents. Do not implement proposed changes, exceptions, or deviations until the LANL Subcontractor Technical Representative (STR) provides written approval.

b. Conflicts: Notify LANL, as soon as possible, in the event of conflicts among the specifications, drawings, and/or the manufacturer's recommended processes or instructions.

4. Warranty: Supplier is to guarantee the liquid filter and associated equipment at design conditions and warrant that materials and workmanship, plus apparatus supplied, if any, are in accordance with Contract document requirements.

5. Provide Operations & Maintenance Manual, with detailed instructions for performance of any required maintenance activities, including as a minimum: lubrication, refurbishment/overhaul, calibration/testing and spare parts list.

1.6 QUALITY ASSURANCE

A. Work identified in this section shall be done under a Quality Assurance Program in accordance with Section 01 4000, "Quality Requirements."

B. The Supplier's Quality Assurance Program shall control a combination of design, materials, preparation, fabrication, inspection, testing, cleaning, packaging, and shipping that have to be done correctly to ensure the production of an acceptable finished product.

C. Supplier shall maintain a Quality Control Program.

1.7 QUALIFICATIONS

A. The Liquid Roughing Filtration Unit shall be furnished by a firm qualified, accredited, and regularly engaged in this type of Work. Supplier shall maintain shop and facilities suitable for fabrication of the filter.

1.8 ENVIRONMENTAL REQUIREMENTS

A. Design the liquid filter to operate in the environmental conditions specified in Section 01 8116, "Facility Environmental Requirements." Seismic requirements are located in Section 13 4800, "Sound, Vibration, and Seismic Control."

PART 2 PRODUCTS

2.1 GENERAL

A. All products and manufacturers may be substituted with approved equal products in accordance with Section 01 2500, "Substitution Procedures."

1. All substituted products or manufacturers must be submitted to LANL for review and approval.

2. Submit product data and catalog cut sheets for substituted products or manufacturers.

B. Surface coatings shall be in accordance with Section 09 9600, "Special Coatings."

C. Material of Construction Compatibility: Selection of fasteners and interfacing components (bolts, nuts, washers, unions, gaskets, etc) shall be based on required performance (e.g., strength, fluid compatibility) and avoidance of potential for galvanic corrosion (e.g., connection/contact of dissimilar metals).

2.2 DATASHEETS

A. See the datasheet in Attachment 1 regarding requirements for the Liquid Roughing Filtration Unit and specification details:

1. DS-001 for FLT-1101.

2.3 DRAWINGS

A. Complete process piping and instrumentation diagram (P&ID) for Liquid Roughing Filtration Unit.

B. Detailed, dimensioned general arrangement drawing(s) to indicate all piping runs, show all valves and instrumentation and maintenance access clearances.

C. Size (length, width, height of Liquid Roughing Filtration Unit).

D. Equipment list with manufacturer's names, model numbers, and catalog cut sheets.

2.4 PERFORMANCE AND DESIGN CONDITIONS

A. The LLW system shall consist of a single Liquid Roughing Filtration Unit. The filter is sized for 100 percent of the design flow of the designated process stream.

B. The LLW influent stream is fed to the roughing filters at a nominal design rate of 50 gpm (with the potential for a feed rate of up to 100 gpm), has a pH in the range of 6 to 9, and a composition as shown in the referenced process documents.

C. The Liquid Roughing Filtration Unit is a cylindrical stainless steel housing that contains a filter screen with a defined pore size to capture particulate 150 microns and greater.

D. The roughing filter shall have the capability to be mechanically cleaned in place. The filter shall have a magnetically coupled actuator to mechanically clean the filter element.

E. The filter pressure vessel shall have a maximum rating of 150 psig and a maximum operating temperature of 120 °F and pressure relief valve set at 125 psig.

PART 3 EXECUTION

3.1 INSTALLATION

A. Unload with equipment having sufficient lifting capacity to avoid damage to the Liquid Roughing Filtration Unit.

B. The Liquid Roughing Filtration Unit and associated equipment shall be installed in accordance with applicable codes, regulations, and standards identified below (see Section 01 4200, "Abbreviations and Acronyms, Definitions, and References"):

1. 10 CFR 830;
2. 29 CFR 1910;
3. 40 CFR 264, Subpart J;
4. *New Mexico Administrative Code*, Title 20, "Environmental Protection," Chapter 4, "Hazardous Waste," Part 1, "Hazardous Waste Management;"
5. *ASME Boiler and Pressure Vessel Code* (ASME B&PV), Section VIII – Division 1;
6. ASME B16.5;
7. ASNT SNT-TC-1A;
8. AWS D1.1/D1.1M; and
9. AWS D1.6.

C. No modifications shall be made to the filter pressure vessel without prior written approval. This includes any welding on pressure vessel shells, adding penetrations in the pressure vessel structure, or repairing damage which might affect the integrity of the pressure vessel.

3.2 TESTING

A. General:

1. The Subcontractor shall qualify Inspection and Test Personnel performing acceptance inspections and testing. In addition, the Subcontractor shall document all qualifications.

2. The results of inspections and tests shall be documented and submitted to the Subcontractor Technical Representative for review..

B. Nondestructive Examinations:

1. Structural-steel welds shall be visually examined, as a minimum, in accordance with AWS D1.1/D1.1M and shall meet the acceptance criteria stated in AWS D1.1/D1.1M. Additional NDE testing requirements shall be as shown on drawings or as required by AWS D1.1/D1.1M.

2. NDE personnel shall be qualified to American Society of Nondestructive Testing (ASNT) SNT-TC-1A.

C. Final Inspections:

1. Final inspection shall be performed in accordance with the Seller's standard practices. At a minimum, the Seller shall verify that the pressure vessel's critical dimensions, as identified in the associated datasheet.

D. Factory Acceptance Testing (FAT):

1. The Liquid Roughing Filtration Unit shall be hydrostatically tested.

2. Before performing the FAT, a FAT procedure shall be submitted to LANL for review and approval.

3. The results of the FAT shall be documented and submitted to LANL for review and approval before final acceptance of the Liquid Roughing Filtration Unit.

4. The FAT performed by the Seller shall include, as a minimum and not limited to, a hydro-test in which the Liquid Roughing Filtration Unit pressure vessel is filled with water and then pressurized.

E. Inspection and Test Plan/Report Forms:

1. An inspection and operational testing plan/report form shall be prepared to govern inspection and final operations test activities.

2. Inspection forms shall contain, at a minimum, sign-offs for appropriate test and inspection personnel, including quality assurance; measuring and test equipment (M&TE) number and due date; and a reference to the inspection criteria (for example, drawing number or specification number). Seller's standard forms can be used provided the above information is included in the document.

3. Inspection and test result forms shall summarize the scope of the inspection, results, and the findings, if any.

4. Test plans and reports shall be submitted as deliverables to LANL.

5. System shall be tested, hydrostatically, to the pressures indicated in this specification without indication of leakage. Equipment containing stainless steel shall be hydro-tested with water having a chloride content

not exceeding 20 ppm. The hydrostatic test shall be made conducted in accordance with ASME B&PV Section VIII Division 1.

6. Before shipment, electric panels shall be assembled, wired, and functionally tested at the Seller's facility. All equipment will be operated during testing.

7. Certified copies of the test results shall be furnished to LANL for approval before shipment.

F. Engage a factory authorized service representative to support commissioning.

3.3 SCHEDULES

A. To be provided by Subcontractor upon award.

Liquid Filters Data Sheets

AECOM	DS-001, LLW Roughing Filtration Unit				Specification No. 43 2243	
	Rev.	By	Date	Comment	Sheet	Date
	~~	~~~	~~~	~~~	1 of 1	~~~
					Checked By	Approved By
					~~	~~~
					Purchase Order	
Project RLWTF-UP					Requisition No.	

PFD #	C55864, Sheet D-6000	Stream No.	1 (FLT Feed); 2 (FLT Concentrate); 5 (FLT Permeate)
P&ID #	C55864, Sheet D-6010	Quality Assurance Level	General Service

Operating Conditions:			Rev
Location (Indoors/Outdoors)		Indoors	~~~
Ambient temperature	(°F)	50-85	~~~
Operation	(Continuous/Intermittent)	Continuous	~~~

			Rev
Operation	- Days per year	145	~~~
	- Hours per day	6	~~~
Elevation	ft ASL	7500	~~~
Environment	- Radioactive	Yes	~~~
	- Toxic	Yes	~~~
	- Corrosive	Yes	~~~
	- Flammable	No	~~~

Filter Unit Design Data	Tag No. FLT-1101			Rev
Design Capacity (Max)	(gpm)	*	100	~~~
Housing Design Temp (Max)	(°F)	*		~~~
Housing Design Pressure (Min/Max)	(psig)	*		~~~
Housing Material of Construction			SST	~~~
Filter Element Material of Construction			SST	~~~
Filter Media			Slotted Wedge Wire	~~~
Filter Media Retention	micron		150	~~~
Seal Material		*		~~~

Filter Feedstream Conditions			Rev
Phase		Liquid	~~~
Operating Capacity (Nom)	(gpm)	50	~~~
Operating Temperature (Nom)	(° F)	77	~~~
Operating Temperature (Max)	(° F)	120	~~~
Operating Pressure	(psig)	50	~~~
Specific Gravity	SG	1.01	~~~
Viscosity (Max @ 77 °F)	cp	0.88	~~~
pH Range	pH	6.0 - 9.0	~~~
Composition		Note 5	~~~

Filter Element Cleaning Data			Rev
Cleaning Method		Note 3	~~~
Cleaning Disc Material		*	~~~
Controller		Note 4	~~~
Controller Electrical	Volt/Hz/Phase	110/60/1	~~~

Interface Data and Weights			Rev
Inlet Connection Size	(in)	3	~~~
Outlet Connection Size	(in)	3	~~~
Purge Connection Size	(in)	2	~~~
Connection Type (Inlet/Outlet/Purge)		Note 6	~~~
Purge Valve Required	(Yes/No)	Yes	~~~
Purge Valve Type		Note 1	~~~
Service Air Connection Size	(in)	1/2	~~~
Service Air Connection Type		NPT	~~~
Mounting Stand Required	(Yes/No)	Yes	~~~
Liquid Roughing Filtration Unit	(lb)	200	~~~

Comments/Notes:

* Denotes data to be supplied by vendor.

1. Roughing Filtration Unit shall include a manually operated purge valve. Purge valve to be configured as a 2" flanged 2-way ball valve.
2. Recommended Vendor and Model: Eaton Filtration, LLC, Magnetically Coupled Filter (MCF), or equivalent based on performance characteristics.
3. Mechanically self-cleaning filter, pneumatically actuated, with a compressed air service requirement of 80 psi at 5 cfm.
4. Roughing Filtration Unit shall include an electric timer control system.
5. For composition of the feedstream see system material balance 60239831-PCAL-001.
6. Interface connections (Inlet/Outlet/Purge) shall be flanged (150#, raised face or 300# if required by the subcontractors design). Inlet/outlet connections shall be on the same side of the filtration unit.

END OF SECTION

SECTION 43 2260

LIQUID SAMPLERS

PART 1 GENERAL

1.1 SECTION INCLUDES

A. It is the intent of this document to contract with a Vendor to furnish the Fixed Volume Sample Panel and Automatic Sampler units to meet the required criteria outlined in this specification.

1. It shall be the responsibility of the Subcontractor to flow down the requirements described within this specification to the equipment Supplier. Subcontractor shall review Supplier information for compliance with this specification prior to submitting information to LANL.

B. The purpose of the sampler units is to provide accurate samples of liquids.

C. The following is a summary of Supplier responsibilities described in this specification:

1. Provide fixed volume sample panel and automatic sampler units in accordance with:

a. This specification,
b. Supplier's LANL-approved drawings, and
c. Other referenced documents.

2. Furnish design data required by this specification to document the fixed volume and automatic sampler units design.

3. Procure equipment, materials, or supplies to complete the Work, unless otherwise stated.

4. Test and inspect, as required, by this specification and referenced standards.

5. Furnish the data required by this specification to document that required tests and inspections have been performed.

6. Package, ship, and deliver the sampler units and related equipment.

7. Provide LANL full access to the facility for performing random or scheduled inspections and/or surveillance of Work performed.

D. Appurtenances shall meet ASTM B31.3 for "normal" service.

1.2 RELATED SECTIONS

A. Section 01 2500, "Substitution Procedures."

B. Section 01 4000, "Quality Requirements."

C. Section 01 4200, "Abbreviations and Acronyms, Definitions, and References."

D. Section 01 8116, "Facility Environmental Requirements."

1.3 ABBREVIATIONS AND ACRONYMS, DEFINITIONS, AND REFERENCES

A. Refer to Section 01 4200, "Abbreviations and Acronyms, Definitions, and References."

B. Codes, specifications, and standards referred to by number or title form a part of this specification to the extent required. Use codes, specifications, and standards referenced of the latest revision at the time of award of contract, unless otherwise stated.

1.4 PROCESS DOCUMENTS

A. Drawing C55864, Sheet D-6035, "MFV and ISOLOK Sampler Diagram."

B. 60239831-PCAL-001, *LLW Bounding Material Balance.*

1.5 SUBMITTALS

A. Equipment list with manufacturer's name, model numbers, and catalog cut sheets.

B. Provide reference to LANL Project ID Number, LANL Contract Number, Component Number, Component Title, and Drawing Number on all submittals.

C. Submit the following in accordance with the requirements of Exhibit I:

1. Drawings, Calculations, and Supporting Data:

a. Submit design drawings, calculations, and supporting data before beginning fabrication of sampler units. LANL will review and comment on design calculations and drawings. The LANL review does not release the Supplier from responsibility to design and fabricate the sampler units in accordance with applicable standards, regulations, and this specification. Include assumptions and input/output data with the calculations. If computer calculations are performed, include the name of the calculation program and the version number.

b. Provide logic diagrams and a Sequence of Operation that describe the operation of the Samplers.

2. Quality Assurance/Quality Control:

a. Notifications. Notify LANL at least seven days in advance for Acceptance Testing and Final Inspection.

b. Submit a Lower Tier Service Plan if outside Subcontractors will perform some of the Work. Provide LANL with the name, address, telephone number, and point of contact for outside services that the Supplier intends to use on this project. Identify the specific Work requirements of this specification that will be performed by those outside services.

c. Submit a Fabrication Schedule.

d. Material Control Procedure. Before fabrication, submit for LANL approval a material control procedure to be used in the execution of the Work. Describe the control methods and traceability documentation in the procedure used by the Supplier to handle and monitor the use of controlled materials, such as stainless steel. Address in the procedure items such as procurement controls, segregation of materials, and traceability of materials from receipt at the shop through processing and final assembly.

3. Design Changes:

a. Submit a written request to LANL for any proposed technical changes, exceptions, and/or deviations to this specification or other contract documents. Do not implement proposed changes, exceptions, or deviations until the LANL Subcontract Technical Representative (STR) provides written approval.

b. Conflicts: Notify LANL, as soon as possible, in the event of conflicts among the specifications, drawings, and/or the manufacturer's recommended processes or instructions.

4. Warranty: Supplier is to guarantee the liquid samplers and associated equipment at design conditions and warrant that materials and workmanship, plus apparatus supplied, if any, are in accordance with Contract document requirements.

5. Provide Operations & Maintenance Manual, with detailed instructions for performance of any required maintenance activities, including as a minimum: lubrication, refurbishment/overhaul, calibration/testing and spare parts list.

D. Subcontractor shall use listed components unless calculations are provided in accordance with ASME requirements for unlisted components.

1.6 QUALITY ASSURANCE

A. Work identified in this section shall be done under a Quality Assurance Program in accordance with Section 01 4000, "Quality Requirements."

B. The Supplier's Quality Assurance Program shall control a combination of design, materials, preparation, fabrication, inspection, testing, cleaning, packaging, and shipping that have to be done correctly to ensure the production of an acceptable finished product.

C. Supplier shall maintain a Quality Control Program.

1.7 QUALIFICATIONS

A. Liquid Sampler units shall be furnished by a firm qualified, accredited, and regularly engaged in this type of Work. Supplier shall maintain shop and facilities suitable for fabrication of the liquid samplers.

1.8 ENVIRONMENTAL REQUIREMENTS

A. Design the liquid sampler units to operate in the environmental conditions specified in Section 01 8116, "Facility Environmental Requirements."

PART 2 PRODUCTS

2.1 PRODUCT OPTIONS AND SUBSTITUTIONS

A. Alternate products may be accepted in accordance with Section 01 2500, "Substitution Procedures."

2.2 GENERAL

A. ISOLOK Series SAA Automatic Sampler Specifications:

SAMPLERS		
SMP-1104	SMP-1705	SMP-1716
SMP-1212	SMP-1708	

1. Sample Volume per cycle: 8 cc.
2. Maximum Particle size: 7 mm.
3. Electrical Requirements: N/A.
4. Line Mounting: ANSI flange.
5. Compressed Air Requirements: 60 psig.
6. Material Construction: 316 Stainless Steel.
7. Plunger Seals: EPDM Rubber.
8. Net Weight: 8 – 10 lbs.
9. Cylinder Material: Halar.
10. Controller: Model MPC-3 Manual Controller

B. MFV Fixed Volume Sample Panel:

SAMPLERS		
SMP-1106	SMP-1410	SMP-1707
SMP-1203	SMP-1412	SMP-1709
SMP-1306	SMP-1414	SMP-1711
SMP-1310	SMP-1504	
SMP-1408	SMP-1706	

1. Sample Series: MFV-84.
2. Switching Valve size: 3/8 in.
3. Inlet/Outlet Connections: 1/2 in.
4. Standard Valve: 316 ss.
5. Pressure/Temperature: 1800 psi@ 300°F.
6. Fill Needle O.D.: 3/16" tube stock.
7. Vent Needle O.D.: 3/16" tube stock.
8. Bottle Type: Clear Boston Round Glass with Septa Cap
9. Bottle Size: 16 oz.
10. Septum Type: Teflon Coated Silicone
11. Carbon Canister: Available as an option
12. Fixed Volume: 400ml
13. Sample Cooler: None.
14. Spring Return Block Valve: Available as an option
15. Seal Material: EPDM.
16. Vent Check Valve: Yes.

2.3 MANUFACTURERS

A. Sentry Equipment Corporation.

2.4 PERFORMANCE AND DESIGN CONDITIONS

A. For composition of process stream to be sampled see system material balance 60239831-PCAL-001.

PART 3 EXECUTION

3.1 EXAMINATIONS

A. General:

1. The Subcontractor shall qualify Inspection Personnel performing acceptance inspections. In addition, the Subcontractor shall document all qualifications.

2. The results of inspections shall be documented and submitted to the Subcontractor Technical Representative for review..

B. Nondestructive Examinations:

1. Structural-steel welds shall be visually examined, as a minimum, in accordance with AWS D1.1/D1.1M and shall meet the acceptance criteria stated in AWS D1.1/D1.1M. Additional NDE testing requirements shall be as shown on the drawings or as required by AWS D1.1/D1.1M.

C. Final Inspections:

1. Final inspection shall be performed in accordance with the Seller's standard practices.

3.2 INSTALLATION – GENERAL

A. The liquid samplers, and associated equipment, shall be installed in accordance with applicable codes, regulations, and standards (see Section 01 4200, "Abbreviations and Acronyms, Definitions, and References")

B. No modifications shall be made to the liquid samplers without prior written approval.

3.3 TESTING

A. Factory Acceptance Testing (FAT)

1. Before performing the FAT, a FAT procedure shall be submitted to LANL for review and approval.

2. The results of the FAT shall be documented and submitted to LANL for review and approval before final acceptance of the liquid samplers.

B. Inspection and Test Plan/Report Forms:

1. An inspection and operational testing plan/report form shall be prepared to govern inspection and final operations test activities.

2. Inspection forms shall contain, at a minimum, sign-offs for appropriate test and inspection personnel, including quality assurance; measuring and test equipment (M&TE) number and due date; and a reference to the inspection criteria (for example, drawing number or specification number).

Seller's standard forms can be used provided the above information is included in the document.

3. Inspection and test result forms shall summarize the scope of the inspection, results, and the findings, if any.

4. Test plans and reports shall be submitted as deliverables to LANL.

5. Certified copies of the test results shall be furnished to LANL for approval before shipment

C. Engage a factory-authorized service representative to support commissioning and train Owner's maintenance personnel to adjust, operate, and maintain liquid samplers.

3.4 SCHEDULES

A. To be provided by Subcontractor upon award.

END OF SECTION

SECTION 43 3113

LIQUID PURIFICATION FILTERS

PART 1 GENERAL

1.1 SUMMARY

A. It is the intent of this document to contract with a Vendor to furnish a Liquid Microfiltration Unit that meets the required criteria outlined in this specification. The Liquid Microfiltration Unit will be installed in the low-level waste (LLW) RLWTF process. Throughout this specification, the term "Liquid Microfiltration Unit" includes the associated concentration tank.

1. It shall be the responsibility of the Subcontractor to flow down the requirements described within this specification to the equipment Supplier. Subcontractor shall review Supplier information for compliance with this specification prior to submitting information to LANL.

B. The purpose of the Liquid Microfiltration Unit is to prevent suspended solids (turbidity) carry-over into the Reverse Osmosis Unit and the Low Temperature Evaporator.

C. The following is a summary of Supplier responsibilities described in this specification:

1. Design and fabricate a Liquid Microfiltration Unit and related equipment in accordance with:

   a. This specification,
   b. Supplier's LANL-approved drawings, and
   c. Other referenced documents.

2. Furnish design data required by this specification to document Liquid Microfiltration Unit design.

3. Procure equipment, materials, or supplies to complete the work, unless otherwise stated.

4. Test and inspect, as required, by this specification and referenced standards.

5. Furnish the data required by this specification to document that required tests and inspections have been performed.

6. Package, ship, and deliver the Liquid Microfiltration Unit and related equipment.

7. Provide LANL full access to the facility for performing random or scheduled inspections and/or surveillance of work performed.

1.2 RELATED SECTIONS

A. Section 01 2500, "Substitution Procedures."

B. Section 01 4000, "Quality Requirements."

C. Section 01 4200, "Abbreviations and Acronyms, Definitions, and References."

D. Section 01 8116, "Facility Environmental Requirements."

E. Section 09 9600, "Special Coatings."

F. Section 13 4800, "Sound, Vibration, and Seismic Control."

G. Section 26 0700, "Induction Motors – 500HP and Smaller."

1.3 ABBREVIATIONS AND ACRONYMS, DEFINITIONS, AND REFERENCES

A. Refer to Section 01 4200, "Abbreviations and Acronyms, Definitions, and References."

B. Drawing C55864, Sheet D-6000, "Process Flow Diagram."

C. Drawing C55864, Sheet D-6013, "Microfiltration System TK-1102 P&ID."

D. Drawing C55864, Sheet D-6014, "Microfiltration System Microfilter P&ID."

E. Drawing C55864, Sheet D-6015, "Microfiltration System Clean-In-Place Skid P&ID."

F. 60239831-PCAL-001, *LLW Bounding Material Balance*.

1.4 SUBMITTALS

A. Provide reference to LANL Project ID Number, LANL Contract Number, Component Number, Component Title, and Drawing Number on all submittals.

B. Submit the following in accordance with the requirements of Exhibit I:

1. Drawings, Calculations, and Supporting Data:

a. Submit design drawings, calculations, and supporting data before beginning fabrication of Liquid Microfiltration Unit. Design drawings shall indicate the location of anchor points. LANL will review and comment on design calculations and drawings. The LANL review does not release the Supplier from responsibility to design and fabricate the Liquid Microfiltration Unit in accordance with applicable standards, regulations, and this specification. Include assumptions and input/output data with the calculations. If computer calculations are performed, include the name of the calculation program and the version number.

b. Provide logic diagrams and a Sequence of Operation that describe the operation of the Liquid Microfiltration Unit.

c. Provide logic diagrams and a Sequence of Operation that describe the operation of the Clean-In-Place system.

d. Allowable nozzle loads necessary for pipe stress analysis shall be supplied by the subcontractor to the contractor for review 30 days prior to scheduled installation date.

2. Quality Assurance/Quality Control:

a. Notifications. Notify LANL at least seven days in advance for Acceptance Testing and Final Inspection.

b. Submit a Lower Tier Service Plan if outside Subcontractors will perform some of the work. Provide LANL with the name, address, telephone number, and point of contact for outside services that the Supplier intends to use on this project. Identify the specific work requirements of this specification that will be performed by those outside services.

c. Submit a Fabrication Schedule.

d. Material Control Procedure. Before fabrication, submit for LANL approval a material control procedure to be used in the execution of the work. Describe the control methods and traceability documentation in the procedure used by the Supplier to handle and monitor the use of controlled materials, such as stainless steel and welding filler rod. Address in the procedure items such as procurement controls, segregation of materials, and traceability of materials from receipt at the shop through processing and final assembly.

e. Fabrication Procedures. Submit a copy of:

1) Welding Procedure Specifications (WPS),
2) Welding Procedure Qualification Record (WPQR),
3) Welding and Nondestructive Examination (NDE) Personnel Listing,
4) Liquid Penetrant Test Procedure,
5) Radiographic Test Procedure, and
6) Leak Test Procedure.

f. Certifications. Submit a copy of:

1) Welder Performance Qualification Records and
2) NDE Personnel Certifications
3) Material certifications for steel (CMTRs), weld filler materials, and certify the chloride content (C of C) of materials used in fabrication of stainless.

g. Test Reports. Submit a copy of:

1) Liquid Penetrant Test Report,
2) Radiographic Test Report,
3) Leak Test Report,
4) Protective Coating Test Report (if applicable), and
5) Certificate for B31.3 system.

h. Shipping Submittals. Submit a copy of:

1) Supplier's Vessel Cleaning Procedure,
2) Supplier's Packaging Procedure, and
3) Bill of Lading with the shipment of Liquid Microfiltration Unit.

3. Design Changes:

a. Submit a written request to LANL for any proposed technical changes, exceptions, and/or deviations to this specification or other Contract documents. Do not implement proposed changes, exceptions, or deviations until the LANL Subcontractor Technical Representative (STR) provides written approval.

b. Conflicts: Notify LANL, as soon as possible, in the event of conflicts among the specifications, drawings, and/or the manufacturer's recommended processes or instructions.

4. Warranty: Supplier is to guarantee the Liquid Microfiltration Unit and associated equipment at design conditions and warrant that materials and workmanship, plus apparatus supplied, if any, are in accordance with Contract document requirements.

5. Provide Operations & Maintenance Manual, with detailed instructions for performance of any required maintenance activities, including as a minimum: lubrication, refurbishment/overhaul, calibration/testing and spare parts list.

1.5 QUALITY ASSURANCE

A. Work identified in this section shall be done under a QAP in accordance with Section 01 4000, "Quality Requirements."

B. The Supplier's QAP shall control a combination of design, materials, preparation, fabrication, inspection, testing, cleaning, packaging, and shipping that have to be done correctly to ensure the production of an acceptable finished product.

C. Supplier shall maintain a Quality Control Program.

1.6 QUALIFICATIONS

A. The Liquid Microfiltration Unit and associated equipment shall be furnished by a firm qualified, accredited, and regularly engaged in this type of Work. Supplier shall maintain shop and facilities suitable for fabrication of the Liquid Microfiltration Unit.

1.7 ENVIRONMENTAL REQUIREMENTS

A. Design the Liquid Microfiltration Unit and associated equipment to operate in the environmental conditions specified in Section 01 8116, "Facility Environmental Requirements." Seismic requirements are located in Section 13 4800, "Sound, Vibration, and Seismic Control."

PART 2 PRODUCTS

2.1 GENERAL

A. Alternate products may be accepted in accordance with Section 01 2500, "Substitution Procedures."

B. Surface coatings shall be in accordance with Section 09 9600, "Special Coatings."

C. Material of Construction Compatibility: Selection of fasteners and interfacing components (bolts, nuts, washers, unions, gaskets, etc) shall be based on required performance (e.g., strength, fluid compatibility) and avoidance of potential for galvanic corrosion (e.g., connection/contact of dissimilar metals).

D. Stand-alone Programmable Logic Controller control for the Liquid Microfiltration Unit (Allen-Bradley preferred) shall be furnished.

E. Provide an approved means for the Liquid Microfiltration Unit controller to communicate with LANL's control system.

F. All monitored signals will be communicated to LANL's control system.

G. LANL's control system will be able to select the Liquid Microfiltration Unit and enable/disable its operation.

H. A single point (480 VAC) termination for incoming power shall be provided. A single, lockable, disconnecting device to isolate incoming power shall also be provided.

I. A sketch is included in Attachment 1 which illustrates the general arrangement and identifies the system interfaces of the Liquid Microfiltration Unit.

J. ASME Boiler and Pressure Vessel Section VIII, Division 1 Stamped. Provide NBIC Registration and Number.

2.2 DATASHEETS

A. See datasheets in Attachment 2 for specific design and operating requirements.

2.3 DRAWINGS

A. Complete process piping and instrumentation diagram (P&ID) for Liquid Microfiltration Unit.

B. Detailed, dimensioned general arrangement drawing(s) to indicate all piping runs, show all valves and instrumentation and maintenance access clearances.

C. Size (length, width, height of Liquid Microfiltration Unit).

D. Equipment list with manufacturer's names, model numbers, and catalog cut sheets.

2.4 PERFORMANCE AND DESIGN CONDITIONS

A. The LLW system has one Liquid Microfiltration Unit. The LLW Liquid Microfiltration Unit is sized for 100 percent of the design flow of the designated process streams.

B. The streams that feed the Liquid Microfiltration Unit have been adjusted to approximately a pH of 10.8, and have the composition shown in the referenced process documents.

C. The microfilters are tubular type membrane filters with defined pore size rated "absolute" for particle capture of particulate of 0.1 microns and greater.

D. The microfilters shall be operated in cross-flow mode such that rejected particles are continuously carried away from the membrane surface, thereby minimizing fouling. Microfilters are operated in conjunction with a Reaction Tank that both feeds the microfilter and receives back the concentrate. In the LLW process, concentrate return containing up to 5 wt% suspended solids is bled off frequently to prevent the solids content of circulating slurry from becoming excessive. System shall be provided with a densitometer to provide operational feedback for control of suspended solids in streams which may have variable total dissolved solid content.

E. The LLW stream is fed to the Liquid Microfiltration Unit, specifically to the concentration tank, at a nominal operational rate of 37 gpm producing a nominal permeate rate of 32 gpm and sludge rate of 5 gpm. The sludge rate may be lower depending on how much total suspended solids is in the influent stream.

F. The filter pressure vessels shall be rated at 150 psig at a maximum operating temperature of 120 °F. Typical inlet pressure is 45 psig. All vessels shall be ASME B&PV Section VIII. Vendor shall verify and provide rating for supplied system.

G. The microfilters are to be equipped for automatic air-operated back-pulsing at 15-20 minute intervals to reverse fouling and restore filtrate flux. Air pressure (12 psig max) is used to force filtrate backwards through the membrane. Vendor shall verify required air pressure and flow for system.

H. Over time, back-pulsing may become ineffective. Microfilter systems are to be equipped with tanks to prepare chemical clean-in-place solutions (5 wt% H_2SO_4 and 5 wt% NaOH) on an as needed basis. Vendor shall recommend cleaning chemicals with concentration.

I. The Liquid Microfiltration Unit shall be equipped with design features (tank, pumps, etc.) to meet the hydraulic requirements of transporting filtrate to the intended destination as shown on the drawings. This shall be assessed by the vendor and incorporated into the vendor's Liquid Microfiltration Unit package. The vendor shall also coordinate their design with the appropriate piping vendor to ensure adequate transport line sizes between the microfilters and intended destination.

J. Pressure relief (ASME B31.3) included if feed pump is capable of exceeding design pressure of any component. Pressure relief for any B&PV Section VIII vessel must be in accordance with B&PV Section VIII requirements. System design shall include pressure relief devices if any components could be over-pressurized, including single point failure (e.g., membrane filter rupture).

K. The concentration tank, provided with the liquid microfilter, shall have a top equipped with the vendors required nozzles and any additional nozzles or penetrations required by LANL as indicated on Drawing C55864, Sheet D-6013, "Microfiltration System TK-1102 P&ID."

L. Pump vibrations shall be isolated and flexible couplers shall be incorporated.

2.5 MANUFACTURERS

A. Siemens.

B. Spintek.

PART 3 EXECUTION

3.1 INSTALLATION

A. Unload with equipment having sufficient lifting capacity to avoid damage to the Liquid Microfiltration Unit.

B. The Liquid Microfiltration Unit and associated equipment shall be installed in accordance with applicable codes, regulations, and standards identified below (see Section 01 4200, "Abbreviations and Acronyms, Definitions, and References"):

1. 10 CFR 830;
2. 29 CFR 1910;
3. 40 CFR 264, Subpart J;
4. *New Mexico Administrative Code*, Title 20, "Environmental Protection," Chapter 4, "Hazardous Waste," Part 1, "Hazardous Waste Management;"
5. *ASME Boiler and Pressure Vessel Code* (ASME B&PV), Section VIII, Division 1;
6. ASME B16.11;
7. ASME B16.25;
8. ASME B31.3 Fluid Service Category Normal;

9. ASNT SNT-TC-1A;

10. ASTM D 5162;

11. AWS D1.6; and

12. AWS D1.1/D1.1M.

C. No modifications shall be made to any filter pressure vessel without prior written approval. This includes any welding on pressure vessel shells, adding penetrations in the pressure vessel structure, or repairing damage which might affect the integrity of the pressure vessel.

D. All connections to Microfilter Package shall be Class 150# ANSI flanges; or 300# ANSI flanges if required by the subcontractor design.

3.2 TESTING

A. General:

1. The Subcontractor shall qualify Inspection and Test Personnel performing acceptance inspections and testing. In addition, the Subcontractor shall document all qualifications.

2. The results of inspections and tests shall be documented and submitted to the Subcontractor Technical Representative for review..

B. Nondestructive Examinations:

1. Structural-steel welds shall be visually examined, as a minimum, in accordance with AWS D1.1/D1.1M and shall meet the acceptance criteria stated in AWS D1.1/D1.1M. Additional NDE testing requirements shall be as shown on drawings or as required by AWS D1.1/D1.1M.

2. NDE Personnel shall be qualified to American Society of Nondestructive Testing (ASNT) SNT-TC-1A.

3. Pipe welding shall be visually examined in accordance with ASME B31.3.

C. Final Inspections:

1. Final inspection shall be performed in accordance with the Seller's standard practices. At a minimum, the Seller shall verify that the critical dimensions of all equipment conform to those in the associated datasheet.

D. Factory Acceptance Testing (FAT):

1. The Liquid Microfiltration Unit shall be hydrostatically tested in accordance with ASME BP&V Section VIII-Division 1.

2. Before performing the FAT, a FAT procedure shall be submitted to LANL for review and approval.

3. The results of the FAT shall be documented and submitted to LANL for review and approval before final acceptance of the Liquid Microfiltration Unit.

4. The FAT performed by the Seller shall include, as a minimum and not limited to, a hydro-test in which the Liquid Microfiltration Unit pressure vessels are filled with water and then pressurized.

5. The Seller shall provide qualified Inspectors per ASNT SNT-TC-1A for all NDE inspections and for operational tests in this section.

E. Inspection and Test Plan/Report Forms:

1. An inspection and operational testing plan/report form shall be prepared to govern inspection and final operations test activities.

2. Inspection forms shall contain, at a minimum, sign-offs for appropriate test and inspection personnel, including quality assurance; measuring and test equipment (M&TE) number and due date; and a reference to the inspection criteria (for example, drawing number or specification number). Seller's standard forms can be used provided the above information is included in the document.

3. Inspection and test result forms shall summarize the scope of the inspection, results, and the findings, if any.

4. Test plans and reports shall be submitted as deliverables to LANL.

5. Before shipment, electric panels shall be assembled, wired, and functionally tested at the Seller's facility. All equipment will be operated during testing.

6. Each electrical motor shall be tested as required by Section 26 0700, "Induction Motors – 500HP and Smaller."

7. Certified copies of the test results shall be furnished to LANL for approval before shipment.

8. ASME B31.3 Certification of piping system by examiner.

9. ASME P&PV Section VIII manufacturer's data reports.

F. Engage a factory authorized service representative to support commissioning.

3.3 SCHEDULES

A. To be provided by Subcontractor upon award.

System Interfaces of the Liquid Microfiltration Unit

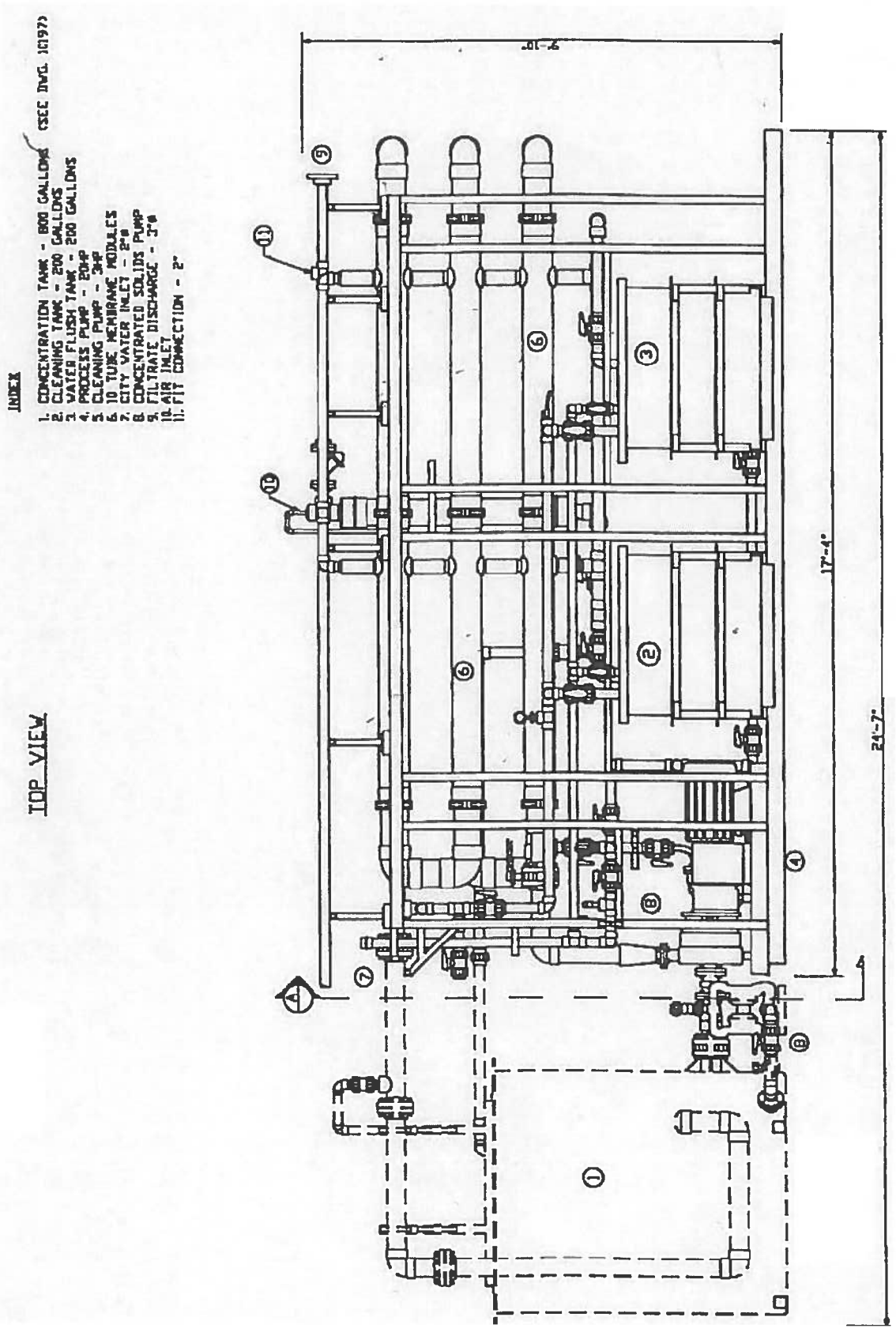

Liquid Purification Filters Data Sheets

AECOM	DS-001, LLW Microfiltration Unit				Specification No. 43 3113	
	Rev.	By	Date	Comment	Sheet	Date
	~~	~~~	~~~	~~~	1 of 3	~~~
					Checked By	Approved By
					~~	~~~
					Purchase Order	
Project RLWTF-UP					Requisition No.	

PFD #	C55864, Sheet D-6000	Stream No.	11, 12, 19, 22 and 23
P&ID #	C55864, Sheet D-6013 & D-6014	Quality Assurance Level:	General Service

Operating Conditions:			Rev
Location (Indoors/Outdoors)		Indoors	~~~
Ambient temperature	(°F)	50-85	~~~
Operation	(continuous/intermittent)	Continuous	~~~
Elevation	ft ASL	7500	~~~

Operating Conditions:			Rev
Operation	- Days per year	145	~~~
	- Hours per day	6	~~~
Environment	- Radioactive	Yes	~~~
	- Toxic	Yes	~~~
	- Corrosive	Yes	~~~
	- Flammable	No	~~~

Microfiltration Unit Feedstream Design Conditions (Stream 11)			
Phase		Liquid	~~~
Operating Capacity (Nom)	(gpm)	37	~~~
Operating Temp (Nom)	(° F)	77	~~~
Operating Temp (Max)	(° F)	120	~~~
Specific Gravity	SG	1.01	~~~
pH	pH	10.8	~~~
Solids Content	(wt%)	1.1	~~~
Suspended Solids	(mg/L)	7100	~~~
Composition		Note 1	~~~

Microfilter Feedstream Design Conditions (Stream 19)			
Phase		Liquid	~~~
Operating Capacity (Nom)	(gpm)	319	~~~
Operating Temp (Nom)	(° F)	77	~~~
Operating Temp (Max)	(° F)	120	~~~
Specific Gravity	SG	1	~~~
pH	pH	10.8	~~~
Solids Content	(wt%)	0.4	~~~
Suspended Solids	(mg/L)	352	~~~
Composition		Note 1	~~~

Microfiltration Unit Sludge Design Conditions (Stream 12)			
Phase		Liquid	~~~
Operating Capacity (Nom)	(gpm)	5	~~~
Operating Temp (Nom)	(° F)	77	~~~
Operating Temp (Max)	(° F)	120	~~~
Specific Gravity	SG	1.03	~~~
pH	pH	10.8	~~~
Solids Content	(wt%)	5.4	~~~
Suspended Solids	(mg/L)	51600	~~~
Composition		Note 1	~~~

Microfilter Concentrate Design Conditions (Stream 22)			
Phase		Liquid	~~~
Operating Capacity (Nom)	(gpm)	287	~~~
Operating Temp (Nom)	(° F)	77	~~~
Operating Temp (Max)	(° F)	120	~~~
Specific Gravity	SG	1	~~~
pH	pH	10.8	~~~
Solids Content	(wt%)	0.4	~~~
Suspended Solids	(mg/L)	391	~~~
Composition		Note 1	~~~

Microfilter Permeate Design Conditions (Stream 23)			
Phase		Liquid	~~~
Operating Capacity (Nom)	(gpm)	32	~~~
Operating Temp (Nom)	(° F)	77	~~~
Operating Temp (Max)	(° F)	120	~~~
Specific Gravity	SG	1	~~~
pH	pH	10.8	~~~
Solids Content	(wt%)	0.4	~~~
Suspended Solids	(mg/L)	0	~~~
Composition		Note 1	~~~

AECOM

DS-001, LLW Microfiltration Unit				Specification No. 43 3113	
Rev.	By	Date	Comment	Sheet	Date
~~	~~~	~~~	~~~	2 of 3	~~~
				Checked By	Approved By
				~~	~~~
				Purchase Order	
Project RLWTF-UP				Requisition No.	

Microfiltration Unit Design Data			
Design Capacity	(gpm) *	36	~~~
Module Quantity	*		~~~
Tubes per Module	*		~~~
Material of Construction (Wetted Parts)	*		~~~

Reaction/Concentration Tank	Tag No.	TK-1102	
Type	*		~~~
Manufacturer	*		~~~
Tank Diameter	(in) *		~~~
Tank Height	(in) *		~~~
Tank Volume (Operating)	(gal) *	881	~~~
Tank Volume (Total)	(gal) *		~~~
Material Of Construction	*		~~~
Cover Required	(yes/no)	Yes	~~~
Operating Pressure (Nom)	(psig) *		~~~
Design Pressure (Min/Max)	(psig) *		~~~
Operating Temperature (Nom)	(°F) *		~~~
Design Temperature (Min/Max)	(°F) *		~~~

Microfilter	Tag No.	FLT-1201	
Filter Type	*		~~~
Filter Rating	(micron) *		~~~
Filter Efficiency	(%) *		~~~
Filter Material	*		~~~
Housing Material of Construction	*		~~~
Housing Operating Pressure (Nom)	(psig) *		~~~
Housing Design Pressure (Min/Max)	(psig) *		~~~
Housing Operating Temperature (Nor	(°F) *		~~~
Housing Design Temperature (Min/M	(°F) *		~~~

Waste Feed Pump	Tag No.	P-1201	
Type	*		~~~
Manufacturer	*		~~~
Model No.	*		~~~
Capacity	(gpm) *		~~~
TDH	(ft) *		~~~
NPSHR	(ft) *		~~~
Design Temperature	(°F) *		~~~
Design Pressure	(psig) *		~~~
Material Of Construction	*		~~~
Electrical	(Volt/Hz/Phase) *		~~~
Motor Size	(hp) *		~~~
Design Power (air)	(x psig @ x scfm) *		~~~

Sludge Withdrawal Pump	Tag No.	P-1709	
Type	*		~~~
Manufacturer	*		~~~
Model No.	*		~~~
Capacity	(gpm) *		~~~
TDH	(ft) *		~~~
NPSHR	(ft) *		~~~
Design Temperature	(°F) *		~~~
Design Pressure	(psig) *		~~~
Material Of Construction	*		~~~
Electrical	(Volt/Hz/Phase) *		~~~
Motor Size	(hp) *		~~~
Design Power (air)	(x psig @ x scfm) *		~~~

AECOM	DS-001, LLW Microfiltration Unit				Specification No. 43 3113	
	Rev.	By	Date	Comment	Sheet	Date
	~~	~~~	~~~	~~~	3 of 3	~~~
					Checked By	Approved By
					~~	~~~
					Purchase Order	
Project RLWTF-UP					Requisition No.	

Process Interface Data				Process Interface Data			
Influent Line (Tank Tap)				**Level Instrumentation (Tank Tap)**			
Connection Size	(in)	1 1/2	~~~	Connection Size	(in)	3	~~~
Connection Type	*		~~~	Connection Type	*		~~~
Connection Material	*		~~~	Connection Material	*		~~~
Sludge Discharge Line				**Pressure Instrumentation (Pipe Tap)**			
Connection Size	(in)	1 1/2	~~~	Connection Size	(in)	1/2	~~~
Connection Type	*		~~~	Connection Type	*		~~~
Connection Material	*		~~~	Connection Material	*		~~~
Sample Recirculation Line (Tank Tap)				**Utility Interface Data**			
Connection Size	(in)	1/2	~~~	**Electrical Service**	(Volt/Hz/Phase) *	480/60/3	~~~
Connection Type	*		~~~		(amp) *		~~~
Connection Material	*		~~~				
				Water (Non-Potable)			
Permeate Discharge Line				Flow Rate	(gpm @ 30 psi) *		~~~
Connection Size	(in)	2	~~~	Connection Size	(in) *	1	~~~
Connection Type	*		~~~	Connection Type	*		~~~
Connection Material	*		~~~	Connection Material	*		~~~
Sludge Recirculation Line (Pipe Tap)				**Compressed Air**			
Connection Size	(in)	1/2	~~~	Flow Rate	(cfm @ 100 psig) *		~~~
Connection Type	*		~~~	Connection Size	(in) *	1/2	~~~
Connection Material	*		~~~	Connection Type	*		~~~
				Connection Material	*		~~~
Vent (Tank Tap)							
Connection Size	(in)	1	~~~				
Connection Type	*		~~~	**Interface Physical Data & Weights**			
Connection Material	*		~~~	**Microfiltration Unit**			
				Weight	(lb) *	18,000	~~~
Inspection Port (Tank Tap)				Nominal Dimensions (L x W x H)	(ft) *	25 x 6 x 10	~~~
Connection Size	(in)	6	~~~				
Connection Type	*		~~~				
Connection Material	*		~~~				
Pressure Relief/Overflow (Tank Tap)							
Connection Size	(in)	2	~~~				
Connection Type	*		~~~				
Connection Material	*		~~~				

Comments/Notes:

* Denotes data to be supplied/confirmed by vendor

1. For composition of process streams see system material balance 60239831-PCAL-001.
2. Microfiltration Unit shall be Siemens Model EFC-1200, or equivalent based on performance characteristics.

AECOM	DS-002, Clean-In-Place (CIP) System				Specification No. 43 3113	
	Rev.	By	Date	Comment	Sheet	Date
	~~	~~~	~~~	~~~	1 of 2	~~~
					Checked By	Approved By
					~~	~~~
					Purchase Order	
Project RLWTF-UP					Requisition No.	

PFD #	C55864, Sheet D-6000	Stream No.	NA
P&ID #	C55864, Sheet D-6015	Quality Assurance Level	General Service

Operating Conditions:		Rev			Rev
Location (Indoors/Outdoors)	Indoors	~~~	Operation - Days per year	145	~~~
Ambient Temperature (°F)	50-85	~~~	- Hours per day	6	~~~
Operation (continuous/intermittent)	Intermittent	~~~	Environment - Radioactive	Yes	~~~
Elevation ft ASL	7500	~~~	- Toxic	Yes	~~~
			- Corrosive	Yes	~~~
			- Flammable	No	~~~

Microfiltration Unit CIP Design Data		
Type *		~~~
Manufacturer *		~~~
Model No. *		~~~
Design Capacity (gpm @ 60 psi) *		~~~
Material of Construction (Wetted Parts) *		~~~
Cleaning Chemicals	Note 1	~~~

Chemical Tank Tag No. TAC-4200/4201			Chemical Pump Tag No. *		
Type *		~~~	Type *		~~~
Manufacturer *		~~~	Manufacturer *		~~~
Model No. *		~~~	Model No. *		~~~
Quantity *	2	~~~	Capacity (gpm) *		~~~
Size (L x W x H) (in) *		~~~	TDH (ft) *		~~~
Capacity (gal) *		~~~	NPSHR (ft) *		~~~
Material Of Construction *		~~~	Design Temperature (°F) *		~~~
Cover Required (yes/no)	Yes	~~~	Design Pressure (psig) *		~~~
Design Pressure (Min/Max) (psig) *		~~~	Material Of Construction *		~~~
Design Temperature (Min/Max) (°F) *		~~~	Electrical (Volt/Hz/Phase) *		~~~
			Motor Size (hp) *		~~~
			Design Power (air) (x psig @ x scfm) *		~~~

Process Interface Data			Utility Interface Data		
Chemical Feed Line			**Electrical Service** (Volt/Hz/Phase) *		~~~
Quantity	1	~~~	(FLA) *		~~~
Connection Size (in) *		~~~			
Connection Type *		~~~			
Connection Material *		~~~			
Tank Vent					
Quantity (per Tank)	1	~~~			
Connection Size (in)	1	~~~			
Connection Type *		~~~			
Connection Material *		~~~			

AECOM	DS-002, Clean-In-Place (CIP) System				Specification No. 43 3113	
	Rev.	By	Date	Comment	Sheet	Date
	~~	~~~	~~~	~~~	2 of 2	~~~
					Checked By	Approved By
					~~	~~~
					Purchase Order	
Project RLWTF-UP					Requisition No.	

Interface Physical Data & Weights							
CIP System							
Weight	(lb) *	Note 2	~~~				
Nominal Dimensions (L x W x H)	(in) *	Note 2	~~~				

Comments/Notes:

* Denotes data to be supplied/confirmed by vendor.

1. Cleaning chemicals are Sodium Hydroxide and Sulfuric Acid.
2. Microfiltration Clean-In-Place System shall be integral with Microfiltration Unit.

END OF SECTION

SECTION 43 3236

MIX-BED ION-EXCHANGE VESSELS

PART 1 GENERAL

1.1 SECTION INCLUDES

A. This specification establishes the technical requirements for the design, materials of construction, fabrication, testing, shipment, and quality assurance of the ion-exchange and carbon adsorption vessels, supports, components, and appurtenances. Collectively, these components comprise the Low-Level Waste Polishing System (LPS).

1. It shall be the responsibility of the Subcontractor to flow down the requirements described within this specification to the equipment Supplier. Subcontractor shall review Supplier information for compliance with this specification prior to submitting information to LANL.

B. The LPS shall consist of two bi-functional strong-base anion (SBA) resin ion-exchange columns for selective perchlorate removal, two SBA/strong acid cation mixed bed ion-exchange columns for polishing (Cu and Zn removal), and two activated carbon adsorption columns for organic removal. The column pairs are to be installed in series (lead/lag configuration).

C. The following is a summary of Supplier responsibilities described in this specification:

1. Design and fabricate the LPS in accordance with:

a. This specification,

b. Tank standard American Society of Mechanical Engineers Boiler and Pressure Vessel (ASME B&PV) Section X,

c. Supplier's LANL-approved drawings, and

d. Other referenced documents.

2. Furnish design data required by this specification to document design of the LPS.

3. Procure equipment, materials, or supplies to complete the work, unless otherwise stated.

4. Test and inspect as required by this specification and referenced standards.

5. Furnish the data required by this specification to document that required tests and inspections have been performed.

6. Package, ship, and deliver the LPS.

7. Provide LANL full access to the facility for performing random or scheduled inspections and/or surveillance of work performed.

1.2 RELATED SECTIONS

A. Section 01 2500, "Substitution Procedures."

B. Section 01 4000, "Quality Requirements."

C. Section 01 4200, "Abbreviations and Acronyms, Definitions, and References."

D. Section 01 8116, "Facility Environmental Requirements."

E. Section 09 9600, "Special Coatings."

F. Section 13 4800, "Sound, Vibration, and Seismic Control."

G. Section 01 4444 "Offsite Welding & Joining Requirements."

H. Section 01 4445 "Onsite Welding & Joining Requirements."

1.3 ABBREVIATIONS AND ACRONYMS, DEFINITIONS, AND REFERENCES

A. Refer to Section 01 4200, "Abbreviations and Acronyms, Definitions, and References."

B. Drawing C55864, Sheet D-6000, "Process Flow Diagram."

C. Drawing C55864, Sheet D-6021, "Polishing System Pump and FLT-1401 P&ID."

D. Drawing C55864, Sheet D-6022, "Polishing System FLT-1403 and FLT-1405 P&ID."

E. 60239831-PCAL-001, *LLW Bounding Material Balance*.

1.4 SUBMITTALS

A. Submit the following in accordance with the requirements of Exhibit I:

1. Drawings, Calculations, and Supporting Data:

a. Submit design drawings, calculations, and supporting data before beginning LPS fabrication. Design drawings shall indicate the location of anchor points. LANL will review and comment on design calculations and drawings. The LANL review does not release the Supplier from responsibility to design and fabricate the LPS vessels in accordance with applicable standards, applicable regulations, and this specification. Include assumptions and input/output data with the calculations. If computer calculations are performed, include the name of the calculation program and the version number.

b. Allowable nozzle loads necessary for pipe stress analysis shall be supplied by the subcontractor to the contractor for review 30 days prior to scheduled installation date.

c. Installation/removal plan for LPS vessels shall include anchorage interface details.

2. Quality Assurance/Quality Control:

a. Notifications. Notify LANL at least seven days in advance for Acceptance Testing and Final Inspection.

b. Submit a Lower Tier Service Plan if outside Subcontractors will perform some of the Work. Provide LANL with the name, address, telephone number, and point of contact for outside services that the Supplier intends to use on this project. Identify the specific Work requirements of this specification that will be performed by those outside services.

c. Submit a Fabrication Schedule.

d. Material Control Procedure. Before fabrication, submit for LANL approval a material control procedure to be used in the execution of the Work. Describe the control methods and traceability documentation in the procedure used by the Supplier to handle and monitor the use of controlled materials, such as stainless steel and welding filler rod. Address in the procedure items such as procurement controls, segregation of materials, and traceability of materials from receipt at the shop through processing and final assembly.

e. Fabrication Procedures. Submit a copy of:

1) Welding Procedure Specifications (WPS),
2) Welding Procedure Qualification Record (WPQR),
3) Welding and Nondestructive Examination (NDE) Personnel Listing,
4) Liquid Penetrant Test Procedure,
5) Radiographic Test Procedure, and
6) Leak Test Procedure.

f. Certifications. Submit a copy of:

1) Welder Performance Qualification Records,
2) NDE Personnel Certifications, and
3) Material certifications for steel (CMTRs), weld filler materials, and certify the chloride content (C of C) of materials used in fabrication of stainless steel.

g. Test Reports. Submit a copy of:

1) Liquid Penetrant Test Report,
2) Radiographic Test Report,
3) Leak Test Report, and
4) Protective Coating Test Report (if applicable).

h. Shipping Submittals. Submit a copy of:

1) Supplier's Vessel Cleaning Procedure,
2) Supplier's Packaging Procedure, and
3) Bill of Lading with the LPS shipment

3. Design Changes:

a. Submit a written request to LANL for any proposed technical changes, exceptions, and/or deviations to this specification or other Contract documents. Do not implement proposed changes, exceptions, or deviations until the LANL Subcontract Technical Representative (STR) provides written approval.

b. Conflicts: Notify LANL, as soon as possible, in the event of conflicts among the specifications, drawings, and/or the manufacturer's recommended processes or instructions.

4. Warranty: Supplier is to guarantee the LPS and associated equipment at design conditions and warrant that materials and workmanship, plus apparatus supplied, if any, are in accordance with Contract document requirements.

5. Provide Operations & Maintenance Manual, with detailed instructions for performance of any required maintenance activities, including as a

minimum: lubrication, refurbishment/overhaul, calibration/testing and spare parts list.

1.5 QUALITY ASSURANCE

A. Work identified in this section shall be done under a QAP in accordance with Section 01 4000, "Quality Requirements."

B. The Supplier's QAP shall control a combination of design, materials, preparation, fabrication, inspection, testing, cleaning, packaging, and shipping that have to be done correctly to ensure the production of an acceptable finished product. Supplier shall maintain a Quality Control Program that complies with *ASME Boiler and Pressure Vessel Code* (ASME B&PV), Section X.

C. Supplier shall maintain a Quality Control Program.

1.6 QUALIFICATIONS

A. The LPS shall be furnished by a firm qualified, accredited, and regularly engaged in this type of Work. Supplier shall maintain shop and facilities suitable for fabrication of the LPS and components.

1.7 ENVIRONMENTAL REQUIREMENTS

A. Design LPS to operate in the environmental conditions specified in Section 01 8116, "Facility Environmental Requirements." Seismic requirements are located in Section 13 4800, "Sound, Vibration, and Seismic Control."

PART 2 PRODUCTS

2.1 PRODUCT OPTIONS AND SUBSTITUTIONS

A. Alternate products may be accepted in accordance with Section 01 2500, "Substitution Procedures."

2.2 GENERAL

A. The purpose of the LPS is to remove dissolved solids and constituents of concern in the feed stream by trapping in sacrificial vessels.

B. The feed stream to the LPS will be the permeate stream of a reverse osmosis unit with pH adjusted to approximately 6.5. The LPS vessels will be designed to accommodate a minimum flow rate of 25 gpm.

C. Polished product should be de-ionized quality water with a conductivity of no more than 5 micro-seimens (micro-mhos).

D. See datasheet DS-001 in Attachment 1 regarding specific requirements.

E. Surface coatings shall be in accordance with Section 09 9600, "Special Coatings."

F. Material of Construction Compatibility: Selection of fasteners and interfacing components (bolts, nuts, washers, unions, gaskets, etc) shall be based on required performance (e.g., strength, fluid compatibility) and avoidance of potential for galvanic corrosion (e.g., connection/contact of dissimilar metals).

G. Anchorage. The LPS is a portion of a larger process installed in the RLWTF-UP LLW Treatment Building. The building is poured-in-place concrete with a concrete floor. Anchorage design for the LPS vessels shall resist sliding and overturning loads generated by an earthquake. The design basis earthquake

multipliers for equipment anchored to concrete are 0.468g horizontal and 0.195 vertical.

H. LPS vessels shall be portable. A means for conveying LPS vessels during installation and removal that is compatible with the anchorage features shall be identified. The means of conveying shall also be compatible with the method of spent vessel disposition identified by LANL.

I. ASME Boiler and Pressure Vessel Section VIII, Division 1 Stamped. Provide NBIC Registration and Number.

2.3 DRAWINGS

A. Detailed, dimensioned general arrangement drawing(s) to indicate all piping runs, show all valves and instrumentation and maintenance access clearances.

B. Size (length, width, height) of the LPS.

C. Equipment list with manufacturer's names, model numbers, and catalog cut sheets.

2.4 MANUFACTURERS

A. Pentair Water.

B. Siemens.

PART 3 EXECUTION

3.1 EXAMINATIONS

A. General:

1. The Subcontractor shall qualify Inspection Personnel performing acceptance inspections. In addition, the Subcontractor shall document all qualifications.

2. The results of inspections shall be documented and submitted to the Subcontractor Technical Representative for review..

B. Nondestructive Examinations:

1. Structural-steel welds shall be visually examined, as a minimum, in accordance with AWS D1.1/D1.1M and shall meet the acceptance criteria stated in AWS D1.1/D1.1M. Additional NDE testing requirements shall be as shown on the drawings or as required by AWS D1.1/D1.1M.

2. NDE Personnel shall be qualified to American Society of Nondestructive Testing (ASNT) SNT-TC-1A.

C. Final Inspections:

1. Final inspection shall be performed in accordance with the Seller's standard practices. At a minimum, the Seller shall verify that the critical dimensions of all equipment conform to those in the associated datasheet.

3.2 INSTALLATION - GENERAL

A. Unload with equipment having sufficient lifting capacity to avoid damage to the LPS and components.

B. The LPS and components shall be installed in accordance with applicable codes, regulations, and standards identified below (see Section 01 4200, "Abbreviations and Acronyms, Definitions, and References"):

1. 10 CFR 830.122;
2. AISC, *Manual of Steel Construction—Allowable Stress Design*;
3. ANSI FCI 70-2;
4. ASME B&PV, Section X;
5. ASME B16.5;
6. ASNT SNT-TC-1A;
7. ASTM D 5162;
8. AWS D1.1/D1.1M;
9. DOE-STD-1020;
10. DOE-STD-1021; and
11. LANL *Engineering Standards Manual* (ISD 342-100).

C. No modifications shall be made to any equipment without prior written approval from LANL. This includes any welding, additional penetrations in any structure, or repairing damage which might affect the integrity of the equipment.

3.3 TESTING

A. Factory Acceptance Testing (FAT):

1. Before performing the FAT, a FAT procedure shall be submitted to LANL for review and approval.
2. The results of the FAT shall be documented and submitted to LANL for review and approval before final acceptance of the LPS.
3. The FAT performed by the Seller shall include, as a minimum and not limited to, a hydro-test in which the LPS pressure vessels are filled with water and then pressurized.
4. The pressure vessels of the LPS shall be hydrostatically tested in accordance with ASME B&PV Section X.

B. Inspection and Test Plan/Report Forms:

1. An inspection and operational testing plan/report form shall be prepared to govern inspection and final operations test activities.
2. Inspection forms shall contain, at a minimum, sign-offs for appropriate test and inspection personnel, including quality assurance; measuring and test equipment (M&TE) number and due date; and a reference to the inspection criteria (for example, drawing number or specification number). Seller's standard forms can be used provided the above information is included in the document.
3. Inspection and test result forms shall summarize the scope of the inspection, results, and the findings, if any.
4. Test plans and reports shall be submitted as deliverables to LANL.
5. Certified copies of the test results shall be furnished to LANL for approval before shipment.

C. Engage a factory authorized service representative to support commissioning.

3.4 SCHEDULES

A. To be provided by Subcontractor upon award.

Mixed-Bed Ion-Exchange Vessels Data Sheet

AECOM	DS-001, Ion-Exchange and Carbon Adsorption Vessels				Specification No. 43 3236	
	Rev.	By	Date	Comment	Sheet	Date
	~~	~~~	~~~	~~~	1 of 3	~~~
					Checked By	Approved By
					~~	~~~
					Purchase Order	
Project RLWTF-UP					Requisition No.	

PFD #	C55864, Sheet D-6000	Stream No.	39, 40, 41 and 42
P&ID #	C55864, Sheet D-6021 & D-6022	Quality Assurance Level	General Service

Operating Conditions:			Rev				Rev
Location (Indoors/Outdoors)		Indoors	~~~	Operation	- Days per year	145	~~~
Ambient temperature	(°F)	50-85	~~~		- Hours per day	6	~~~
Operation	(continuous/intermittent)	Intermittent	~~~	Environment	- Radioactive	Yes	~~~
Elevation	ft ASL	7500	~~~		- Toxic	Yes	~~~
					- Corrosive	Yes	~~~
					- Flammable	No	~~~

Feedstream Design Conditions				Feedstream Concentrations			
Phase		Liquid	~~~	Perchlorate	(mg/L)	0.195	~~~
Operating Capacity (Nom)	(gpm)	25	~~~	Copper	(mg/L)	0.000506	~~~
Operating Temp (Nom)	(° F)	77	~~~	Zinc	(mg/L)	0.0336	~~~
Operating Temp (Max)	(° F)	120	~~~	Chemical Oxygen Demand (COD)	(mg/L)	20.5	~~~
Specific Gravity	SG	1	~~~	Total Toxic Organics (TTO)	(mg/L)	6.75	~~~
pH	pH	6.5	~~~	Composition		Note 1	~~~

Perchlorate IX Columns	Tag No.	FLT-1401/1402		Polishing IX Columns	Tag No.	FLT-1403/1404	
Type	*		~~~	Type	*		~~~
Manufacturer	*		~~~	Manufacturer	*		~~~
Capacity	(gpm) *		~~~	Capacity	(gpm) *		~~~
Perchlorate Removal	(%)	100	~~~	Copper & Zinc Removal	(%)	99.99	~~~
Quantity		2	~~~	Quantity		2	~~~
Vessel Diameter	(in) *		~~~	Vessel Diameter	(in) *		~~~
Vessel Height	(in) *		~~~	Vessel Height	(in) *		~~~
Vessel Volume (Operating)	(gal) *		~~~	Vessel Volume (Operating)	(gal) *		~~~
Vessel Volume (Total)	(gal) *		~~~	Vessel Volume (Total)	(gal) *		~~~
Material Of Construction		Fiberglass	~~~	Material Of Construction		Fiberglass	~~~
Operating Pressure (Nom)	(psig) *		~~~	Operating Pressure (Nom)	(psig) *		~~~
Design Pressure (Min/Max)	(psig) *		~~~	Design Pressure (Min/Max)	(psig) *		~~~
Operating Temperature (Nom)	(°F) *		~~~	Operating Temperature (Nom)	(°F) *		~~~
Design Temperature (Min/Max)	(°F) *		~~~	Design Temperature (Min/Max)	(°F) *		~~~
Resin Type		SBA	~~~	Resin Type		SAC/SBA	~~~
Pressure Loss (Max)	psi *		~~~	Pressure Loss (Max)	psi *		~~~

AECOM	DS-001, Ion-Exchange and Carbon Adsorption Vessels				Specification No. 43 3236	
	Rev.	By	Date	Comment	Sheet	Date
	~~	~~~	~~~	~~~	2 of 3	~~~
					Checked By	Approved By
					~~	~~~
					Purchase Order	
Project RLWTF-UP					Requisition No.	

Carbon Adsorption Columns	Tag No.	FLT-1405/1406	
Type	*		~~~
Manufacturer	*		~~~
Capacity	(gpm) *		~~~
COD/TTO Removal	(%)	90	~~~
Quantity		2	~~~
Vessel Diameter	(in) *		~~~
Vessel Height	(in) *		~~~
Vessel Volume (Operating)	(gal) *		~~~
Vessel Volume (Total)	(gal) *		~~~
Material Of Construction		Fiberglass	~~~
Operating Pressure (Nom)	(psig) *		~~~
Design Pressure (Min/Max)	(psig) *		~~~
Operating Temperature (Nom)	(°F) *		~~~
Design Temperature (Min/Max)	(°F) *		~~~
Resin Type		Act. Carbon	~~~
Pressure Loss (Max)	psi *		~~~

Process Interface Data			
Feedwater Line (In and Out)			
Connection Size	(in)	1 1/2	~~~
Connection Type	*		~~~
Connection Material	*		~~~
Connection Location (Vessel Top/Bottom)		Top	~~~
Drain Line			
Connection Size	(in)	2	~~~
Connection Type	*		~~~
Connection Material	*		~~~
Connection Location (Vessel Top/Bottom)		Bottom	~~~
Vacuum/Pressure Relief			
Connection Size	(in) *		~~~
Connection Type	*		~~~
Connection Material	*		~~~
Connection Location (Vessel Top/Bottom)		Top	~~~

Interface Physical Data & Weights			
Perchlorate IX Columns			
Shipping Weight (each column)	(lb) *		~~~
Operating Weight (each column)	(lb) *		~~~
Polishing IX Columns			
Shipping Weight (each column)	(lb) *		~~~
Operating Weight (each column)	(lb) *		~~~
Carbon Adsorption Columns			
Shipping Weight (each column)	(lb) *		~~~
Operating Weight (each column)	(lb) *		~~~

AECOM	DS-001, Ion-Exchange and Carbon Adsorption Vessels				Specification No. 43 3236	
	Rev.	By	Date	Comment	Sheet	Date
	~~	~~~	~~~	~~~	3 of 3	~~~
					Checked By	Approved By
					~~	~~~
					Purchase Order	
Project RLWTF-UP					Requisition No.	

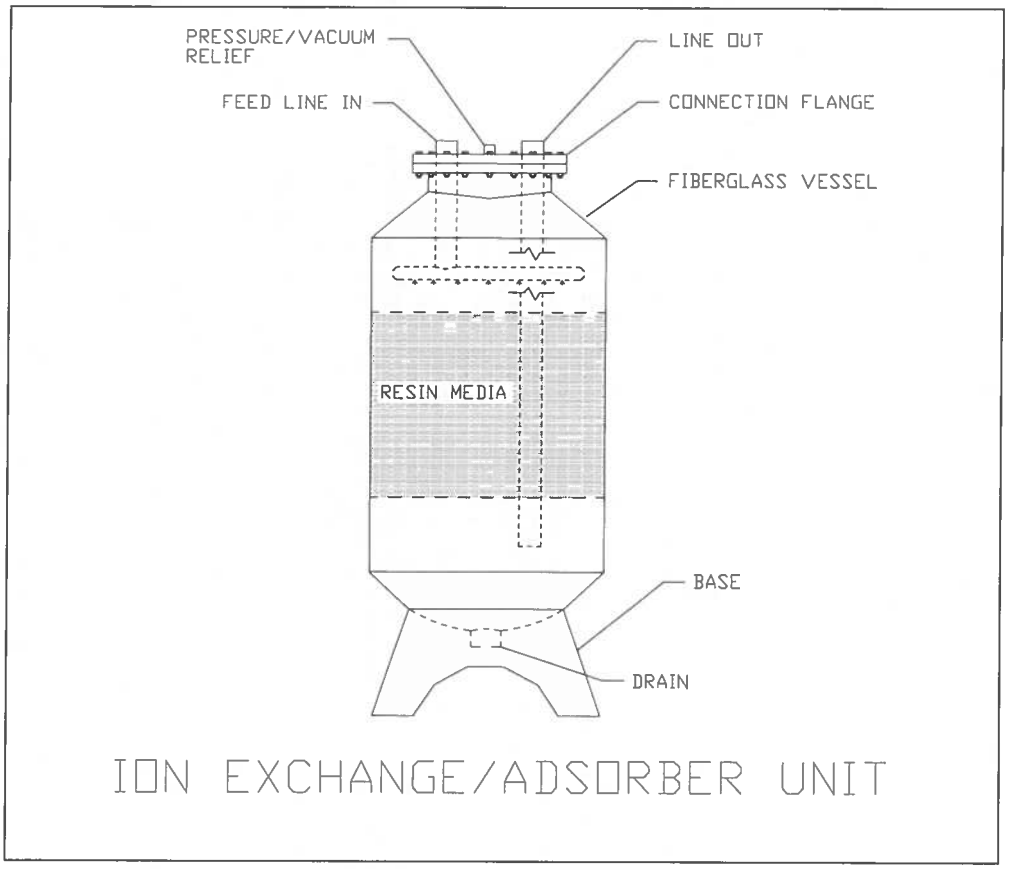

Comments/Notes:

* Denotes data to be supplied by vendor.

1. For composition of feedstream see system material balance 60239831-PCAL-001.
2. Recommended Vendor: Pentair Water, Part No. 31418

END OF SECTION

SECTION 43 3256

REVERSE OSMOSIS PURIFICATION UNITS

PART 1 GENERAL

1.1 SECTION INCLUDES

A. It is the intent of this document to contract with a Vendor to furnish the specified Reverse Osmosis Purification Unit and Clean-In-Place (CIP) System Skid to meet the required criteria outlined in this specification.

1. It shall be the responsibility of the Subcontractor to flow down the requirements described within this specification to the equipment Supplier. Subcontractor shall review Supplier information for compliance with this specification prior to submitting information to LANL.

B. The purpose of the Reverse Osmosis Purification Unit is to remove a nominal 99.5 percent of dissolved solids and constituents of concern in the feed stream to the reverse osmosis unit (i.e., 0.5 percent bleed into the permeate).

C. The following is a summary of Supplier responsibilities described in this specification:

1. Design and fabricate the Reverse Osmosis Purification Unit and CIP System Skid in accordance with:

   a. This specification,
   b. Supplier's LANL-approved drawings, and
   c. Other referenced documents.

2. Furnish design data required by this specification to document Reverse Osmosis Purification Unit and CIP System Skid design.

3. Procure equipment, materials, or supplies to complete the Work, unless otherwise stated.

4. Test and inspect, as required, by this specification and referenced standards.

5. Furnish the data required by this specification to document that required tests and inspections have been performed.

6. Package, ship, and deliver the Reverse Osmosis Purification Unit and CIP System Skid including flexible hoses for connecting Reverse Osmosis Purification Unit to CIP System Skid. Final hose lengths to be provided by LANL during procurement.

7. Provide LANL full access to the facility for performing random or scheduled inspections and/or surveillance of Work performed.

1.2 RELATED SECTIONS

A. Section 01 2500, "Substitution Procedures."

B. Section 01 4000, "Quality Requirements."

C. Section 01 4200, "Abbreviations and Acronyms, Definitions, and References."

D. Section 01 8116, "Facility Environmental Requirements."

E. Section 09 9600, "Special Coatings."

F. Section 13 4800, "Sound, Vibration, and Seismic Control."

G. Section 26 0700, "Induction Motors – 500HP and Smaller."

H. Section 01 4444 "Offsite Welding & Joining Requirements."

I. Section 01 4445 "Onsite Welding & Joining Requirements."

1.3 ABBREVIATIONS AND ACRONYMS, DEFINITIONS, AND REFERENCES

A. Refer to Section 01 4200, "Abbreviations and Acronyms, Definitions, and References."

B. Codes, specifications, and standards referred to by number or title form a part of this specification to the extent required. Use codes, specifications, and standards referenced of the latest revision at the time of award of contract, unless otherwise stated.

C. Drawing C55864, Sheet D-6000, "Process Flow Diagram."

D. Drawing C55864, Sheet D-6018, "Reverse Osmosis System Reverse Osmosis Units P&ID."

E. Drawing C55864, Sheet D-6019, "Reverse Osmosis System TAC-4302 P&ID."

F. 60239831-PCAL-001, *LLW Bounding Material Balance*.

1.4 SUBMITTALS

A. Submit the following in accordance with the requirements of Exhibit I:

1. Drawings, Calculations, and Supporting Data:

a. Submit design drawings, calculations, and supporting data before beginning fabrication of the Reverse Osmosis Purification Unit and CIP System Skid. Design drawings shall indicate the location of anchor points. LANL will review and comment on design calculations and drawings. The LANL review does not release the Supplier from responsibility to design and fabricate the Reverse Osmosis Purification Unit and CIP System Skid in accordance with applicable standards, regulations, and this specification. Include assumptions and input/output data with the calculations. If computer calculations are performed, include the name of the calculation program and the version number.

b. Provide logic diagrams and a Sequence of Operation that describe the operation of the Reverse Osmosis Purification Unit.

c. Provide logic diagrams and a Sequence of Operation that describe the operation of the (CIP) System.

d. Allowable nozzle loads necessary for pipe stress analysis shall be supplied by the subcontractor to the contractor for review 30 days prior to scheduled installation date.

2. Quality Assurance/Quality Control:

   a. Notifications. Notify LANL at least seven days in advance for Acceptance Testing and Final Inspection.

   b. Submit a Lower Tier Service Plan if outside Subcontractors will perform some of the Work. Provide LANL with the name, address, telephone number, and point of contact for outside services that the Supplier intends to use on this project. Identify the specific Work requirements of this specification that will be performed by those outside services.

   c. Submit a Fabrication Schedule.

   d. Material Control Procedure. Before fabrication, submit for LANL approval a material control procedure to be used in the execution of the Work. Describe the control methods and traceability documentation in the procedure used by the Supplier to handle and monitor the use of controlled materials, such as stainless steel and welding filler rod. Address in the procedure items such as procurement controls, segregation of materials, and traceability of materials from receipt at the shop through processing and final assembly.

   e. Fabrication Procedures. If applicable, submit a copy of:

      1) Welding Procedure Specifications (WPS),
      2) Welding Procedure Qualification Record (WPQR) ,
      3) Welding and Nondestructive Examination (NDE) Personnel Listing,
      4) Liquid Penetrant Test Procedure,
      5) Radiographic Test Procedure, and
      6) Leak Test Procedure.

   f. Certifications. If applicable, submit a copy of:

      1) Welder Performance Qualification Records and
      2) NDE Personnel Certifications.

   g. Material certifications for steel (CMTRs), weld filler materials, and certify the chloride content (C of C) of materials used in fabrication of stainless

   h. Test Reports. Submit a copy of:

      1) Liquid Penetrant Test Report ,
      2) Radiographic Test Report,
      3) Leak Test Report, and
      4) Protective Coating Test Report (if applicable).

   i. Shipping Submittals. Submit a copy of:

      1) Supplier's Cleaning Procedure,
      2) Supplier's Packaging Procedure, and
      3) Bill of Lading with the shipment of Reverse Osmosis Purification Unit and CIP System Skid.

3. Design Changes:

   a. Submit a written request to LANL for any proposed technical changes, exceptions, and/or deviations to this specification or

other contract documents. Do not implement proposed changes, exceptions, or deviations until the LANL Subcontract Technical Representative (STR) provides written approval.

b. Conflicts: Notify LANL, as soon as possible, in the event of conflicts among the specifications, drawings, and/or the manufacturer's recommended processes or instructions.

4. Warranty: Supplier is to guarantee the Reverse Osmosis Purification Unit and CIP System Skid and associated equipment at design conditions and warrant that materials and workmanship, plus apparatus supplied, if any, are in accordance with Contract document requirements.

5. Provide Operations & Maintenance Manual, with detailed instructions for performance of any required maintenance activities, including as a minimum: lubrication, refurbishment/overhaul, calibration/testing and spare parts list.

1.5 QUALITY ASSURANCE

A. Work identified in this section shall be done under a Quality Assurance Program in accordance with Section 01 4000, "Quality Requirements."

B. The Supplier's Quality Assurance Program shall control a combination of design, materials, preparation, fabrication, inspection, testing, cleaning, packaging, and shipping that have to be done correctly to ensure the production of an acceptable finished product.

C. Supplier shall maintain a Quality Control Program.

1.6 QUALIFICATIONS

A. The Reverse Osmosis Purification Unit, and CIP System Skid, shall be furnished by a firm qualified, accredited, and regularly engaged in this type of Work. Supplier shall maintain shop and facilities suitable for fabrication of the Reverse Osmosis Purification Unit and CIP System Skid.

1.7 ENVIRONMENTAL REQUIREMENTS

A. Design the Reverse Osmosis Purification Unit and CIP System Skid to operate in the environmental conditions specified in Section 01 8116, "Facility Environmental Requirements." Seismic requirements are located in Section 13 4800, "Sound, Vibration, and Seismic Control."

PART 2 PRODUCTS

2.1 PRODUCT OPTIONS AND SUBSTITUTIONS

A. Alternate products may be accepted in accordance with Section 01 2500, "Substitution Procedures."

2.2 GENERAL

A. See data sheet DS-001 in Attachment 1, regarding requirements for the Reverse Osmosis Purification Unit (ROU-1301) and specification details.

B. See data sheet DS-002 in Attachment 1, regarding requirements for the CIP System Skid (TAC-4302) and specification details.

C. Surface coatings shall be in accordance with Section 09 9600, "Special Coatings."

D. Material of Construction Compatibility: Selection of fasteners and interfacing components (bolts, nuts, washers, unions, gaskets, etc) shall be based on required performance (e.g., strength, fluid compatibility) and avoidance of potential for galvanic corrosion (e.g., connection/contact of dissimilar metals).

E. Stand-alone Programmable Logic Controller control for the Reverse Osmosis and CIP Systems (Allen-Bradley preferred) shall be furnished.

F. Provide an approved means for the equipment controllers for the Reverse Osmosis Purification Unit and the CIP System to communicate with LANL's control system.

G. All monitored signals will be communicated to LANL's control system.

H. LANL's control system will be able to select the Reverse Osmosis Purification Unit or CIP System and enable/disable its operation.

I. A single point (480 VAC) termination for incoming power shall be provided. A single, lockable, disconnecting device to isolate incoming power shall also be provided.

2.3 MANUFACTURERS

A. Siemens.

B. Spintek.

C. AVANTech.

2.4 DRAWINGS

A. Complete process Piping and Instrumentation Diagram (P&ID) for the Reverse Osmosis Purification Unit and the CIP System.

B. Detailed, dimensioned general arrangement drawings to indicate all piping runs, show all valves and instrumentation and maintenance access clearances.

C. Size (length, width, height) of the Reverse Osmosis Purification Unit and the CIP System.

D. Equipment list with manufacturer's names, model numbers, and catalog cut sheets.

2.5 PERFORMANCE AND DESIGN CONDITIONS

A. The feed stream to the Reverse Osmosis Purification Unit will be membrane pretreated (by microfiltration rated to 0.1 micron) and pH adjusted to approximately 7.5. The feed rate to the Reverse Osmosis Purification Unit will be at a nominal operational rate of 33 gpm and shall be designed to accommodate a minimum flow rate of 25 gpm and a maximum flow rate of 40 gpm.

B. The Reverse Osmosis System shall consist of one skid-mounted Reverse Osmosis Purification Unit sized for 100 percent of the design flow of the feed stream. The Reverse Osmosis Purification Unit shall be configured as required to meet flow and permeate quality requirements.

C. The reverse osmosis membrane elements shall be thin-film composite (TFC) membranes. The salt rejection shall be a nominal 99.5 percent based on 1,500-ppm feed at 225 psig and 77 °F.

D. The reverse osmosis element housing shall be of side-port design.

E. Flow meters shall be furnished for both permeate and concentrate streams.

F. A conductivity sensor shall be furnished for the feed, reject, and permeate stream.

G. Local pressure indication shall be furnished for: pre-cartridge filter, post-cartridge filter, reverse osmosis feed pump suction, reverse osmosis feed pump discharge, final permeate, and final concentrate.

H. High-pump discharge pressure switch and high-permeate pressure switch shall be furnished.

I. Additional performance requirements are located on Data Sheets in Attachment 1.

J. Pressure relief (ASME B31.3) included if high-pressure pump is capable of exceeding design pressure of any component.

K. Pump vibrations shall be isolated and flexible couplers shall be incorporated.

PART 3 EXECUTION

3.1 EXAMINATIONS

A. General:

1. The Subcontractor shall qualify Inspection Personnel performing acceptance inspections. In addition, the Subcontractor shall document all qualifications.

2. The results of inspections shall be documented and submitted to the Subcontractor Technical Representative for review..

B. Nondestructive Examinations:

1. Structural-steel welds shall be visually examined, as a minimum, in accordance with AWS D1.1/D1.1M and shall meet the acceptance criteria stated in AWS D1.1/D1.1M. Additional NDE testing requirements shall be as shown on the drawings or as required by AWS D1.1/D1.1M.

2. NDE Personnel shall be qualified to American Society of Nondestructive Testing (ASNT) SNT-TC-1A.

3. Pipe welding shall be visually examined in accordance with ASME B31.3.

C. Final Inspections:

1. Final inspection shall be performed in accordance with the Seller's standard practices. At a minimum, the Seller shall verify the skid's critical dimensions, as identified in the associated datasheet.

3.2 INSTALLATION – GENERAL

A. Unload with equipment having sufficient lifting capacity to avoid damage to the skid-mounted Reverse Osmosis Purification Unit and CIP System Skid.

B. The Reverse Osmosis Purification Unit, and associated equipment, shall be installed in accordance with the applicable codes, regulations, and standards identified below (see Section 01 4200, "Abbreviations and Acronyms, Definitions, and References"):

1. 10 CFR 830.122;
2. ANSI FCI 70-2;
3. ANSI Y14.1;
4. ASME B&PV, Section VIII;
5. ASME B31.3 Fluid Service Category Normal;
6. ASNT SNT-TC-1A;
7. AWS D1.1/D1.1M;
8. AWS D1.6;
9. IEEE Std 43-2000;
10. NEMA MG-1;
11. NFPA 70; and
12. UL 508A.

C. All connections to the Reverse Osmosis Package shall be Class 150 flanges; or Class 300 flanges if required by subcontractor's design.

3.3 TESTING

A. Factory Acceptance Testing (FAT):

1. The Reverse Osmosis Purification Unit pressure vessel shall be hydrostatically tested.
2. Before performing the FAT, a FAT procedure shall be submitted to the Subcontractor Technical Representative for review and approval.
3. The results of the FAT shall be documented and submitted to the Subcontractor Technical Representative for review and approval before final acceptance of the pressure vessel.
4. The FAT performed by the Subcontractor shall include, as a minimum and not limited to, a hydro-test in which the Reverse Osmosis Purification Unit pressure vessel is filled with water and then pressurized.
5. The Seller shall provide qualified Inspectors per ASNT SNT-TC-1A for all NDE inspections and for operational tests in this section.

B. Inspection and Test Plan/Report Forms:

1. An inspection and operational testing plan/report form shall be prepared to govern inspection and final operations test activities.
2. Inspection forms shall contain, at a minimum, sign-offs for appropriate test and inspection personnel, including quality assurance; measuring and test equipment (M&TE) number and due date; and a reference to the inspection criteria (for example, drawing number or specification number). Seller's standard forms can be used provided the above information is included in the document.
3. Inspection and test result forms shall summarize the scope of the inspection, results, and the findings, if any.
4. Test plans and reports shall be submitted as deliverables to LANL.

5. System shall be tested, hydrostatically, to the pressures indicated in this specification without indication of leakage. Equipment containing stainless steel shall be hydro-tested with water having a chloride content not exceeding 20 ppm. The hydrostatic test shall be conducted in accordance with ASME B&PV, Section VIII-Division 1.

6. Before shipment, electric panels shall be assembled, wired, and functionally tested at the Seller's facility. All equipment will be operated during testing.

7. Each electrical motor shall be tested as required by Section 26 0700, "Induction Motors – 500HP and Smaller."

8. Certified copies of the test results shall be furnished to LANL for approval before shipment.

C. Engage a factory authorized service representative to support commissioning.

3.4 SCHEDULES

A. To be provided upon award.

Reverse Osmosis Purification Units Data Sheet

AECOM	DS-001, Reverse Osmosis System				Specification No. 43 3256	
	Rev.	By	Date	Comment	Sheet	Date
	~~	~~~	~~~	~~~	1 of 2	~~~
					Checked By	Approved By
					~~	~~~
					Purchase Order	
Project RLWTF-UP					Requisition No.	

PFD #	C55864, Sheet D-6000	Stream No.	26 (RO Feed); 30 (RO Concentrate); 39 (RO Permeate)
P&ID #	C55864, Sheet D-6018	Quality Assurance Level	General Service

Operating Conditions:			Rev				Rev
Location (Indoors/Outdoors)		Indoors	~~~	Operation	- Days per year	145	~~~
Ambient Temperature	(°F)	50-85	~~~		- Hours per day	6	~~~
Operation	(continuous/intermittent)	Intermittent	~~~	Environment	- Radioactive	Yes	~~~
Elevation	ft ASL	7500	~~~		- Toxic	Yes	~~~
					- Corrosive	Yes	~~~
					- Flammable	No	~~~

Reverse Osmosis Feedstream Design Conditions				Reverse Osmosis Concentrate Design Conditions			
Phase		Liquid	~~~	Phase		Liquid	~~~
Operating Capacity (Nom)	(gpm)	33.5	~~~	Operating Capacity (Nom)	(gpm)	8.4	~~~
Operating Temp (Nom)	(° F)	77	~~~	Operating Temp (Nom)	(° F)	77	~~~
Operating Temp (Max)	(° F)	120	~~~	Operating Temp (Max)	(° F)	120	~~~
Specific Gravity	SG	1	~~~	Solids Content	(wt%)	1.6	~~~
pH	pH	7.5	~~~	Specific Gravity	SG	1.01	~~~
Composition		Note 2	~~~	pH	pH	7.7	~~~
				Composition		Note 2	~~~

Reverse Osmosis Permeate Design Conditions			
Phase		Liquid	~~~
Operating Capacity (Nom)	(gpm)	25.1	~~~
Operating Temp (Nom)	(° F)	77	~~~
Operating Temp (Max)	(° F)	120	~~~
Specific Gravity	SG	1	~~~
pH	pH	6.5	~~~
Composition		Note 2	~~~

Reverse Osmosis Design Data	Tag No.	ROU-1301	
Design Capacity (Product)	(gpm) *	30	~~~
Design Capacity (Feed)	(gpm) *	40	~~~
Vessel Staging	*		~~~
Membrane/Vessel	*		~~~
Membrane Qty	*		~~~
Material of Construction (Wetted Parts)	*		~~~

Pressure Vessels	Tag No.	*		Filter Data	Tag No.	*	
Type		*	~~~	Filter Type		*	Cartridge ~~~
Manufacturer		*	~~~	Filter Rating		(micron) *	5 ~~~
Model No.		*	~~~	Filter Efficiency		(%) *	~~~
Diameter		(in) *	~~~	Filter Material		*	~~~
Height/Length		(in) *	~~~	Pressure Loss (Max)		(psi) *	~~~
Quantity (Per System)		*	~~~	Housing Material Of Construction		*	~~~
Material Of Construction		*	~~~	Housing Operating Pressure (Nom)		(psig) *	~~~
Operating Pressure (Nom)		(psig) *	~~~	Housing Design Pressure (Min/Max)		(psig) *	~~~
Design Pressure (Min/Max)		(psig) *	~~~	Housing Operating Temp (Nom)		(°F) *	~~~
Operating Temperature (Nom)		(°F) *	~~~	Housing Design Temp (Min/Max)		(°F) *	~~~
Design Temperature (Min/Max)		(°F) *	~~~				

AECOM	DS-001, Reverse Osmosis System				Specification No. 43 3256	
	Rev.	By	Date	Comment	Sheet	Date
	~~	~~~	~~~	~~~	2 of 2	~~~
					Checked By	Approved By
					~~	~~~
					Purchase Order	
Project RLWTF-UP					Requisition No.	

Feed Pump	Tag No. P-1303			Membranes			
Type	*		~~~	Type	*		~~~
Manufacturer	*		~~~	Manufacturer	*		~~~
Model No.	*		~~~	Model No.	*		~~~
Capacity	(gpm) *		~~~	Membrane Material	*	TFC	
TDH	(ft) *		~~~	Membrane Salt Rejection (Nom)	(%) *	Note 4	
NPSHR	(ft) *		~~~				
Multi-Stage (Yes/No)	*		~~~				
Number of Stages	*		~~~				
Design Temperature	(°F) *		~~~				
Design Pressure	(psig) *		~~~				
Material Of Construction	*		~~~				
Electrical	(Volt/Hz/Phase) *	480/60/3	~~~				
Motor Size	(hp) *	10	~~~				

Process Interface Data				Utility Interface Data			
Feedstream Line				**Electrical Service**	(Volt/Hz/Phase) *	480/60/3	~~~
Connection Size	(in)	2	~~~		(FLA) *	16	~~~
Connection Type	*		~~~				
Connection Material	*		~~~	**Compressed Air**			
				Flow Rate	(scfm @ 100 psig) *	2	~~~
Concentrate Line				Connection Size	(in) *	1/8	~~~
Connection Size	(in)	1.5	~~~	Connection Type	*		~~~
Connection Type	*		~~~	Connection Material	*		~~~
Connection Material	*		~~~				
Permeate Line							
Connection Size	(in)	1.5	~~~				
Connection Type	*		~~~				
Connection Material	*		~~~				
PRV Vent							
Quantity	*		~~~				
Connection Size	(in) *		~~~				
Connection Type	*		~~~				
Connection Material	*		~~~				

Interface Physical Data & Weights							
Reverse Osmosis Skid							
Weight	(lb) *	4,400	~~~				
Nominal Dimensions (L x W x H)	(in) *	168x32x77	~~~				

Comments/Notes:

* Denotes data to be supplied/confirmed by vendor.

1. Motors <250 hp shall be 480 VAC, 3 phase, 60 hz.
2. For composition of waste streams see system material balance 60239831-PCAL-001.
3. Motor sizes shall be determined during preliminary testing at Seller's facility.
4. The salt rejection shall be a nominal 99.5 percent based on 1,500-ppm feed at 225 psig and 77 oF.
5. Reverse Osmosis Purification Unit shall be Siemens, Model M83R006DSYAD, or equivalent based on performance characteristics.

AECOM	DS-002, Clean-In-Place (CIP) System				Specification No. 43 3256	
	Rev.	By	Date	Comment	Sheet	Date
	~~	~~~	~~~	~~~	1 of 2	~~~
					Checked By	Approved By
					~~	~~~
					Purchase Order	
Project RLWTF-UP					Requisition No.	

PFD #	C55864, Sheet D-6000	Stream No.	NA
P&ID #	C55864, Sheet D-6019	Quality Assurance Level	General Service

Operating Conditions:		Rev			Rev
Location (Indoors/Outdoors)	Indoors	~~~	Operation - Days per year	145	~~~
Ambient Temperature (°F)	50-85	~~~	- Hours per day	6	~~~
Operation (continuous/intermittent)	Intermittent	~~~	Environment - Radioactive	Yes	~~~
Elevation ft ASL	7500	~~~	- Toxic	Yes	~~~
			- Corrosive	Yes	~~~
			- Flammable	No	~~~

RO CIP Design Data	Tag No. SKID-4322				
Type *		~~~			
Manufacturer *		~~~			
Model No. *		~~~			
Design Capacity (gpm @ 60 psi) *		~~~			
Material of Construction (Wetted Parts) *		~~~			
Cleaning Chemicals	Note 2	~~~			

Chemical Tank	Tag No. TAC-4302		Chemical Pump (See Note 5)	Tag No. PAC-4301	
Type *		~~~	Type *		~~~
Manufacturer *		~~~	Manufacturer *		~~~
Model No. *		~~~	Model No. *		~~~
Diameter (in) *		~~~	Capacity (gpm) *		~~~
Height (in) *		~~~	TDH (ft) *		~~~
Capacity (gal) *		~~~	NPSHR (ft) *		~~~
Material Of Construction *		~~~	Design Temperature (°F) *		~~~
Cover Required (yes/no)	Yes	~~~	Design Pressure (psig) *		~~~
Design Pressure (Min/Max) (psig) *		~~~	Material Of Construction *		~~~
Design Temperature (Min/Max) (°F) *		~~~	Electrical (Volt/Hz/Phase) *	480/60/3	~~~
Level Instrumentation Required (yes/no)	Yes	~~~	Motor Size (hp) *	5	~~~
Eductor (See Note 4)					
Size (IPS) *		~~~			
Tank Turnover (per hr) *		~~~			
Flowrate (gpm) *		~~~			
Material *		~~~			

AECOM

DS-002, Clean-In-Place (CIP) System				Specification No. 43 3256	
Rev.	By	Date	Comment	Sheet	Date
~~	~~~	~~~	~~~	2 of 2	~~~
				Checked By	Approved By
				~~	~~~
				Purchase Order	
Project RLWTF-UP				Requisition No.	

Process Interface Data				Utility Interface Data			
Feed Lines (Supply & Return)				**Electrical Service**	(Volt/Hz/Phase) *	480/60/3	~~~
Quantity (Supply)		1	~~~		(FLA) *		~~~
Quantity (Return)		2	~~~				
Connection Size	(in)	1.5	~~~	**Chemical Feed**			
Connection Type	*		~~~	Quantity	*	2	~~~
Connection Material	*		~~~	Flow Rate	(gph) *	20	~~~
				Connection Size	(in) *		~~~
Tank Vent (Tank Tap)				Connection Type	*		~~~
Connection Size	(in)	1	~~~	Connection Material	*		~~~
Connection Type	*		~~~				
Connection Material	*		~~~	**Water (Cold Non-Potable)**			
				Flow Rate	(gpm) *		~~~
Inspection Port (Tank Tap)				Connection Size	(in) *	1/2	~~~
Connection Size	(in)	6	~~~	Connection Type	*		~~~
Connection Type	*		~~~	Connection Material	*		~~~
Connection Material	*		~~~				
Overflow (Tank Tap)							
Connection Size	(in)	1.5	~~~				
Connection Type	*		~~~				
Connection Material	*		~~~				

Interface Physical Data & Weights			
CIP Skid			
Weight	(lb) *	1,250	~~~
Nominal Dimensions (L x W x H)	(in) *	72x41x67	~~~

Comments/Notes:

* Denotes data to be supplied/confirmed by vendor.

1. Motors <250 hp shall be 480 VAC, 3 phase, 60 hz.
2. Cleaning chemicals shall be Sodium Hydroxide and Sulfuric Acid.
3. Reverse Osmosis Clean-In-Place Skid shall be Siemens, Model CIP-30, or equivalent based on performance characteristics.
4. Tank eductor sizing to be provided by vendor.
5. Vendor shall evaluate whether the CIP pump (PAC-4301) is required for the project installation configuration, and if needed select appropriate pump.

END OF SECTION

SECTION 43 4116

ATMOSPHERIC TANKS AND VESSELS

PART 1 GENERAL

1.1 SCOPE

A. This specification establishes the technical requirements for the design, materials of construction, fabrication, testing, shipment, and quality assurance of storage tanks, their supports, components, and appurtenances.

B. This specification concerns the following tanks and vessels detailed on the indicated datasheets:

Tank	Datasheet	Tank	Datasheet	Tank	Datasheet
TK-1101	DS-001	TK-1502	DS-004	TK-1705	DS-008
TK-1301	DS-002	TK-1702	DS-005	TK-1706	DS-009
TK-1304	DS-003	TK-1703	DS-006	TK-1707	DS-010
TK-1501	DS-004	TK-1704	DS-007		

C. The technical requirements of this specification are applicable to containers used primarily for atmospheric or non-pressurized storage of fluids, or storage of fluids at very low gauge pressure. The upper limit of internal pressure for tanks built under this specification is 15 psig (34.6 ft water column).

NOTE: "Internal Pressure" refers to a uniformly distributed internal pressure in tank, and is in addition to the normal varying pressure head due to depth of contained fluid.

D. API Standard 650, *Welded Steel Tanks for Oil Storage*, covers the basic design of steel storage tanks operating at approximately atmospheric pressure (internal pressure up to an equivalent of lid weight is allowed). By following the additional requirements of Appendix F, the internal pressure limitation may be raised to 2-1/2 psig.

E. If internal pressures greater than 2-1/2 psig are required, the additional requirements of API Standard 620, *Design and Construction of Large, Welded, Low-Pressure Storage Tanks,* shall be applied. This Standard covers steel storage tanks up to a maximum internal pressure design limit of 15 psig.

F. These tanks are not intended to support external pressure (internal vacuum). For closed tanks, incorporate a relieving device to prevent the formation of a vacuum inside the tank.

G. The following is a summary of supplier responsibilities described in this specification:

1. Design/fabricate storage tanks in accordance with:
   a. This specification,
   b. API Standard 620 (where applicable),
   c. API Standard 650,
   d. Supplier's Los Alamos National Laboratory (LANL)-approved drawings, and
   e. Other referenced documents.
2. Furnish design data required by this specification to document design of the storage tank.

3. Procure equipment, materials, or supplies to complete the work, unless otherwise stated.

4. Test and inspect as required by this specification, API Standard 650 and API Standard 620 (where applicable).

5. Furnish the data required by this specification to document that required tests and inspections have been performed.

6. Package, ship, and deliver the storage tanks.

7. Provide LANL full access to the facility for performing random or scheduled inspections and/or surveillance of work performed.

1.2 SYSTEM DESCRIPTION

A. General Design Requirements

1. For storage tank operating conditions, design data, and vessel configuration, refer to Attachment 1, "Storage Tank Data Sheet and Sketch."

2. Design, fabricate, test, and label storage tanks in accordance with:

a. This specification;
b. API Standard 620 (when applicable);
c. API Standard 650;
d. Supplier's LANL-approved drawings; and
e. Applicable regulations.

3. If there is a conflict among the above listed requirements, compliance with API Standard 650, API Standard 620, and applicable regulations will take precedence. Bring any conflicts to LANL's attention for resolution.

4. LANL will review and comment on design calculations and drawings. The LANL review does not release the supplier from responsibility to design and fabricate the storage tank in accordance with API Standard 650, API Standard 620, applicable regulations, and this specification.

5. A tank made in accordance with API Standard 650, or in accordance with the additional requirements of API Standard 620, will be identified by a nameplate as specified in the appropriate standard.

B. Containment Boundary Design Requirements

1. Proposed weld joint configurations are to be approved by LANL prior to fabrication, unless LANL chooses to waive this requirement.

2. Identify joints that are to be welded from one side only.

C. Nozzle and Manway Requirements

1. Provide sufficient projection of flanged nozzles to allow removal of flange bolts from either side without removal of insulation (if used).

2. Make nozzles that are used as drains flush with tank interior surface.

3. Refer to Paragraph 2.5 for Nondestructive Examination (NDE) requirements.

D. Structural/Supports

1. Design and construct storage tank foundations in accordance with Appendix B of API Standard 650 supplemented by Appendix C and D of

API Standard 620, as applicable. API Standard 650 tanks will generally need the bottom plate fully supported.

2. Where required, determine the overturning stability of the tank due to wind loading (API Standard 650, Paragraph 3.11).

3. Design storage tanks and foundation to meet requirements for seismic events. Refer to Section 13 4800, "Sound, Vibration, and Seismic Control," for seismic criteria. Also, refer to API Standard 650 (Appendix E) and API Standard 620 (Appendix L).

4. Incorporate lifting features into the storage tank design as required. Design and position lifting features to prevent any strain or distortion of the storage tank. Design lifting features to accept lifting by forklift, crane, or other appropriate device, and label these features appropriately as lifting points.

5. If lifting lugs are not provided as a feature of the design, indicate suitable lifting points on the main storage tank framework. If necessary, provide external strong-backs or other bracing devices.

E. Storage Tank Linings, Coatings, and Insulation

1. Storage tank Supplier shall evaluate the design conditions supplied by LANL and determine whether tank linings, coatings, and/or insulation may be required. If so, Supplier shall recommend the preferred system to LANL for concurrence and approval.

1.3 RELATED SECTIONS

A. Section 01 2500, "Substitution Procedures."

B. Section 01 4000, "Quality Requirements."

C. Section 01 4200, "Abbreviations and Acronyms, Definitions, and References."

D. Section 01 8116, "Facility Environmental Requirements."

E. Section 13 4800, "Sound, Vibration, and Seismic Control."

1.4 ABBREVIATIONS AND ACRONYMS, DEFINITIONS, AND REFERENCES

A. Refer to Section 01 4200, "Abbreviations and Acronyms, Definitions, and References."

B. Drawing C55864, Sheet D-6000, "Process Flow Diagram."

C. Drawing C55864, Sheet D-6012, "Reaction/Precipitation System TK-1101 P&ID."

D. Drawing C55864, Sheet D-6016, "Reverse Osmosis System TK-1301 P&ID."

E. Drawing C55864, Sheet D-6020, "Reverse Osmosis System TK-1304 P&ID."

F. Drawing C55864, Sheet D-6023, "Solids Collection & Concentration System TK-1707 and Pump P&ID."

G. Drawing C55864, Sheet D-6025, "Solids Collection & Concentration System TK-1702 and Pump P&ID."

H. Drawing C55864, Sheet D-6026, "Solids Collection & Concentration System TK-1704 and Pump P&ID."

I. Drawing C55864, Sheet D-6027, "Solids Collection & Concentration System TK-1703 and Pump P&ID."

J. Drawing C55864, Sheet D-6028, "De-Watering System TK-1705 and Pump P&ID."

K. Drawing C55864, Sheet D-6030, "De-Watering System TK-1706 and Pump P&ID."

L. Drawing C55867, Sheet D-6410, "Effluent Storage System TK-1501 P&ID."

M. Drawing C55867, Sheet D-6411, "Effluent Storage System TK-1502 and Pump P&ID."

N. 60239831-MCAL-023, *RLWTF LLW Process Equipment Weights and Sizes.*

O. 60239831-PCAL-001, *LLW Bounding Material Balance.*

1.5 SUBMITTALS

Submit the following in accordance with the requirements of Exhibit I:

A. Provide reference to LANL Project ID Number, LANL Subcontract Number, Storage Tank Number, Storage Tank Title, and Drawing Number on correspondence.

1. Drawings, Calculations, and Supporting Data

a. Submit design drawings, calculations, and supporting data prior to beginning storage tank fabrication. Design drawings shall indicate the location of anchor points. LANL will review and comment on design calculations and drawings. The LANL review does not release the supplier from responsibility to design and fabricate the storage tank in accordance with API Standard 650, API Standard 620 (if applicable), applicable regulations, and this specification. Include assumptions and input/output data with the calculations. If computer calculations are performed, include the name of the calculation program and the version number.

b. Allowable nozzle loads necessary for pipe stress analysis shall be supplied by the subcontractor to the contractor for review 30 days prior to scheduled installation date.

2. Quality Assurance/Quality Control

a. Notifications: Notify LANL at least 7 days in advance for Acceptance Testing and Final Inspection.

b. Submit a Lower Tier Services Plan if outside subcontractors will perform some of the work. Provide LANL with the name, address, telephone number, and point of contact for outside services that the supplier intends to use on this project. Identify the specific work requirements of this specification that will be performed by those outside services.

c. Submit a Fabrication Schedule.

d. Material Control Procedure: Prior to fabrication, submit for LANL approval a material control procedure to be used in the execution of the work. Describe the control methods and traceability documentation in the procedure used by the supplier to handle and monitor the use of controlled materials, such as stainless steel and welding filler rod. Address in the procedure items such as procurement controls, segregation of materials, and traceability of materials from receipt at the shop through processing and final assembly.

e. Fabrication Procedures: If applicable, submit a copy of:

1) Welding Procedure Specifications (WPS),
2) Welding Procedure Qualification Record (WPQR) ,
3) Welding and NDE Personnel Listing,
4) Liquid Penetrant Test Procedure,
5) Radiographic Test Procedure, and
6) Leak Test Procedure.

f. Certifications: Submit a copy of:

1) Welder Performance Qualification Records,
2) NDE Personnel Certifications, and
3) Material certifications for steel, weld filler materials, and certify the chloride content of materials used in fabrication of stainless steel.

g. Test Reports: If applicable, submit a copy of:

1) Liquid Penetrant Test Report,
2) Radiographic Test Report, and
3) Leak Test Report,
4) Protective Coating Test Report.

h. Shipping Submittals: Submit a copy of:

1) Supplier's Vessel Cleaning Procedure,
2) Supplier's Packaging Procedure, and
3) Bill of Lading with the storage tank shipment.

3. Nonconformances

a. Submit a written request to LANL for any proposed technical changes, exceptions, and/or deviations to this specification or other Subcontract documents. Do not implement proposed changes, exceptions, or deviations until the LANL Subcontract Technical Representative (STR) provides written approval.

b. Conflicts: Notify LANL as soon as possible in the event of conflicts among the specifications, drawings, and/or the manufacturer's recommended processes or instructions.

4. Warranty: Supplier is to guarantee the storage tank and associated equipment at design conditions and warrant that materials and workmanship, plus apparatus supplied (if any), are in accordance with Subcontract document requirements.

5. Provide Operations & Maintenance Manual, with detailed instructions for performance of any required maintenance activities, including as a minimum: lubrication, refurbishment/overhaul, calibration/testing and spare parts list.

1.6 QUALITY ASSURANCE

A. Work identified in this section shall be done under a Quality Assurance Program in accordance with Section 01 4000, "Quality Requirements."

B. The Supplier's Quality Assurance Program shall control a combination of design, materials, preparation, fabrication, inspection, testing, cleaning, packaging, and

shipping that have to be done correctly to ensure the production of an acceptable finished product.

C. American Petroleum Institute (API) certified storage tanks shall be furnished by a firm qualified, accredited, and regularly engaged in this type of work. Supplier shall maintain shop and facilities suitable for fabrication of certified storage tanks. Supplier shall maintain a Quality Control Program that complies with *ASME Boiler and Pressure Vessel Code* (B&PV Code) (Section VIII, "Rules for Construction of Pressure Vessels," Appendix 10).

1.7 DELIVERY, STORAGE, AND HANDLING

A. Shipping Preparation: Mode and method of transporting, and the extent of storage tank assembly are to be mutually agreed on by the Supplier and Subcontractor prior to fabrication and delivery of the tank. The packaging procedure submitted for prior approval by the Subcontractor shall be used. For safety considerations, a means of pressure relief is to be provided on the storage tank during shipping to prevent pressure buildup and/or to equalize pressure due to elevation and/or temperature changes.

B. Shipping and Receiving: Provide the Subcontractor with a copy of the bill of lading concurrent with the shipment. Properly and clearly describe the shipment on the bills of lading. At final destination, the Subcontractor will inspect the shipment as necessary to ensure that received items have not been damaged during shipment and that required items and supporting documentation have been received. The receipt inspection by the Subcontractor at Los Alamos constitutes final acceptance.

1.8 SITE CONDITIONS

A. Design the storage tanks to operate in the environmental conditions specified in Section 01 8116, "Facility Environmental Requirements." Seismic requirements are located in Section 13 4800, "Sound, Vibration, and Seismic Control."

PART 2 PRODUCTS

2.1 PRODUCT OPTIONS AND SUBSTITUTIONS

A. Comply with Section 01 2500, "Substitution Procedures."

2.2 MANUFACTURERS

A. AB Tanks.

B. Belding Tank Technologies, Stapco Division.

C. BH Tanks.

D. Denios.

E. General Industries.

F. Siemens.

G. Spokane Industries.

H. Stainless Fabrication, Inc.

I. Stricklin/Baldwin Metals.

J. Superior Tank Company.

2.3 MATERIALS

A. Provide materials complying with API Standard 650 and API Standard 620, as applicable.

B. Protective Linings, Coatings, and Insulation

1. Vessel Supplier shall evaluate the design conditions supplied by LANL and determine whether vessel linings, coatings, and/or insulation may be required. If so, Supplier shall recommend the preferred materials to LANL for concurrence and approval.

2. For carbon-steel tank interior coating use SP-10 blast and two coats of epoxy.

2.4 FABRICATION

A. Protect stainless steel against carbon steel contamination from tooling and fixtures during fabrication.

B. Exercise control during stages of fabrication to minimize exposure of stainless steel to contaminants, in particular to any chloride that might cause stress-corrosion cracking. Avoid chloride-bearing compounds; however, if used, completely remove by thorough cleaning. Do not use compounds, liquids, or markers on stainless steel surfaces that contain more than 250 ppm of chloride content by weight.

C. Material of Construction Compatibility: Selection of fasteners and interfacing components (bolts, nuts, washers, unions, gaskets, etc) shall be based on required performance (e.g., strength, fluid compatibility) and avoidance of potential for galvanic corrosion (e.g., connection/contact of dissimilar metals).

D. Welding: Ensure that welders, welding operators, and tackers are qualified in accordance with ASME B&PV Code (Section IX, "Welding and Brazing Qualifications"). Use welding procedures per B&PV Code (Section IX).

E. Surface Finishes: Exercise care to prevent scratching, abrading, nicking, and denting during receiving, storage, fabrication, and handling.

F. Cleaning:

1. After fabrication is completed, and before testing and inspection, clean, de-scale, and degrease the storage tank and associated components. Clean exterior surfaces, but take particular care to clean the inside of the tank thoroughly. Methods may include cleaning by hot water spray, etc. If a detergent is required, use a detergent that has less than 250 ppm chloride content for stainless steel tanks.

2. Use fresh water with less than 250 ppm chloride content for wash and final rinse. After final rinse, dry inside surfaces using heat, lint-free cloth or other means to ensure cleanliness. If de-ionized water is used for the final rinse, the tank may be allowed to evaporate to dryness. If heat is used for drying stainless steel vessels, do not allow the metal temperature to rise above 250 °F and use de-ionized water for the final rinse before drying.

3. Ensure that the cleanliness of the storage tank meets the approval of the Subcontractor at the time of the final inspection.

2.5 SOURCE QUALITY CONTROL

A. General:

1. The Seller shall qualify Inspection Personnel performing acceptance inspections. In addition, the Seller shall document all qualifications.

2. The results of inspections shall be documented and submitted to the Construction Manager for review and approval before acceptance. Construction Manager's approval indicates concurrence that results verify compliance with the associated design requirements.

3. NDE Personnel shall be qualified to American Society of Nondestructive Testing (ASNT) SNT-TC-1A.

B. Shop Acceptance Tests: Perform inspection and testing of the completed storage tanks in accordance with the requirements of API Standard 650, API Standard 620, as applicable. The term "Inspector", as used in the API Standards, refers to the LANL Inspector. Provide the test location, equipment, instrumentation of certified accuracy, and any supplementary temporary connections and auxiliary parts necessary to fully execute the tests. Provide test personnel qualified to conduct, record, and verify test results. Provide LANL with a minimum seven (7) working day advance written notice of shop acceptance tests. Submit the test results as part of the Quality Assurance Document Package in accordance with Exhibit I.

C. Weld Inspection

1. Minimum radiography: Refer to API Standard 650 and API Standard 620, as applicable, for details of requirements.

2. Magnetic particle and liquid penetrant examination: If specified, perform magnetic particle examination in accordance with requirements in API Standard 650 and API Standard 620, as applicable. Liquid penetrant inspection may be substituted for non-magnetic material or if approval is obtained from LANL. Perform liquid penetrant testing after any grinding and polishing operations. Repair and re-test detected defects.

D. Pressure Test:

1. Test tanks designed for a maximum of 15 psig internal pressure to the requirements of API Standard 620, as applicable.

2. Test API Standard 650 tanks designed for small internal pressures (2-1/2 psig max) per API Standard 650 (Appendix F, Paragraph F.4)

3. Test API Standard 650 tanks designed for atmospheric pressure operation by filling with water to hydrostatic test level without tank pressurization, per API Standard 650, as applicable.

4. Vent tank to atmosphere while filling or draining tank. Weld surfaces are to be free of coating materials during test. Water for shop-testing austenitic stainless steel tanks is to be potable quality with a chloride ion content of less than 50 ppm. After testing, drain water from tank. Wipe standing water dry—do not allow it to evaporate to dryness, unless de-ionized water is used.

E. Test Reports: Provide test reports as required by API Standard 650 and API Standard 620, as applicable, the Subcontract documents, and this specification. Include the following information in the test report:

1. Storage tank identification,

2. Date of test.
3. Name and signature of the certified test operator.
4. Location and description of indications.
5. Description of repairs and retest, and
6. Signature of witness.

F. Nameplates and Labeling:

1. Attach a Manufacturer's Certification Nameplate to the storage tank in accordance with the requirements of API Standard 650 (Section 8, "Marking") or API Standard 620 (Section 6, "Marking"), as applicable.

2. Attach a nameplate to each pressure storage tank for LANL identification. This information may be incorporated into a single nameplate with the API requirements, if desired. Clearly separate the API information from the LANL information.

3. Nameplate may be attached to the tank by welding, brazing, or soldering and in such a manner so as not to weaken storage tank strength or alter tank material properties. Nameplate cannot be removed without destruction of the nameplate.

4. Nameplate is to be austenitic stainless steel and the attachment bracket shall have sufficient projection to clear storage tank insulation, when present.

PART 3 EXECUTION

3.1 INSTALLATION

A. Install storage tanks in accordance with the requirements of API Standard 650 and API Standard 620, as applicable.

B. Unload with equipment having sufficient lifting capacity to avoid damage to the storage tanks.

C. No modifications shall be made to any equipment without prior written approval from the Buyer. This includes any welding, additional penetrations in any structure, or repairing damage which might affect the integrity of the equipment.

3.2 TESTING

A. Factory Acceptance Testing (FAT):

1. Before performing the FAT, a FAT procedure shall be submitted to the Subcontractor Technical Representative for review.

2. The results of the FAT shall be documented and submitted to the Subcontractor Technical Representative.

3. The Seller shall provide qualified Inspectors per ASNT SNT-TC-1A for all NDE inspections and for functional tests in this section.

3.3 SCHEDULES

A. To be provided by Subcontractor upon award.

Storage Tank Data Sheet and Sketch

AECOM	DS-001, LLW Influent Tank (Reaction Tank #1)				Specification No. 43 4116	
	Rev.	By	Date	Comment	Sheet	Date
	~~	~~~	~~~	~~~	1 of 2	~~~
					Checked By	Approved By
					~~	~~~
					Purchase Order:	
Project RLWTF-UP					Requisition No.:	

Tag No.	TK-1101

PFD #	C55864, Sheet D-6000	Stream No.	9, 13, 16, 31 & 35 (Inlet); 11 (Outlet)
P&ID #	C55864, Sheet D-6012	Quality Assurance Level	General Service

Operating Data			Rev.
Service		Storage	~~~
Fluid		LLW	~~~
Fluid Spg.		1.01	~~~
pH Range		4 - 12	~~~
Normal Pressure	(psia)	11.3	~~~
Pressure Range	(psia)	11.1-11.5	~~~
Normal Temperature	(deg F)	75	~~~
Temperature Range	(deg F)	50-85	~~~
Ambient Temperature Range	(deg F)	50-85	~~~
Design Data (See Note 3)			
Type of Head (or Top)		Flat	~~~
Type of Head (or Bottom)		Conical	~~~
Jacket? If so, state function (cooling or heating)		N/A	~~~
Jacket Temperature Limit (if used)		N/A	~~~
Physical Size - Fluid Volume	(gal)	1,000	~~~
- Diameter	(in)	66	~~~
- Height	(in)	127	~~~
Design Pressure (Min/Max)	(psig)	-2.5/2.5	~~~
Design Temperature	(deg F)	125	~~~
Corrosion Allowance		TBD	~~~
Other Loads		See Note 1	~~~
Fabrication & Inspection Data			
Additional Radiography		N/A	~~~
Impact Values		N/A	~~~
Weld Hardness		N/A	~~~
Other N.D.T.		N/A	~~~
Stress Relief		N/A	~~~
Weld Finish		N/A	~~~
Code Certification Required		Yes	~~~
Weights			
Empty	(lbs) *		~~~
Internals	(lbs) *		~~~
Insulation	(lbs)	N/A	~~~
Total Flooded Weight	(lbs) *		~~~
Shipping	(lbs) *		~~~
During Hydrotest	(lbs) *		~~~
Fluid Contents	(lbs) *		~~~
Lining	(lbs) *		~~~

Material Specifications				Rev.
	Design	Grade	Description	
Design Code	API-650	Atmospheric Tank		~~~
Shell	ASTM A240		304L SST	~~~
Head/Top/Bot.	ASTM A240		304L SST	~~~
Internals	ASTM A240/A312	TP	304L SST	~~~
Bolts	ASTM A320	B8M	300 Series SST	~~~
Nuts	ASTM A194	8M	300 Series SST	~~~
Reinf. Pads	ASTM A240		304L SST	~~~
Supports	ASTM A240/A276/A479		304L SST	~~~
Cladding/Lining	*		*	~~~
Wear Plates	ASTM A240		304L SST	~~~
Clips	ASTM A240		304L SST	~~~
Jacketing	N/A			~~~

Finish (Applicable Stds./Specs.)		
Internal Finish *		~~~
External Finish *		~~~

Mixer (See Note 2)			
Vendor/Model		See Note 4	~~~
Tank Turnover	(per hr) *		~~~
Impeller Dia.	(in) *	11.2	~~~
RPM	(rpm) *		~~~
Drive Motor	(hp/Vac/ph)	1/2 / 120 / 1	~~~
Shaft & Impeller Material		316 SST	~~~

Manufacturers Data			
Manufacturer *			~~~
Model Number *			~~~
Vendor - Name			~~~
- Address			~~~
- Location			~~~
- Phone			~~~
- Fax			~~~
Registration Number *			~~~
Allowable Stress	(psi) *		~~~
Shell Thickness	(in) *		~~~
Head Thickness	(in) *		~~~

Comments/Notes:

1. Refer to Section 13 4800 for seismic criteria.
2. Tank mixer sizing to be verified by Vendor.
3. Tank physical sizes listed are nominal. Refer to 60239831-MCAL-023, *RLWTF LLW Process Equipment Weights and Sizes*, for physical size details.
4. Tank mixer shall be SPX Industrial Processes model Mi5S1-1 11.2H, or equivalent based on performance characteristics.
5. Vendor to supply adapter plate for installation of mixer on 12" ANSI flange.

*Vendor to provide/verify this information

AECOM	DS-001, LLW Influent Tank (Reaction Tank #1)				Specification No. 43 4116	
	Rev.	By	Date	Comment	Sheet	Date
	~~	~~~	~~~	~~~	2 of 2	~~~
					Checked By	Approved By
					~~	~~~
					Purchase Order:	
Project RLWTF-UP					Requisition No.:	

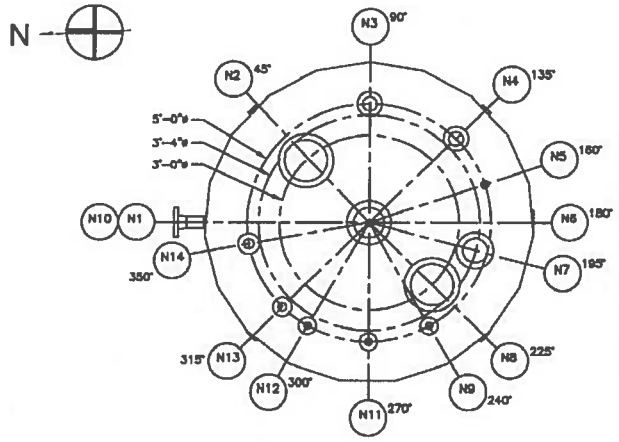

NOZZLE SCHEDULE		
NOZZLE	CONNECTION	SERVICE
N1	12" FLG. 150#	MIXER
N2	6" FLG. 150#	INSPECTION PORT
N3	1-1/2" FLG. 150#	LLW-096 INLET
N4	1-1/2" FLG. 150#	LLW-095 INLET
N5	3/8" SWAGELOCK	NAOH INJECTION
N6	1-1/2" FLG. 150#	LLW-314 CONNECTION
N7	3" FLG. 150#	PH ELEMENT
N8	6" FLG. 150#	LEVEL ELEMENT
N9	1/2" FLG. 150#	LLW-079 INLET
N10	2" FLG. 150#	OVERFLOW
N11	1/2" FLG. 150#	LLW-099 INLET
N12	1/2" FLG. 150#	LLW-088 INLET
N13	3/4" FLG. 150#	LLW-094 INLET
N14	2" FLG. 150#	VENT
N15	1" FLG. 150#	NPWC-103

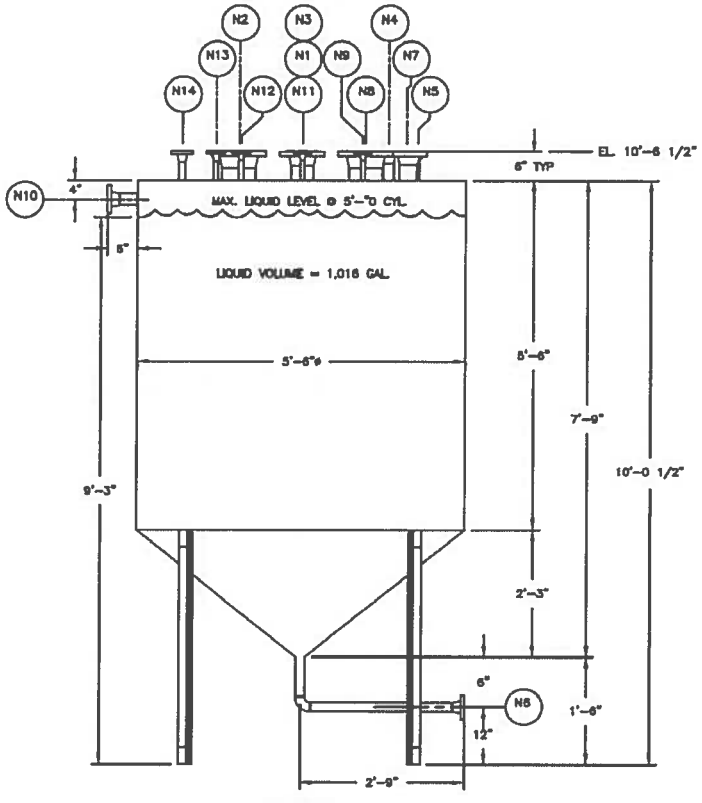

TK-1101

AECOM

DS-002, LLW RO pH Adjustment Tank				Specification No. 43 4116	
Rev.	By	Date	Comment	Sheet	Date
~~	~~~	~~~	~~~	1 of 2	~~~
				Checked By	Approved By
				~~	~~~
				Purchase Order:	
				Requisition No.:	

Project	RLWTF-UP

Tag No.	TK-1301

PFD #	C55864, Sheet D-6000	Stream No.	23 & 34 (Inlet); 26 (Outlet)
P&ID #	C55864, Sheet D-6016	Quality Assurance Level	General Service

Operating Data			Rev.
Service		Storage	~~~
Fluid		LLW	~~~
Fluid Spg.		1.00	~~~
pH Range		4 - 12	~~~
Normal Pressure	(psia)	11.3	~~~
Pressure Range	(psia)	11.1-11.5	~~~
Normal Temperature	(deg F)	75	~~~
Temperature Range	(deg F)	50-85	~~~
Ambient Temperature Range	(deg F)	50-85	~~~
Design Data (See Note 3)			
Type of Head (or Top)		Flat	~~~
Type of Head (or Bottom)		Sloped	~~~
Jacket? If so, state function (cooling or heating)		N/A	~~~
Jacket Temperature Limit (if used)		N/A	~~~
Physical Size - Fluid Volume	(gal)	1,200	~~~
- Diameter	(in)	72	~~~
- Height	(in)	84	~~~
Design Pressure (Min/Max)	(psig)	-2.5/2.5	~~~
Design Temperature	(deg F)	125	~~~
Corrosion Allowance		TBD	~~~
Other Loads		See Note 1	~~~
Fabrication & Inspection Data			
Additional Radiography		N/A	~~~
Impact Values		N/A	~~~
Weld Hardness		N/A	~~~
Other N.D.T.		N/A	~~~
Stress Relief		N/A	~~~
Weld Finish		N/A	~~~
Code Certification Required		Yes	~~~
Weights			
Empty	(lbs) *		~~~
Internals	(lbs) *		~~~
Insulation	(lbs)	N/A	~~~
Total Flooded Weight	(lbs) *		~~~
Shipping	(lbs) *		~~~
During Hydrotest	(lbs) *		~~~
Fluid Contents	(lbs) *		~~~
Lining	(lbs) *		~~~

Material Specifications				Rev.
	Design	Grade	Description	
Design Code	API-650	Atmospheric Tank		~~~
Shell	ASTM A240		304L SST	~~~
Head/Top/Bot	ASTM A240		304L SST	~~~
Internals	ASTM A240/A312	TP	304L SST	~~~
Bolts	ASTM A320	B8M	300 Series SST	~~~
Nuts	ASTM A194	8M	300 Series SST	~~~
Reinf. Pads	ASTM A240		304L SST	~~~
Supports	ASTM A240/A276/A479		304L SST	~~~
Cladding/Lining	*		*	~~~
Wear Plates	ASTM A240		304L SST	~~~
Clips	ASTM A240		304L SST	~~~
Jacketing	N/A			~~~

Finish (Applicable Stds./Specs.)			
Internal Finish	*		~~~
External Finish	*		~~~

Mixer (See Note 2)			
Vendor		See Note 4	~~~
Tank Turnover	(per hr) *		~~~
Impeller Dia.	(in) *	11.2	~~~
RPM	(rpm) *		~~~
Drive Motor	(hp/Vac/ph)	1/2 / 120 / 1	~~~
Shaft & Impeller Material		316 SST	~~~

Manufacturers Data			
Manufacturer	*		~~~
Model Number	*		~~~
Vendor - Name			~~~
- Address			~~~
- Location			~~~
- Phone			~~~
- Fax			~~~

Registration Number	*		~~~
Allowable Stress	(psi) *		~~~
Shell Thickness	(in) *		~~~
Head Thickness	(in) *		~~~

Comments/Notes:

1. Refer to Section 13 4800 for seismic criteria.
2. Tank mixer sizing to be verified by Vendor.
3. Tank physical sizes listed are nominal. Refer to 60239831-MCAL-023, *RLWTF LLW Process Equipment Weights and Sizes*, for physical size details.
4. Tank mixer shall be SPX Industrial Processes model Mi5S1-1 11.2H, or equivalent based on performance characteristics.
5. Vendor to supply adapter plate for installation of mixer on 12" ANSI flange.

*Vendor to provide/verify this information

AECOM	DS-002, LLW RO pH Adjustment Tank				Specification No. 43 4116	
	Rev.	By	Date	Comment	Sheet	Date
	~~	~~~	~~~	~~~	2 of 2	~~~
					Checked By	Approved By
					~~	~~~
					Purchase Order:	
Project RLWTF-UP					Requisition No.:	

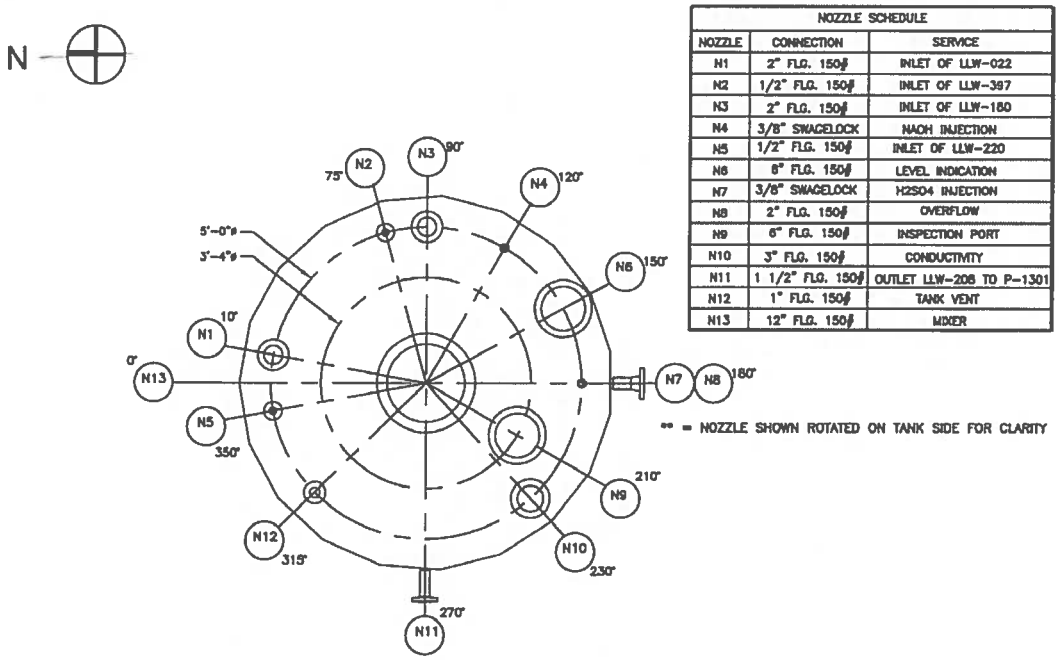

NOZZLE SCHEDULE		
NOZZLE	CONNECTION	SERVICE
N1	2" FLG. 150#	INLET OF LLW-022
N2	1/2" FLG. 150#	INLET OF LLW-397
N3	2" FLG. 150#	INLET OF LLW-180
N4	3/8" SWAGELOCK	NAOH INJECTION
N5	1/2" FLG. 150#	INLET OF LLW-220
N6	6" FLG. 150#	LEVEL INDICATION
N7	3/8" SWAGELOCK	H2SO4 INJECTION
N8	2" FLG. 150#	OVERFLOW
N9	6" FLG. 150#	INSPECTION PORT
N10	3" FLG. 150#	CONDUCTIVITY
N11	1 1/2" FLG. 150#	OUTLET LLW-208 TO P-1301
N12	1" FLG. 150#	TANK VENT
N13	12" FLG. 150#	MIXER

** = NOZZLE SHOWN ROTATED ON TANK SIDE FOR CLARITY

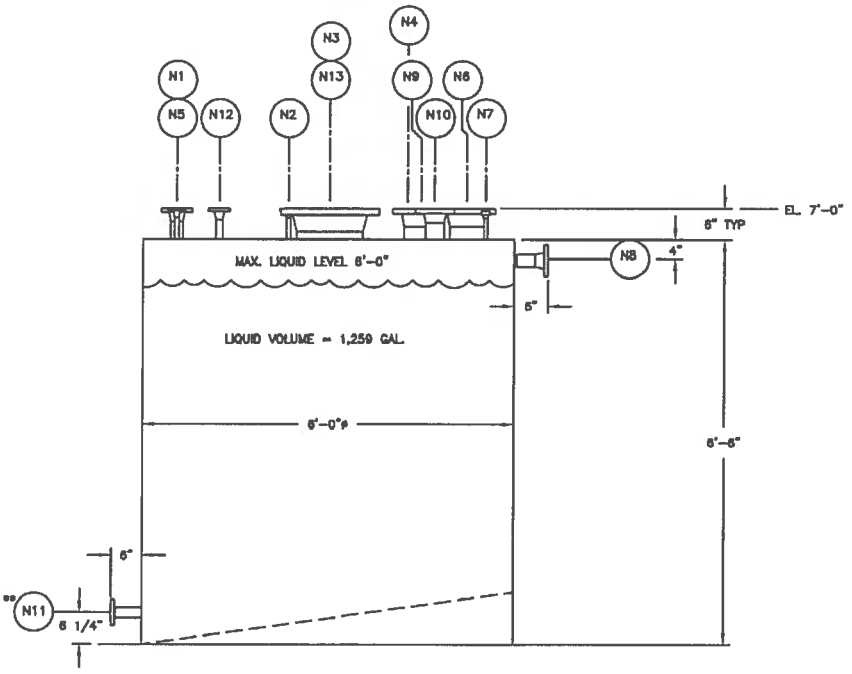

TK-1301

AECOM

DS-003, LLW RO Permeate Holding Tank				Specification No.	
				43 4116	
Rev.	By	Date	Comment	Sheet	Date
~~	~~~	~~~	~~~	1 of 2	~~~
				Checked By	Approved By
				~~	~~~
				Purchase Order:	
				Requisition No.:	

Project	RLWTF-UP						
Tag No.	TK-1304						

PFD #	C55864, Sheet D-6000	Stream No.	39
P&ID #	C55864, Sheet D-6020	Quality Assurance Level	General Service

Operating Data			Rev.
Service		Storage	~~~
Fluid		LLW	~~~
Fluid Spg.		1.00	~~~
pH Range		4 - 12	~~~
Normal Pressure	(psia)	11.3	~~~
Pressure Range	(psia)	11.1-11.5	~~~
Normal Temperature	(deg F)	75	~~~
Temperature Range	(deg F)	50-85	~~~
Ambient Temperature Range	(deg F)	50-85	~~~
Design Data (See Note 3)			
Type of Head (or Top)		Flat	~~~
Type of Head (or Bottom)		Sloped	~~~
Jacket? If so, state function (cooling or heating)		N/A	~~~
Jacket Temperature Limit (if used)		N/A	~~~
Physical Size - Fluid Volume	(gal)	800	~~~
- Diameter	(in)	66	~~~
- Height	(in)	66	~~~
Design Pressure (Min/Max)	(psig)	-2.5/2.5	~~~
Design Temperature	(deg F)	125	~~~
Corrosion Allowance		TBD	~~~
Other Loads		See Note 1	~~~
Fabrication & Inspection Data			
Additional Radiography		N/A	~~~
Impact Values		N/A	~~~
Weld Hardness		N/A	~~~
Other N.D.T.		N/A	~~~
Stress Relief		N/A	~~~
Weld Finish		N/A	~~~
Code Certification Required		Yes	~~~
Weights			
Empty	(lbs) *		~~~
Internals	(lbs) *		~~~
Insulation	(lbs)	N/A	~~~
Total Flooded Weight	(lbs) *		~~~
Shipping	(lbs) *		~~~
During Hydrotest	(lbs) *		~~~
Fluid Contents	(lbs) *		~~~
Lining	(lbs) *		~~~

Material Specifications				Rev.
	Design	Grade	Description	
Design Code	API-650	Atmospheric Tank		~~~
Shell	ASTM A240		304L SST	~~~
Head/Top/Bot.	ASTM A240		304L SST	~~~
Internals	ASTM A240/A312	TP	304L SST	~~~
Bolts	ASTM A320	B8M	300 Series SST	~~~
Nuts	ASTM A194	8M	300 Series SST	~~~
Reinf. Pads	ASTM A240		304L SST	~~~
Supports	ASTM A240/A276/A479		304L SST	~~~
Cladding/Lining	*		*	~~~
Wear Plates	ASTM A240		304L SST	~~~
Clips	ASTM A240		304L SST	~~~
Jacketing	N/A			~~~

Finish (Applicable Stds./Specs.)		
Internal Finish *		~~~
External Finish *		~~~
Eductor (See Note 2)		
Size (IPS) *		~~~
Tank Turnover (per hr)	10	~~~
Flowrate gpm *		~~~
Entrainment Ratio (min)	4-5	~~~
Material	316 SS	~~~
		~~

Manufacturers Data		
Manufacturer *		~~~
Model Number *		~~~
Vendor - Name		~~~
- Address		~~~
- Location		~~~
- Phone		~~~
- Fax		~~~
Registration Number *		~~~
Allowable Stress (psi) *		~~~
Shell Thickness (in) *		~~~
Head Thickness (in) *		~~~

Comments/Notes:

1. Refer to Section 13 4800 for seismic criteria.
2. Tank Eductor sizing to be provided by Vendor.
3. Tank physical sizes listed are nominal. Refer to 60239831-MCAL-023, *RLWTF LLW Process Equipment Weights and Sizes*, for physical size details.

*Vendor to provide/verify this information

AECOM	DS-003, LLW RO Permeate Holding Tank				Specification No. 43 4116	
	Rev.	By	Date	Comment	Sheet	Date
	~~	~~~	~~~	~~~	2 of 2	~~~
					Checked By	Approved By
					~~	~~~
					Purchase Order:	
Project RLWTF-UP					Requisition No.:	

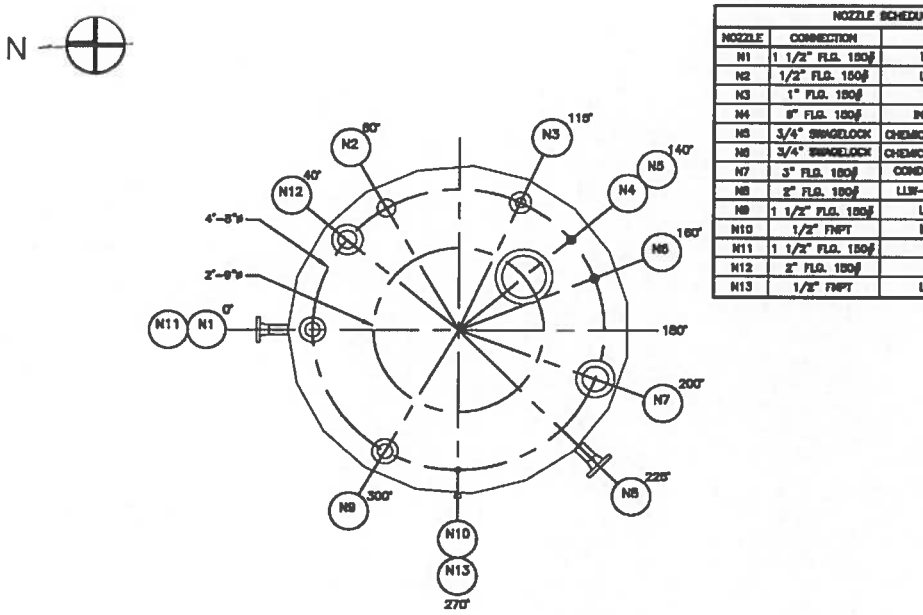

NOZZLE SCHEDULE		
NOZZLE	CONNECTION	SERVICE
N1	1 1/2" FLG. 150#	LLW-345 INLET
N2	1/2" FLG. 150#	LLW-269 INLET
N3	1" FLG. 150#	TANK VENT
N4	8" FLG. 150#	INSPECTION PORT
N5	3/4" SWAGELOCK	CHEMICAL INJECTION CS-281
N6	3/4" SWAGELOCK	CHEMICAL INJECTION CS-289
N7	3" FLG. 150#	CONDUCTIVITY ELEMENT
N8	2" FLG. 150#	LLW-180 TO P-1304
N9	1 1/2" FLG. 150#	LLW-448 INLET
N10	1/2" FNPT	LEVEL ELEMENT
N11	1 1/2" FLG. 150#	OVERFLOW
N12	2" FLG. 150#	NPWD-104
N13	1/2" FNPT	LEVEL ELEMENT

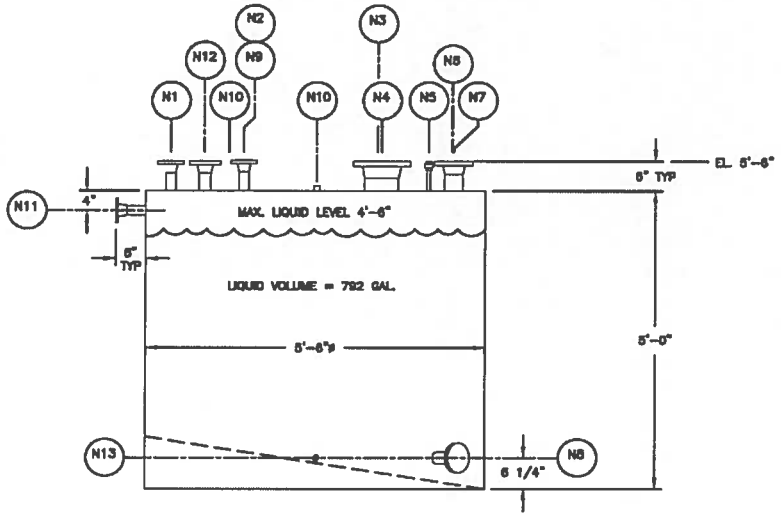

TK-1304

AECOM

DS-004, LLW Effluent Tanks				Specification No.	
				43 4116	
Rev.	By	Date	Comment	Sheet	Date
~~	~~~	~~~	~~~	1 of 3	~~~
				Checked By	Approved By
				~~	~~~
				Purchase Order:	
				Requisition No.:	

Project	RLWTF-UP

Tag No.	TK-1501	TK-1502

PFD #	C55864, Sheet D-6000	Stream No.	39 & 42 (Inlet), 45 (Outlet)
P&ID #	C55867, Sheet D-6410 & D-6411	Quality Assurance Level	General Service

Operating Data			Rev.
Service		Storage	~~~
Fluid		Water	~~~
Fluid Spg.		1.00	~~~
pH Range		4 - 12	~~~
Normal Pressure	(psia)	11.1	~~~
Pressure Range	(psia)	11.1-11.5	~~~
Normal Temperature	(deg F)	N/A	~~~
Temperature Range	(deg F)	5-89	~~~
Ambient Temperature Range	(deg F)	5-89	~~~
Design Data (See Note 4)			
Type of Heads		Flat	~~~
Orientation		Horizontal	~~~
Jacket? If so, state function (cooling or heating)		N/A	~~~
Jacket Temperature Limit (if used)		N/A	~~~
Physical Size - Fluid Volume	(gal)	10,000	~~~
- Diameter	(in)	96	~~~
- Length	(in)	320	~~~
Design Pressure (Min/Max)	(psig)	-2.5/2.5	~~~
Design Temperature	(deg F)	125	~~~
Corrosion Allowance		TBD	~~~
Other Loads		See Note 1	~~~
Fabrication & Inspection Data			
Additional Radiography		N/A	~~~
Impact Values		N/A	~~~
Weld Hardness		N/A	~~~
Other N.D.T.		N/A	~~~
Stress Relief		N/A	~~~
Weld Finish		N/A	~~~
Code Certification Required		Yes	~~~
Weights			
Empty	(lbs) *		~~~
Internals	(lbs) *		~~~
Insulation	(lbs) *		~~~
Total Flooded Weight	(lbs) *		~~~
Shipping	(lbs) *		~~~
During Hydrotest	(lbs) *		~~~
Fluid Contents	(lbs) *		~~~
Lining	(lbs) *		~~~

Material Specifications	Design	Grade	Description	Rev.
Design Code	API-650	Atmospheric Tank		~~~
Shell	ASTM A36/A635/A1011		CS	~~~
Head/Side	ASTM A36/A635/A1011		CS	~~~
Internals	ASTM A36/A569		CS	~~~
Bolts	ASTM A193	B7		~~~
Nuts	ASTM A194	B7		~~~
Reinf. Pads	ASTM A36/A635/A1011		CS	~~~
Supports	ASTM A36/A635/A1011		CS	~~~
Wear Plates	ASTM A36/A635/A1011		CS	~~~
Clips	ASTM A36/A635/A1011		CS	~~~
Interior Coating	Per AWWA D102, ICS-1-W			~~~
Exterior Coating	Per AWWA D102, OCS-1-W			~~~
Jacketing	ASTM B209	See Section 22 0713		~~~
Insulation	ASTM C534, Type 1	See Section 22 0713		~~~

Eductor (See Note 3)			
Size	(IPS) *		~~~
Tank Turnover	(per hr)	10	~~~
Flowrate	gpm *		~~~
Entrainment Ratio	(min)	4-5	~~~
Material		316 SS	~~~

Heater		
Specification	See Note 2	~~~

Manufacturers Data			
Manufacturer	*		~~~
Model Number	*		~~~
Vendor - Name			~~~
- Address			~~~
- Location			~~~
- Phone			~~~
- Fax			~~~
Registration Number	*		~~~
Allowable Stress	(psi) *		~~~
Shell Thickness	(in) *		~~~
Head Thickness	(in) *		~~~

Comments/Notes:

1. Refer to Section 13 4800 for environmental, wind, snow and seismic criteria.
2. Immersion Heater with overheat protection thermocouple
   - ~ 460V/3PH/5KW, 6.5W/in^2
   - ~ 3" Flange #150, Heating Elements
   - ~ 316 SS material
   - ~ UL Listed
   - ~ Process thermocouple in thermowell with separate thermocouple termination box.
   - ~ Equivalent to Chomalox TMS Immersion heater with electronic device options C45 and C35.
3. Tank Eductor sizing to be provided by Vendor.
4. Tank physical sizes listed are nominal. Refer to 60239831-MCAL-023, *RLWTF LLW Process Equipment Weights and Sizes*, for physical size details.

*Vendor to provide/verify this information,

AECOM	DS-004, LLW Effluent Tanks				Specification No. 43 4116	
	Rev.	By	Date	Comment	Sheet	Date
	~~	~~~	~~~	~~~	2 of 3	~~~
					Checked By	Approved By
					~~	~~~
					Purchase Order:	
Project RLWTF-UP					Requisition No.:	

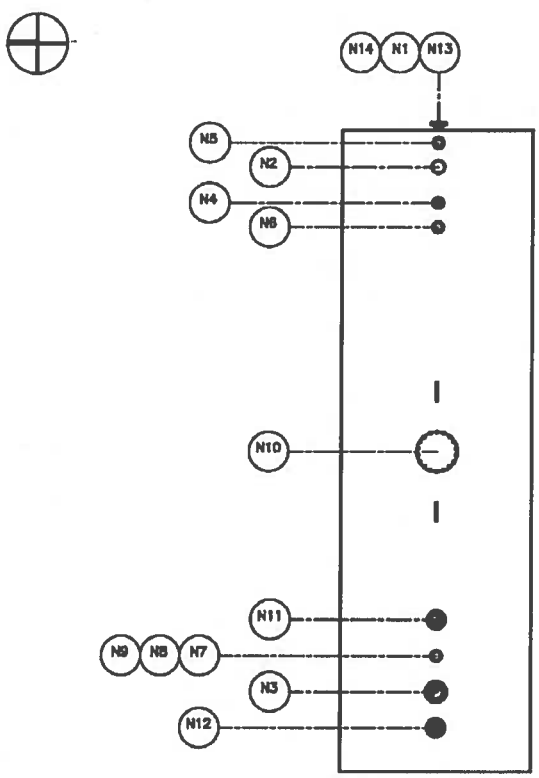

NOZZLE SCHEDULE		
NOZZLE	CONNECTION	SERVICE
N1	1/2" FNPT	LEVEL ELEMENT
N2	--	LEVEL ELEMENT
N3	6" FLG. 150#	LLW-303 INLET
N4	4" FLG. 150#	SPARE
N5	3" FLG. 150#	PH ELEMENT
N6	4" FLG. 150#	TANK VENT
N7	TBD	TEMPERATURE ELEMENT
N8	TBD	HEATER
N9	TBD	TEMPERATURE ELEMENT
N10	18" FLG.	MANWAY
N11	4" FLG. 150#	SPARE
N12	4" FLG. 150#	LLW-292 INLET
N13	2" FLG. 150#	OVERFLOW
N14	3" FLG. 150#	LLW-291 CONNECTION

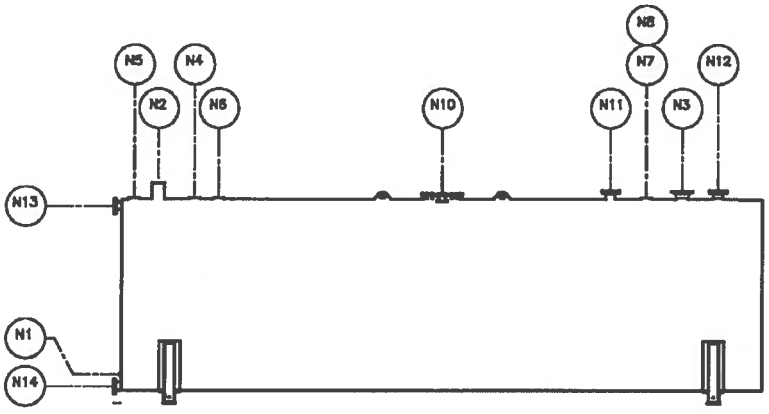

(STRUCTURAL ACCESS PLATFORMS NOT SHOWN FOR CLARITY)

TK-1501

AECOM	DS-004, LLW Effluent Tanks				Specification No. 43 4116	
	Rev.	By	Date	Comment	Sheet	Date
	~~	~~~	~~~	~~~	3 of 3	~~~
					Checked By	Approved By
					~~	~~~
					Purchase Order:	
Project RLWTF-UP					Requisition No.:	

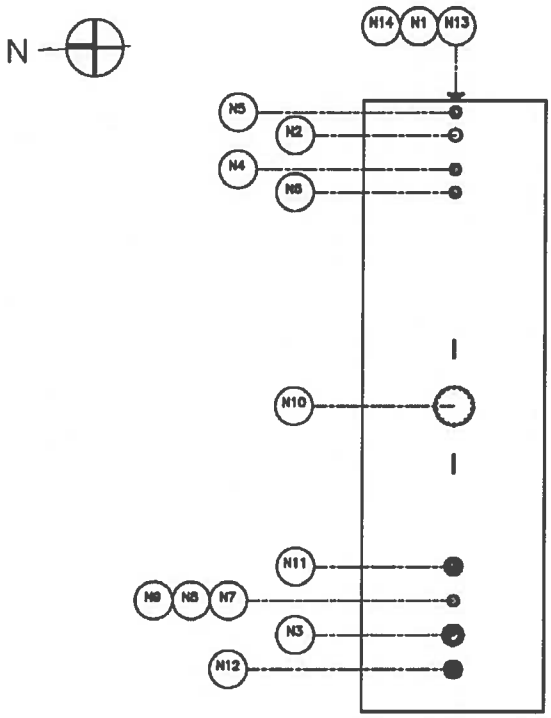

NOZZLE SCHEDULE		
NOZZLE	CONNECTION	SERVICE
N1	1/2" FNPT	LEVEL ELEMENT
N2	–	LEVEL ELEMENT
N3	6" FLG. 150#	LLW-307 INLET
N4	4" FLG. 150#	SPARE
N5	3" FLG. 150#	PH ELEMENT
N6	4" FLG. 150#	TANK VENT
N7	TBD	TEMPERATURE ELEMENT
N8	TBD	HEATER
N9	TBD	TEMPERATURE ELEMENT
N10	18" FLG.	MANWAY
N11	4" FLG. 150#	SPARE
N12	4" FLG. 150#	LLW-293 INLET
N13	2" FLG. 150#	OVERFLOW
N14	3" FLG. 150#	LLW-281 CONNECTION

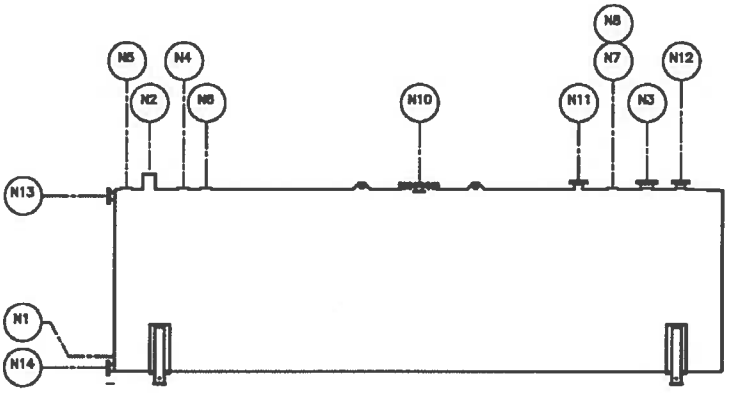

(STRUCTURAL ACCESS PLATFORMS NOT SHOWN FOR CLARITY)

TK-1502

AECOM

DS-005, LLW Sludge Thickening Tank				Specification No. 43 4116	
Rev.	By	Date	Comment	Sheet	Date
~~	~~~	~~~	~~~	1 of 2	~~~
				Checked By	Approved By
				~~	~~~
				Purchase Order:	
				Requisition No.:	

Project	RLWTF-UP		
Tag No.	TK-1702		
PFD #	C55864, Sheet D-6000	Stream No.	12 & 14 (Inlet), 13 & 15 (Outlet)
P&ID #	C55864, Sheet D-6025	Quality Assurance Level	General Service

Operating Data			Rev.
Service		Storage	~~~
Fluid		LLW	~~~
Fluid Spg.		1.10	~~~
pH Range		4 - 12	~~~
Normal Pressure	(psia)	11.3	~~~
Pressure Range	(psia)	11.1-11.5	~~~
Normal Temperature	(deg F)	75	~~~
Temperature Range	(deg F)	50-85	~~~
Ambient Temperature Range	(deg F)	50-85	~~~
Design Data (See Note 3)			
Type of Head (or Top)		Flat	~~~
Type of Head (or Bottom)		Conical	~~~
Jacket? If so, state function (cooling or heating)		N/A	~~~
Jacket Temperature Limit (if used)		N/A	~~~
Physical Size - Fluid Volume	(gal)	600	~~~
- Diameter	(in)	48	~~~
- Height	(in)	130	~~~
Design Pressure (Min/Max)	(psig)	-2.5/2.5	~~~
Design Temperature	(deg F)	125	~~~
Corrosion Allowance		TBD	~~~
Other Loads		See Note 1	~~~
Fabrication & Inspection Data			
Additional Radiography		N/A	~~~
Impact Values		N/A	~~~
Weld Hardness		N/A	~~~
Other N.D.T.		N/A	~~~
Stress Relief		N/A	~~~
Weld Finish		N/A	~~~
Code Certification Required		Yes	~~~
Weights			
Empty	(lbs) *		~~~
Internals	(lbs) *		~~~
Insulation	(lbs)	N/A	~~~
Total Flooded Weight	(lbs) *		~~~
Shipping	(lbs) *		~~~
During Hydrotest	(lbs) *		~~~
Fluid Contents	(lbs) *		~~~
Lining	(lbs) *		~~~

Material Specifications				Rev.
	Design	Grade	Description	
Design Code	API-650	Atmospheric Tank		~~~
Shell	ASTM A240		304L SST	~~~
Head/Top/Bot.	ASTM A240		304L SST	~~~
Internals	ASTM A240/A312	TP	304L SST	~~~
Bolts	ASTM A320	B8M	300 Series SST	~~~
Nuts	ASTM A194	8M	300 Series SST	~~~
Reinf. Pads	ASTM A240		304L SST	~~~
Supports	ASTM A240/A276/A479		304L SST	~~~
Cladding/Lining	*		*	~~~
Wear Plates	ASTM A240		304L SST	~~~
Clips	ASTM A240		304L SST	~~~
Jacketing	N/A			~~~

Finish (Applicable Stds./Specs.)		
Internal Finish *		~~~
External Finish *		~~~

Mixer (See Note 2)		
Vendor	See Note 4	~~~
Tank Turnover (per hr) *		~~~
Impeller Dia. (in) *	11.2	~~~
RPM (rpm) *		~~~
Drive Motor (hp/Vac/ph)	1/2 / 120 / 1	~~~
Shaft & Impeller Material	316 SST	~~~

Manufacturers Data		
Manufacturer *		~~~
Model Number *		~~~
Vendor - Name		~~~
- Address		~~~
- Location		~~~
- Phone		~~~
- Fax		~~~
Registration Number *		~~~
Allowable Stress (psi) *		~~~
Shell Thickness (in) *		~~~
Head Thickness (in) *		~~~

Comments/Notes:

1. Refer to Section 13 4800 for seismic criteria.
2. Tank mixer sizing to be verified by Vendor.
3. Tank physical sizes listed are nominal. Refer to 60239831-MCAL-023, *RLWTF LLW Process Equipment Weights and Sizes*, for physical size details.
4. Tank mixer shall be SPX Industrial Processes model Mi5S1-1 11.2H, or equivalent based on performance characteristics.
5. Vendor to supply adapter plate for installation of mixer on 12" ANSI flange.

*Vendor to provide/verify this information

AECOM	DS-005, LLW Sludge Thickening Tank				Specification No. 43 4116	
	Rev.	By	Date	Comment	Sheet	Date
	~~	~~~	~~~	~~~	2 of 2	~~~
					Checked By	Approved By
					~~	~~~
					Purchase Order:	
Project RLWTF-UP					Requisition No.:	

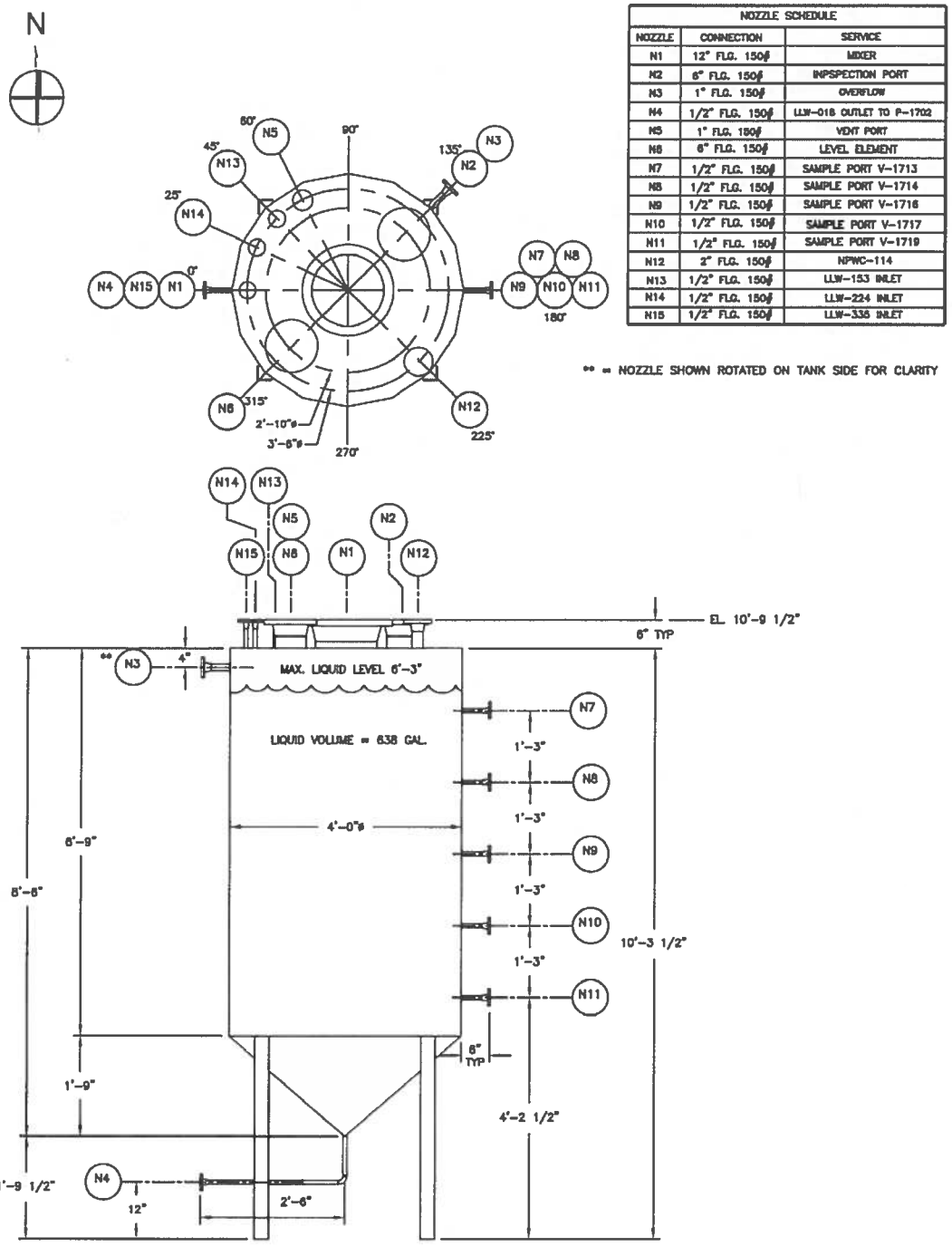

AECOM

DS-006, LLW Thickener Decant Holding Tank

Specification No. 43 4116

Rev.	By	Date	Comment	Sheet	Date
~~	~~~	~~~	~~~	1 of 2	~~~
				Checked By	Approved By
				~~	~~~
				Purchase Order:	
				Requisition No.:	

Project RLWTF-UP

Tag No. TK-1703

PFD # C55864, Sheet D-6000 **Stream No.** 13

P&ID # C55864, Sheet D-6027 **Quality Assurance Level** General Service

Operating Data			Rev.
Service		Storage	~~~
Fluid		LLW	~~~
Fluid Spg.		1.0	~~~
pH Range		4 - 12	~~~
Normal Pressure	(psia)	11.3	~~~
Pressure Range	(psia)	11.1-11.5	~~~
Normal Temperature	(deg F)	75	~~~
Temperature Range	(deg F)	50-85	~~~
Ambient Temperature Range	(deg F)	50-85	~~~
Design Data (See Note 4)			
Type of Heads		Flat	~~~
Orientation		Horizontal	~~~
Jacket? If so, state function (cooling or heating)		N/A	~~~
Jacket Temperature Limit (if used)		N/A	~~~
Physical Size - Fluid Volume	(gal)	200	~~~
- Diameter	(in)	36	~~~
- Length	(in)	72	~~~
Design Pressure (Min/Max)	(psig)	-2.5/2.5	~~~
Design Temperature	(deg F)	125	~~~
Corrosion Allowance		TBD	~~~
Other Loads		See Note 1	~~~
Fabrication & Inspection Data			
Additional Radiography		N/A	~~~
Impact Values		N/A	~~~
Weld Hardness		N/A	~~~
Other N.D.T.		N/A	~~~
Stress Relief		N/A	~~~
Weld Finish		N/A	~~~
Code Certification Required		Yes	~~~
Weights			
Empty	(lbs) *		~~~
Internals	(lbs) *		~~~
Insulation	(lbs)	N/A	~~~
Total Flooded Weight	(lbs) *		~~~
Shipping	(lbs) *		~~~
During Hydrotest	(lbs) *		~~~
Fluid Contents	(lbs) *		~~~
Lining	(lbs) *		~~~

Material Specifications	Design	Grade	Description	Rev.
Design Code	API-650	Atmospheric Tank		~~~
Shell	ASTM A240		304L SST	~~~
Head/Top/Bot.	ASTM A240		304L SST	~~~
Internals	ASTM A240/A312	TP	304L SST	~~~
Bolts	ASTM A320	B8M	300 Series SST	~~~
Nuts	ASTM A194	8M	300 Series SST	~~~
Reinf. Pads	ASTM A240		304L SST	~~~
Supports	ASTM A240/A276/A479		304L SST	~~~
Cladding/Lining	*		*	~~~
Wear Plates	ASTM A240		304L SST	~~~
Clips	ASTM A240		304L SST	~~~
Jacketing	N/A			~~~

Finish (Applicable Stds./Specs.)		
Internal Finish *		~~~
External Finish *		~~~

Eductor (See Note 3)			
Size	(IPS) *		~~~
Tank Turnover	(per hr)	10	~~~
Flowrate	gpm *		~~~
Entrainment Ratio	(min)	4-5	~~~
Material		316 SS	~~~

Manufacturers Data			
Manufacturer *			~~~
Model Number *			~~~
Vendor - Name			~~~
- Address			~~~
- Location			~~~
- Phone			~~~
- Fax			~~~
Registration Number *			~~~
Allowable Stress	(psi) *		~~~
Shell Thickness	(in) *		~~~
Head Thickness	(in) *		~~~

Comments/Notes:

1. Refer to Section 13 4800 for seismic criteria.
2. Tank shall be installed as low as possible with uneven saddles to impart a slope to the tank. Tank TK-1702 drains by gravity into Tank TK-1703.
3. Tank Eductor sizing to be provided by Vendor.
4. Tank physical sizes listed are nominal. Refer to 60239831-MCAL-023, *RLWTF LLW Process Equipment Weights and Sizes*, for physical size details.

*Vendor to provide/verify this information

AECOM	DS-006, LLW Thickener Decant Holding Tank				Specification No. 43 4116	
	Rev.	By	Date	Comment	Sheet	Date
	~~	~~~	~~~	~~~	2 of 2	~~~
					Checked By	Approved By
					~~	~~~
					Purchase Order:	
Project RLWTF-UP					Requisition No.:	

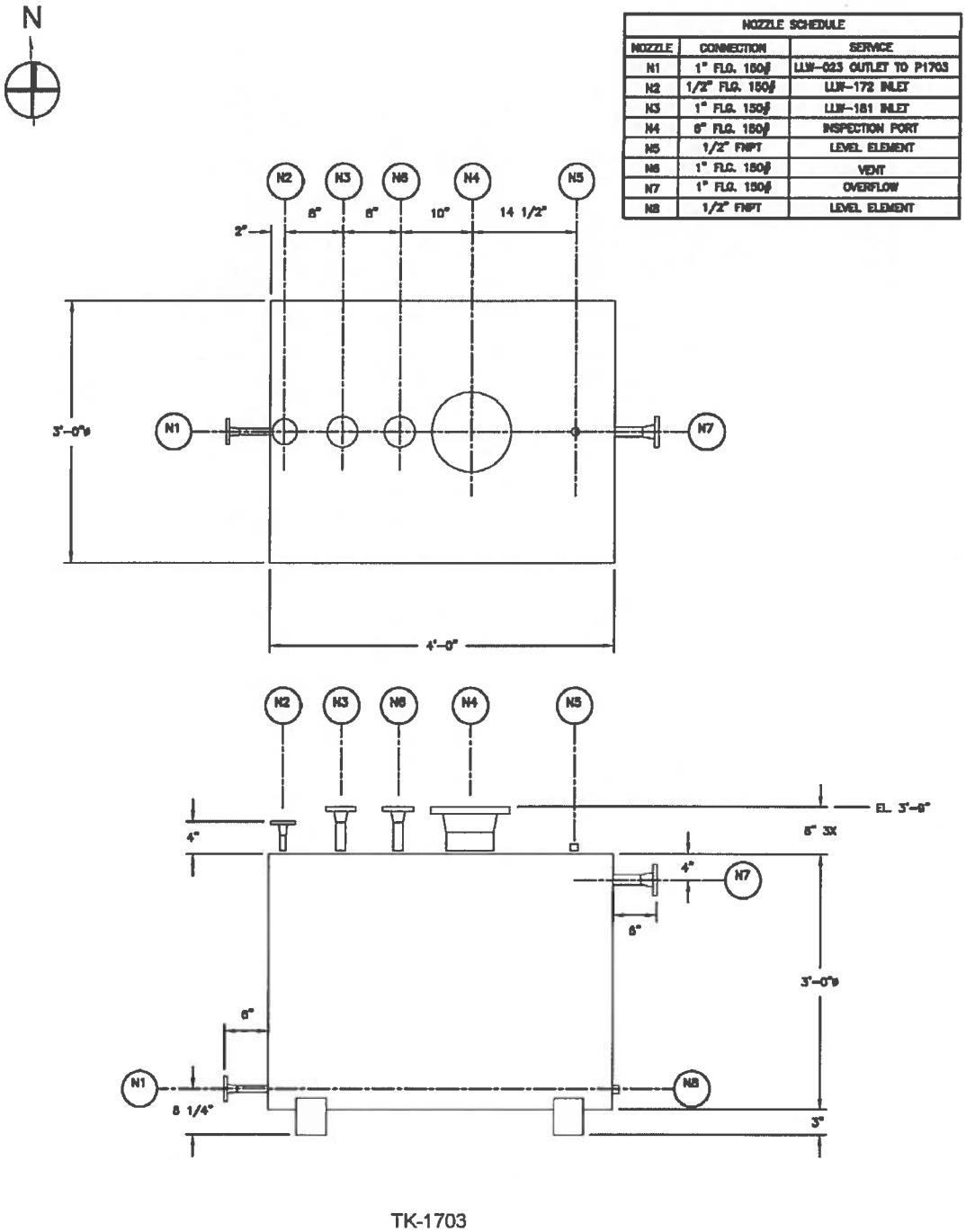

NOZZLE SCHEDULE		
NOZZLE	CONNECTION	SERVICE
N1	1" FLG. 150#	LLW-023 OUTLET TO P1703
N2	1/2" FLG. 150#	LLW-172 INLET
N3	1" FLG. 150#	LLW-181 INLET
N4	6" FLG. 150#	INSPECTION PORT
N5	1/2" FNPT	LEVEL ELEMENT
N6	1" FLG. 150#	VENT
N7	1" FLG. 150#	OVERFLOW
N8	1/2" FNPT	LEVEL ELEMENT

TK-1703

AECOM

DS-007, Filter Aid Tank				Specification No.	
				43 4116	
Rev.	By	Date	Comment	Sheet	Date
~~	~~~	~~~	~~~	1 of 2	~~~
				Checked By	Approved By
				~~	~~~
				Purchase Order:	
				Requisition No.:	

Project	RLWTF-UP		
Tag No.	TK-1704		
PFD #	C55864, Sheet D-6000	Stream No.	14
P&ID #	C55864, Sheet D-6026	Quality Assurance Level	General Service

Operating Data			Rev.
Service		Filter Aid	~~~
Fluid		See Note 2	~~~
Fluid Spg.		1.17	~~~
pH		7.0	~~~
Normal Pressure	(psia)	11.3	~~~
Pressure Range	(psia)	11.1-11.5	~~~
Normal Temperature	(deg F)	75	~~~
Temperature Range	(deg F)	50-85	~~~
Ambient Temperature Range	(deg F)	50-85	~~~
Design Data (See Note 4)			
Type of Head (or Top)		Flat	~~~
Type of Head (or Bottom)		Conical	~~~
Jacket? If so, state function (cooling or heating)		N/A	~~~
Jacket Temperature Limit (if used)		N/A	~~~
Physical Size - Fluid Volume	(gal)	100	~~~
- Diameter	(in)	36	~~~
- Height	(in)	66	~~~
Design Pressure (Min/Max)	(psig)	-2.5/2.5	~~~
Design Temperature	(deg F)	125	~~~
Corrosion Allowance		TBD	~~~
Other Loads		See Note 1	~~~
Fabrication & Inspection Data			
Additional Radiography		N/A	~~~
Impact Values		N/A	~~~
Weld Hardness		N/A	~~~
Other N.D.T.		N/A	~~~
Stress Relief		N/A	~~~
Weld Finish		N/A	~~~
Code Certification Required		Yes	~~~
Weights			
Empty	(lbs) *		~~~
Internals	(lbs) *		~~~
Insulation	(lbs)	N/A	~~~
Total Flooded Weight	(lbs) *		~~~
Shipping	(lbs) *		~~~
During Hydrotest	(lbs) *		~~~
Fluid Contents	(lbs) *		~~~
Lining	(lbs) *		~~~

Material Specifications				Rev.
	Design	Grade	Description	
Design Code	API-650	Atmospheric Tank		~~~
Shell	ASTM A240		304L SST	~~~
Head/Top/Bot.	ASTM A240		304L SST	~~~
Internals	ASTM A240/A312	TP	304L SST	~~~
Bolts	ASTM A320	B8M	300 Series SST	~~~
Nuts	ASTM A194	8M	300 Series SST	~~~
Reinf. Pads	ASTM A240		304L SST	~~~
Supports	ASTM A240/A276/A479		304L SST	~~~
Cladding/Lining	*		*	~~~
Wear Plates	ASTM A240		304L SST	~~~
Clips	ASTM A240		304L SST	~~~
Jacketing	N/A			~~~

Finish (Applicable Stds./Specs.)			
Internal Finish *			~~~
External Finish *			~~~
Mixer (See Note 3)			
Vendor		See Note 5	~~~
Tank Turnover (per hr) *			~~~
Impeller Dia. (in) *		3.8	~~~
RPM (rpm) *			~~~
Drive Motor (hp/Vac/ph)		1/2 / 120 / 1	~~~
Shaft & Impeller Material		316 SST	~~~
Manufacturers Data			
Manufacturer *			~~~
Model Number *			~~~
Vendor - Name			~~~
- Address			~~~
- Location			~~~
- Phone			~~~
- Fax			~~~
Registration Number *			~~~
Allowable Stress (psi) *			~~~
Shell Thickness (in) *			~~~
Head Thickness (in) *			~~~

Comments/Notes:

1. Refer to Section 13 4800 for seismic criteria.
2. Fluid contents consists of 25 wt% Diatomaceous Earth in Water
3. Tank mixer sizing to be verified by Vendor.
4. Tank physical sizes listed are nominal. Refer to 60239831-MCAL-023, *RLWTF LLW Process Equipment Weights and Sizes*, for physical size details.
5. Tank mixer shall be SPX Industrial Processes model Mi1L1-1 3.8H, or equivalent based on performance characteristics.

*Vendor to provide/verify this information

AECOM	DS-007, Filter Aid Tank				Specification No. 43 4116	
	Rev.	By	Date	Comment	Sheet	Date
	~~	~~~	~~~	~~~	2 of 2	~~~
					Checked By	Approved By
					~~	~~~
					Purchase Order:	
Project RLWTF-UP					Requisition No.:	

N

NOZZLE SCHEDULE		
NOZZLE	CONNECTION	SERVICE
N1	4" FLG. 150#	MIXER
N2	1/2" FLG. 150#	LLW-115 TO P-1704
N3	2" FLG. 150#	LLW-205 INLET
N4	2" FLG. 150#	NPWC-120 INLET

PARTIALLY OPEN TANK WITH HINGED LID. FILTER AID ADDED THROUGH LIDDED TANK TOP.

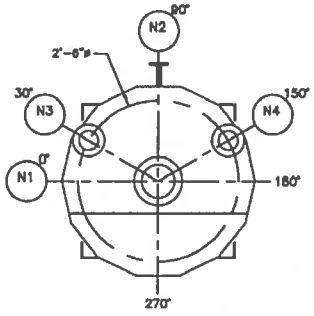

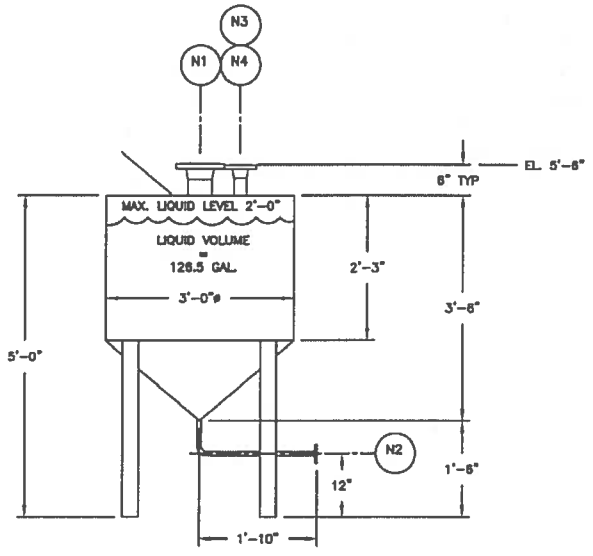

(TANK SHOWN FROM SOUTH ELEVATION FOR CLARITY)

TK-1704

AECOM

DS-008, Evaporator Supply Tank				Specification No.	
				43 4116	
Rev.	By	Date	Comment	Sheet	Date
~~	~~~	~~~	~~~	1 of 2	~~~
				Checked By	Approved By
				~~	~~~
				Purchase Order:	
				Requisition No.:	

Tag No.	TK-1705						

PFD #	C55864, Sheet D-6000	Stream No.	32
P&ID #	C55864, Sheet D-6028	Quality Assurance Level	General Service

Operating Data			Rev.
Service		Storage	~~~
Fluid		LLW	~~~
Fluid Spg.		1.01	~~~
pH Range		4 - 12	~~~
Normal Pressure	(psia)	11.3	~~~
Pressure Range	(psia)	11.1-11.5	~~~
Normal Temperature	(deg F)	75	~~~
Temperature Range	(deg F)	50-85	~~~
Ambient Temperature Range	(deg F)	50-85	~~~
Design Data (See Note 3)			
Type of Head (or Top)		Flat	~~~
Type of Head (or Bottom)		Sloped	~~~
Jacket? If so, state function (cooling or heating)		N/A	~~~
Jacket Temperature Limit (if used)		N/A	~~~
Physical Size - Fluid Volume	(gal)	1,000	~~~
- Diameter	(in)	66	~~~
- Height	(in)	84	~~~
Design Pressure (Min/Max)	(psig)	-2.5/2.5	~~~
Design Temperature	(deg F)	125	~~~
Corrosion Allowance		TBD	~~~
Other Loads		See Note 1	~~~
Fabrication & Inspection Data			
Additional Radiography		N/A	~~~
Impact Values		N/A	~~~
Weld Hardness		N/A	~~~
Other N.D.T.		N/A	~~~
Stress Relief		N/A	~~~
Weld Finish		N/A	~~~
Code Certification Required		Yes	~~~
Weights			
Empty	(lbs) *		~~~
Internals	(lbs) *		~~~
Insulation	(lbs)	N/A	~~~
Total Flooded Weight	(lbs) *		~~~
Shipping	(lbs) *		~~~
During Hydrotest	(lbs) *		~~~
Fluid Contents	(lbs) *		~~~
Lining	(lbs) *		~~~

Material Specifications				Rev.
	Design	Grade	Description	
Design Code	API-650	Atmospheric Tank		~~~
Shell	ASTM A240		304L SST	~~~
Head/Top/Bot	ASTM A240		304L SST	~~~
Internals	ASTM A240/A312	TP	304L SST	~~~
Bolts	ASTM A320	B8M	300 Series SST	~~~
Nuts	ASTM A194	8M	300 Series SST	~~~
Reinf. Pads	ASTM A240		304L SST	~~~
Supports	ASTM A240/A276/A479		304L SST	~~~
Cladding/Lining	*		*	~~~
Wear Plates	ASTM A240		304L SST	~~~
Clips	ASTM A240		304L SST	~~~
Jacketing	N/A			~~~
Finish (Applicable Stds./Specs.)				
Internal Finish *				~~~
External Finish *				~~~
Mixer (See Note 2)				
Vendor		See Note 4		~~~
Tank Turnover (per hr) *				~~~
Impeller Dia. (in) *		11.2		~~~
RPM (rpm) *				~~~
Drive Motor (hp/Vac/ph)		1/2 / 120 / 1		~~~
Shaft & Impeller Material		316 SST		~~~
Manufacturers Data				
Manufacturer *				~~~
Model Number *				~~~
Vendor - Name				~~~
- Address				~~~
- Location				~~~
- Phone				~~~
- Fax				~~~
Registration Number *				~~~
Allowable Stress (psi) *				~~~
Shell Thickness (in) *				~~~
Head Thickness (in) *				~~~

Comments/Notes:

1. Refer to Section 13 4800 for seismic criteria
2. Tank mixer sizing to be verified by Vendor.
3. Tank physical sizes listed are nominal. Refer to 60239831-MCAL-023, *RLWTF LLW Process Equipment Weights and Sizes*, for physical size details.
4. Tank mixer shall be SPX Industrial Processes model Mi5S1-1 11.2H, or equivalent based on performance characteristics.
5. Vendor to supply adapter plate for installation of mixer on 12" ANSI flange.

*Vendor to provide/verify this information

AECOM	DS-008, Evaporator Supply Tank				Specification No. 43 4116	
	Rev.	By	Date	Comment	Sheet	Date
	~~	~~~	~~~	~~~	2 of 2	~~~
					Checked By	Approved By
					~~	~~~
					Purchase Order:	
Project RLWTF-UP					Requisition No.:	

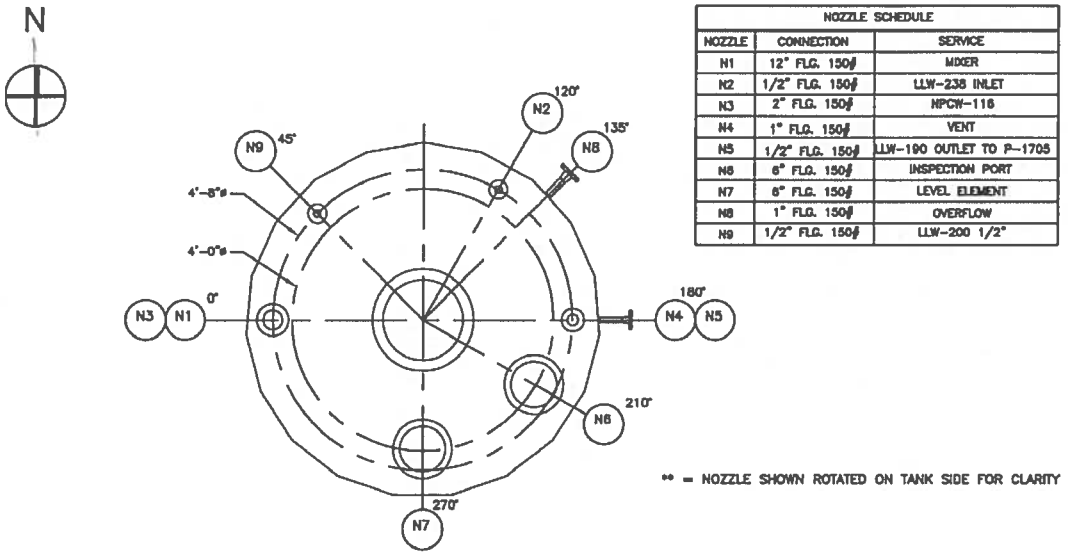

NOZZLE SCHEDULE		
NOZZLE	CONNECTION	SERVICE
N1	12" FLG. 150#	MIXER
N2	1/2" FLG. 150#	LLW-238 INLET
N3	2" FLG. 150#	NPCW-116
N4	1" FLG. 150#	VENT
N5	1/2" FLG. 150#	LLW-190 OUTLET TO P-1705
N6	6" FLG. 150#	INSPECTION PORT
N7	6" FLG. 150#	LEVEL ELEMENT
N8	1" FLG. 150#	OVERFLOW
N9	1/2" FLG. 150#	LLW-200 1/2"

** = NOZZLE SHOWN ROTATED ON TANK SIDE FOR CLARITY

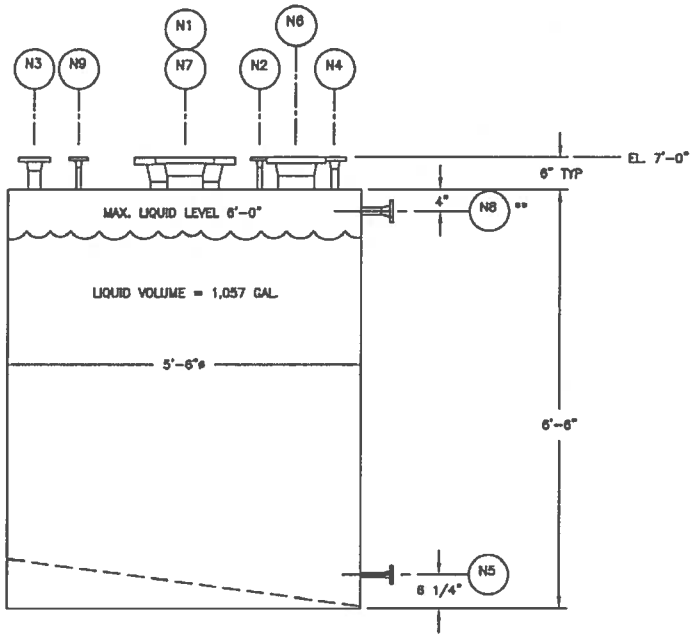

TK-1705

AECOM

DS-009, LLW Evaporator Condensate Tank				Specification No.	
				43 4116	
Rev.	By	Date	Comment	Sheet	Date
~~	~~~	~~~	~~~	1 of 2	~~~
				Checked By	Approved By
				~~	~~~
				Purchase Order:	
				Requisition No.:	

Project	RLWTF-UP						
Tag No.	TK-1706						
PFD #	C55864, Sheet D-6000		Stream No.	33			
P&ID #	C55864, Sheet D-6030		Quality Assurance Level		General Service		

Operating Data			Rev.
Service		Storage	~~~
Fluid		LLW	~~~
Fluid Spg.		1.00	~~~
pH Range		4 - 12	~~~
Normal Pressure	(psia)	11.3	~~~
Pressure Range	(psia)	11.1-11.5	~~~
Normal Temperature	(deg F)	75	~~~
Temperature Range	(deg F)	50-85	~~~
Ambient Temperature Range	(deg F)	50-85	~~~
Design Data (See Note 2)			
Type of Head (or Top)		Flat	~~~
Type of Head (or Bottom)		Sloped	~~~
Jacket? If so, state function (cooling or heating)		N/A	~~~
Jacket Temperature Limit (if used)		N/A	~~~
Physical Size - Fluid Volume	(gal)	500	~~~
- Diameter	(in)	48	~~~
- Height	(in)	78	~~~
Design Pressure (Min/Max)	(psig)	-2.5/2.5	~~~
Design Temperature	(deg F)	125	~~~
Corrosion Allowance		TBD	~~~
Other Loads		See Note 1	~~~
Fabrication & Inspection Data			
Additional Radiography		N/A	~~~
Impact Values		N/A	~~~
Weld Hardness		N/A	~~~
Other N.D.T.		N/A	~~~
Stress Relief		N/A	~~~
Weld Finish		N/A	~~~
Code Certification Required		Yes	~~~
Weights			
Empty	(lbs) *		~~~
Internals	(lbs) *		~~~
Insulation	(lbs)	N/A	~~~
Total Flooded Weight	(lbs) *		~~~
Shipping	(lbs) *		~~~
During Hydrotest	(lbs) *		~~~
Fluid Contents	(lbs) *		~~~
Lining	(lbs) *		~~~

Material Specifications				Rev.
	Design	Grade	Description	
Design Code	API-650	Atmospheric Tank		~~~
Shell	ASTM A240		304L SST	~~~
Head/Top/Bot.	ASTM A240		304L SST	~~~
Internals	ASTM A240/A312	TP	304L SST	~~~
Bolts	ASTM A320	B8M	300 Series SST	~~~
Nuts	ASTM A194	8M	300 Series SST	~~~
Reinf. Pads	ASTM A240		304L SST	~~~
Supports	ASTM A240/A276/A479		304L SST	~~~
Cladding/Lining	*		*	~~~
Wear Plates	ASTM A240		304L SST	~~~
Clips	ASTM A240		304L SST	~~~
Jacketing	N/A			~~~

Finish (Applicable Stds./Specs.)		
Internal Finish *		~~~
External Finish *		~~~

Mixer			
Vendor		NA	~~~
Tank Turnover	(per hr)	NA	~~~
Impeller Dia.	(in)	NA	~~~
RPM	(rpm)	NA	~~~
Drive Motor	(hp/Vac/ph)	NA	~~~
Shaft & Impeller Material		NA	~~~

Manufacturers Data			
Manufacturer *			~~~
Model Number *			~~~
Vendor	- Name		~~~
	- Address		~~~
	- Location		~~~
	- Phone		~~~
	- Fax		~~~
Registration Number *			~~~
Allowable Stress	(psi) *		~~~
Shell Thickness	(in) *		~~~
Head Thickness	(in) *		~~~

Comments/Notes:

1. Refer to Section 13 4800 for seismic criteria.
2. Tank physical sizes listed are nominal. Refer to 60239831-MCAL-023, *RLWTF LLW Process Equipment Weights and Sizes*, for physical size details.

*Vendor to provide/verify this information

AECOM	DS-009, LLW Evaporator Condensate Tank				Specification No. 43 4116	
	Rev.	By	Date	Comment	Sheet	Date
	~~	~~~	~~~	~~~	2 of 2	~~~
					Checked By	Approved By
					~~	~~~
					Purchase Order:	
Project RLWTF-UP					Requisition No.:	

N

NOZZLE SCHEDULE		
NOZZLE	CONNECTION	SERVICE
N1	1/2" FLG. 150#	LLW-217 INLET
N2	6" FLG. 150#	INSPECTION PORT
N3	1/2" FLG. 150#	LLW-227 TO P-1706
N4	6" FLG. 150#	LEVEL ELEMENT
N5	1" FLG. 150#	VENT PORT
N6	1" FLG. 150#	OVERFLOW
N7	1/2" FLG. 150#	LLW-234 INLET

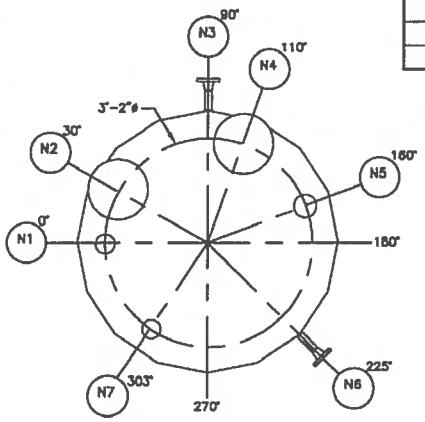

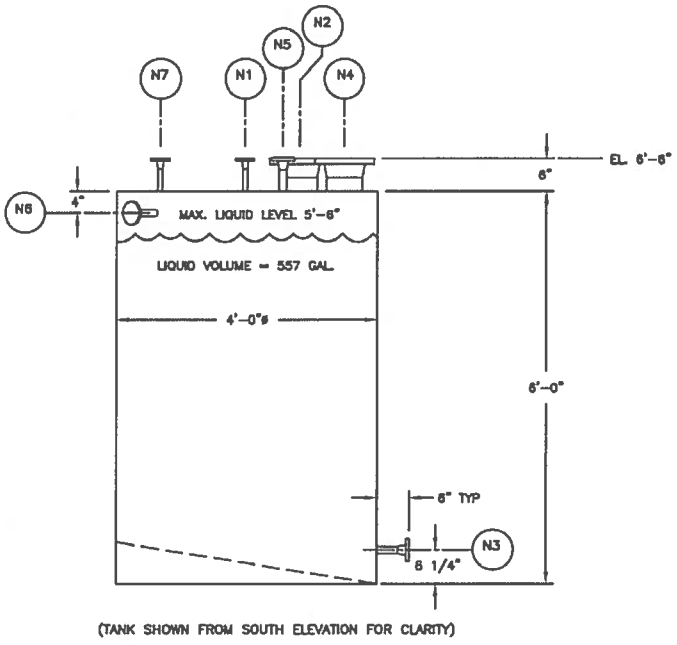

(TANK SHOWN FROM SOUTH ELEVATION FOR CLARITY)

TK-1706

AECOM

DS-010, LLW Rotary Press Filtrate Tank				Specification No. 43 4116	
Rev.	By	Date	Comment	Sheet	Date
~~	~~~	~~~	~~~	1 of 2	~~~
				Checked By	Approved By
				~~	~~~
				Purchase Order:	
				Requisition No.:	

Project	RLWTF-UP		
Tag No.	TK-1707		
PFD #	C55864, Sheet D-6000	Stream No.	16
P&ID #	C55864, Sheet D-6023	Quality Assurance Level	General Service

Operating Data			Rev.
Service		Storage	~~~
Fluid		LLW	~~~
Fluid Spg.		1.0	~~~
pH Range		4 - 12	~~~
Normal Pressure	(psia)	11.3	~~~
Pressure Range	(psia)	11.1-11.5	~~~
Normal Temperature	(deg F)	75	~~~
Temperature Range	(deg F)	50-85	~~~
Ambient Temperature Range	(deg F)	50-85	~~~
Design Data (See Note 3)			
Type of Head (or Top)		Flat	~~~
Type of Head (or Bottom)		Conical	~~~
Jacket? If so, state function (cooling or heating)		N/A	~~~
Jacket Temperature Limit (if used)		N/A	~~~
Physical Size - Fluid Volume	(gal)	100	~~~
- Diameter	(in)	36	~~~
- Height	(in)	66	~~~
Design Pressure (Min/Max)	(psig)	-2.5/2.5	~~~
Design Temperature	(deg F)	125	~~~
Corrosion Allowance		TBD	~~~
Other Loads		See Note 1	~~~
Fabrication & Inspection Data			
Additional Radiography		N/A	~~~
Impact Values		N/A	~~~
Weld Hardness		N/A	~~~
Other N.D.T.		N/A	~~~
Stress Relief		N/A	~~~
Weld Finish		N/A	~~~
Code Certification Required		Yes	~~~
Weights			
Empty	(lbs) *		~~~
Internals	(lbs) *		~~~
Insulation	(lbs)	N/A	~~~
Total Flooded Weight	(lbs) *		~~~
Shipping	(lbs) *		~~~
During Hydrotest	(lbs) *		~~~
Fluid Contents	(lbs) *		~~~
Lining	(lbs) *		~~~

Material Specifications				Rev.
	Design	Grade	Description	
Design Code	API-650	Atmospheric Tank		~~~
Shell	ASTM A240		304L SST	~~~
Head/Top/Bot.	ASTM A240		304L SST	~~~
Internals	ASTM A240/A312	TP	304L SST	~~~
Bolts	ASTM A320	B8M	300 Series SST	~~~
Nuts	ASTM A194	8M	300 Series SST	~~~
Reinf. Pads	ASTM A240		304L SST	~~~
Supports	ASTM A240/A276/A479		304L SST	~~~
Cladding/Lining	*		*	~~~
Wear Plates	ASTM A240		304L SST	~~~
Clips	ASTM A240		304L SST	~~~
Jacketing	N/A			~~~
Finish (Applicable Stds./Specs.)				
Internal Finish *				~~~
External Finish *				~~~
Eductor (See Note 2)				
Size (IPS) *				~~~
Tank Turnover (per hr)		10		~~~
Flowrate gpm *				~~~
Entrainment Ratio (min)		4-5		~~~
Material		316 SS		~~~
				~~
Manufacturers Data				
Manufacturer *				~~~
Model Number *				~~~
Vendor - Name				~~~
- Address				~~~
- Location				~~~
- Phone				~~~
- Fax				~~~
Registration Number *				~~~
Allowable Stress (psi) *				~~~
Shell Thickness (in) *				~~~
Head Thickness (in) *				~~~

Comments/Notes:

1. Refer to Section 13 4800 for seismic criteria
2. Tank Eductor sizing to be provided by Vendor.
3. Tank physical sizes listed are nominal. Refer to 60239831-MCAL-023, *RLWTF LLW Process Equipment Weights and Sizes*, for physical size details.

*Vendor to provide/verify this information

AECOM	DS-010, LLW Rotary Press Filtrate Tank				Specification No.	
					43 4116	
	Rev.	By	Date	Comment	Sheet	Date
	~~	~~~	~~~	~~~	2 of 2	~~~
					Checked By	Approved By
					~~	~~~
					Purchase Order:	
Project RLWTF-UP					Requisition No.:	

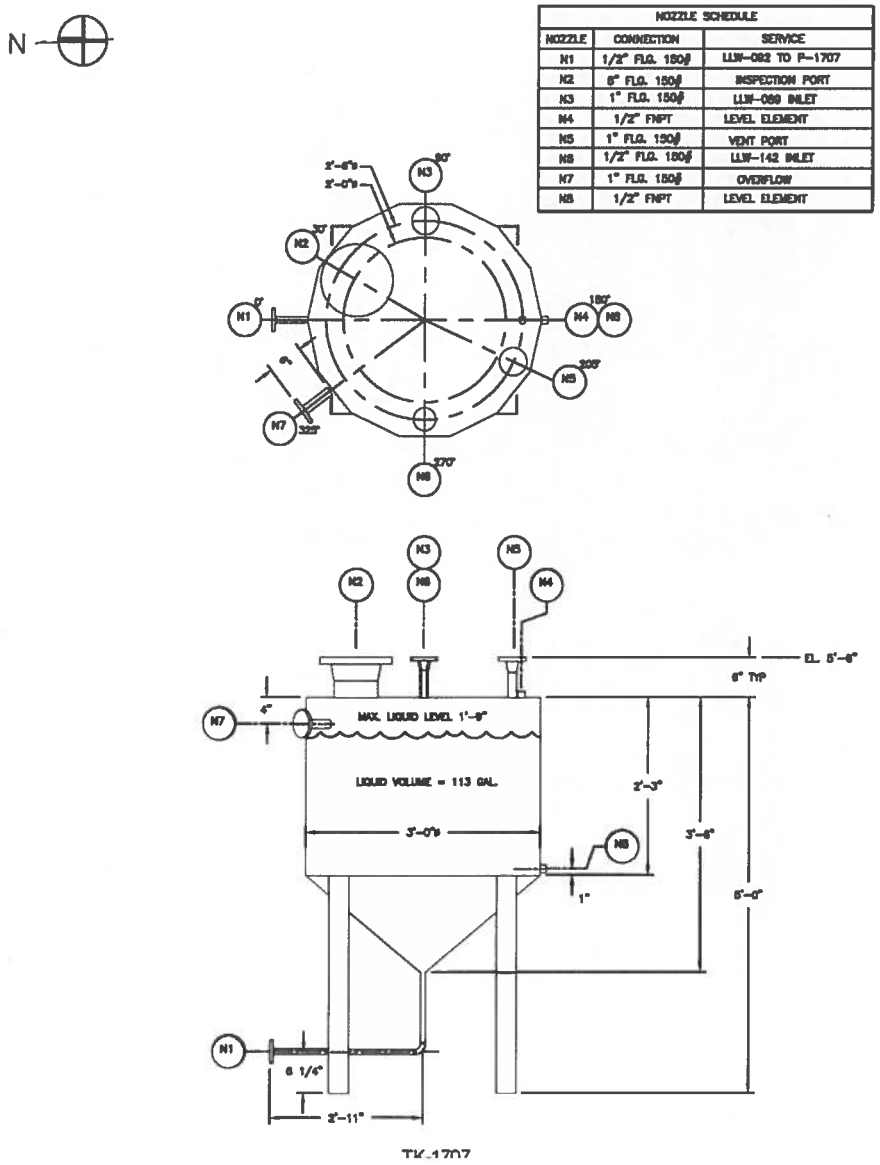

END OF SECTION

FOR LANL USE ONLY

This project specification is based on LANL Master Specification 43 4116, Rev. 1, dated July 17, 2008.

SECTION 43 4117

CHEMICAL DOSING SYSTEM PUMPS AND DAY TANKS

PART 1 GENERAL

1.1 SCOPE

A. This specification establishes the technical requirements for the design, materials of construction, fabrication, testing, shipment, and quality assurance of Chemical Dosing System stations and appurtenances.

B. There are seven chemical dosing stations in the RLWTF Process Area and two chemical dosing stations in the LLW Effluent Sample Building. Each dosing station shall include a day tank equipped with foot valve strainer, suction tubing, pulse metering pump (mounted on the day tank), discharge tubing with back pressure/check valve injectors and pressure relief tubing, power cords and signal cables. Selected dosing stations will also be equipped with agitators (see Data Sheet DS-001, Attachment 1). The day tanks shall sit in anchored secondary containment which will be provided separately.

C. The Chemical Dosing System day tanks shall be 50-gal made of HDPE with nominal dimensions 32-1/2" high x 22" dia max. The diameter of the tanks may not be exceeded to ensure they fit into the secondary containment. The day tanks shall be equipped with mounting area for metering pumps and agitators, and with 1" and 4" fill ports with caps. The metering pumps shall be top mounted on the day tank. The metering pumps shall be of the Neptune PZ/PZi type (Neptune Bulletin PZ-08) or equivalent. In the Process Area, metering pumps are of the programmable PZi8 type or the external input PZi4 type. In the LLW Effluent Sample Building, the metering pumps are manual control PZ type.

D. The following is a summary of supplier responsibilities described in this specification:

1. Design/fabricate pumps and day tanks in accordance with:
   a. This specification,
   b. Supplier's Los Alamos National Laboratory (LANL)-approved drawings, and
   c. Other referenced documents.
2. Furnish design data required by this specification to document design of the pumps and day tanks.
3. Procure equipment, materials, or supplies to complete the work, unless otherwise stated.
4. Test and inspect as required by this specification.
5. Furnish the data required by this specification to document that required tests and inspections have been performed.
6. Package, ship, and deliver the pumps and day tanks.
7. Provide LANL full access to the facility for performing random or scheduled inspections and/or surveillance of work performed.

1.2 SYSTEM DESCRIPTION

A. General Design Requirements

1. Chemical dosing stations shall be hydraulically and electrically tested at the factory and shall be assembled to the fullest extent possible.

2. For tank operating conditions, design data, and configuration, refer to Data Sheet DS-001 (Attachment 1) and for pump design data refer to Data Sheet DS-002 (Attachment 1).

3. Design, fabricate, test, and label chemical dosing stations in accordance with:

   a. This specification,
   b. Supplier's LANL-approved drawings, and
   c. Applicable regulations.

4. LANL will review and comment on design calculations and drawings. The LANL review does not release the supplier from responsibility to design and fabricate the chemical dosing stations in accordance with applicable regulations and this specification.

5. Chemical dosing stations shall be furnished with all required lubricants, special tools, and installation instructions.

1.3 RELATED SECTIONS

A. Section 01 2500, "Substitution Procedures."

B. Section 01 4000, "Quality Requirements."

C. Section 01 4200, "Abbreviations and Acronyms, Definitions, and References."

D. Section 01 8116, "Facility Environmental Requirements."

1.4 ABBREVIATIONS AND ACRONYMS, DEFINITIONS, AND REFERENCES

A. Refer to Section 01 4200, "Abbreviations and Acronyms, Definitions, and References."

B. Drawing C55864, Sheet D-6000, "Process Flow Diagram."

C. Drawing C55864, Sheet D-6011, "Reaction/Precipitation System Mixing Chamber P&ID."

D. Drawing C55864, Sheet D-6012, "Reaction/Precipitation System TK-1101 P&ID."

E. Drawing C55864, Sheet D-6016, "Reverse Osmosis System TK-1301 P&ID."

F. Drawing C55864, Sheet D-6020, "Reverse Osmosis System TK-1304 P&ID."

G. Drawing C55864, Sheet D-6035, "MFV and ISOLOK Sampler Diagram."

H. Drawing C55867, Sheet D-6412, "Effluent Storage System Sample – pH Adjustment P&ID."

I. 60239831-MCAL-027, *Pump Sizing for Chemical Dosing Systems.*

J. 60239831-PCAL-001, *LLW Bounding Material Balance.*

1.5 SUBMITTALS

Submit the following in accordance with the requirements of Exhibit I:

A. Equipment list with manufacturer's names, model numbers, and catalog cut sheets.

B. Provide reference to LANL Project ID Number and LANL Subcontract Number on correspondence.

1. Drawings, Calculations, and Supporting Data

a. Submit design drawings, calculations, and supporting data prior to beginning chemical dosing stations fabrication. LANL will review and comment on design calculations and drawings. The LANL review does not release the supplier from responsibility to design and fabricate the chemical dosing stations in accordance with applicable regulations, and this specification. Include assumptions and input/output data with the calculations. If computer calculations are performed, include the name of the calculation program and the version number.

2. Quality Assurance/Quality Control

a. Notifications: Notify LANL at least 7 days in advance for Acceptance Testing and Final Inspection.

b. Submit a Lower Tier Services Plan if outside subcontractors will perform some of the work. Provide LANL with the name, address, telephone number, and point of contact for outside services that the supplier intends to use on this project. Identify the specific work requirements of this specification that will be performed by those outside services.

c. Submit a Fabrication Schedule.

d. Material Control Procedure: Prior to fabrication, submit for LANL approval a material control procedure to be used in the execution of the work. Describe the control methods and traceability documentation in the procedure used by the supplier to handle and monitor the use of controlled materials. Address in the procedure items such as procurement controls, segregation of materials, and traceability of materials from receipt at the shop through processing and final assembly.

e. Fabrication Procedures: If applicable, submit a copy of:

1) Leak Test Procedure.

f. Test Reports: If applicable, submit a copy of:

1) Leak Test Report, and
2) Protective Coating Test Report.

g. Shipping Submittals: Submit a copy of:

1) Supplier's Cleaning Procedure,
2) Supplier's Packaging Procedure, and
3) Bill of Lading with the chemical dosing stations shipment.

3. Nonconformances

a. Submit a written request to LANL for any proposed technical changes, exceptions, and/or deviations to this specification or other Subcontract documents. Do not implement proposed changes, exceptions, or deviations until the LANL Subcontract Technical Representative (STR) provides written approval.

b. Conflicts: Notify LANL as soon as possible in the event of conflicts among the specifications, drawings, and/or the manufacturer's recommended processes or instructions.

4. Warranty: Supplier is to guarantee the chemical dosing stations at design conditions and warrant that materials and workmanship, plus apparatus supplied (if any), are in accordance with Subcontract document requirements.

5. Provide Operations & Maintenance Manual, with detailed instructions for performance of any required maintenance activities, including as a minimum: lubrication, refurbishment/overhaul, calibration/testing and spare parts list.

1.6 QUALITY ASSURANCE

A. Work identified in this section shall be done under a Quality Assurance Program in accordance with Section 01 4000, "Quality Requirements."

B. The Supplier's Quality Assurance Program shall control a combination of design, materials, preparation, fabrication, inspection, testing, cleaning, packaging, and shipping that have to be done correctly to ensure the production of an acceptable finished product.

C. Tanks shall be furnished by a firm qualified and regularly engaged in this type of work. Supplier shall maintain shop and facilities suitable for fabrication of chemical dosing stations.

1.7 DELIVERY, STORAGE, AND HANDLING

A. Shipping Preparation: Mode and method of transporting are to be mutually agreed on by the Supplier and Subcontractor prior to fabrication and delivery of the chemical dosing stations. The packaging procedure submitted for prior approval by Subcontractor shall be used. For safety considerations, a means of pressure relief is to be provided on the tank during shipping to prevent pressure buildup and/or to equalize pressure due to elevation and/or temperature changes.

B. Shipping and Receiving: Provide LANL with a copy of the bill of lading concurrent with the shipment. Properly and clearly describe the shipment on the bills of lading. At final destination, Subcontractor will inspect the shipment as necessary to ensure that received items have not been damaged during shipment and that required items and supporting documentation have been received. The receipt inspection by LANL at Los Alamos constitutes final acceptance.

1.8 SITE CONDITIONS

A. Design and select the chemical dosing stations to operate in the environmental conditions specified in Section 01 8116, "Facility Environmental Requirements."

PART 2 PRODUCTS

2.1 PRODUCT OPTIONS AND SUBSTITUTIONS

A. Comply with Section 01 2500, "Substitution Procedures."

2.2 MANUFACTURERS

A. Neptune (Bulletin PZ-08).

B. LMI Milton-Roy.

C. Grundfos.

D. Pulsafeeder.

2.3 MATERIALS

A. Materials of construction for the pumps, day tanks, and tubing shall be compatible with the chemicals listed in Data Sheet DS-002 (Attachment 1). Manufacturer will select all materials in contact with chemical and guarantee their suitability for the particular service. Manufacturer shall document appropriate quality control on incoming raw material.

B. Protective Linings, Coatings, and Insulation

1. Tank supplier shall evaluate the design conditions supplied by Subcontractor and determine whether tank linings, coatings, and/or insulation may be required. If so, Supplier shall recommend the preferred materials to Subcontractor for concurrence and approval.

2.4 FABRICATION

A. Cleaning:

1. After fabrication is completed, and before testing and inspection, clean, de-scale, and degrease the tank and associated components. Clean exterior surfaces, but take particular care to clean the inside of the tank thoroughly. Methods may include cleaning by hot water spray, etc.

2. After final rinse, dry inside surfaces using heat, lint-free cloth or other means to ensure cleanliness. If de-ionized water is used for the final rinse, the tank may be allowed to evaporate to dryness.

3. Finished tanks must be free of dirt, oil, solvents, and interior moisture. Ensure that the cleanliness of the tanks meet the approval of LANL at the time of the final inspection.

2.5 SOURCE QUALITY CONTROL

A. General

1. The Subcontractor shall qualify Inspection Personnel performing acceptance inspections. In addition, the Subcontractor shall document all qualifications.

2. The results of inspections shall be documented and submitted to the Subcontractor Technical Representative for review.

B. Manufacturer shall provide the test location, equipment, instrumentation of certified accuracy, and any supplementary temporary connections and auxiliary parts necessary to fully execute the tests. Test personnel qualified to conduct, record, and verify test results shall be provided. LANL shall be provided with a minimum seven (7) working day advance written notice of shop acceptance tests.

Submit the test results as part of the Quality Assurance Document Package in accordance with Exhibit I.

PART 3 EXECUTION

3.1 INSTALLATION

A. Unload with equipment having sufficient lifting capacity to avoid damage to the tanks.

B. No modifications shall be made to any equipment without prior written approval from the Buyer.

3.2 SCHEDULES

A. To be provided by Subcontractor upon award.

Chemical Dosing System Day Tank Data Sheet

AECOM	DS-001, Chemical Dosing Tank				Specification No. 43 4117	
	Rev.	By	Date	Comment	Sheet	Date
	~~	~~~	~~~	~~~	1 of 1	~~~
					Checked By	Approved By
					~~	~~~
					Purchase Order:	
Project RLWTF-UP					Requisition No.:	

Tag No.	TAC-4001	TAC-4003	TAC-4007	TAC-4011	TAC-4013		
	TAC-4002	TAC-4006	TAC-4010	TAC-4012			

PFD #	C55864, Sheet D-6000	Stream No.	6, 7, 10, 24, 25, 43 & 44
P&ID #	C55864, Sht D-6011, D-6012, D-6016 & D-6020 C55867, Sht D-6412	Quality Assurance Level	General Service

Operating Data			Rev.
Service		Storage	~~~
Fluid		See Note 2	~~~
Fluid Density	(g/ml)	See Note 2	~~~
Fluid Concentration	(%)	See Note 2	~~~
Location	(Indoors/Outdoors)	Indoors	~~~
Normal Pressure	(psia)	Atm	~~~
Pressure Range	(psia)	N/A	~~~
Normal Temperature	(deg F)	75	~~~
Temperature Range	(deg F)	50-85	~~~
Ambient Temperature Range	(deg F)	50-85	~~~

Manufacturers Data			
Manufacturer	(See Note 5)	*	~~~
Model Number		*	~~~
Vendor			~~~
	- Address		~~~
	- Location		~~~
	- Phone		~~~
	- Fax		~~~

Design Data			Rev.
Configuration		See Note 4	~~~
Design Capacity	(gal)	50	~~~
Type of Head	(Open/Closed)	Closed	~~~
Inside Diameter (Nominal)	(in)	22	~~~
Inside Height (Nominal)	(in)	33	~~~
Material Thickness - Body	(in) *		~~~
Material Thickness - Top	(in) *		~~~
Material Thickness - Bottom	(in) *		~~~
Material of Construction		HDPE	~~~
Lining	*	(See Note 3)	~~~
Design Pressure (Min/Max)	(psig)	-2.5/2.5	~~~
Design Temperature	(deg F)	125	~~~
Other Loads: - Wind		N/A	~~~
- Snow		N/A	~~~
- Seismic		See Note 1	~~~
Physical Interface Data			
Weight - Empty	(lbs) *	20	~~~
Weight - Full	(lbs) *		~~~

Comments/Notes:

1. Refer to Section 13 4800 for seismic design criteria.
2. TAC-4001 is a Chemical Dosing Tank for 36% $Fe_2(SO_4)_3$ (Density 1.45 g/ml); also equipped with Neptune economy agitator.
   TAC-4002 is a Chemical Dosing Tank for 25% $MgSO_4$ (Density 1.28 g/ml); also equipped with Neptune economy agitator.
   TAC-4003, -4006, -4010 & -4013 are Chemical Dosing Tanks for 25% NaOH (Density 1.28 g/ml);
   TAC-4007, -4011 & -4012 are Chemical Dosing Tanks for 93% H_2SO_4 (Density 1.83 g/ml);
3. Tank surfaces to be coated (as required) with material compatible with chemicals identified in Note 2.
4. Tanks are closed top, 50 gallon, with standard 1-in and 4-in fill ports (caps provided).
5. Tanks shall be Neptune, Model ST50 (Bulletin PZ-08), or equivalent based on performance characteristics.
6. Agitators shall be Neptune economy agitator, Model AN-E50 (Bulletin PZ-08), or equivalent.
7. Pressure relief on metering pump shall vent into dosing tank.

*Vendor to provide/verify this information

AECOM

DS-002, Chemical Addition Pumps				SPEC. No. 43 4117		Rev. ~~
NO.	BY	DATE	REVISION	SHEET 1	OF 1	DATE ~~
				BY ~~	CHK'D ~~	APPR. ~~
				P.O.		
Project: RLWTF-UP				REQ.		

1. Fluid	See Service Column Below	18. Type	Pulse Metering Pump, Positive Displacement
2. Pump Case	*	19. MFR.	Tacmina
3. Insulation	*	20. Model No.	Series PZ/PZi4/PZi8 Depending on service
4. TDH	11 ft		
5. Impeller/Shaft	*		
6. Frame	*	21. Motor Size	*
7. Capacity	1.6 gph except P-4003 which is 5.7 gph	22. Air Pressure	N/A
8. Gaskets/O-rings	*	23. Air Consumption	N/A
9. Stator Fill	*		
10. Liners	*		
11. Operating Temp	50 F to 85 F		
12. Voltage	120 VAC		
13. Hertz	60 Hz		
14. Phase	1		
15. RPM	*	24. Vendor	Neptune (see Bulletin PZ-08)
16. Design Temp	125 F		
17. Design Pressure	*		

Rev.	Tag. No.	Line no. /Equip.	P&ID	Sheet	T (°F)	Pressure (psig)		Neptune	Service	Notes
					Max.	Norm.	Max.	Model		
~~	P-4001	~~	C55864	D-6011	125	4.8	*	PZi8-12-VFC	Ferric Sulfate (36 wt%)	2
~~	P-4002	~~	C55864	D-6011	125	4.8	*	PZi8-12-VFC	Magnesium Sulfate (25 wt%)	2
~~	P-4003	CS-012-FH-01	C55864	D-6012	125	4.8	*	PZi4-32-VEC	Sodium Hydroxide (25 wt%)	3
~~	P-4006	CS-028-FH-01	C55864	D-6016	125	4.8	*	PZi4-12-VEC	Sodium Hydroxide (25 wt%)	3
~~	P-4007	CS-029-FH-01	C55864	D-6016	125	4.8	*	PZi4-12-FTC	Sulfuric Acid (93 wt%)	3
~~	P-4010	CS-268-FH-01	C55864	D-6020	125	4.8	*	PZi4-12-VEC	Sodium Hydroxide (25 wt%)	3
~~	P-4011	CS-264-FH-01	C55864	D-6020	125	4.8	*	PZi4-12-FTC	Sulfuric Acid (93 wt%)	3
~~	P-4012	~~	C55867	D-6412	125	4.8	*	PZ-12-VEC	Sodium Hydroxide (25 wt%)	4
~~	P-4013	~~	C55867	D-6412	125	4.8	*	PZ-12-FTC	Sulfuric Acid (93 wt%)	4

NOTES:
1. Refer to 60239831-MCAL-027, Pump Sizing for Chemical Dosing Systems, for pump sizing details.
2. Model PZi8-12-VFC shall be equipped with flow meter, and receive input direct from FI-1102 for proportional dosing.
3. Model PZi4-12 receives input from FCS to regulate pH.
4. Model PZ-12 is manual pump operated for specified time to batch dose Effluent Tanks for pH adjustment.
5. Chemical dosing pumps are mounted on corresponding TAC (TAC-4001, TAC-4002, etc.)
6. Vendor shall verify that material of construction is compatible with service (i.e., -VFC for sulfates, -VEC for caustic, -FTC for sulfuric acid)
7. Pressure relief on metering pump shall vent into dosing tank.

* Information to be provided by Vendor

END OF SECTION

SECTION 44 1100

AIR POLLUTION CONTROL EQUIPMENT – STACK AIR SAMPLING SYSTEM

PART 1 GENERAL

1.1 SCOPE

A. This section includes the specification for the design and installation of the Stack Air Sampling System (SASS). The SASS comprises an integrated system designed to obtain a representative "record' sample of the effluent discharge from the LLW Treatment Building stack.

B. Design and install the SAS System in accordance with the requirements of ANSI/HPS N13.1 1999 (Sampling and Monitoring Releases of Airborne Radioactive Substances from the Stacks and Ducts of Nuclear Facilities) for Potential Impact Category 2.

C. The following information is intended to supplement or emphasize applicable sections of ANSI/HPS N13.1. This is not intended as a definitive design guide. It is incumbent upon the Subcontractor to ensure that design and installation are compliant with the referenced standard.

1. Sampling shall be provided for the stack using a shrouded probe, per ANSI N13.1-1999 guidance. A continuous sample of stack air shall be pulled at a constant flow rate through a filter to capture airborne radioactive particulate matter. Filter media will be removed and analyzed at a separate location on a cyclic basis, per guidance from the LANL Rad-NESHAP compliance team.

2. Exhaust stack flow rate is expected to vary by more than 20% during a year therefore continuous flow measurement control shall be used.

1.2 SECTION INCLUDES

A. Stack Sampler assembly for quantifying airborne concentration of pollutants.

1. The following components will be furnished and installed by the Subcontractor:

   a. Filter Media Housing
   b. Vacuum Pump
   c. Stack Flow and Temperature Instrumentation
   d. Sample Line Flow and Temperature Instrumentation
   e. Sample Line Pressure Instrumentation
   f. Sample Line Heat Trace and Controls
   g. Weather tight, equipment enclosures
   h. Network connection to Facility Control System
   i. All fittings, sample tubing and miscellaneous devices necessary to complete the system.

2. Operational testing will be performed by the Subcontractor

3. Acceptance testing will be performed by the LANL ENV-CP organization, with assistance from the Subcontractor, as required.

1.3 RELATED SECTIONS

A. Section 01 4000, "Quality Requirements."

B. Section 01 4200, "Abbreviations and Acronyms, Definitions, and References."

C. Section 01 8116, "Facility Environmental Requirements."

D. Section 40 1813, "Low-Vacuum Systems Process Piping."

E. Section 43 1129, "Gas Handling Vacuum Pumps."

1.4 ABBREVIATIONS AND ACRONYMS, DEFINITIONS, AND REFERENCES

A. Refer to Section 01 4200, "Abbreviations and Acronyms, Definitions, and References."

1.5 SUBMITTALS

A. Submit the following in accordance with the requirements of Exhibit I:

1. Submittals shall consist of shop drawings, catalog data sheets, graphic displays, and software development parameters as defined in the following paragraphs. No materials shall be purchased and no work shall be conducted at the job site until submittals have been reviewed and approved.

2. Shop drawings shall be provided that show the detailed equipment layout, material list, sequence of operation and communications architecture. These documents shall be provided in either Microsoft Word or PDF format. All connections between system components shall be clearly indicated. The submittal shall indicate the required coordination with equipment supplied by sources other than this section. The intention is for the shop drawings to be comprehensive enough for the installation crew to complete all aspects of the installation without the need for supporting documentation, except third party equipment installation manuals. All wiring shown on the drawings shall be labeled on both ends and these labels shall be used in the installation process for ease of comparing the shop drawings to the actual field installation. Each component shall be given a unique identifier. This identifier shall be used in creating equipment field device labels and in the sequence of operation so that each device can be matched uniquely to the drawings. Identifiers shall match those shown on Stack Air Sampling System P&ID (Drawing C55864, Sheet M-6106) to the extent practical.

3. Shop drawings shall show equipment and enclosure mounting requirements including dimensions, weight and center of gravity.

4. The sequence of operation for the system shall be provided with reference to the device identifier. The sequence of operation shall break down the operation by major function (e.g., normal operation, standby, purging, etc.) and describe in detail the correct operation and interaction with other system functions. Description shall reference actual device identifiers. Point-list tables shall be included to describe alarm, monitoring, interlock, and other general functions.

5. A complete material listing shall be included on the shop drawings that show the device model numbers, device identifiers, quantities, manufacturers, etc., of all equipment provided under this section. The

material list shall be organized in alphabetical order so that it can be easily compared to the associated catalog data sheets.

6. Catalog data sheets shall be provided for each different piece of equipment provided under this section. At a minimum, the data sheet shall contain sufficient information so that compliance with the specification can be verified. Where multiple models or options are indicated on the same catalog data sheet, the equipment proposed shall be circled or otherwise indicated (highlighter is not acceptable because of copy quality). The catalog data sheets shall be organized in alphabetical order to match the material listing on the shop drawings.

7. Point verification and sensor calibration forms shall be submitted for all points and sensors that are installed as part of the system. Once approved, the Contractor shall complete the forms during startup to document successful point functionality and sensor calibration. The completed forms shall be included as part of the record documentation. The LANL Construction Inspector reserves the right to designate a representative to monitor completion of the point verification.

8. Submit system design documentation and calculations showing assurance that completed system will meet the testing requirements of 40 CFR 60 Appendix A Method 2 for determining velocity and volumetric flow rate of stack effluent.

9. Provide Operations & Maintenance Manual, with detailed instructions for performance of any required maintenance activities, including as a minimum: lubrication, refurbishment/overhaul, calibration/testing and spare parts list.

10. Project record documents:

    a. Report of Subcontractor field tests showing compliance with field testing and inspection specified in PART 3 of this specification section.

    b. Certificate of Compliance signed by LANL's ENV-CP organization, indicating their acceptance of the installation.

1.6 QUALITY ASSURANCE

A. Work Identified in this section shall be done under a Quality Assurance Program in accordance with Section 01 4000, "Quality Requirements."

A. Conform to requirements of the *National Electrical Code* (NEC) (NFPA 70).

B. Furnish electrical products listed and labeled by a nationally recognized testing laboratory (NRTL) as suitable for purposes specified and shown.

C. Conform to ASME B31.3 for sample line installation.

1.7 QUALIFICATIONS

A. None.

1.8 ENVIRONMENTAL REQUIREMENTS

A. See Section 01 8116, "Facility Environmental Requirements," for facility environmental requirements.

1.9 RECEIVING, STORING, PROTECTING, AND HANDLING

A. Receive, store, protect, and handle sampler components and equipment according to manufacturer's instructions and according to the specification sections referenced within this section.

PART 2 PRODUCTS

2.1 PRODUCT OPTIONS AND SUBSTITUTIONS

A. Where specific manufacturers and part numbers are listed, items must be furnished as specified. No substitutes are acceptable on items specified by part number and manufacturer unless otherwise stated.

2.2 LANL-SUPPLIED COMPONENTS

A. None.

2.3 CONSTRUCTION COMPONENTS (SUBCONTRACTOR-SUPPLIED)

A. Mechanical

1. Shrouded Probe: Recommended model Hi-Q Environmental Products, Model RF-111
2. Particulate Filter Housing: LANL will provide both the housing and sample media.
3. Cartridge Filter Housing: Subcontractor shall provide a Hi-Q Environmental Products, Model #ILPH-20 housing. LANL will provide the sample media.
4. Enclosures
   a. Recommended enclosure is Hi-Q WH-36.
   b. All equipment located exterior to the RLWTF building conditioned space shall be in NEMA 3R or 4 weather tight enclosures. See Stack Air Sampling System P&ID drawing M-6106.
5. Tubing: seamless stainless steel.
   a. Sample Line (from shrouded probe to filter housing): 1.5" seamless stainless steel with minimal bends. Bends in the sample line shall be low loss and meet requirements of ANSI/HPS N13.1-1999 with a radius of curvature of at least 3 times the inside diameter of the tubing.
   b. The distance between the sample probe and "record" sampler shall be kept as short as possible to minimize deposition and resuspension of particles and also to minimize particle-gas or gas-gas interactions. The sampling line cross section, air-flow characteristics, and number and angles of bends in the line shall be such that deposition of particles on the walls of the line is minimized
   c. Vacuum line between media and pump shall be flex tubing, 18 to 36 in. in length, between media and pump and shall be sized by vendor using swaged double ferrule fittings. It does not need to be seamless tubing.

d. Return Line (after pump back to stack) shall be 1" with swaged double ferrule fittings. It does not need to be seamless tubing.

6. Pipe fittings: stainless steel.

7. Insulation: Cerablanket or equal.

B. Vacuum Pumps

1. Vacuum pump shall be Sutorbilt model #2MP-GAA-MDPA with Leeson Electric motor #A6C17CR1C.

2. Sized to maintain flow rate for anticipated filter loading. 1725 rpm recommended.

3. Local controls via Hand-Off-Auto switches and remote control via network connection.

C. Stack Instrumentation

1. The main exhaust stack is 26" diameter with wall thickness of 12 gage stainless steel, and with a design flow of 11,885 acfm and velocity of 3200 to 4,000 fpm.

2. Provide stack flow instrumentation.

3. Provide stack temperature instrumentation.

D. Sample Line Instrumentation

1. Sample flow controls shall be designed to maintain 2 acfm.

2. Analog sample line flow control valve.

3. Provide programmed sample flow timer for measuring uptime/downtime with a minimum of one year capacity and one hour resolution (minimum). Recommended part Hi-Q.net part #EET11 vacuum switch.

E. Electrical

1. All equipment enclosures and heat trace to be operable on single phase 120V AC.

2. Heat Trace, self limiting, 4W/ft, 120V ac; to prevent condensation in sample lines.

3. Heat Trace controls to be located in Vacuum Pump enclosure

a. Thermostat, 10A minimum, 120V ac

b. Pilot Light, Green, 120V ac

c. Terminal Blocks, 20A 600V ac

d. Heat trace to be protected by GFCI

PART 3 EXECUTION

3.1 EXAMINATIONS

A. None.

3.2 PREPARATION

A. None.

3.3 INSTALLATION – GENERAL

A. Install stack sampler assembly in accordance with the design drawings and this Specification.

B. If there is a conflict between this Specification and the design drawings, bring it to the attention of the Project Engineer for resolution who shall contact ENV-CP for resolution.

3.4 INSTALLATION – FIXED AIR SAMPLER EQUIPMENT

A. Mechanical

1. Install sample lines in accordance with Section 40 1813, "Low-Vacuum Systems Process Piping."

2. Install vacuum pump in accordance with Section 43 1129, "Gas Handling Vacuum Pumps."

B. Electrical

1. Install power to enclosures in accordance with the design drawings and applicable sections of Division 26, "Electrical."

2. Stack Air Sampling System enclosure shall be provided with a quadruplex (4) outlet receptacle.

3.5 SCHEDULES

A. None.

3.6 FIELD INSPECTIONS AND TESTS

A. Mechanical

1. Test and inspect sample lines in accordance with Section 40 1813," Low-Vacuum Systems Process Piping."

2. Test and inspect vacuum pump in accordance with Section 43 1129, "Gas Handling Vacuum Pumps."

B. Electrical

1. Test and inspect electrical installation in accordance with applicable sections of Division 26, "Electrical."

2. Submit test results as required by these sections.

C. Sample Locations

1. Prior to operations, ENV-CP staff will perform tests to determine acceptability of proposed sampling site.

3.7 FIELD QUALITY CONTROL

A. Coordinate with a representative from LANL's Environmental Protection Division during Stack Sampler start-up and vacuum pump adjustment.

1. Provide support, as required, to resolve start-up or issues related to Subcontractor's scope of work.

B. Provide Certificate of Compliance signed by LANL's Radiation Protection organization, indicating acceptance of the installation.

END OF SECTION

SECTION 44 4616

SLUDGE DEWATERING EQUIPMENT – ROTARY PRESS
AND DRUM LOADING ENCLOSURE

PART 1 GENERAL

1.1 INTRODUCTION

A. The Low-Level Waste (LLW) Dewatering System will be comprised primarily of a Rotary Press to accommodate 100 percent of the design volume for one batch of thickened solids from the LLW Dewatering System's sludge thickener. The filtrate is pumped and collected in a holding tank and returned to the influent (reaction) tanks. The concentrated sludge from the Rotary Press (FLT-1704) is discharged to the Drum Loading System (ENC-1703) and packaged in 55-gallon drums. Weigh station (WI-1730) weighs the contents in the drum as it is filled.

1. It shall be the responsibility of the Subcontractor to flow down the requirements described within this specification to the equipment Supplier. Subcontractor shall review Supplier information for compliance with this specification prior to submitting information to LANL.

B. The following is a summary of supplier responsibilities described in this specification:

1. Design/fabricate a Rotary Press, Filtrate Basin/Drain Pump, Drum Loading Enclosure, Drum Scale, and related equipment in accordance with:

   a. This specification,
   b. Supplier's LANL-approved drawings, and
   c. Other referenced documents.

2. Furnish design data required by this specification to document Rotary Press and Drum Loading Enclosure designs.

3. Ensure that the Rotary Press discharge chute interfaces properly with the Drum Loading Enclosure (ENC-1703).

4. Procure equipment, materials, or supplies to complete the work, unless otherwise stated.

5. Test and inspect as required by this specification and referenced standards.

6. Furnish the data required by this specification to document that required tests and inspections have been performed.

7. Package, ship, and deliver the Rotary Press, Filtrate Basin/Drain Pump, Drum Loading Enclosure, Drum Scale, and related equipment.

8. Provide LANL full access to the facility for performing random or scheduled inspections and/or surveillance of Work performed.

1.2 RELATED SECTIONS

A. Section 01 2500, "Substitution Procedures."

B. Section 01 4000, "Quality Requirements."

C. Section 01 4200, "Abbreviations and Acronyms, Definitions, and References."

D. Section 01 8116, "Facility Environmental Requirements."

E. Section 13 4800, "Sound, Vibration, and Seismic Control."

F. Section 22 0554, "Identification for Plumbing, HVAC, and Fire Piping and Equipment."

G. Section 26 0700, "Induction Motors – 500HP and Smaller."

1.3 ABBREVIATIONS AND ACRONYMS, DEFINITIONS, AND REFERENCES

A. Refer to Section 01 4200, "Abbreviations and Acronyms, Definitions, and References."

B. Codes, specifications, and standards referred to by number or title form a part of this specification to the extent required. Use codes, specifications, and standards referenced of the latest revision at the time of award of contract, unless otherwise stated.

1.4 PROCESS DOCUMENTS

A. Drawing C55864, Sheet D-6000, "Process Flow Diagram."

B. Drawing C55864, Sheet D-6024, "Solids Collection & Concentration System Rotary Press P&ID."

C. Drawing C55864, Sheet Q-5107, "Filter Press Drum Loading Station Detail."

D. 60239831-PCAL-001, *LLW Bounding Material Balance*.

1.5 SUBMITTALS

A. Submit the following in accordance with the requirements of Exhibit I:

1. Drawings, Calculations and Supporting Data:

a. Submit design drawings, calculations, and supporting data before beginning fabrication of the Rotary Press and associated equipment. LANL will review and comment on design calculations and drawings. The LANL review does not release the Supplier from responsibility to design and fabricate the Rotary Press in accordance with applicable regulations and this specification. Include assumptions and input/output data with the calculations. If computer calculations are performed, include the name of the calculation program and the version number. See Section 01 4000, "Quality Requirements", for software requirements.

b. Provide logic diagrams and a Sequence of Operation that describe the operation of Rotary Press.

c. Allowable nozzle loads necessary for pipe stress analysis shall be supplied by the subcontractor to the contractor for review 30 days prior to scheduled installation date.

d. Coordinate base locations with embed plates shown on drawings.

2. Quality Assurance/Quality Control:

   a. Notifications. Notify LANL at least seven days in advance for Acceptance Testing and Final Inspection.

   b. Submit a Lower Tier Service Plan if outside Subcontractors will perform some of the Work. Provide LANL with the name, address, telephone number, and point of contact for outside services that the Supplier intends to use on this project. Identify the specific Work requirements of this specification that will be performed by those outside services.

   c. Submit a Fabrication Schedule.

   d. Material Control Procedure. Before fabrication, submit for LANL approval a material control procedure to be used in the execution of the Work. Describe the control methods and traceability documentation in the procedure used by the Supplier to handle and monitor the use of controlled materials, such as stainless steel and welding filler rod.

   e. Fabrication Procedures. Submit a copy of:

      1) Welding Procedure Specifications (WPS),
      2) Welding Procedure Qualification Record (WPQR),
      3) Welding and Nondestructive Examination (NDE) Personnel Listing, and
      4) Liquid Penetrant Test Procedure.

   f. Certifications. Submit a copy of:

      1) Welder Performance Qualification Records and
      2) NDE Personnel Certifications.

   g. Material certifications (CMTR) for steel, weld filler materials, and certify the chloride content (C of C) of materials used in fabrication of stainless steel.

   h. Certifications. Submit a copy of:

      1) Certificate of Conformance (CoC) for the Rotary Press, Drum Loading Enclosure, and associated hardware that is signed or otherwise authenticated by the responsible managers within the supplying organization and that certifies the conformance of the end-items to the order requirements. The CoC must include:

         a) Copy of the Rotary Press manufacturer's Quality Assurance Plan identifying procurement, fabrication, test and inspection, material traceability, and nonconformity controls for approval.

         b) Certification that the Rotary Press and associated equipment have been designed, manufactured, and constructed in accordance with the manufacturer's Quality Assurance Plan.

         c) Certification documentation showing that the Rotary Press meets the design requirements, including Qualification and Test Acceptance reports, and material requirements.

i. Test Reports. Submit a copy of:

1) Liquid Penetrant Test Report ,
2) Protective Coating Test Report (if applicable).

j. Shipping Submittals. Submit a copy of:

1) Supplier's Cleaning Procedure,
2) Supplier's Packaging Procedure, and
3) Bill of Lading with the Rotary Press shipment.

3. Design Changes:

a. Submit a written request to LANL for any proposed technical changes, exceptions, and/or deviations to this specification or other Contract documents. Do not implement proposed changes, exceptions, or deviations until the LANL Subcontract Technical Representative (STR) provides written approval.

b. Conflicts. Notify STR, as soon as possible, in the event of conflicts among the specifications, drawings, and/or the manufacturer's recommended processes or instructions.

4. Warranty: Supplier is to guarantee the Rotary Press and associated equipment at design conditions and warrants that materials and workmanship, plus apparatus supplied, if any, are in accordance with Contract document requirements.

5. Provide Operations & Maintenance Manual, with detailed instructions for performance of any required maintenance activities, including as a minimum: lubrication, refurbishment/overhaul, calibration/testing and spare parts list.

6. Submit test procedures and test reports identified in Paragraph 3.3 of this section.

1.6 QUALITY ASSURANCE AND QUALITY CONTROL

A. Work identified in this section shall be done under a Quality Assurance Program in accordance with Section 01 4000, "Quality Requirements."

B. The Supplier's Quality Assurance Program shall control a combination of design, materials, preparation, fabrication, inspection, testing, cleaning, packaging, and shipping that have to be done correctly to ensure the production of an acceptable finished product.

C. The Rotary Press shall be furnished by a firm qualified, accredited, and regularly engaged in this type of Work. Supplier shall maintain a Quality Control Program.

1.7 SITE CONDITIONS

A. Design Rotary Press and associated equipment for a design altitude of 7,500 ft above sea level. See Section 01 8116, "Facility Environmental Requirements," for additional environmental requirements. Seismic design requirements are located in 2.12.

1.8 SCHEDULE

A. Provide a design schedule showing design steps, design submittal milestones, and review periods. Include milestones associated with the design phases 60% and 100%. Provide design schedule to STR, for approval, at the kick-off meeting.

B. Indicate design phases and review periods. Plan on a 10 working day period for each LANL review cycle.

C. Provide a revised design schedule for STR approval within 7 working days of a modification to the subcontract document, which revises the required delivery date, or when other approved LANL changes otherwise change a schedule assembly step hold point, test, or inspection.

1.9 DELIVERY, STORAGE, AND HANDLING

A. Shipping Preparation: Mode and method of transporting, and the extent of assembly are to be mutually agreed on by the Supplier and Subcontractor before fabrication and delivery of the Drum Loading Enclosures. The packaging procedure submitted for prior approval by Subcontractor shall be used.

B. Shipping and Receiving: Provide STR with a copy of the Bill of Lading concurrent with the shipment. Properly and clearly describe the shipment on the Bills of Lading. At final destination, Subcontractor will inspect the shipment, as necessary, to ensure that received items have not been damaged during shipment and that required items and supporting documentation have been received.

PART 2 PRODUCTS

2.1 GENERAL

A. All products and manufacturers may be substituted with approved equal products of manufacturers in accordance with Section 01 2500, "Substitution Procedures".

1. All substituted products or manufacturers must be submitted to LANL for review and approval.

2. Submit product data and catalog cut sheets for substituted products or manufacturers.

B. All compressed air components required for the operation of the Rotary Press shall be provided by the equipment vendor.

C. Material of Construction Compatibility: Selection of fasteners and interfacing components (bolts, nuts, washers, unions, gaskets, etc) shall be based on required performance (e.g., strength, fluid compatibility) and avoidance of potential for galvanic corrosion (e.g., connection/contact of dissimilar metals).

D. Stand-alone Programmable Logic Controller control for the Rotary Press (Allen-Bradley preferred) shall be furnished.

E. Provide an approved means for the Rotary Press controller to communicate with the LANL's control system.

F. All monitored signals will be communicated to LANL's control system.

G. LANL's control system will be able to select the Rotary Press and enable/disable its operation.

H. A single point (480 VAC) termination for incoming power shall be provided. A single, lockable, disconnecting device to isolate incoming power shall also be provided.

I. Drawing 55864, Sheet Q-5107 illustrates the general arrangement of the Drum Loading Enclosure.

2.2 DATASHEETS

A. See the datasheet in Attachment 1 for FLT-1704, regarding solids concentration requirements and specification details.

B. See the datasheet in Attachment 1 for specification details for the Drum Loading Enclosure and Drum Scale.

2.3 ENGINEERING DOCUMENTS

A. Engineering Documents:

1. Develop documents in a legible fashion and in the English language. Develop engineering documents using Microsoft Word. Provide calculations in a typewritten fashion or handwritten in pencil or black ink. The use of software packages like Mathcad and Microsoft Excel for development of calculations is acceptable. Request approval from LANL for use of any other software package not defined herein.

2. Validate and benchmark software used for calculations including engineering calculations, cost estimates, etc. in accordance with the supplier's quality assurance procedure requirements.

B. Document calculations with sufficient information on the purpose of the calculation, the design basis, assumptions, reference data, methods, results, and conclusions to permit a technically qualified reviewer, including LANL, to determine their suitability for the intended purpose without recourse to the originator.

2.4 DRAWINGS

A. Detailed Enclosure Drawings

1. Develop drawings in accordance with the *LANL Drafting Standards Manual* and standard industrial machine design practices. Where the following requirements conflict with the *LANL Drafting Standards Manual*, the Drafting Manual takes precedence. Include the following in enclosure drawing packages: assembly drawings, miscellaneous details; dimensioning; tolerancing; parts list; and weld maps.

a. Develop and produce drawings in accordance with ASME Y14-series documents.

b. Provide dimensional tolerances in accordance with ASME Y14.5M.

c. Provide surface texture symbols in accordance with ASME B46.1.

d. Provide welding symbols in accordance with AWS A2.4.

e. Produce drawings using a commercial Computer Aided Design/Drafting (CADD) application. Provide electronic files of design drawings in drawing exchange format (.dxf) or AutoCAD format (.dwg).

f. Provide a drawing list of drawings generated with the enclosure drawing package. Update list as design progresses. Transmit list as title sheet of drawing package each time drawings are transmitted to LANL.

2. Provide sufficient detail on drawings to show materials for components, weld details, dimensions, and tolerances.

B. Complete process piping and instrumentation diagram (P&ID) for solids concentration system.

C. Detailed, dimensioned general arrangement drawing(s) to indicate all piping runs, show all valves and instrumentation and maintenance access clearances.

D. Size (length, width, height, and other pertinent dimensions of all major equipment).

E. Equipment list with manufacturer's names, model numbers, and catalog cut sheets.

2.5 PERFORMANCE AND DESIGN CONDITIONS

A. For composition of process stream see system material balance 60239831-PCAL-001.

2.6 ROTARY PRESS MANUFACTURERS

A. Prime Solution, Inc.

2.7 ROTARY PRESS DISCHARGE CHUTE

A. Discharge chute shall be designed and fabricated to allow for "Bag-in / Bag-out" procedures when replacing a filled waste drum.

2.8 ELECTRONIC DRUM SCALE

A. Enclosure shall be provided with an electronic drum scale with weight indicator. Suggested Drum Scale manufacturer: Force Flow.

B. Weight indicator for local monitoring only.

2.9 DRUM LOADING ENCLOSURE

A. The Drum Loading Enclosure shall be designed to accommodate the waste packaging process activities described in Paragraph 1.1.

B. The Drum Loading Enclosure shall meet the intent of AGS-G001-1998.

C. Drum Loading Enclosure ENC-1703 will be exhausted by the facility HVAC system and therefore the internal pressure will be negative relative to the room pressure. Enclosure design pressure to be a maximum -0.47 in. w.g.

D. Requirements for shielding of the fill station containment enclosure are not currently required.

E. A Drum Loading Enclosure preliminary and final design specification shall be submitted to LANL as part of the bid proposal and final design approval.

F. Provide reference to LANL Project ID Number, LANL Contract Number, Equipment Number, Equipment Title, and Drawing Number on all submittals.

2.10 ENCLOSURE MATERIALS

A. For enclosure shell materials use stainless steel type 304L.

B. Stainless Steel Sheet:

1. Fabricate enclosure from 300-series stainless steel. Use 7-gauge sheet stock with a No. 2B mill finish on both sides conforming to ASTM A 240/A 240M and ASTM A 480/A 480M for shell material.

2. It is recommended that the supplier purchase stainless steel sheet with a protective coating on both sides to protect the mill finish.

3. Provide to LANL a Certified Material Test Report, as part of the QA Document Package in accordance with Exhibit I.

C. Stainless Steel Plate:

1. When plate stock is required for use as a reinforced floor or as mounting pads for equipment, use the same grade of stainless steel as the shell material per ASTM A 240/A 240M.

D. Stainless Steel Bars and Shapes:

1. Provide structural bars and shapes used in enclosure fabrication in the same grade of stainless steel as the enclosure shell material, meeting the requirements of ASTM A 276.

2. Where approved by LANL, equivalent shapes may be fabricated by bending the appropriate sheet or plate stock.

E. Stainless Steel Structural Shapes:

1. Provide stainless steel structural shapes including channel, I-beam, and L-angle per the chemical and physical requirements of ASTM A 276. Provide CMTR's with structural shapes.

F. Stainless Steel Structural Tubing:

1. Ensure square and rectangular tubing used for the support stand meet the chemical and physical requirements of ASTM A 554.

G. Stainless Steel Weld Studs

1. Ensure Capacitive Discharge (CD) weld studs welded to the exterior of the enclosure are 300 series stainless steel and meet the chemical requirements of ASTM A 276. Ensure weld studs welded to the interior of the enclosure are of the same type stainless steel as the enclosure shell. Provide CoCs with CD weld studs.

H. Welding Materials:

1. Use filler materials that conform to ASME B&PV Code, Section II, Part C and as follows:

Base Material	Filler Material

Type 304L SS	ER 308 L, or ER 347

2. Provide CMTRs or CoCs for welding filler materials used in the fabrication process as part of the QA Document Package in accordance with Exhibit I.

2.11 GENERAL PRINCIPLES AND PERFORMANCE REQUIREMENTS

A. Design enclosure to provide a confinement of the equipment and processes within it under normal operating and incident conditions.

B. Design the enclosure structure to be rigid enough to resist deflections caused by ventilation pressure differentials, temperature fluctuations or seismic loading.

C. The enclosure shall have the capacity to capture 25 gallons of liquid waste below access door threshold.

D. Enclosure will have a drum scale designed such that it will not move during drum loading and unloading.

E. The enclosure shall have a platform or false bottom that will keep the scale device out of the 25 gallon spillage containment area. Scale platform shall be designed to carry the load of a full waste drum. Platform shall be designed for easy removal for housekeeping purposes. Platform shall be designed such that the scale device or the platform itself will not move during drum loading and unloading operations.

2.12 SEISMIC DESIGN

A. Design enclosure to withstand a design basis earthquake (DBE). Design spectral response acceleration parameters: five-percent damped design spectral response acceleration at short periods, S_{DS} = 0.75g, and at 1-second period, S_{D1} = 0.64 g. Refer to LANL *Engineering Standards Manual* (ESM) STD-342-100 for additional requirements.

B. The performance category of the enclosure is PC-1.

C. Perform seismic analysis of the enclosure in accordance with the applicable performance category requirements and as stated in DOE-STD-1020 and DOE-STD-1021 and LANL ESM (STD-342-100, Chapter 5, "Structural").

D. In the seismic analysis, determine demand to capacity (D/C) ratios for the enclosure and the enclosure floor anchoring.

2.13 ENCLOSURE SHELL

A. The inner wall/shell of the enclosure requires regular routine cleaning to remove operational deposit. Make inner faces accessible and, as much as possible, unobstructed. Upper surfaces may be accessed using cleaning tools at the discretion of LANL.

B. If enclosure stiffening is required, weld stiffeners externally to the enclosure. Provide stiffeners as plate, strip, or sheet welded normal to the surface of the enclosure. Provide stiffeners of the same grade of stainless steel as the shell material.

C. Material:

1. Design enclosure shell using 300-series stainless steel of type 304, 304L, 316, or 316L. Provide designs with stainless steel sheet material of 7 gauge, cold rolled, annealed, and pickled per ASTM A 240/A 240M and ASTM A 480/A 480M, with a 2B mill finish.

2. Use plate stock of the same grade of stainless steel, when thicker material is required, such as for floors supporting heavy objects. Provide a continuous and contiguous transition between plate stock and sheet on the inner surfaces of the shell so that crevices within the enclosure interior are avoided.

2.14 POWER AND RECEPTACLE

A. Provide junction box located on top exterior of enclosure for connection to 120VAC 20A branch circuit. Enclosure shall be provided with interior wiring and raceways for powering receptacle from the incoming branch circuit.

B. Provide two duplex GFCI NEMA 5-15R receptacles, one located inside the enclosure for power to internal instruments (i.e., the scale) and one located exterior for power to the Filtrate Basin/Drain Pump.

2.15 VENTILATION SYSTEM

A. Drum Loading Enclosure ventilation duct to be equipped with a type 300-series stainless steel 3" Class 150 flange.

B. Enclosure will be exhausted by the facility HVAC system and therefore the internal pressure will be negative relative to the room pressure.

C. Enclosure shall meet the intent of AGS-G001-1998.

D. Drum Loading Enclosure ventilation inlet to be managed by leaving a minimum 1.5 to a maximum 1.8 square foot gap at the bottom of the enclosure door.

2.16 LIFTING POINTS

A. Incorporate lifting features, (i.e. bolts or lugs) into the enclosure design as required. Design and position lifting features to prevent distortion of the enclosure. Design lifting features to accept lifting by forklift and crane and mark features appropriately.

2.17 ENCLOSURE PENETRATIONS AND UTILITIES

A. Provide sealed penetration for Rotary Enclosure discharge chute.

PART 3 EXECUTION

3.1 EXAMINATIONS

A. General:

1. The Subcontractor shall qualify Inspection and Test Personnel performing acceptance inspections and testing. In addition, the Subcontractor shall document all personnel qualifications.

2. The results of inspections and tests shall be documented and submitted to the Subcontractor Technical Representative for review.

B. Nondestructive Examinations:

1. Structural-steel welds shall be visually examined, as a minimum, in accordance with AWS D1.1/D1.1M and shall meet the acceptance criteria stated in AWS D1.1/D1.1M. Additional NDE testing requirements shall be as shown on drawings or as required by AWS D1.1/D1.1M.

2. NDE Personnel shall be qualified to American Society of Nondestructive Testing (ASNT) SNT-TC-1A.

3. Pipe welding shall be visually examined in accordance with ASME B31.3.

C. Final Inspections:

1. Final inspections shall be performed in accordance with the Seller's standard practices. At a minimum, the Seller shall verify that the critical dimensions of all equipment conform to those in the associated datasheet.

3.2 INSTALLATION

A. The Rotary Press equipment shall be installed in accordance with applicable codes, regulations, and standards identified below (see Section 01 4200, "Abbreviations and Acronyms, Definitions, and References"):

1. 10 CFR 830;
2. 29 CFR 1910;
3. 40 CFR 264;
4. AGS-G001-1998;
5. AISC, *Manual of Steel Construction—Allowable Stress Design*;
6. ASME B31.3;
7. ASNT SNT-TC-1A;
8. AWS QC-1;
9. AWS D1.1/D1.1M;
10. AWS D1.3;
11. AWS D1.6;
12. *New Mexico Administrative Code*, Title 20, "Environmental Protection," Chapter 4, "Hazardous Waste," Part 1, "Hazardous Waste Management;" and
13. NFPA 70.

B. Equipment shall be handled to avoid damage. Appropriate hoisting and rigging equipment with sufficient lifting capacity for each maneuver shall be used.

C. No modifications shall be made to any equipment without prior written approval. This includes any welding, adding penetrations, or repairing damage.

3.3 TESTING

A. Factory Acceptance Testing (FAT):

1. The rotary press shall be hydrostatically tested. The results shall be recorded and a video record of the hydrostatic tests shall be submitted to LANL with test records and documents.

2. LANL will provide representative simulants and the Seller shall conduct testing to verify dewatering performance.

3. Before performing the FAT, a FAT procedure shall be submitted to LANL for review and approval.

4. The results of the FAT shall be documented and submitted to LANL for review and approval before final acceptance of equipment.

5. The FAT performed by the Seller shall include, as a minimum and not limited to, a hydro-test in which the rotary press is filled with water and then pressurized.

6. The Seller shall provide qualified Inspectors per ASNT SNT-TC-1A for all NDE inspections and for operational tests in this section.

B. Inspection and Test Plan/Report Forms:

1. An inspection and operational testing plan/report form shall be prepared to govern inspection and final operations test activities.

2. Inspection forms shall contain, at a minimum, sign-offs for appropriate test and inspection personnel, including quality assurance; measuring and test equipment (M&TE) number and due date; and a reference to the inspection criteria (for example, drawing number or specification number). Seller's standard forms can be used provided the above information is included in the document.

3. Inspection and test result forms shall summarize the scope of the inspection, results, and the findings, if any.

4. Test plans and reports shall be submitted as deliverables to LANL.

5. Before shipment, the electric panel shall be assembled, wired, and functionally tested at the Seller's facility. All equipment will be operated during testing.

6. Each electrical motor shall be tested as required by Section 26 0700, "Induction Motors – 500HP and Smaller."

7. Nondestructive Examinations:

a. Structural-steel welds shall be visually examined, as a minimum, in accordance with AWS D1.1/D1.1M and shall meet the acceptance criteria stated in AWS D1.1/D1.1M. Additional NDE testing requirements shall be as shown on drawings or as required by AWS D1.1/D1.1M.

b. The NDE shall be conducted by personnel qualified to (ASNT TC-1A).

8. Certified copies of the test results shall be furnished to LANL for approval before shipment.

C. Engage a factory authorized service representative to support commissioning.

3.4 SCHEDULES

A. To be provided by Subcontractor upon award.

Sludge Dewatering Equipment – Rotary Press Data Sheet

AECOM	DS-001, Rotary Press				Specification No. 44 4616	
	Rev.	By	Date	Comment	Sheet	Date
	~~	~~~	~~~	~~~	1 of 2	~~~
					Checked By	Approved By
					~~	~~~
					Purchase Order	
Project RLWTF-UP					Requisition No.	

PFD #	C55864, Sheet D-6000	Stream No.	15 (Influent); 16 (Filtrate); 17 (Sludge)
P&ID #	C55864, Sheet D-6024	Quality Assurance Level	General Service

Operating Conditions:			Rev
Location (Indoors/Outdoors)		Indoors	~~~
Ambient Temperature	(°F)	50-85	~~~
Operation	(continuous/intermittent)	Intermittent	~~~
Elevation	ft ASL	7500	~~~

			Rev
Operation	- Days per year	145	~~~
	- Hours per day	6	~~~
Environment	- Radioactive	Yes	~~~
	- Toxic	Yes	~~~
	- Corrosive	Yes	~~~
	- Flammable	No	~~~
		Note 8	

Rotary Press Influent Design Conditions			
Phase		Liquid/Solid	~~~
Design Capacity	(gpm)	up to 7	~~~
Operating Temp (Nom)	(° F)	77	~~~
Operating Temp (Max)	(° F)	120	~~~
Solids Content	(wt%)	16.3	~~~
Specific Gravity	SG	1.1	~~~
pH	pH	10.8	~~~
Composition		Note 4	~~~

Rotary Press Sludge Design Conditions			
Phase		Liquid/Solid	~~~
Design Capacity	(gpm)	1.2	~~~
Operating Temp (Nom)	(° F) *		~~~
Operating Temp (Max)	(° F) *		~~~
Solids Content	(wt%)	35.2	~~~
Specific Gravity	SG	1.26	~~~
pH	pH	10.8	~~~
Composition		Note 4	~~~

Rotary Press Filtrate Design Conditions			
Phase		Liquid	~~~
Design Capacity	(gpm)	up to 7	~~~
Operating Temp (Nom)	(° F) *		~~~
Operating Temp (Max)	(° F) *		~~~
Solids Content	(wt%)	0.3	~~~
Specific Gravity	SG	1	~~~
pH	pH	10.8	~~~
Composition		Note 4	~~~

Rotary Press Design Data	Tag No. FLT-1704		
Design Capacity (Feed)	(gpm) *		~~~
Design Capacity (Sludge)	(lbs/hr) *		~~~
Material of Construction (Wetted Parts)	*		~~~
		Note 5	

Filtrate Basin/Drain Pump	Tag No. P-1708		
Design Capacity (Filtrate)	(gpm)	Note 6	
TDH	(ft)	19.25	
Material of Construction (Wetted Parts)		Basin: Polypropylene	
		Pump: Bronze	

Sludge Feed Pump	Tag No. *		
Type	*		~~~
Manufacturer	*		~~~
Model No.	*		~~~
Capacity	(gpm) *		~~~
TDH	(ft) *		~~~
NPSHR	(ft) *		~~~
Multi-Stage (Yes/No)	*		~~~
Number of Stages	*		~~~
Design Temperature	(°F) *		~~~
Design Pressure	(psig) *		~~~
Material Of Construction	*		~~~
Electrical	(Volt/Hz/Phase) *		~~~
Motor Size	(hp) *	Note 3	~~~

Air Compressor	Tag No. *		
Type	*		~~~
Manufacturer	*		~~~
Model No.	*		~~~
Capacity (Free Air Delivery)	(cfm) *		~~~
Pressure (Working)	(psi) *		~~~
Pressure (Max)	(psi) *		~~~
Tank Capacity	(gal) *		~~~
Electrical	(Volt/Hz/Phase) *		~~~
Motor Size	(hp) *	Note 3	~~~

AECOM	DS-001, Rotary Press				Specification No. 44 4616	
	Rev.	By	Date	Comment	Sheet	Date
	~~	~~~	~~~	~~~	2 of 2	~~~
					Checked By	Approved By
					~~	~~~
					Purchase Order	
Project RLWTF-UP					Requisition No.	

Process Interface Data				Utility Interface Data			
Sludge Inlet				**Electrical Service**	(Volt/Hz/Phase) *	480/60/3	~~~
Connection Size	(in) *	2"	~~~		(FLA) *		~~~
Connection Type		Note 2	~~~				
Connection Material	*		~~~	**Water (Non-Potable)**			
				Flow Rate	(gpm) *		~~~
Sludge Bypass				Connection Size	(in) *	1"	~~~
Connection Size	(in) *	1 1/2"	~~~	Connection Type		Note 7	~~~
Connection Type		Note 7	~~~	Connection Material	*		~~~
Connection Material	*		~~~				
Filtrate Line							
Connection Size	(in) *	1 1/2"	~~~				
Connection Type		Note 7	~~~				
Connection Material	*		~~~				
Interface Physical Data & Weights							
Rotary Press Skid							
Weight	(lb) *	1,500	~~~				
Nominal Dimensions (L x W x H)	(in) *	89 x 45 x 72	~~~				

Comments/Notes:

* Denotes data to be supplied/confirmed by vendor.

1. Motors <250 hp shall be 480 VAC, 3 phase, 60 hz.
2. Sludge inlet process connection is 150# ANSI flange (or 300# ANSI flange if required by the subcontractors design).
3. Motor sizes shall be determined during preliminary testing at Seller's facility.
4. For composition of waste streams see system material balance 60239831-PCAL-001.
5. Rotary Press shall be Prime Solution, Model RFP18S-SKE, or equivalent based on performance characteristics.
6. Filtrate Basin/Drain Pump shall be Zoeller Pump Co., Model 59 drain pump or equivalent based on performance. Pump shall have sufficient capacity to keep ahead of the Rotary Press drainage and sufficient head to lift filtrate to TK-1707.
7. All process (except sludge inlet) and utility connections are FNPT.
8. When process influent TDS concentration is typical, Rotary Press operation will be intermittent (e.g., every other day for one or two hours). Operation approaches continuous only when influent TDS is near the administrative limit, which is unlikely to be a persistent condition.

Sludge Dewatering Equipment – Drum Loading Enclosure Data Sheet

AECOM	DS-002, Drum Loading Enclosure (ENC-1703)				Specification No. 44 4616	
	Rev.	By	Date	Comment	Sheet	Date
	~~	~~~	~~~	~~~	1 of 1	~~~
					Checked By	Approved By
					~~	~~~
					Purchase Order	
Project RLWTF-UP					Requisition No.	

PFD #	C55864, Sheet D-6000	Stream No.	17 (Solids) and 18 (Output)
P&ID #	C55864, Sheet D-6024	Quality Assurance Level	General Service

Operating Conditions:			Rev				Rev
Location (Indoors/Outdoors)			Indoors	~~~	Operation	- Days per year	144	~~~
Ambient temperature	(°F)		50 - 85	~~~		- Hours per day	6	~~~
Operation	(Continuous/Intermittent)		Intermittent	~~~	Elevation	ft ASL	7500	~~~
					Environment	- Radioactive	Yes	~~~
						- Toxic	Yes	~~~
						- Corrosive	Yes	~~~
						- Flammable	No	~~~

Containment Enclosure	Tag No. ENC-1703				Drum Scale	Tag No. WI-1730			
Manufacturer		*		~~~	Manufacturer		*		~~~
Model Number		*		~~~	Model Number		*		~~~
Design Waste Flow	(gal/yr)		61612	~~~	Capacity	(lbs)	*	800	~~~
Design Waste Composition			Note 1	~~~	Resolution	(lbs)	*	0.25	~~~
Materials of Construction		*		~~~	Materials of Construction		*		~~~

Enclosure Ventilation	Tag No.			
Manufacturer		*		~~~
Model Number		*		~~~
Ventilation	(Passive/Active)		Active	~~~
Design Flow	(cfm)	*		~~~
Inlet Filter Required	(Yes/No)		Note 2	~~~
Inlet Filter Type			Note 2	~~~
Outlet Filter Required	(Yes/No)		Note 2	~~~
Outlet Filter Type			Note 2	~~~

Process Interface Data				
Waste Feed Line				
Size	(in)	*		~~~
Connection Type		*		~~~
Connection Material		*		~~~
Ventilation				
Duct Size (Inlet/Exhaust)	(in)	*		~~~
Duct Connection Type (Inlet/Exhaust)		*		~~~
Duct Connection Material (Inlet/Exhaust)		*		~~~

Utility Interface Data			
Electrical Service	(Volt/Hz/Phase)	110/60/1	~~~

Interface Physical Data and Weights				
Weight	(lbs)	*		~~~
Nominal Dimensions (L x W x H)	(in)	*		~~~

Comments/Notes:

* Denotes data to be supplied by vendor.

1. For composition of the feedstream see system material balance 60239831-PCAL-001.
2. Inlet and outlet filtration to be provided by others.

END OF SECTION

AECOM

Construction Specification for the TA-50 Radioactive Liquid Waste Treatment Facility Upgrade Project (RLWTF-UP) Low-Level Waste Subproject

60239831-SPEC-001, Revision 1

July 7, 2014

Prepared for
Los Alamos National Laboratory
Los Alamos, New Mexico 87544

Reviewed Classification/UCNI			
Cindy Costa	151054	7/14/14	Unclassified
(Reviewed By)	Z#	(Review Date)	(Classification)

: 12037

AECOM

Construction Specification for the TA-50 Radioactive Liquid Waste Treatment Facility Upgrade Project (RLWTF-UP) Low-Level Waste Subproject

60239831-SPEC-001, Revision 1

Prepared for: Los Alamos National Laboratory
P. O. Box 1663
Los Alamos, New Mexico 87545

Prepared by: AECOM Services, Inc.
201 Third Street NW, Suite 600
Albuquerque, New Mexico 87102

Contract 66355-001-09

Approvals:

Reviewer, Charles Moyers — 07/07/2014
Date

Manuel Tarin, III, Project Manager — 07/07/2014
Date

DISCLAIMER

This report was prepared as an account of work sponsored by an agency of the United States Government. Neither the United States Government nor any agency thereof, nor AECOM Technical Services, Inc., nor any of their employees, make **any warranty, express or implied, or assumes any legal liability or responsibility for the accuracy, completeness, or usefulness of any information, apparatus, product, or process disclosed or represents that its use would not infringe privately owned rights.** Reference herein to any specific commercial product, process, or service by trade name, trademark, manufacturer, or otherwise does not necessarily constitute or imply its endorsement, recommendation, or favoring by the United States Government or any agency thereof, or AECOM Technical Services, Inc. The view and opinions of authors expressed herein do not necessarily state or reflect those of the United States Government or any agency thereof.

AECOM Technical Services, Inc.

AECOM

CERTIFICATION PAGE

The technical material and data contained in this Project Manual were prepared under the supervision and direction of the undersigned, whose seals as professional Architects and Engineers are licensed to practice in the State of New Mexico.

Richard Kaselow	AECOM Technical Services, Inc.
Registered Architect	201 Third St. NW, Ste 600
State of New Mexico	Albuquerque, NM 87102
License Number 002648	(505) 889-4109

AECOM

CERTIFICATION PAGE

The technical material and data contained in this Project Manual were prepared under the supervision and direction of the undersigned, whose seals as professional Architects and Engineers are licensed to practice in the State of New Mexico.

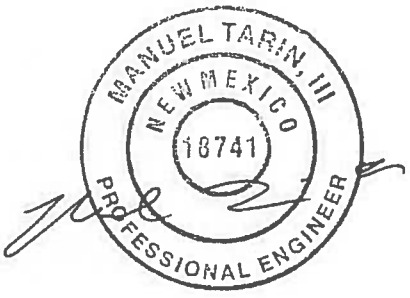

7/7/14

Manual Tarin III	AECOM Technical Services, Inc.
Registered Civil	201 Third St. NW, Ste 600
State of New Mexico	Albuquerque, NM 87102
License Number 18741	(505) 889-4137

7/7/14

Charles Moyers	AECOM Technical Services, Inc.
Registered Mechanical Engineer	201 Third St. NW, Ste 600
State of New Mexico	Albuquerque, NM 87102
License Number 16030	(505) 889-4309

05/02/2014

Gene Moe	AECOM Technical Services, Inc.
Registered Electrical Engineer	201 Third St. NW, Ste 600
State of New Mexico	Albuquerque, NM 87102
License Number 21369	(505) 889-4172

AECOM

CERTIFICATION PAGE

The technical material and data contained in this Project Manual were prepared under the supervision and direction of the undersigned, whose seals as professional Architects and Engineers are licensed to practice in the State of New Mexico.

7/7/14

Evelyn Rogers Registered Chemical Engineer State of New Mexico License Number 22184	AECOM Technical Services, Inc. 10 Patewood Drive Bldg. IV, Suite 500 Greenville, SC 29615 (864) 234 2253

AECOM

CERTIFICATION PAGE

The technical material and data contained in this Project Manual were prepared under the supervision and direction of the undersigned, whose seals as professional Architects and Engineers are licensed to practice in the State of New Mexico.

4/25/14

James M. Weeks
Registered Structural Engineer
State of New Mexico
License Number 11384

Weidlinger, Associates, Inc.
6301 Indian School Rd, Ste 501
Albuquerque, NM 87110
(505) 349-2832

AECOM

CERTIFICATION PAGE

The technical material and data contained in this Project Manual were prepared under the supervision and direction of the undersigned, whose seals as professional Architects and Engineers are licensed to practice in the State of New Mexico.

05-06-2014

Dave Tomecek	Hughes Associates, Inc.
Registered Fire Protection Engineer	520 Courtney Way, Ste A
State of New Mexico	Lafayette, CO 80026-8863
License Number 16716	(303) 439-0485

TABLE OF CONTENTS

SECTION	TITLE
DIVISION 1 – GENERAL REQUIREMENTS	
01 1100	Summary of Work
01 1116	Work by Owner
01 2500	Substitution Procedures
01 3545	Water Discharge Requirements
01 4000	Quality Requirements
01 4200	Abbreviations and Acronyms, Definitions, and References
01 4444	Offsite Welding & Joining Requirements
01 4455	Onsite Welding & Joining Requirements
01 5705	Temporary Controls and Compliance Requirements
01 6000	Product Requirements
01 7700	Closeout Procedures
01 7839	Project Record Documents
01 8116	Facility Environmental Requirements
01 9100	Commissioning LLW Project
DIVISION 2 – EXISTING CONDITIONS	
02 3000	Subsurface Investigation
02 4115	Electrical Demolition
02 4119	Selective Structure Demolition
DIVISION 3 – CONCRETE	
03 1505	Cast-In-Concrete Anchors – High Confidence
03 1534	Post-Installed Concrete Anchors Purchase – Normal Confidence
03 3001	Reinforced Concrete
03 3053	Miscellaneous Cast-In-Place Concrete
03 4100	Precast Structural Concrete
DIVISION 4 – MASONRY	
04 2220	Reinforced Unit Masonry
DIVISION 5 – METALS	
05 1000	Structural Metal Framing
05 2100	Steel Joist Framing
05 3123	Steel Roof Decking
05 4000	Cold-Formed Metal Framing
05 5000	Metal Fabrications
05 5213	Pipe and Tube Railings
05 5350	Gratings and Floor Plates

DIVISION 6 – WOOD, PLASTICS, AND COMPOSITES

06 1000 Rough Carpentry
06 2000 Finish Carpentry

DIVISION 7 – THERMAL AND MOISTURE PROTECTION

07 1113 Bituminous Dampproofing
07 2100 Thermal Insulation
07 4113 Metal Roof Panels
07 4216 Insulated Core Metal Wall Panels
07 5213.13 Atactic-Polypropylene-Modified Bitumen Roofing, Cold-Applied
07 6200 Sheet Metal Flashing and Trim
07 8400 Firestopping
07 9200 Joint Sealants

DIVISION 8 – OPENINGS

08 1100 Metal Doors and Frames
08 3100 Access Doors and Panels
08 3323 Overhead Coiling Doors
08 4113 Aluminum Entrances and Storefronts
08 7100 Door Hardware
08 8000 Glazing
08 8117 Fire-Rated Glass
08 9100 Louvers

DIVISION 9 – FINISHES

09 2116 Gypsum Board Systems
09 3013 Ceramic Tiling
09 5100 Acoustical Ceilings
09 6500 Resilient Flooring
09 6513 Resilient Base and Accessories
09 9100 Painting
09 9600 Special Coatings

DIVISION 10 – SPECIALTIES

10 1405 Exterior Signage
10 1410 Interior Signage
10 2113.13 Metal Toilet Compartments
10 2800 Toilet, Bath, and Laundry Accessories
10 4400 Fire Protection Specialties
10 5113 Metal Lockers

DIVISION 11 – EQUIPMENT

11 5311.08 Enclosure Design
11 5311.10 Enclosure Fabrication
11 5311.12 Enclosure Installation
11 5311.17 Enclosure Instrumentation

DIVISION 12 – FURNISHINGS

12 3100 Manufactured Metal Casework
12 4813 Entrance Floor Mats and Frames

DIVISION 13 – SPECIAL CONSTRUCTION

13 4800 Sound, Vibration, and Seismic Control

DIVISION 14 – CONVEYING EQUIPMENT

Not Used.

DIVISION 21 – FIRE SUPPRESSION

21 1313 Wet-Pipe Sprinkler Systems

DIVISION 22 – PLUMBING

22 0529 Hangers and Supports for Plumbing Piping and Equipment, R1
22 0535 Electric Heat Tracing Systems
22 0548 Vibration and Seismic Controls for Plumbing, Piping and Equipment, R1
22 0554 Identification for Plumbing, HVAC, and Fire Piping and Equipment
22 0713 Plumbing and HVAC Insulation
22 0813 Testing Piping Systems, R1
22 0816 Disinfection of Potable Water Piping
22 1100 Facility Water Distribution
22 1316 Sanitary Waste and Vent Piping
22 1413 Facility Storm Drainage Piping
22 1500 Compressed-Air-Systems
22 3700 Domestic Water Heaters
22 4200 Plumbing Fixtures
22 6213 Vacuum Piping for Laboratory Facilities
22 6219 Vacuum Equipment for Laboratory Facilities
22 6313 Gas Piping for Laboratory and Healthcare Facilities, R1
22 6653 Laboratory Waste and Vent Piping, R1
22 6700 Processed Water Systems for Laboratory Facilities, R1

DIVISION 23 – HEATING, VENTILATION, AND AIR CONDITIONING

23 0593	Testing, Adjusting, and Balancing for HVAC
23 0800	Commissioning of HVAC
23 1123	Facility Natural-Gas Piping
23 2113	Hydronic Piping, R1
23 2123	Hydronic Pumps
23 2300	Refrigerant Piping
23 2500	HVAC Water Treatment
23 3101	HVAC Ducts
23 3225	Bag-in/Bag-out Housings
23 3300	Air Duct Accessories
23 3400	HVAC Fans
23 3600	Air Terminal Units
23 3713	Diffusers, Registers, and Grilles
23 3816	Fume Hoods
23 4100	Particulate Air Filtration
23 4133	High-Efficiency Particulate Filtration
23 5100	Vents and Stacks
23 5233	Water-Tube Boilers
23 6423	Scroll Water Chillers
23 7200	Air-to-Air Energy Recovery Equipment
23 7333	Indoor Indirect-Fuel-Fired Heating and Ventilating Units
23 7413	Packaged, Outdoor, Central-Station Air-Handling Units
23 8126	Split-System Air-Conditioners
23 8216	Air Coils
23 8239	Unit Heaters

DIVISION 25 – INTEGRATED AUTOMATION

25 5000	Integrated Automated Facility Controls

DIVISION 26 – ELECTRICAL

26 0519	Low-Voltage Electrical Power Conductors and Cables
26 0526	Grounding and Bonding for Electrical Systems
26 0529	Hangers and Supports for Electrical Systems
26 0533	Raceways and Boxes for Electrical Systems
26 0536	Cable Trays for Electrical Systems
26 0548	Vibration and Seismic Controls for Electrical Systems
26 0553	Identification for Electrical Systems
26 0700	Induction Motors – 500HP and Smaller
26 0813	Electrical Acceptance Testing
26 2213	Low-Voltage Distribution Transformers
26 2416	Panelboards
26 2419	Motor Control Centers
26 2713	Electricity Metering
26 2726	Wiring Devices
26 2816	Enclosed Switches and Circuit Breakers
26 2913	Enclosed Controllers
26 2923	Variable Frequency Motor Controllers
26 4100	Facility Lightning Protection
26 4300	Surge Protective Devices
26 5100	Interior Lighting
26 5200	Emergency Lighting
26 5600	Exterior Lighting

DIVISION 27 – COMMUNICATIONS

27 1000	Structured Cabling
27 3000	Voice Communications

DIVISION 28 – ELECTRONIC SAFETY AND SECURITY

28 1321	Administrative Access Control System Rough-In
28 3100	Fire Detection and Alarm
28 3233.1	Radiation Detection and Alarm – Personnel Contamination Monitors
28 3233.2	Radiation Detection and Alarm – Hand and Foot Monitors
28 3233.3	Radiation Detection and Alarm – Fixed Air Samplers
28 3233.4	Radiation Detection and Alarm – Alpha Continuous Air Monitors

DIVISION 31 – EARTHWORK

31 2000	Earth Moving
31 2323.33	Flowable Fill

DIVISION 32 – EXTERIOR IMPROVEMENTS

32 1216	Asphalt Paving
32 3113	Chain-Link Fences and Gates
32 9219	Seeding

DIVISION 33 – UTILITIES

33 0513 Manholes and Structures
33 1000 Water Utilities
33 3000 Sanitary Sewerage Utilities
33 3200 Wastewater Utility Pumping Stations
33 4000 Storm Drainage Utilities
33 5100 Natural Gas Distribution
33 7119 Electrical Underground Ducts and Manholes
33 7311 Pad-Mounted Transformer Rough-In
33 7711 Pad-Mounted Switch Rough-In

DIVISION 40 – PROCESS INTEGRATION

40 0511 Compression Fittings on Copper and Stainless-Steel Tubing
40 0527 Piping and Tubing Inspection Checklist
40 1813 Low-Vacuum Systems Process Piping, R1
40 2319 Process Plant Process Piping, R1
40 9100 Primary Process Measurement Devices
40 9113.23 Gas Analysis Process Measurement Devices
40 9200 Primary Control Devices
40 9400 Process Control Hardware and Software
40 9500 Process Control Hardware Interfaces
40 9600 Process Control Software

DIVISION 41 – MATERIAL PROCESSING AND HANDLING EQUIPMENT

Not Used.

DIVISION 43 – PROCESS GAS AND LIQUID HANDLING, PURIFICATION, AND STORAGE EQUIPMENT

43 1129 Gas Handling Vacuum Pumps, R1
43 2100 Liquid Pumps
43 2236 Liquid Evaporators, R1
43 2243 Liquid Filters, R1
43 2260 Liquid Samplers
43 3113 Liquid Purification Filters, R1
43 3236 Mix-Bed Ion-Exchange Vessels
43 3256 Reverse Osmosis Purification Units
43 4116 Atmospheric Tanks and Vessels, R1
43 4117 Chemical Dosing System Pumps and Day Tanks

DIVISION 44 – POLLUTION CONTROL EQUIPMENT

44 1100 Air Pollution Control Equipment – Stack Air Sampling System
44 4616 Sludge Dewatering Equipment – Rotary Press and Drum Loading Enclosure

3 of 3

"LLW Drawings" file

RLWTF–UP LOW LEVEL WASTE SUBPROJECT FINAL DESIGN

BLDG 230, 251, 252, 261 TA–50

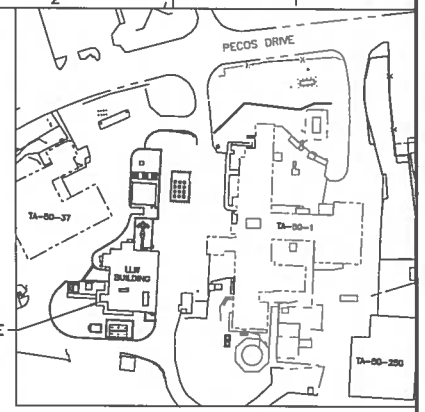

LOCATION PLAN
SCALE: NONE TA–50

PROJECT CODE OF RECORD

IBC, 2009 INTERNATIONAL BUILDING CODE
IECC, 200 INTERNATIONAL ENERGY CONSERVATION CODE
IFC, 2006 INTERNATIONAL FIRE CODE
NFPA 1, UNIFORM FIRE CODE, 2009
NFPA 70, NATIONAL ELECTRICAL CODE, 2011
NFPA 101, LIFE SAFETY CODE, 2009
UMC, 2009 UNIFORM MECHANICAL CODE
UPC, 2009 UNIFORM PLUMBING CODE
LANL ENGINEERING STANDARDS MANUAL

CHAPTER 1, GENERAL	AS NOTED BELOW
SECTION Z10	REV. 10, 06/20/11
SECTION 200	REV. 7, 06/16/08
SECTION 210	REV. 4, 06/10/09
CHAPTER 2, FIRE PROTECTION	REV. 3, 06/18/08
CHAPTER 3, CIVIL	REV. 2, 10/27/06
CHAPTER 4, ARCHITECTURAL	REV. 3, 10/27/06
CHAPTER 5, STRUCTURAL	REV. 6, 06/20/11
CHAPTER 6, MECHANICAL	AS NOTED BELOW
SECTIONS D10 + E10	REV. 3, 09/29/09
CHAPTER 7, ELECTRICAL	AS NOTED BELOW
SECTION D5000	REV. 8, 11/08/11
SECTION D5010	REV. 4, 11/08/11
SECTION D5020	REV. 4, 11/03/08
SECTION D5030	REV. 4, 09/28/09
SECTION D5090	REV. 4, 11/08/11
SECTION G4010	REV. 3, 08/20/10
SECTION G4020	REV. 3, 05/12/10
SECTION G4030	REV. 2, 10/27/06
SECTION G4090	REV. 2, 10/27/06
CHAPTER 8, I & C	AS NOTED BELOW
SECTION D3060/F1050	REV. 3, 10/27/06
APPENDICES	REV. 1, 10/27/06
CHAPTER 9, SECURITY	AS NOTED BELOW
SECTION F1033	REV. 2, 01/26/11
CHAPTER 10, HAZARDOUS PROCESS	AS NOTED BELOW
SECTION F1030.1	REV. 1, 10/27/06
CHAPTER 11, RADIATION PROTECTION	AS NOTED BELOW
SECTION F1030.2	REV. 1, 11/25/08
APPENDIX A	REV. 1, 10/27/06
CHAPTER 12, NUCLEAR	AS NOTED BELOW
SECTION F1030.7	REV. 2, 02/23/11
CHAPTER 13, WELDING, JOINING & NDE	CURRENT AS OF 08/11
CHAPTER 14, SUSTAINABLE DESIGN	REV. 7, 04/05/11
CHAPTER 15, COMMISSIONING	REV. 0, 03/03/10
CHAPTER 16, IBC PROGRAM	CURRENT AS OF 08/11
CHAPTER 17, PRESSURE SAFETY	AS NOTED BELOW
SECTION D20–B31.3–8	REV. 2, 03/10/09
CHAPTER 18, SECURE COMMUNICATIONS	REV. 0, 01/26/11

BLDG 230 C55864 LLW TREATMENT BUILDING LIST OF DRAWINGS

REVISION NUMBER	SHEET NUMBER	DISCIPLINE SHEET NUMBER	DRAWING TITLE
1	1	G–0001	TITLE SHEET, LOCATION PLAN & DRAWING LIST
1	2	G–0002	DRAWING LIST
1	3	G–0003	DRAWING LIST
1	4	G–0004	DRAWING LIST
0	5	G–0005	DRAWING LIST
0	6	C–0001	SYMBOL LEGEND
0	7	C–1000	SITE DEMOLITION PLAN
0	8	C–1001	SITE DEMOLITION PLAN
0	9	C–1002	SITE DEMOLITION PLAN
0	10	C–1003	SITE PLAN
0	11	C–1004	SITE PLAN
0	12	C–1005	SITE PLAN
0	13	C–1006	GRADING PLAN
0	14	C–1007	GRADING PLAN
0	15	C–1008	GRADING PLAN
0	16	C–1009	UTILITY PLAN
0	17	C–1010	UTILITY PLAN
0	18	C–1011	UTILITY PLAN
0	19	C–1012	UTILITY PLAN
0	20	C–1013	UTILITY PLAN
0	21	C–1014	UTILITY PLAN
0	22	C–1015	UTILITY PLAN
0	23	C–1016	FIRE LANE PLAN
0	24	C–1017	VEHICLE MOVEMENT PLAN
0	25	C–1018	FOUNDATION LOCATION PLAN
0	26	C–1019	FOUNDATION LOCATION PLAN
0	27	C–1020	FOUNDATION LOCATION LAYDOWN #1 PLAN
0	28	C–1021	FOUNDATION LOCATION LAYDOWN #2 PLAN
0	29	C–1022	FOUNDATION LOCATION PLAN
0	30	C–1023	BENCH MARK LOCATION PLAN
0	31	C–1024	EROSION CONTROL PLAN
0	32	C–1025	EROSION CONTROL LAYDOWN #1 AND #2 PLAN
0	33	C–1026	SANITARY SEWER FORCE MAIN PLAN AND PROFILE
0	34	C–1027	SANITARY SEWER FORCE MAIN PLAN AND PROFILE
0	35	C–1028	4" SANITARY SEWER SERVICE PLAN AND PROFILE
0	36	C–1029	24" STORM DRAIN PLAN AND PROFILE
0	37	C–1030	EAST STORAGE 24" STORM DRAIN PLAN AND PROFILE
0	38	C–1031	LLW–301–HDPE–3" PLAN AND PROFILE
0	39	C–1032	COMMUNICATION DUCTBANK PROFILE
0	40	C–1033	GAS LINE PLAN AND PROFILE
0	41	C–1034	MEDIUM VOLTAGE DUCTBANK PLAN AND PROFILE
0	42	C–1035	WATER LINE PLANS AND PROFILES
0	43	C–1036	WATER LINE PLANS AND PROFILES
0	44	C–1037	LLW–101–HDPE–1.5" INFLUENT PLAN AND PROFILE
0	45	C–1038	LLW–240–HDPE–8" PLAN AND PROFILE
0	46	C–1039	LLW–240–HDPE–8" PLAN AND PROFILE
0	47	C–1040	LLW–283–HDPE–1.5" PLAN AND PROFILE
0	48	C–1041	MEDIUM VOLTAGE DUCTBANK PLAN AND PROFILE
0	49	C–1042	2" DOMESTIC WATER PLAN AND PROFILE
0	50	C–1043	LOOP ROAD PLAN AND PROFILE
0	51	C–1044	LOOP ROAD PLAN AND PROFILE
0	52	C–1045	ROAD "B" PLAN AND PROFILE
0	53	C–4000	ENLARGED SITE PLAN
0	54	C–4001	ENLARGED SITE PLAN
0	55	C–5000	SITE DETAILS
0	56	C–5001	UTILITY DETAILS
0	57	C–5002	SANITARY SEWER LIFT STATION DETAILS
0	58	C–5003	TRANSFORMER PAD DETAIL
0	59	C–5004	MISCELLANEOUS UTILITY DETAILS
0	60	C–5005	MISCELLANEOUS DETAILS
0	61	C–5006	MISCELLANEOUS DETAILS
0	62	C–5007	MISCELLANEOUS DETAILS
0	63	C–5008	UTILITY TRENCH DETAILS
0	64	C–5009	EROSION CONTROL DETAILS

PRODUCT OPTIONS AND SUBSTITUTIONS

"OR APPROVED EQUAL" IS ALWAYS IMPLIED AFTER A BRAND NAME, PATENTED PROCESS OR CATALOG NUMBER. THE CONTRACTOR MAY SUBSTITUTE ANY BRAND OR PROCESS APPROVED AS AN EQUAL BY SPECIFYING ARCHITECT/ENGINEER. THE ONLY EXCEPTION IS WHERE "NO SUBSTITUTION" IS SPECIFIED. SEE GENERAL PROVISION "MATERIAL AND WORKMANSHIP."

NO	DATE	CLASS REV	ADC	DESCRIPTION	DRW	DES	CHKD	SUB	APP
1	7/7/14	U		CHANGED REVISION NUMBERS	MT	MT	MT	MT	

AECOM

RLWTF–UP LOW LEVEL WASTE SUBPROJECT

TITLE SHEET, LOCATION PLAN & DRAWING LIST

DRAWN V DAVISON
DESIGN S MOORE
CHECKED M TARIN
DATE 8/8/14

BLDG. 230 TA–50

SUBMITTED MANNY TARIN

APPROVED FOR RELEASE ED ARTIOLA

Los Alamos NATIONAL LABORATORY PO Box 1663 Los Alamos, New Mexico 87545

SHEET G–0001
1 OF 434

CLASSIFICATION REVIEWER DATE

PROJECT ID 100761

DRAWING NO C55864

REV 1

MANUEL TARIN, JR. NEW MEXICO 10741 PROFESSIONAL ENGINEER
7/7/2014

25521 : 1

File Location: W:\RLWTF LOW-LEVEL WASTE FACILITY\300 CAD\C55864 MAIN BUILDING\SHEETS\01 GEN\DWG\300864-G-0001-R1.DWG
Plotted By: DILLEDGE, ALAN Plot Date: Wednesday, July 02, 2014

LIST OF DRAWINGS CONTINUED

REVISION NUMBER	SHEET NUMBER	DISCIPLINE SHEET NUMBER	DRAWING TITLE
0	65	C-5010	NATURAL GAS REGULATOR STATION DETAILS
0	66	C-5011	EMBEDMENT PLATE DETAILS
1	67	C-5012	PIPE RACK SUPPORT DETAILS
0	68	C-7000	SITE COORDINATE TABLE
0	69	S-0001	ABBREVIATIONS & LEGEND
0	70	S-0002	GENERAL STRUCTURAL NOTES
0	71	S-1100	FOUNDATION PLAN
0	72	S-1101	ROOF FRAMING PLAN
0	73	S-2100	STRUCTURAL ELEVATIONS
0	74	S-2101	STRUCTURAL ELEVATIONS
0	75	S-3100	STRUCTURAL SECTIONS
0	76	S-3101	STRUCTURAL SECTIONS
0	77	S-4100	STAIR PLANS
0	78	S-5100	TYPICAL DETAILS
0	79	S-5101	TYPICAL DETAILS
0	80	S-5102	TYPICAL DETAILS
0	81	S-5110	FOUNDATION DETAILS
0	82	S-5120	FRAMING DETAILS
0	83	S-5121	FRAMING DETAILS
0	84	S-5122	FRAMING DETAILS
0	85	S-5123	FRAMING DETAILS
0	86	S-5124	FRAMING DETAILS
0	87	S-7100	STRUCTURAL SCHEDULES
0	88	S-7101	STRUCTURAL SCHEDULES
0	89	S-7102	STRUCTURAL SCHEDULES
0	90	A-0001	PROJECT DESIGN DATA
0	91	A-0002	SYMBOL LEGEND AND ABBREVIATIONS
0	92	A-1001	FLOOR PLAN OF RECORD
0	93	A-1002	ROOF PLAN OF RECORD
0	94	A-1100	LIFE SAFETY PLAN
0	95	A-1101	LIFE SAFETY OCCUPANCY LOAD PLAN
0	96	A-1150	FLOOR PLAN-NORTH
0	97	A-1151	FLOOR PLAN-SOUTH
0	98	A-1154	REFLECTED CEILING PLAN-NORTH
0	99	A-1155	REFLECTED CEILING PLAN-SOUTH
0	100	A-1156	ROOF PLAN-NORTH
0	101	A-1157	ROOF PLAN-SOUTH
0	102	A-2100	EXTERIOR ELEVATIONS - WEST, SOUTH
0	103	A-2101	EXTERIOR ELEVATIONS - NORTH, EAST
0	104	A-2102	RESTROOM ELEVATIONS
0	105	A-2103	INTERIOR ELEVATIONS
0	106	A-3100	BUILDING SECTIONS
0	107	A-3101	WALL SECTIONS
0	108	A-3102	WALL SECTIONS
0	109	A-4101	LARGE SCALE PLANS RESTROOMS
0	110	A-4102	LARGE SCALE PLANS WET LABORATORY
0	111	A-4103	LARGE SCALE PLANS NORTH STAIR
0	112	A-5100	DOOR AND WINDOW DETAILS
0	113	A-5101	DOOR AND WINDOW DETAILS
0	114	A-5102	ROOF DETAILS
0	115	A-5103	LADDER DETAILS
0	116	A-5104	RAILING DETAILS
0	117	A-5105	MISCELLANEOUS DETAILS
0	118	A-7100	DOOR AND WINDOW SCHEDULE
0	119	A-7101	ROOM FINISH SCHEDULE
0	120	A-7102	PARTITION TYPES SCHEDULE
0	121	Q-1101	PROCESS EQUIPMENT PLAN - NORTH
1	122	Q-1102	EMBEDMENT PLATE PLAN - NORTH
0	123	Q-4100	PROCESS BAY ENLARGED PLAN
0	124	Q-4101	PROCESS BAY ENLARGED PLAN
0	125	Q-4102	PROCESS BAY ENLARGED PLAN
1	126	Q-4103	PROCESS BAY ENLARGED PLAN
0	127	Q-5100	EMBEDMENT PLATE DETAILS
0	128	Q-5102	PIPE SUPPORT DETAILS
0	129	Q-5103	MOTOR CONTROL CENTER MOUNTING DETAILS
0	130	Q-5104	DRUM LOADING STATION DETAIL
0	131	Q-5105	DRUM LOADING STATION WELDMENT
0	132	Q-5106	DRUM LOADING STATION DETAILS
0	133	Q-5107	FILTER PRESS DRUM LOADING STATION DETAIL
0	134	Q-5108	FILTER PRESS DRUM LOADING STATION WELDMENT
0	135	Q-5109	FILTER PRESS DRUM LOADING STATION DETAIL
0	136	Q-5110	CHEMICAL STORAGE DRUM RESTRAINT FIXTURE
0	137	Q-5111	CHEMICAL STORAGE DRUM RESTRAINT FIXTURE
0	138	Q-7100	EQUIPMENT SCHEDULE
0	139	Q-7101	EQUIPMENT SCHEDULE
0	140	Q-7102	EQUIPMENT SCHEDULE
0	141	Q-7103	EQUIPMENT SCHEDULE
0	142	F-0101	FIRE PROTECTION ABBREVIATIONS & LEGEND SYMBOLS
0	143	F-1100	NORTH FIRE PROTECTION SYSTEM LAYOUT - PROCESS AREA
0	144	F-1101	SOUTH FIRE PROTECTION SYSTEM LAYOUT - WET LAB, SUPPORT AREA
0	145	F-1102	NORTH FIRE ALARM SYSTEM LAYOUT - PROCESS AREA
0	146	F-1103	SOUTH FIRE ALARM SYSTEM LAYOUT - WET LAB, SUPPORT AREA
0	147	F-3100	FIRE PROTECTION RISER ELEVATIONS
0	148	F-3101	FIRE PROTECTION SECTION VIEWS
0	149	F-4100	FIRE PROTECTION ENLARGED PLAN VIEW - FIRE RISER ROOM
0	150	F-5100	FIRE PROTECTION HANGER DETAILS
0	151	F-5101	FIRE PROTECTION HANGER AND SUPPORT DETAILS
0	152	F-6100	FIRE ALARM RISER DIAGRAM
0	153	F-6101	FIRE PROTECTION P&ID
0	154	F-7100	FIRE PROTECTION SCHEDULES
0	155	F-7101	FIRE ALARM INPUT/OUTPUT MATRIX
0	156	F-7102	FIRE PROTECTION SCHEDULES
0	157	F-7103	FIRE PROTECTION SCHEDULES
0	158	F-9100	FIRE PROTECTION SYSTEM ISO

LIST OF DRAWINGS CONTINUED

REVISION NUMBER	SHEET NUMBER	DISCIPLINE SHEET NUMBER	DRAWING TITLE
0	159	P-0001	SYMBOL LEGEND, ABBREVIATIONS AND GENERAL NOTES
0	160	P-0002	PIPING & INSTRUMENTATION DIAGRAM SYMBOL LEGEND
0	161	P-0003	PIPING & INSTRUMENTATION DIAGRAM SYMBOL LEGEND
0	162	P-1000	SITE PLAN
0	163	P-1100	POTABLE WATER PIPING PLAN - NORTH
0	164	P-1101	POTABLE WATER PIPING PLAN - SOUTH
0	165	P-1102	NON-POTABLE WATER PIPING PLAN - NORTH
0	166	P-1103	NON-POTABLE WATER PIPING PLAN - SOUTH
0	167	P-1104	VACUUM/COMPRESSED AIR PIPING PLAN - NORTH
0	168	P-1105	VACUUM/GAS PIPING PLAN - SOUTH
0	169	P-1106	PROCESS DRAIN/VENT PLAN - NORTH
0	170	P-1107	PROCESS DRAIN/VENT PLAN - SOUTH
0	171	P-1109	SANITARY WASTE/VENT PLUMBING PLAN - SOUTH
0	172	P-1110	ROOF DRAIN PLAN - NORTH
0	173	P-1111	ROOF DRAIN PLAN - SOUTH
0	174	P-1112	UTILITY PIPING PLAN
0	175	P-3100	SECTIONS
0	176	P-5000	FIRE STOPPING DETAILS
0	177	P-5001	DETAIL
0	178	P-5002	DETAILS
0	179	P-5003	DETAILS
0	180	P-5004	DETAILS
0	181	P-6001	PROCESS AND FIRE WATER DRAIN P&ID
0	182	P-6002	WET LAB NON-POTABLE WATER P&ID
0	183	P-6003	POTABLE WATER P&ID
0	184	P-6004	SEWER SYSTEM P&ID
0	185	P-6006	CAM AND FAS P&ID
0	186	P-6008	COMPRESSED AIR P&ID
0	187	P-6009	NON-POTABLE WATER P&ID
0	188	P-6010	WET LAB AREA SUMP P&ID
0	189	P-6100	POTABLE WATER FLOW DIAGRAM
0	190	P-6101	NON-POTABLE WATER FLOW DIAGRAM
1	191	P-6102	ARGON AND P-10 GAS SUPPLY P&ID
0	192	P-6103	VACUUM SYSTEM P&ID
0	193	P-6104	DEIONIZED WATER PROCESS FLOW DIAGRAM
0	194	P-7100	PLUMBING EQUIPMENT LIST
0	195	P-7101	PLUMBING EQUIPMENT LIST
1	196	P-7102	PLUMBING EQUIPMENT LIST
0	197	P-7103	PLUMBING EQUIPMENT LIST
0	198	P-7104	PLUMBING EQUIPMENT LIST
0	199	P-9101	POTABLE WATER RISER DIAGRAM
0	200	P-9102	NON-POTABLE WATER RISER DIAGRAM
0	201	P-9103	WASTE VENT RISER DIAGRAM
0	202	P-9104	ROOF DRAIN RISER DIAGRAM
0	203	P-9105	LAB WASTE WATER RISER DIAGRAM
0	204	D-0001	PROCESS P&ID SYMBOL LEGEND
0	205	D-0002	PROCESS P&ID SYMBOL LEGEND
0	206	D-1101	PROCESS PLAN - NORTH
0	207	D-1102	PROCESS PLAN - SOUTH
0	208	D-3100	PROCESS SECTION - NORTH
0	209	D-3101	PROCESS SECTION - NORTH
0	210	D-3102	PROCESS SECTION - SOUTH
0	211	D-3103	PROCESS SECTION - SOUTH
0	212	D-3104	PROCESS SECTION - EAST
0	213	D-3105	PROCESS SECTION - EAST
0	214	D-3106	PROCESS SECTION - WEST
0	215	D-3107	PROCESS SECTION - WEST
0	216	D-3108	PROCESS SECTIONS
0	217	D-3109	PROCESS SECTIONS
0	218	D-4100	PROCESS BAY ENLARGED PLAN
0	219	D-4101	PROCESS BAY ENLARGED PLAN
0	220	D-4102	PROCESS BAY ENLARGED PLAN
0	221	D-4103	PROCESS BAY ENLARGED PLAN
0	222	D-5100	PIPE PENETRATION DETAILS
0	223	D-5101	ALLOWABLE PIPE COMPONENT LOADS TABLE
0	224	D-5102	PIPE SUPPORT DETAILS
0	225	D-5103	PIPE SUPPORT DETAILS
0	226	D-5104	PIPE SUPPORT DETAILS
1	227	D-5105	PIPE SUPPORT DETAILS
0	228	D-6000	PROCESS FLOW DIAGRAM
0	229	D-6001	PROCESS STREAM TABLES
0	230	D-6002	PROCESS STREAM TABLES
0	231	D-6003	PROCESS STREAM TABLES
0	232	D-6010	INFLUENT FILTER SYSTEM ROUGHING FILTERS P&ID
1	233	D-6011	REACTION/PRECIPITATION SYSTEM MIXING CHAMBER P&ID
0	234	D-6012	REACTION/PRECIPITATION SYSTEM TK-1101 P&ID
1	235	D-6013	MICROFILTRATION SYSTEM TK-1102 P&ID
0	236	D-6014	MICROFILTRATION SYSTEM MICROFILTER P&ID
0	237	D-6015	MICROFILTRATION SYSTEM CLEAN-IN-PLACE SKID P&ID
0	238	D-6016	REVERSE OSMOSIS SYSTEM TK-1301 P&ID
0	239	D-6017	REVERSE OSMOSIS SYSTEM P-1302 P&ID
0	240	D-6018	REVERSE OSMOSIS SYSTEM REVERSE OSMOSIS UNIT P&ID
0	241	D-6019	REVERSE OSMOSIS SYSTEM TAC-4302 P&ID
0	242	D-6020	REVERSE OSMOSIS SYSTEM TK-1304 P&ID
0	243	D-6021	POLISHING SYSTEM PUMP AND FLT-1401 P&ID
0	244	D-6022	POLISHING SYSTEM FLT-1403 AND FLT-1405 P&ID
0	245	D-6023	SOLIDS COLLECTION & CONCENTRATION SYSTEM TK-1707 AND PUMP P&ID
0	246	D-6024	SOLIDS COLLECTION & CONCENTRATION SYSTEM ROTARY FILTER P&ID
0	247	D-6025	SOLIDS COLLECTION & CONCENTRATION SYSTEM TK-1702 AND PUMP P&ID
0	248	D-6026	SOLIDS COLLECTION & CONCENTRATION SYSTEM TK-1704 AND PUMP P&ID
0	249	D-6027	SOLIDS COLLECTION & CONCENTRATION SYSTEM TK-1703 AND PUMP P&ID
0	250	D-6028	DE-WATERING SYSTEM TK-1705 AND PUMP P&ID
0	251	D-6029	DE-WATERING SYSTEM EVAP-1701, EVAP-1702 P&ID

GENERAL NOTES

1. DRAWING NUMBER 55864 REFERS TO BUILDING 230, LLW TREATMENT BUILDING. DRAWING NUMBER 55865 REFERS TO BUILDING 251, LLW UTILITY BUILDING. DRAWING NUMBER 55866 REFERS TO BUILDING 252, LLW DRUM STORAGE AREA. DRAWING NUMBER 55867 REFERS TO BUILDING 261, LLW EFFLUENT STORAGE TANK AREA.

MANUEL TARIN, JR. NEW MEXICO 10761 PROFESSIONAL ENGINEER
7/7/2014

NO	DATE	CLASS REV	ADC	DESCRIPTION	DWN	DES	CHKD	SUB	APP
1	7/7/14	U		CHANGED REVISION NUMBERS	MT	MT	MT	MT	

AECOM

RLWTF-UP LOW LEVEL WASTE SUBPROJECT

DRAWING LIST

DRAWN	V DAVISON
DESIGN	S MOORE
CHECKED	M TARIN
DATE	8/8/14

BLDG. 230 TA-50

SUBMITTED: MANNY TARIN

APPROVED FOR RELEASE: ED ARTIOLA

Los Alamos NATIONAL LABORATORY — PO Box 1663, Los Alamos, New Mexico 87545

SHEET: G-0002

2 OF 434

CLASSIFICATION | REVIEWER | DATE

PROJECT ID: 100761

DRAWING NO: C55864

REV: 1

File Location: W:\LLW\LLWTF LOW-LEVEL WASTE FACILITY\000 CAD\C55864 MAIN BUILDING\SHEETS\01 GENERAL\X55864-G-0002-R1.DWG
Plotted By: DILLEENS, ALAN Plot Date: Thursday, July 03, 2014
C55021

LIST OF DRAWINGS CONTINUED

REVISION NUMBER	SHEET NUMBER	DISCIPLINE SHEET NUMBER	DRAWING TITLE
0	252	D-6030	DE-WATERING SYSTEM TK-1708 AND PUMP P&ID
0	253	D-6031	PROCESS SYSTEM SEQUENCE OF OPERATIONS
0	254	D-6032	PROCESS SYSTEM SEQUENCE OF OPERATIONS
0	255	D-6035	MFV AND ISOLOK SAMPLER DIAGRAM
0	256	M-0001	MECHANICAL SYMBOL LEGEND AND GENERAL NOTES
0	257	M-0002	PROCESS FLOW DIAGRAM AND P&ID SYMBOL LEGEND
0	258	M-0003	PROCESS FLOW DIAGRAM AND P&ID LEGEND
0	259	M-1000	MECHANICAL SITE PIPING PLAN
0	260	M-1100	ZONE PRESSURE PLAN
1	261	M-1101	HVAC PLAN - NORTH
1	262	M-1102	HVAC PLAN - SOUTH
1	263	M-1103	ROOF HVAC PLAN - NORTH
1	264	M-1104	ROOF HVAC PLAN - SOUTH
1	265	M-1105	MECHANICAL PIPING PLAN - NORTH
1	266	M-1106	MECHANICAL PIPING PLAN - SOUTH
1	267	M-1107	MECHANICAL PLAN - EXTERIOR
0	268	M-2100	EXHAUST FAN ELEVATION
0	269	M-2101	STACK ELEVATION
0	270	M-3100	HVAC SECTIONS
0	271	M-3101	HVAC SECTIONS
0	272	M-3102	HVAC SECTIONS
0	273	M-3103	HVAC SECTIONS
0	274	M-3104	HVAC SECTIONS
1	275	M-3105	HVAC SECTIONS
0	276	M-3106	HVAC SECTIONS
0	277	M-3107	HVAC SECTIONS
0	278	M-4100	HVAC ENLARGED PLAN
0	279	M-5000	MECHANICAL DETAILS
0	280	M-5001	MECHANICAL COIL PIPING DETAILS
0	281	M-5002	MECHANICAL COIL PIPING DETAILS
0	282	M-5003	MECHANICAL DETAILS
0	283	M-5004	MECHANICAL DETAILS
0	284	M-5005	STACK DETAIL
0	285	M-5006	STACK DETAIL
1	286	M-6000	HEATING WATER FLOW DIAGRAM
1	287	M-6001	ENERGY RECOVERY LOOP FLOW DIAGRAM
1	288	M-6002	CHILLED WATER FLOW DIAGRAM
0	289	M-6100	PROCESS-LABORATORY AREA HVAC FLOW DIAGRAM
0	290	M-6101	SUPPORT AREA HVAC FLOW DIAGRAM
1	291	M-6102	SUPPORT AREA VENTILATION SUPPLY P&ID
1	292	M-6103	PROCESS AREA VENTILATION SUPPLY P&ID
0	293	M-6104	LABORATORY AREA VENTILATION SUPPLY AND EXHAUST P&ID
0	294	M-6105	EXHAUST VENTILATION P&ID
0	295	M-6106	STACK AIR SAMPLING P&ID
1	296	M-6107	HVAC SEQUENCE OF OPERATIONS
0	297	M-6108	HVAC SEQUENCE OF OPERATIONS
0	298	M-6109	HVAC SEQUENCE OF OPERATIONS
0	299	M-6110	HVAC SEQUENCE OF OPERATIONS
0	300	M-6111	HVAC SEQUENCE OF OPERATIONS
0	301	M-7000	MECHANICAL EQUIPMENT LIST
0	302	M-7001	MECHANICAL EQUIPMENT LIST
0	303	M-7002	MECHANICAL EQUIPMENT LIST
0	304	M-7003	MECHANICAL EQUIPMENT LIST
0	305	M-7004	MECHANICAL EQUIPMENT LIST
0	306	M-7005	MECHANICAL EQUIPMENT LIST
0	307	M-7006	MECHANICAL EQUIPMENT LIST
0	308	E-0001	SYMBOL LEGEND AND ABBREVIATIONS
0	309	E-1000	COMBINED ELECTRICAL UTILITIES SITE PLAN - NORTH
0	310	E-1001	COMBINED ELECTRICAL UTILITIES SITE PLAN - SOUTH
0	311	E-1002	EXTERIOR LIGHTING PLAN
0	312	E-1003	EXTERIOR GROUNDING PLAN
0	313	E-1004	EXTERIOR POWER PLAN
0	314	E-1101	NORTH POWER PLAN - PROCESS AREA
0	315	E-1102	SOUTH POWER PLAN - WET LAB, SUPPORT AREA
0	316	E-1103	NORTH LIGHTING PLAN - PROCESS AREA
0	317	E-1104	SOUTH LIGHTING PLAN - WET LAB, SUPPORT AREA
0	318	E-1105	GROUNDING PLAN
0	319	E-1106	LIGHTNING PROTECTION PLAN
0	320	E-1107	NORTH RECEPTACLE PLAN - PROCESS AREA
0	321	E-1108	SOUTH RECEPTACLE PLAN - WET LAB, SUPPORT AREA
0	322	E-1109	CONDUIT PLAN - NORTH
0	323	E-1110	CONDUIT PLAN - SOUTH
0	324	E-1111	RADIATION MONITORING PLAN PROCESS AREA - NORTH
0	325	E-1112	RADIATION MONITORING PLAN - SOUTH
0	326	E-1130	I&C CONDUIT PLAN - PROCESS AREA
0	327	E-1131	I&C CONDUIT PLAN - WET LAB, SUPPORT AREA
0	328	E-3100	MCC SECTIONS
0	329	E-3101	ELECTRICAL SECTIONS
0	330	E-4000	ENLARGED HEAT TRACE AND CONDUIT PLAN - NORTH
0	331	E-4001	ENLARGED HEAT TRACE PLAN - SOUTH
1	332	E-4100	ENLARGED ELECTRICAL ROOM PLAN
0	333	E-4101	ENLARGED OPERATIONS CENTER PLAN
0	334	E-4102	ENLARGED ROOF PLAN - SOUTH
0	335	E-5001	MANHOLE DETAILS
0	336	E-5004	LIGHTNING PROTECTION MAST DETAIL
0	337	E-5100	INSTALLATION DETAILS
0	338	E-5101	GROUNDING DETAILS
0	339	E-5102	CONTINUOUS AIR MONITOR MOUNTING DETAILS
0	340	E-5104	ELECTRICAL DETAILS
0	341	E-5105	HEAT TRACE DETAILS
0	342	E-5106	HEAT TRACE DETAILS
0	343	E-5108	PANEL INSTALLATION DETAILS
1	344	E-5109	DETAILS
0	345	E-5110A	CAB-101 PANEL LAYOUT
0	346	E-5110B	CAB-101 PANEL LAYOUT
0	347	E-5111A	CAB-102 PANEL LAYOUT
0	348	E-5111B	CAB-102 PANEL LAYOUT
0	349	E-5115	WB-101 PANEL LAYOUT
0	350	E-5116	WB-102 PANEL LAYOUT
0	351	E-5117	WB-103 PANEL LAYOUT
0	352	E-5118	WB-104 PANEL LAYOUT
0	353	E-5119	WB-105 PANEL LAYOUT
0	354	E-5120	WB-106 PANEL LAYOUT
0	355	E-5121	WB-107 PANEL LAYOUT
0	356	E-5129A	CAB-100 PANEL LAYOUT
0	357	E-5129B	CAB-100 PANEL LAYOUT
0	358	E-6000	RISER BLOCK DIAGRAM
0	359	E-6001	ONE-LINE DIAGRAM
0	360	E-6100	MCC-A ONE-LINE DIAGRAM
0	361	E-6101	MCC-B ONE-LINE DIAGRAM
0	362	E-6102	GROUNDING SYSTEM DIAGRAM
0	363	E-6103	RADIATION MONITORING SYSTEM WIRING DIAGRAM
0	364	E-6104	DRAIN SOLENOID ACTIVATION DIAGRAM
0	365	E-6105	HEAR TRACE WIRING DIAGRAM
0	366	E-6110	MOTOR CONTROL DIAGRAMS
0	367	E-6111	MOTOR CONTROL DIAGRAMS
0	368	E-6112	MOTOR CONTROL DIAGRAMS
0	369	E-6113	MOTOR CONTROL DIAGRAMS
0	370	E-6120	MOTOR CONTROL DIAGRAMS
0	371	E-6121	MOTOR CONTROL DIAGRAMS
0	372	E-6130	REMOTE STARTER MOTOR CONTROL DIAGRAM
0	373	E-6131	REMOTE STARTER MOTOR CONTROL DIAGRAM
0	374	E-6140	CONTROL SYSTEM BLOCK DIAGRAM
0	375	E-6141	LLW PROCESS CONTROL LOGIC DIAGRAM
0	376	E-6149	CAB-100 NODE 3 I/O MODULE DISTRIBUTION
0	377	E-6150	CAB-101 NODE 1 I/O MODULE DISTRIBUTION
0	378	E-6151	CAB-102 NODE 5 I/O MODULE DISTRIBUTION
0	379	E-6155	WB-101 PANEL TERMINATION
0	380	E-6156	WB-102 PANEL TERMINATION
0	381	E-6157	WB-103 PANEL TERMINATION
0	382	E-6158	WB-104 PANEL TERMINATION
0	383	E-6159	WB-105 PANEL TERMINATION
0	384	E-6160	WB-106 PANEL TERMINATION
0	385	E-6161A	WB-107 PANEL TERMINATION
0	386	E-6161B	WB-107 PANEL TERMINATION
0	387	E-6165A	CAB-100 PANEL TERMINATION
0	388	E-6165B	CAB-100 PANEL TERMINATION
0	389	E-6165C	CAB-100 PANEL TERMINATION
0	390	E-6166A	CAB-101 PANEL TERMINATION
0	391	E-6166B	CAB-101 PANEL TERMINATION
0	392	E-6166C	CAB-101 PANEL TERMINATION
0	393	E-6166D	CAB-101 PANEL TERMINATION
0	394	E-6166E	CAB-101 PANEL TERMINATION
0	395	E-6166F	CAB-101 PANEL TERMINATION
0	396	E-6166G	CAB-101 PANEL TERMINATION
0	397	E-6166H	CAB-101 PANEL TERMINATION
0	398	E-6167A	CAB-102 PANEL TERMINATION
0	399	E-6167B	CAB-102 PANEL TERMINATION
0	400	E-6167C	CAB-102 PANEL TERMINATION
0	401	E-6167D	CAB-102 PANEL TERMINATION
0	402	E-6167E	CAB-102 PANEL TERMINATION
0	403	E-6167F	CAB-102 PANEL TERMINATION
0	404	E-6167G	CAB-102 PANEL TERMINATION
0	405	E-6167H	CAB-102 PANEL TERMINATION
0	406	E-6167J	CAB-102 PANEL TERMINATION
0	407	E-6167K	CAB-102 PANEL TERMINATION
0	408	E-6171	CAB-101 INSTRUMENT ELECTRICAL DISTRIBUTION
0	409	E-6172	CAB-102 INSTRUMENT ELECTRICAL DISTRIBUTION
0	410	E-6176	CAB-100 INSTRUMENT ELECTRICAL DISTRIBUTION
0	411	E-7100	PANEL SCHEDULES
0	412	E-7101	PANEL SCHEDULES
0	413	E-7102	PANEL SCHEDULES
0	414	E-7103	LUMINAIRE SCHEDULE
0	415	E-7104	EQUIPMENT NAMEPLATE SCHEDULES
0	416	E-7105	EQUIPMENT NAMEPLATE SCHEDULES
0	417	E-7106	EQUIPMENT NAMEPLATE SCHEDULES
0	418	E-7107	CONDUIT AND WIRE SCHEDULES
0	419	E-7108	CONDUIT AND WIRE SCHEDULES
0	420	E-7109	CONDUIT AND WIRE SCHEDULES
0	421	E-7110	CONDUIT AND WIRE SCHEDULES
0	422	E-7120	CABLE SCHEDULES
0	423	E-7121	CABLE SCHEDULES
0	424	T-0001	SYMBOL LEGEND AND ABBREVIATIONS
0	425	T-1100	TELECOMMUNICATION AND PAGING PLAN - NORTH
0	426	T-1101	TELECOMMUNICATION AND PAGING PLAN - SOUTH
0	427	T-4100	COMM ROOM ENLARGED PLAN
0	428	T-5100	PAGING SYSTEM TERMINAL BOX DETAIL
0	429	T-5101	DETAILS
0	430	T-6100	RISER DIAGRAM
0	431	T-6101	PAGING SYSTEM WIRING DIAGRAM
0	432	X-0001	ACCESS CONTROL SYMBOL LEGEND
0	433	X-1101	ACCESS CONTROL SYSTEM PLAN - SOUTH
0	434	X-5100	ACCESS CONTROL DETAILS

GENERAL NOTES

1. DRAWING NUMBER 55864 REFERS TO BUILDING 230, LLW TREATMENT BUILDING. DRAWING NUMBER 55865 REFERS TO BUILDING 251, LLW UTILITY BUILDING. DRAWING NUMBER 55866 REFERS TO BUILDING 252, LLW DRUM STORAGE AREA. DRAWING NUMBER 55867 REFERS TO BUILDING 261, LLW EFFLUENT STORAGE TANK AREA.

NO	DATE	CLASS REV	ADC	DESCRIPTION	DWN	DES	CHKD	SUB	APP
1	7/7/14	U		CHANGED REVISION NUMBERS	AT	AT	MT	MT	

AECOM

RLWTF-UP LOW LEVEL WASTE SUBPROJECT

DRAWING LIST

DRAWN: V DAVISON
DESIGN: S MOORE
CHECKED: M TARIN
DATE: 5/6/14

BLDG. 230 TA-50

SUBMITTED: MANNY TARIN
APPROVED FOR RELEASE: ED ARTIOLA

Los Alamos NATIONAL LABORATORY PO Box 1663 Los Alamos, New Mexico 87545

SHEET: G-0003
3 OF 434

CLASSIFICATION | REVIEWER | DATE

PROJECT ID: 100761
DRAWING NO: C55864
REV: 1

STATE OF NEW MEXICO Richard W. Kasslow 7-7-14 NO. 2840 REGISTERED ARCHITECT

File Location: W:\RLWTF LOW-LEVEL WASTE FACILITY\300 CAD\C55864 MAIN BUILDING\SHEETS\01 GENERAL\55864-G-0003-R1.DWG
Plotted by: ERICSMAN, DARLENE Plot Date: Monday, July 07, 2014

155021

BLDG 251 C55865
LLW UTILITY BUILDING
LIST OF DRAWINGS

REVISION NUMBER	SHEET NUMBER	DISCIPLINE SHEET NUMBER	DRAWING TITLE
1	1	S-1200	FOUNDATION PLAN
1	2	S-1201	ROOF FRAMING PLAN
1	3	S-2200	STRUCTURAL ELEVATIONS
1	4	S-2201	STRUCTURAL ELEVATIONS
0	5	S-3200	STRUCTURAL SECTIONS
0	6	S-5200	TYPICAL DETAILS
0	7	S-5201	TYPICAL DETAILS
0	8	S-5210	FOUNDATION DETAILS
0	9	S-5220	FRAMING DETAILS
0	10	S-5221	FRAMING DETAILS
0	11	S-7200	STRUCTURAL SCHEDULES
1	12	S-7201	STRUCTURAL SCHEDULES
0	13	A-0201	PROJECT DESIGN DATA
0	14	A-0202	LEGEND AND ABBREVIATIONS
1	15	A-1200	LIFE SAFETY PLAN
1	16	A-1201	FLOOR PLAN OF RECORD
0	17	A-1202	ROOF PLAN OF RECORD
1	18	A-1250	FLOOR PLAN
0	19	A-1252	ROOF PLAN
1	20	A-2200	BUILDING ELEVATIONS
0	21	A-3200	BUILDING SECTIONS
0	22	A-5200	DETAILS
1	23	A-7200	SCHEDULES
1	24	Q-1200	EQUIPMENT PLAN
0	25	Q-1201	EQUIPMENT PLAN
1	26	Q-1202	EMBEDMENT PLATE PLAN
0	27	Q-1203	EMBEDMENT PLATE PLAN
0	28	Q-5200	EMBEDMENT PLATE DETAILS
0	29	Q-5201	MOTOR CONTROL CENTER MOUNTING DETAILS
0	30	F-0201	FIRE PROTECTION ABBREVIATIONS AND SYMBOLS
0	31	F-1200	FIRE PROTECTION SYSTEM PLAN
0	32	F-1201	FIRE ALARM SYSTEM PLAN
0	33	F-3200	FIRE PROTECTION SECTIONS
0	34	F-5200	FIRE PROTECTION SYSTEM INSTALLATION DETAILS
0	35	F-5201	FIRE PROTECTION SYSTEM HANGER DETAILS
0	36	F-6200	FIRE PROTECTION P&ID
0	37	F-7200	FIRE PROTECTION SCHEDULES
0	38	F-8200	FIRE PROTECTION ISO
0	39	P-0201	SYMBOL LEGEND, ABBREVIATIONS AND GENERAL NOTES
0	40	P-0202	PIPING & INSTRUMENTATION DIAGRAM SYMBOL LEGEND
0	41	P-0203	PIPING & INSTRUMENTATION DIAGRAM SYMBOL LEGEND
1	42	P-1200	PIPING PLAN
1	43	P-1201	POTABLE WATER PIPING PLAN
1	44	P-1202	NON-POTABLE WATER PIPING PLAN
1	45	P-1203	GAS PIPING PLAN
1	46	P-1204	COMPRESSED AIR PLAN
1	47	P-1205	CONDENSATE WASTE/DRAIN PLAN
0	48	P-1206	UTILITY PIPING PLAN
0	49	P-3200	PLUMBING SECTION
0	50	P-3201	PLUMBING SECTION
0	51	P-3202	PLUMBING SECTION
0	52	P-3203	PLUMBING SECTION
0	53	P-5200	DETAILS
1	54	P-6200	NATURAL GAS P&ID
0	55	P-6201	POTABLE & NON-POTABLE WATER P&ID
0	56	P-6202	COMPRESSED AIR P&ID
0	57	P-6203	POTABLE & NON-POTABLE WATER FLOW DIAGRAM
0	58	P-6204	POTABLE/NON-POTABLE WATER RISER DIAGRAM
0	59	P-7200	PLUMBING EQUIPMENT LIST
0	60	P-7201	PLUMBING EQUIPMENT LIST
0	61	M-0201	MECHANICAL SYMBOL LEGEND AND GENERAL NOTES
0	62	M-0202	PROCESS FLOW DIAGRAM AND P&ID SYMBOL LEGEND
0	63	M-0203	PROCESS FLOW DIAGRAM AND P&ID LEGEND
1	64	M-1200	HVAC PLAN
1	65	M-1201	MECHANICAL PIPING PLAN
0	66	M-1202	CHILLER PIPING PLAN
0	67	M-1203	MECHANICAL FACILITY PIPING PLAN
0	68	M-3200	SECTION
0	69	M-3201	SECTION
0	70	M-3202	SECTION
0	71	M-3203	CHILLER SECTIONS
0	72	M-5201	MECHANICAL DETAILS
0	73	M-5202	MECHANICAL DETAILS
0	74	M-6200	AIR FLOW DIAGRAM
0	75	M-6201	SEQUENCE OF OPERATIONS
0	76	M-6203	CHILLED WATER SYSTEM P&ID
1	77	M-6204	PROCESS COOLING WATER SYSTEM P&ID
0	78	M-6205	HEATING WATER SYSTEM P&ID
0	79	M-6208	CHILLED WATER SYSTEM SEQUENCE OF OPERATIONS
0	80	M-6207	CHILLED WATER SYSTEM SEQUENCE OF OPERATIONS
0	81	M-6208	HEATING WATER SYSTEM SEQUENCE OF OPERATIONS
0	82	M-6209	HEATING WATER SYSTEM SEQUENCE OF OPERATIONS
0	83	M-9201	HEATING WATER SYSTEM RISER DIAGRAM
0	84	M-9202	CHILLED WATER SYSTEM RISER DIAGRAM
0	85	M-9203	PROCESS COOLING WATER SYSTEM RISER DIAGRAM

LIST OF DRAWINGS CONTINUED

REVISION NUMBER	SHEET NUMBER	DISCIPLINE SHEET NUMBER	DRAWING TITLE
0	86	E-0201	SYMBOL LEGEND AND ABBREVIATIONS
1	87	E-1200	POWER PLAN
1	88	E-1201	LIGHTING PLAN
1	89	E-1202	GROUNDING PLAN
1	90	E-1203	RECEPTACLE PLAN
1	91	E-1204	CONDUIT PLAN
1	92	E-1210	I&C CONDUIT PLAN
0	93	E-3200	ELECTRICAL SECTIONS
0	94	E-5201	INSTALLATION DETAILS
0	95	E-5202	PJB-11 PANEL LAYOUT
0	96	E-5203	PJB-12 PANEL LAYOUT
0	97	E-5204	PJB-10 PANEL LAYOUT
0	98	E-5208	LIGHTING DETAILS
0	99	E-5210A	CAB-103 PANEL LAYOUT
0	100	E-5210B	CAB-103 PANEL LAYOUT
0	101	E-6152	CAB-103 NODE 7 I/O MODULE DISTRIBUTION
0	102	E-6188A	CAB-103 PANEL TERMINATION
0	103	E-6188B	CAB-103 PANEL TERMINATION
0	104	E-6200	PP-C ONE-LINE DIAGRAM
0	105	E-6201	GROUNDING SYSTEM DIAGRAM
0	106	E-6202	MCC-C ONE-LINE DIAGRAM
0	107	E-6213	CAB-103 INSTRUMENT ELECTRICAL DISTRIBUTION
0	108	E-6220	MOTOR CONTROL DIAGRAMS
0	109	E-6221	MOTOR CONTROL DIAGRAMS
0	110	E-6222	MOTOR CONTROL DIAGRAMS
0	111	E-6223	MOTOR CONTROL DIAGRAMS
0	112	E-7200	PANEL SCHEDULES
0	113	E-7201	EQUIPMENT NAMEPLATE SCHEDULES
0	114	E-7202	EQUIPMENT NAMEPLATE
0	115	E-7203	CONDUIT AND WIRE SCHEDULE
0	116	T-0201	SYMBOL LEGEND AND ABBREVIATIONS
1	117	T-1200	TELECOMMUNICATIONS AND PAGING PLAN
0	118	T-6200	RISER DIAGRAM

BLDG 252 C55866
LLW DRUM STORAGE AREA
LIST OF DRAWINGS

REVISION NUMBER	SHEET NUMBER	DISCIPLINE SHEET NUMBER	DRAWING TITLE
0	1	C-0300	SYMBOL LEGEND
0	2	C-5300	DRUM STORAGE FENCE DETAILS
0	3	S-1300	FOUNDATION PLAN
0	4	S-3300	STRUCTURAL SECTIONS
0	5	S-5300	TYPICAL DETAILS
0	6	S-7300	STRUCTURAL SCHEDULES

BLDG 261 C55867
LLW EFFLUENT STORAGE TANK AREA
LIST OF DRAWINGS

REVISION NUMBER	SHEET NUMBER	DISCIPLINE SHEET NUMBER	DRAWING TITLE
0	1	S-1400	FOUNDATION PLAN
0	2	S-1401	FRAMING PLAN
0	3	S-2400	STRUCTURAL ELEVATIONS
0	4	S-2401	STRUCTURAL ELEVATIONS
0	5	S-3400	STRUCTURAL SECTIONS
0	6	S-3401	STRUCTURAL SECTIONS
0	7	S-5400	TYPICAL DETAILS
0	8	S-5401	TYPICAL DETAILS
0	9	S-5410	FOUNDATION DETAILS
0	10	S-5420	FRAMING DETAILS
0	11	S-7400	STRUCTURAL SCHEDULES
0	12	A-0401	PROJECT DESIGN DATA
0	13	A-0402	SYMBOL LEGEND AND ABBREVIATIONS
0	14	A-1401	FLOOR PLAN OF RECORD
0	15	A-1402	ROOF PLAN OF RECORD
0	16	A-1450	FLOOR PLAN
0	17	A-1451	ROOF PLAN
0	18	A-2400	ELEVATIONS
0	19	A-3400	BUILDING SECTIONS
0	20	A-5400	DETAILS
0	21	A-7400	ROOM FINISH SCHEDULE DOOR AND FRAME SCHEDULE
0	22	Q-1400	EQUIPMENT FLOOR PLAN
0	23	Q-1401	EMBEDMENT PLATE PLAN
0	24	Q-5400	EMBEDMENT PLATE DETAILS
0	25	Q-7400	EQUIPMENT SCHEDULE

GENERAL NOTES

1. DRAWING NUMBER 55864 REFERS TO BUILDING 230, LLW TREATMENT BUILDING. DRAWING NUMBER 55865 REFERS TO BUILDING 251, LLW UTILITY BUILDING. DRAWING NUMBER 55866 REFERS TO BUILDING 252, LLW DRUM STORAGE AREA. DRAWING NUMBER 55867 REFERS TO BUILDING 261, LLW EFFLUENT STORAGE TANK AREA.

MANUEL TARIN 10741 REGISTERED PROFESSIONAL ENGINEER
7/7/2014

NO	DATE	CLASS REV	ADC	DESCRIPTION	DRW	DES	CHKD	SUB	APP
1	7/7/14	U		CHANGED REVISION NUMBERS	MT	MT	MT	MT	

AECOM

RLWTF-UP LOW LEVEL WASTE SUBPROJECT

DRAWING LIST

DRAWN: V DAVISON
DESIGN: S MOORE
CHECKED: M TARIN
DATE: 6/16/14

BLDG. 230 TA-50

SUBMITTED: MANNY TARIN
APPROVED FOR RELEASE: ED ARTIOLA

Los Alamos NATIONAL LABORATORY PO Box 1663 Los Alamos, New Mexico 87545

SHEET G-0004
4 OF 434

CLASSIFICATION | REVIEWER | DATE

PROJECT ID: 100761
DRAWING NO: C55864
REV: 1

55021

File Location: W:\RLWTF LOW-LEVEL WASTE FACILITY\300 DATA\C55864 MAIN BUILDING\SHEETS\01 GENERAL\55864-G-0004-R1.DWG
Plotted By: DAVISON, ALAN Plot Date: Thursday, July 03, 2014

LIST OF DRAWINGS CONTINUED

REVISION NUMBER	SHEET NUMBER	DISCIPLINE SHEET NUMBER	DRAWING TITLE
0	26	P-0401	SYMBOL LEGEND, ABBREVIATIONS AND GENERAL NOTES
0	27	P-1400	PLUMBING PLAN
0	28	P-3400	PLUMBING SECTION
0	29	P-5400	DETAIL
0	30	P-6400	PLUMBING P&ID
0	31	P-7400	PLUMBING EQUIPMENT LIST
0	32	D-0401	PROCESS P&ID SYMBOL LEGEND
0	33	D-0402	PROCESS P&ID SYMBOL LEGEND
0	34	D-1400	PROCESS FLOOR PLAN
0	35	D-3410	PROCESS SECTION
0	36	D-3411	PROCESS SECTION
0	37	D-3412	PROCESS SECTION
0	38	D-3413	PROCESS SECTION
0	39	D-5400	DETAILS
0	40	D-5401	DETAILS
0	41	D-6410	EFFLUENT STORAGE SYSTEM TK-1501 P&ID
0	42	D-6411	EFFLUENT STORAGE SYSTEM TK-1502 AND PUMP P&ID
0	43	D-6412	EFFLUENT STORAGE SYSTEM SAMPLE - pH ADJUSTMENT P&ID
0	44	M-0401	MECHANICAL SYMBOL LEGEND AND GENERAL NOTES
0	45	M-0402	PROCESS FLOW DIAGRAM AND P&ID SYMBOL LEGEND
0	46	M-0403	PROCESS FLOW DIAGRAM AND P&ID SYMBOL LEGEND
0	47	M-1400	HVAC PLAN
0	48	M-3400	HVAC SECTION
0	49	M-6400	AIR FLOW DIAGRAM AND SEQUENCE OF OPERATIONS
0	50	E-0401	SYMBOL LEGEND AND ABBREVIATIONS
0	51	E-1400	POWER PLAN
0	52	E-1401	GROUNDING PLAN
0	53	E-1402	LIGHTING PLAN
0	54	E-1403	EFFLUENT TANK HEAT TRACE PLAN
0	55	E-1404	I&C CONDUIT PLAN
0	56	E-1405	RECEPTACLE PLAN
0	57	E-5401	HEAT TRACE DETAILS
0	58	E-5413A	CAB-104 PANEL LAYOUT
0	59	E-5413B	CAB-104 PANEL LAYOUT
0	60	E-6402	MOTOR CONTROL DIAGRAMS
0	61	E-6403	IMMERSION HEATER WIRING DIAGRAM
0	62	E-6410	CAB-104 INSTRUMENT ELECTRICAL DISTRIBUTION
0	63	E-6453	CAB-104 NODE 8 I/O MODULE DISTRIBUTION
0	64	E-6469A	CAB-104 PANEL TERMINATION
0	65	E-6469B	CAB-104 PANEL TERMINATION
0	66	E-6469C	CAB-104 PANEL TERMINATION
0	67	E-6469D	CAB-104 PANEL TERMINATION
0	68	T-0401	SYMBOL LEGEND AND ABBREVIATIONS
0	69	T-1400	TELECOMMUNICATIONS PLAN

GENERAL NOTES

1. DRAWING NUMBER 55864 REFERS TO BUILDING 230, LLW TREATMENT BUILDING. DRAWING NUMBER 55865 REFERS TO BUILDING 251, LLW UTILITY BUILDING. DRAWING NUMBER 55866 REFERS TO BUILDING 252, LLW DRUM STORAGE AREA. DRAWING NUMBER 55867 REFERS TO BUILDING 261, LLW EFFLUENT STORAGE TANK AREA.

NO	DATE	CLASS REV	ADC	DESCRIPTION	DWN	DES	CHKD	SUB	APP

AECOM

RLWTF-UP LOW LEVEL WASTE SUBPROJECT

DRAWING LIST

BLDG. 230 TA-50

DRAWN	V DAVISON
DESIGN	S MOORE
CHECKED	M TARIN
DATE	5/8/14

SUBMITTED: MANNY TARIN

APPROVED FOR RELEASE: ED ARTIOLIA

Los Alamos NATIONAL LABORATORY, PO Box 1663, Los Alamos, New Mexico 87545

SHEET G-0005

5 OF 434

CLASSIFICATION | REVIEWER | DATE

PROJECT ID 100761 | DRAWING NO C55864 | REV 0

MANUEL TARIN III, NEW MEXICO, 16741, PROFESSIONAL ENGINEER

5/8/2014

File Location: P:_TECHNOLOGY\60239531 - RLWTF\400 STUDIES, DESIGN\460 DESIGN SUBMISSIONS\461 CONCEPT DESIGN\DEL IX_5-6-14 FINAL\DEL IX DRAWINGS\230-LLW TREATMENT BUILDING\BLDG 230 CAD FILES\230-GENERAL\55864-G-0005-RELDWG

Plotted By: BRIEDMAN, DARLENE; Plot Date: Monday, May 19, 2014

: 12056

CIVIL LEGEND

(NOT ALL SYMBOLS WILL APPLY TO THIS PROJECT)

FILE NO.	SYMBOL	DESCRIPTION
		PROPERTY LINE INDICATOR
		SURFACE DRAINAGE
	EL	EXISTING CONTOUR
	EL	FINISHED CONTOUR
		UNDISTURBED EARTH OR TUFF
		SELECT COMPACT FILL
		ROCK
		COURSE POROUS FILL
		FINE POROUS FILL
		TOP OF SLOPE
		TOE OF SLOPE
	BM	BENCHMARK INDICATOR
	EL	CONTROL ELEVATION INDICATOR
	NO EL	MONUMENT NO=SEQUENTIAL DESIGNATION EL=ELEVATION
	NO EL	BORING INDICATOR NO=SEQUENTIAL DESIGNATION EL=ELEVATION
	EL	EXISTING ELEVATION INDICATOR
	EL	FINISH ELEVATION INDICATOR
	SC	STEAM/COMMUNICATIONS MANHOLE
		STORM DRAIN GRATE
	X	C – PRECAST CONCRETE, COMMUNICATION VAULT E – PRECAST CONCRETE, ELECTRICAL VAULT F – PRECAST CONCRETE, FUEL OIL VAULT G – PRECAST CONCRETE, NATURAL GAS VAULT T – PRECAST CONCRETE, TELEPHONE VAULT
		THRUST BLOCK
		TEE FITTING
		VALVE
		CULVERT/END SECTION
		DRAINAGE ARROW
		LAYDOWN AREA

SYMBOL	DESCRIPTION
X	C – COMMUNICATION MANHOLE D – STORM DRAIN MANHOLE E – ELECTRICAL MANHOLE G – NATURAL GAS MANHOLE S – SEWER MANHOLE T – TELEPHONE MANHOLE W – WATER MANHOLE
	FIRE HYDRANT
W	UTILITY–WATER REGULATOR VALVE
TM	PRECAST CONCRETE, MANHOLE, TRANSFORMER VAULT
PB	PULL BOX
MH	MANHOLE
TP	TURNING POINT
℄	CENTERLINE
℄	PROPERTY LINE
℄	FLOW LINE
	HANDICAP DESIGNATION
25	INTERSTATE ROUTE
66	U.S. ROUTE
50	STATE ROUTE
	EXISTING PROPERTY CORNER INDICATOR
	NEW PROPERTY CORNER INDICATOR
MATERIAL	VAULT
CO	CLEANOUT
CO	DOUBLE CLEANOUT
CB	CATCH BASIN

SITE UTILITIES

PW	POTABLE WATER
C	CONDENSATE
EMP	EMPTY CONDUIT
S	STEAM
G	NATURAL GAS HIGH PRESSURE (>5 PSI)
SS	SANITARY SEWER
STS	STORM SEWER
F	FIRE PROTECTION WATER
SWTE	SANITARY WASTEWATER TREATED EFFLUENT
E	ELECTRICAL
T	TELECOMMUNICATION

CIVIL LEGEND

DEMOLITION	EXISTING	NEW	DESCRIPTION
			CONCRETE FOUNDATION
	PP	PP	POWER POLE
			SIDEWALK
			PAVED ROAD
	•73.0		SPOT ELEVATION
	P		POWER LINE
			LIGHT (NS)
			LIGHT (NS)
			LIGHT (NS)
			BOLLARD (NS)
			LIGHT POLE (NS)
			FIBER OPTIC MARKER (NS)
	E		ELECTRIC BOX (NS)
			GROUND POLE (NS)
	AH		AC & HEATING UNIT (NS)
	GSD		SEWAGE TANK (NS)
			BUSH (NS)
	PB		PHONE BOX (NS)
			FLOW GAUGE (NS)
			DECIDUOUS TREE (NS)
			AREA INLET (NS)
			ELECTRICAL PULLBOX (NS)
	X X X	X X	CHAIN LINK FENCE
			GUARD RAIL (NS)
		E	UNDERGROUND ELECTRIC (NS)
	AW		ABOVE GROUND WATER (NS)
	AE		ABOVE GROUND ELECTRIC (NS)
	FO		UNDERGROUND FIBER OPTIC (NS)
	W FP	FP	FIRE PROTECTION WATER (NS)
	AFO		ABOVE GROUND FIBER OPTIC (NS)
	W	W	UNDERGROUND WATER (NS)
RLW	RLW		RADIOACTIVE WASTE (NS)
	FO		FIBER OPTIC (NS)
SS	SS	SS	SANITARY SEWER (NS)
		NG	NATURAL GAS (NS)
	UKN		UNKNOWN UTILITY (NS)
UKN			
	FA		FIRE ALARM LINE (NS)
W DOM	W DOM	DW	DOMESTIC WATER SERVICE (NS)
SD	SD		STORM DRAIN (NS)
	COMM		COMMUNICATION CONDUITS (NS)
	SS-FORCE-MAIN	SSFM	SANITARY SEWER FORCE MAIN (NS)
	PRS		POTENTIAL RELEASE SITE – PREVIOUSLY REMOVED – SHOWN FOR INFORMATION ONLY

1 / C-5000 — DETAIL NUMBER / REFERENCE SHEET WHERE DETAIL IS DRAWN

WHERE DETAIL IS AT 90° TO VIEW (E.G. A DETAIL SECTION VIEW) ARROW INDICATES DIRECTION OF CUT (NS)

CIVIL LEGEND

DEMOLITION	EXISTING	NEW	DESCRIPTION
			LIMITS OF DEMOLITION AND/OR CONSTRUCTION (NS)
			PROPOSED / EXISTING LINETYPE (PLAN & PROFILE)
			ASPHALT PAVEMENT
			DIRECTION OF TRAFFIC
			SILT FENCE BOUNDARY (NS)
			CHECK VALVE (NS)
			GATE VALVE (NS)
			BACKFLOW PREVENTER
			(PIV) POST INDICATOR VALVE
			FORCE MAIN CLEANOUT (NS)
			COORDINATE, NORTHING & EASTING
			MANHOLE
			CONCRETE JERSEY BARRIER

ABBREVIATIONS

ADA	AMERICANS WITH DISABILITIES ACT	TOT	TOP OF THRESHOLD (NS)
BFP	BACK FLOW PREVENTOR	TOP	TOP OF PAVEMENT (NS)
CMP	CULVERT CORRUGATED METAL PIPE	TOS	TOP OF SLOPE (NS)
FF	FINISHED FLOOR	PIV	POST INDICATOR VALVE
FL	FLOW LINE	U & I	UTILITIES AND INFRASTRUCTURE
LLW	LOW LEVEL WASTE	ZLD	ZERO LIQUID DISCHARGE
TOC	TOP OF CONCRETE (NS)	RLW	RADIOACTIVE LIQUID WASTE
TOW	TOP OF WALL (NS)		

GENERAL NOTES

1. BASELINE UTILITY DRAWINGS ORIGINALS FROM LANL UMAP AND DO NOT CONFORM TO LANL DRAFTING STANDARDS MANUAL.
2. SURVEY HORIZONTAL COORDINATES ARE GRID VALUES BASED ON THE NORTH AMERICAN DATUM OF 1983 (NAD 83) AND ELEVATIONS ARE BASED ON THE NATIONAL GEODETIC VERTICAL DATUM OF 1929 (NGVD 29)

NO	DATE	CLASS REV	ADC	DESCRIPTION	DRN	DES	CHKD	SUB	APP

AECOM

RLWTF–UP LOW LEVEL WASTE SUBPROJECT

SYMBOL LEGEND

DRAWN	C. MORGAN
DESIGN	C. MORGAN
CHECKED	M. TARIN
DATE	9/8/14

BLDG. 230 TA-50

SUBMITTED MANNY TARIN

APPROVED FOR RELEASE ED ARTIOLA

Los Alamos NATIONAL LABORATORY PO Box 1663 Los Alamos, New Mexico 87545

SHEET C-0001

6 OF 434

CLASSIFICATION REVIDER DATE

PROJECT ID 100761 DRAWING NO C55864 REV 0

12057

File Location: R:_TECHNOLOGY\(0023051) - RLWTF\500 CAD\502 CAD DIRECTORY\ADDA\LLW FACILITY\C\SHEET\55864-C-0001-ROLDWG
Pulled By: BRODBANK, DARLENE Plot Date: Tuesday, May 06, 2014

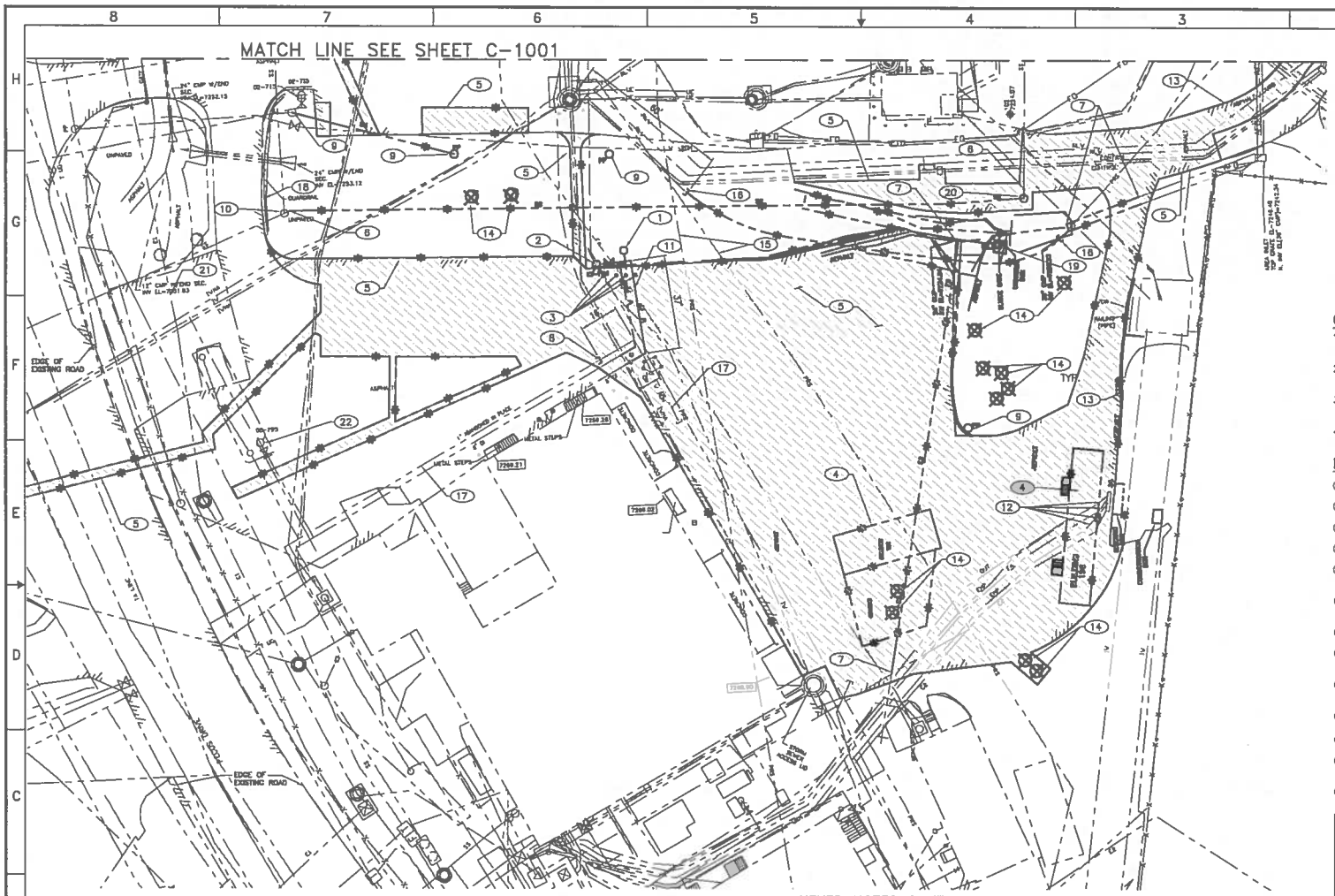

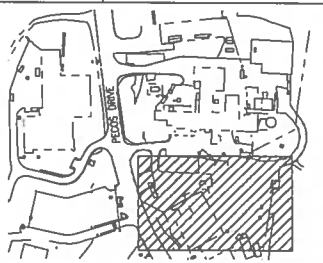

KEY PLAN
SCALE: NONE

GENERAL NOTES

1. IF THIS SHEET IS NOT 24"X 36" THEN IT IS A REDUCED PLOT. USE GRAPHIC SCALE ACCORDINGLY.
2. SUBCONTRACTOR SHALL FIELD VERIFY EXISTING UTILITIES PRIOR TO BEGINNING CONSTRUCTION.
3. BASELINE UTILITY DRAWINGS ARE ORIGINALS FROM LANL UMAP AND DO NOT CONFORM TO LANL DRAFTING STANDARDS MANUAL.
4. SHIPPING CONTAINERS LOCATED BETWEEN THE SOUTH SIDE OF BUILDING 50-1 AND SOUTH LOOP ROAD WILL BE RELOCATED BY LANL.

KEYED NOTES

(1) REMOVE EXISTING Priv.
(2) REMOVE EXISTING FIRE HYDRANT 09-743.
(3) DEMOLISH EXISTING BOLLARDS.
(4) EXISTING PORTABLE BUILDINGS WILL BE RELOCATED BY LANL.
(5) EXISTING ASPHALT SHALL BE SAWCUT, DEMOLISHED AND REMOVED AS REQUIRED PER INSTALLATION PLANS, SEE C-1003.
(6) EXTENTS OF EXISTING SANITARY SEWER PIPE REMOVAL. SEE SHEET C-1009 FOR RELOCATION.
(7) EXTENTS OF EXISTING STORM DRAIN PIPE REMOVAL.
(8) EXTENT OF EXISTING ABANDONED DOMESTIC WATER PIPE REMOVAL, INSTALL CAP.
(9) EXTENTS OF EXISTING OVERHEAD ELECTRICAL LINE REMOVAL INCLUDING LIGHT POLES.
(10) EXISTING MANHOLE TO REMAIN.
(11) EXTENTS OF EXISTING 8" FIRE WATER PIPE REMOVAL, INSTALL CAP.
(12) DISCONNECT CONDUCTORS AT SOURCE AND CAP CONDUITS. ABANDON IN PLACE 5 TOTAL CONDUITS (2 ELECTRICAL, 3 SPARES).
(13) DEMOLISH AND REMOVE EXISTING ASPHALT CURB AND ASPHALT SURFACING, SEE C-1003.

KEYED NOTES CONT.

(14) REMOVE EXISTING TREES.
(15) FORMER RADIOACTIVE WASTE LINE HAS BEEN REMOVED, BUT ADJACENT SOIL LEFT IN PLACE REMAINS POTENTIALLY CONTAMINATED.
(16) REMOVE AND CAP EXISTING UNDERGROUND WASTE LINE.
(17) EXISTING WATER LINE TO REMAIN.
(18) REMOVE AND RELOCATE EXISTING GUARDRAIL AS REQUIRED PER INSTALLATION PLANS, SEE SHEET C-1003.
(19) DEMOLISH EXISTING ELECTRICAL BOX AND ALL ASSOCIATED COMPONENTS.
(20) REMOVE EXISTING MANHOLE.
(21) EXISTING UNDERGROUND POWER TO REMAIN.
(22) EXISTING FIRE HYDRANT TO REMAIN.

NO	DATE	CLASS REV	ADC	DESCRIPTION	DWN	DES	CHKD	SUB	APP

AECOM

RLWTF-UP LOW LEVEL WASTE SUBPROJECT

SITE DEMOLITION PLAN

DRAWN C. MORGAN
DESIGN C. MORGAN
CHECKED M. TARIN
DATE 5/8/14

BLDG. 230 TA-50

SUBMITTED MANNY TARIN
APPROVED FOR RELEASE ED ARTEGLIA

Los Alamos NATIONAL LABORATORY PO Box 1663 Los Alamos, New Mexico 87545

SHEET C-1000
7 OF 434

CLASSIFICATION REVIEWER DATE

PROJECT ID 100761
DRAWING NO C55864
REV 0

85021 :
File Location: P:_SESHOLLOW\MODELS\... - RLWTF_SDD CAD\SDD DWG DIRECTORY\MODELS\LLW FACILITY\SHEETS\55864-C-1003-RELEASE
Plotted By: BRADSHAW, DARLENE; Plot Date: Tuesday, May 06, 2014

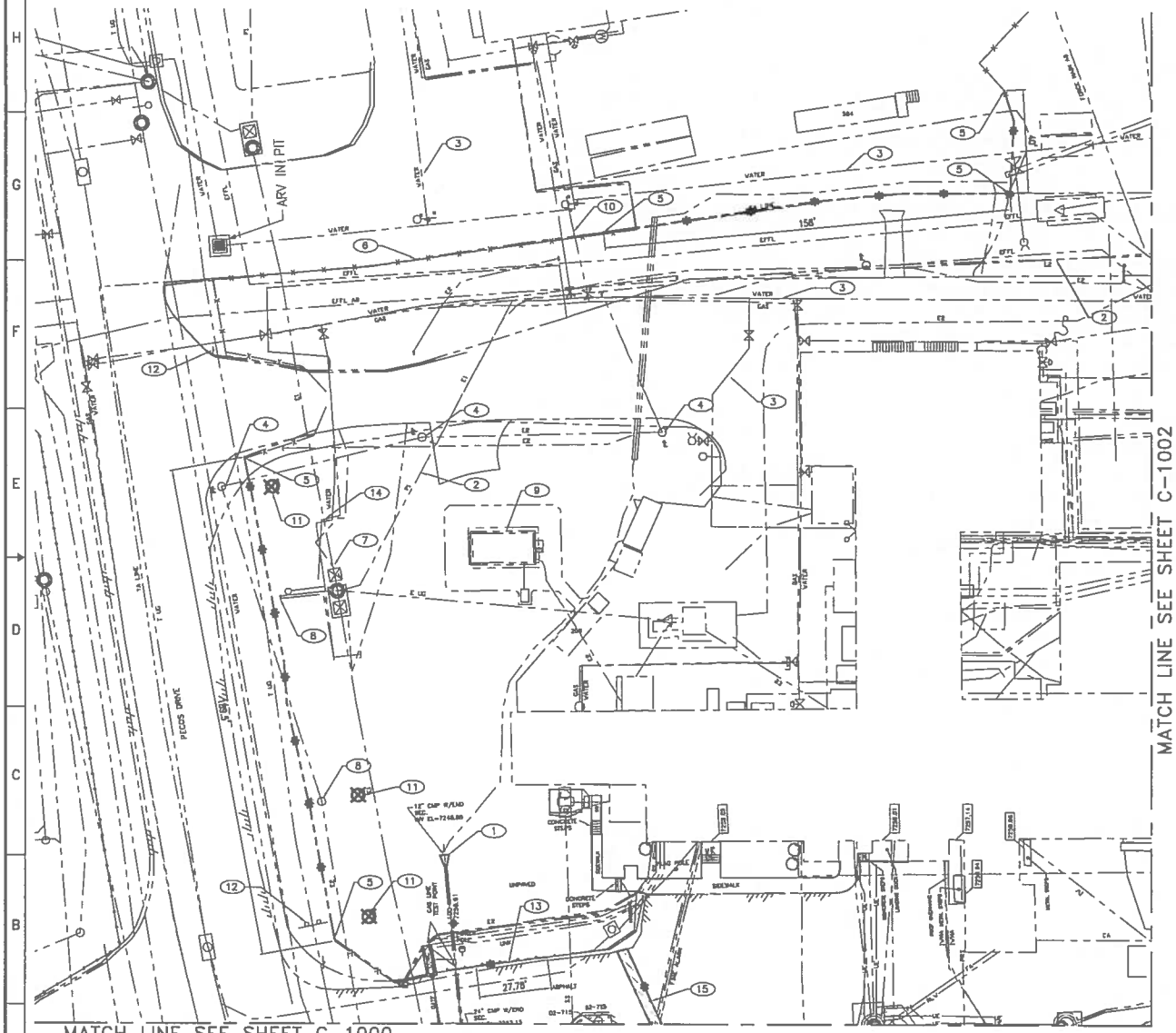

SITE DEMOLITION PLAN

20' 10' 0 10' 20'
1"=20'-0"

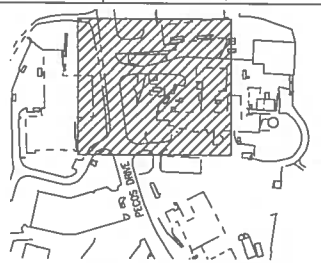

KEY PLAN
SCALE: NONE

GENERAL NOTES

1. IF THIS SHEET IS NOT 24"X 36" THEN IT IS A REDUCED PLOT. USE GRAPHIC SCALE ACCORDINGLY.
2. SUBCONTRACTOR SHALL FIELD VERIFY EXISTING UTILITIES PRIOR TO BEGINNING CONSTRUCTION.
3. BASELINE UTILITY DRAWINGS ARE ORIGINALS FROM LANL. UMAP AND DO NOT CONFORM TO LANL DRAFTING STANDARDS MANUAL.

KEYED NOTES

(1) REMOVE EXISTING CULVERT END SECTION, CULVERT TO BE EXTENDED PER INSTALLATION PLANS, SEE C-1004.
(2) EXISTING OVERHEAD ELECTRICAL TO REMAIN.
(3) EXISTING UNDERGROUND WATER LINE TO REMAIN.
(4) EXISTING OVERHEAD POWER POLES TO REMAIN.
(5) EXTENTS OF EXISTING FENCE TO BE REMOVED.
(6) EXISTING FENCE TO REMAIN.
(7) EXISTING MANHOLE AND TRANSFORMER TO REMAIN.
(8) EXISTING OVERHEAD POWER POLE AND POWER LINE TO BE RELOCATED. SEE SHEET C-1004 FOR NEW LOCATION.
(9) EXISTING BUILDING 188 TO REMAIN
(10) EXISTING UNDERGROUND GAS TO REMAIN.
(11) REMOVE EXISTING TREES.
(12) EXISTING SIGN TO REMAIN.
(13) REMOVE EXISTING GUARD RAIL AND POSTS. INSTALL NMDOT TYPE B END TREATMENTS PER NMDOT STD DRAWING 606-08-2/3.
(14) EXISTING UNDERGROUND POWER TO REMAIN.
(15) EXISTING ASPHALT SHALL BE SAWCUT, DEMOLISHED AND REMOVED AS REQUIRED PER INSTALLATION PLANS.

NO	DATE	CLASS REV	ADC	DESCRIPTION	DRW	DES	CHKD	SUB	APP

AECOM

RLWTF-UP LOW LEVEL WASTE SUBPROJECT

SITE DEMOLITION PLAN

BLDG. 230 TA-50

DRAWN	C. MORGAN
DESIGN	C. MORGAN
CHECKED	M. TARIN
DATE	5/8/14

SUBMITTED: MANNY TARIN
APPROVED FOR RELEASE: ED ARTIOLIA

Los Alamos NATIONAL LABORATORY
PO Box 1663 Los Alamos, New Mexico 87545

SHEET: C-1001
8 OF 434

CLASSIFICATION | REVIEWER | DATE

PROJECT ID: 100761
DRAWING NO: C55864
REV: 0

65027 :

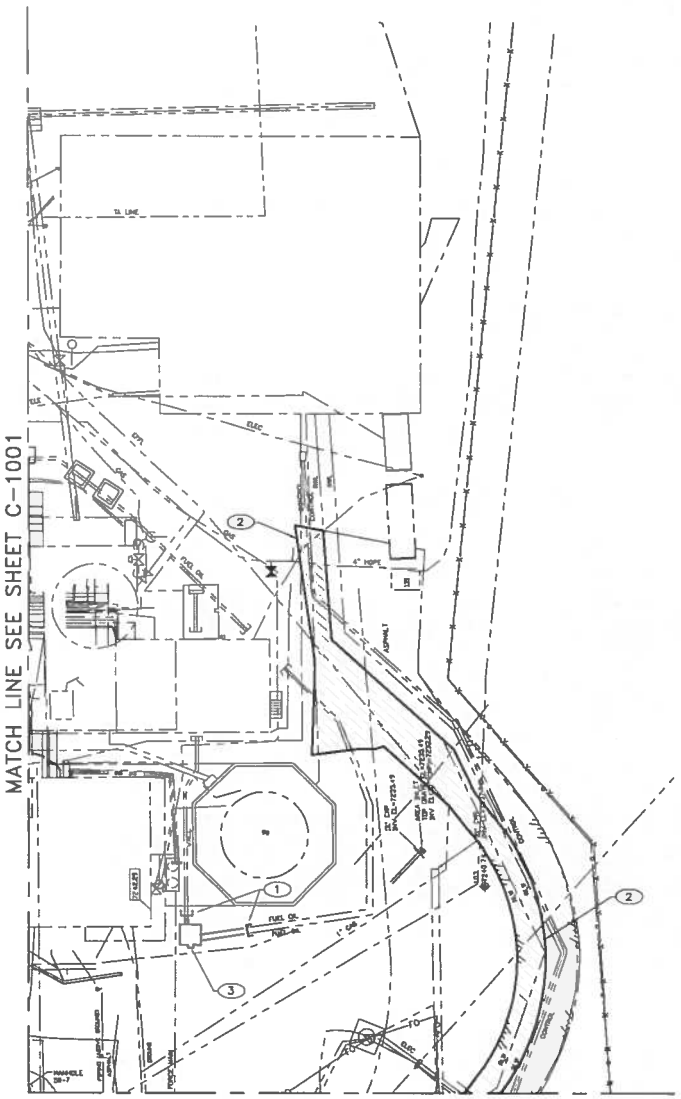

SITE DEMOLTION PLAN

20' 10' 0 10' 20'

1"=20'-0"

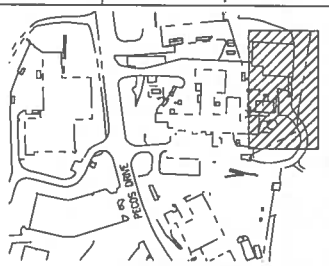

KEY PLAN
SCALE: NONE

GENERAL NOTES

1. IF THIS SHEET IS NOT 24"X 36" THEN IT IS A REDUCED PLOT. USE GRAPHIC SCALE ACCORDINGLY.
2. SUBCONTRACTOR SHALL FIELD VERIFY EXISTING UTILITIES PRIOR TO BEGINNING CONSTRUCTION.
3. BASELINE UTILITY DRAWINGS ARE ORIGINALS FROM LANL UMAP AND DO NOT CONFORM TO LANL DRAFTING STANDARDS MANUAL.

KEYED NOTES

(1) REMOVE AND DISPOSE OF EXISTING FUEL OIL LINES AS REQUIRED PER INSTALLATION PLANS. CAP AND ABANDON IN PLACE.

(2) EXISTING ASPHALT SHALL BE SAWCUT, DEMOLISHED AND REMOVED AS REQUIRED PER INSTALLATION PLANS.

(3) REMOVE AND DISPOSE OF EXISTING UNDERGROUND CONCRETE TANK.

NO	DATE	CLASS REV	ADC	DESCRIPTION	DRN	DES	CHKD	SUB	APP

AECOM

RLWTF-UP LOW LEVEL WASTE SUBPROJECT

SITE DEMOLITION PLAN

BLDG. 230 TA-50

DRAWN	C. MORGAN
DESIGN	C. MORGAN
CHECKED	M. TARIN
DATE	5/8/14

SUBMITTED MANNY TARIN

APPROVED FOR RELEASE ED ARTIOLA

Los Alamos NATIONAL LABORATORY PO Box 1663 Los Alamos, New Mexico 87545

SHEET C-1002

9 OF 434

CLASSIFICATION | REVIEWER | DATE

PROJECT ID 100761 | DRAWING NO C55864 | REV 0

09521 :

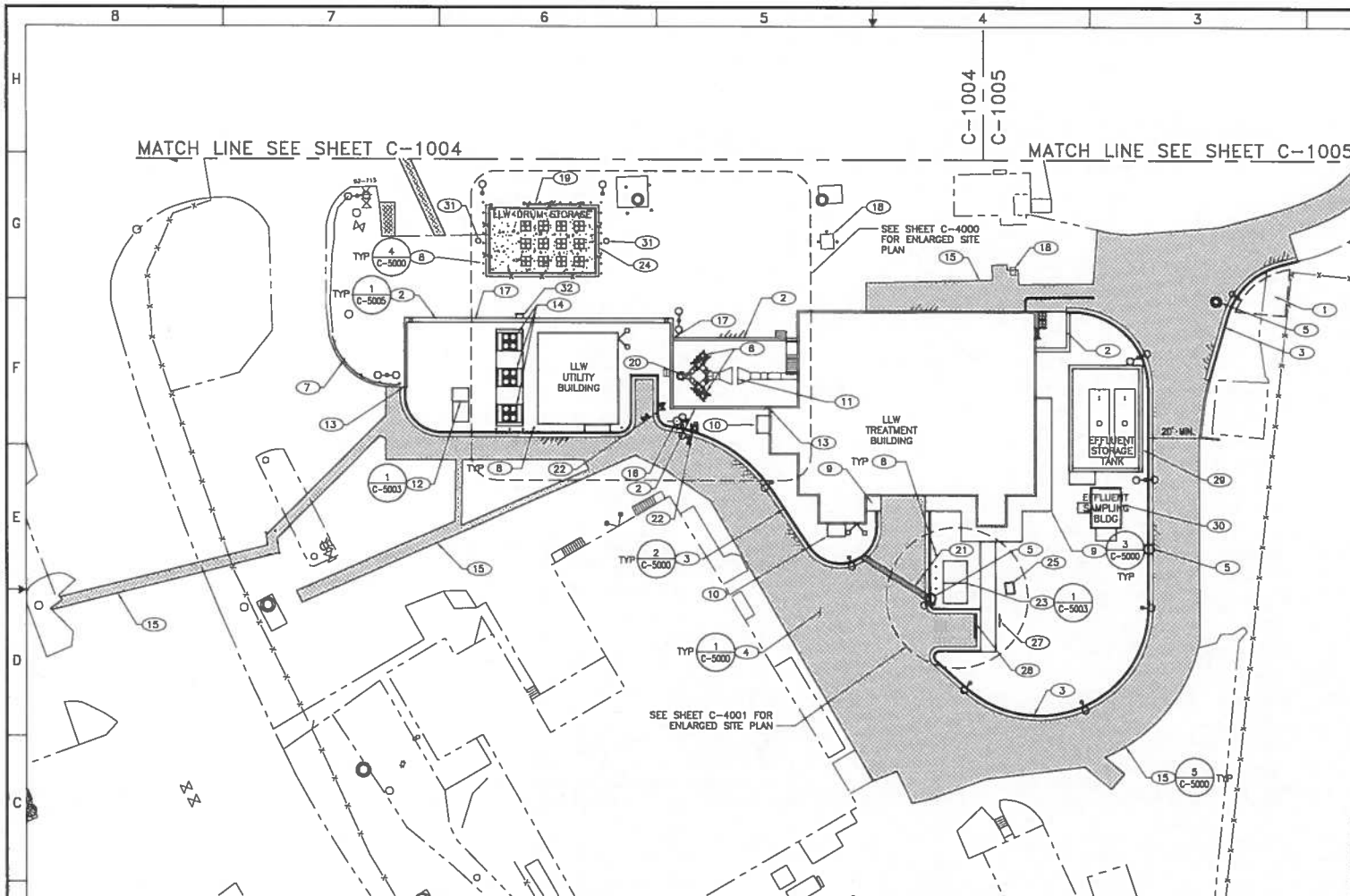

SITE PLAN

20' 10' 0 10' 20'
1"=20'-0"

KEY PLAN
SCALE: NONE

GENERAL NOTES

1. IF THIS SHEET IS NOT 24"X 36" THEN IT IS A REDUCED PLOT. USE GRAPHIC SCALE ACCORDINGLY.
2. SUBCONTRACTOR SHALL FIELD VERIFY EXISTING UTILITIES PRIOR TO BEGINNING CONSTRUCTION.
3. BASELINE UTILITY DRAWINGS ARE ORIGINALS FROM LANL UMAP AND DO NOT CONFORM TO LANL DRAFTING STANDARDS MANUAL.
4. SEE SHEETS C-1018 THROUGH C-1022 FOR LAYOUT INFORMATION.

KEYED NOTES

1. MUSTER AREA LOCATIONS.
2. CONCRETE RETAINING WALL, SEE SHEETS C-1018 AND C-1019 FOR WALL GEOMETRY.
3. CONCRETE CURB AND GUTTER.
4. NEW ASPHALT PAVING.
5. NEW STORM DRAIN MANHOLE.
6. FE-5309 AND FE-5310, WITH CONCRETE PAD, REFER TO STRUCTURAL FOR PAD DETAILS.
7. NEW GUARDRAIL AND POSTS.
8. 4 INCH CONCRETE FILLED PIPE BOLLARDS (29 TOTAL) SPACED AT 4'-0" O.C.
9. CONCRETE SIDEWALK.
10. CONCRETE STOOP, SEE DETAIL 4 ON SHEET C-5007.
11. NRC-5319A&B AND NRC-5320A&B WITH CONCRETE PAD.
12. NEW XFMR-B CONCRETE TRANSFORMER PAD.
13. END OF CONCRETE RETAINING WALL.
14. AIR COOLED CHILLERS ON CONCRETE PADS, REFER TO STRUCTURAL FOR DETAILS.

KEYED NOTES CONT.

31. LIGHTNING PROTECTION MAST FOR DRUM STORAGE, SEE SHEET E-1003 FOR LOCATION.
32. PULL BOX FOR TRANSITION OF TELECOMMUNICATIONS ENTRANCE CONDUIT FROM BELOW GRADE TO ABOVE GRADE.

KEYED NOTES CONT.

25. NEW STORM DRAIN DROP INLET.
26. NEW STORM DRAIN CURB INLET.
27. NEW SIGN "HANDICAP PARKING ONLY".
28. CONCRETE CAR STOP.
29. CONCRETE EFFLUENT TANK CONTAINMENT, SEE SHEET C-1018 FOR COORDINATE INFORMATION.
30. MASONRY EFFLUENT SAMPLE BUILDING, SEE SHEET C-1018 FOR COORDINATE INFORMATION.

KEYED NOTES CONT.

15. EDGE OF NEW ASPHALT PAVEMENT ABUTTING EXISTING PAVEMENT.
16. NEW FIRE HYDRANT, SEE DETAIL 5 ON SHEET C-5001.
17. GUARD RAILS TO BE INSTALLED ON ALL RETAINING WALLS UNLESS OTHERWISE NOTED.
18. EXISTING F.O. BOX TO REMAIN.
19. 15'-0" GATE SHOWN IN THE OPEN POSITION, WITH 7'-6" COUNTER BALANCE. SEE DETAILS 1 AND 2 ON SHEET C55866-C-5300.
20. EXHAUST STACK.
21. UNDERGROUND STORM DRAINAGE CULVERT.
22. NEW PIV, SEE DETAIL 4 ON SHEET C-5001.
23. NEW XFMR-A TRANSFORMER PAD.
24. NEW CHAINLINK FENCE. SEE DETAIL 1 ON SHEET C55866-C-5300.

NO	DATE	CLASS REV	ADC	DESCRIPTION	DWN	DES	CHKD	SUB	APP

AECOM

RLWTF-UP LOW LEVEL WASTE SUBPROJECT

SITE PLAN

BLDG. 230 TA-50

DRAWN	C. MORGAN
DESIGN	C. MORGAN
CHECKED	M. TARIN
DATE	5/8/14

SUBMITTED: MANNY TARIN

APPROVED FOR RELEASE: ED ARTIOLIA

Los Alamos NATIONAL LABORATORY, PO Box 1663, Los Alamos, New Mexico 87545

SHEET C-1003 — 10 OF 434

CLASSIFICATION | REVIEWER | DATE

PROJECT ID 100761 | DRAWING NO C55864 | REV 0

File Location: P:_TECHNOLOGY\60239831 - RLWTF\500 CAD\502 CAD DIRECTORY\AECOM\LLW FACILITY\C\SHEET\55864-C-1003-R0.DWG
Plotted By: BROCKMAN, DARLING; Plot Date: Tuesday, May 06, 2014

12061

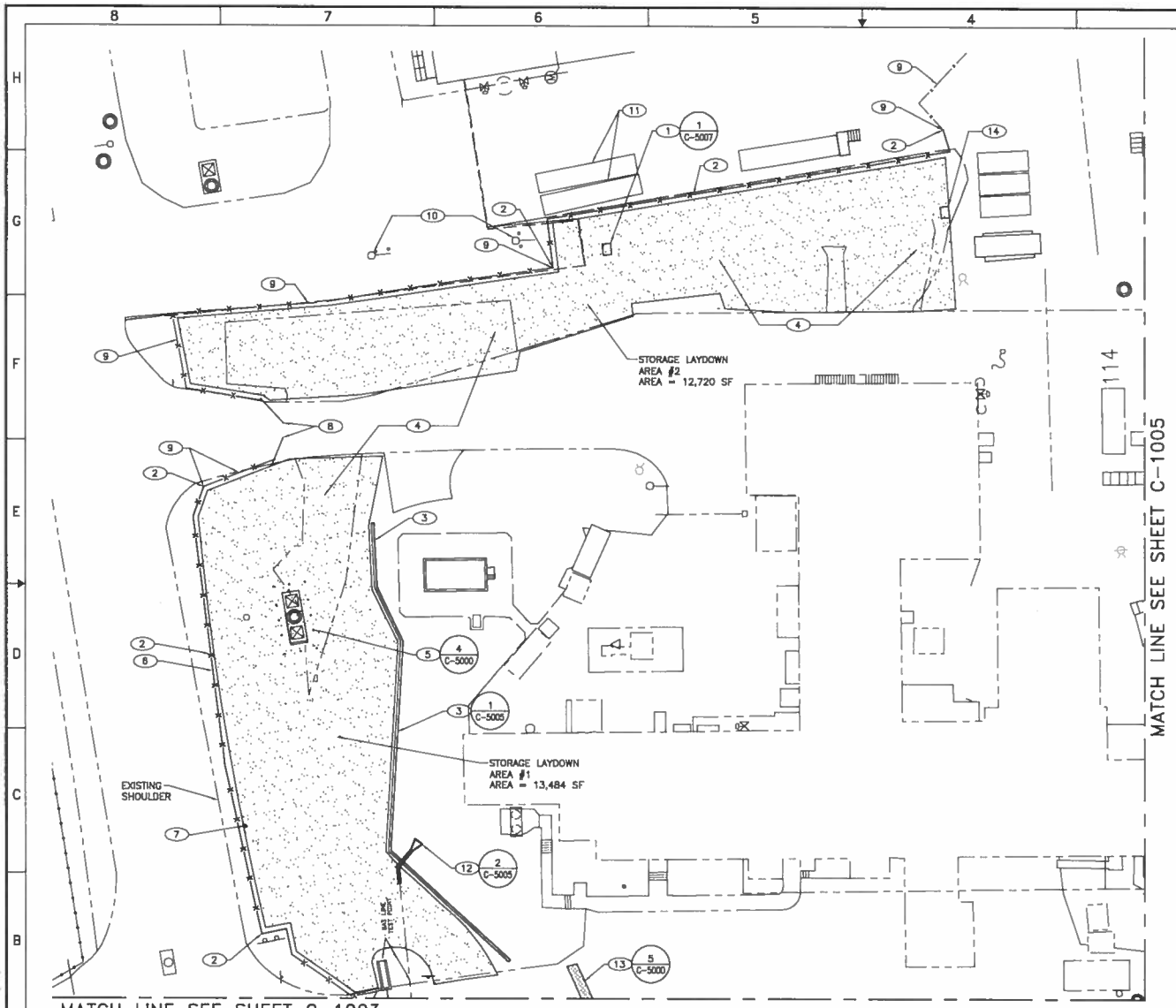

SITE PLAN

20' 10' 0 10' 20'
1"=20'-0"

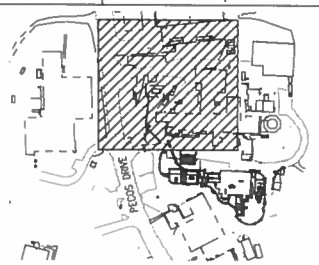

KEY PLAN
SCALE: NONE

GENERAL NOTES

1. IF THIS SHEET IS NOT 24"X 36" THEN IT IS A REDUCED PLOT. USE GRAPHIC SCALE ACCORDINGLY.
2. SUBCONTRACTOR SHALL FIELD VERIFY EXISTING UTILITIES PRIOR TO BEGINNING CONSTRUCTION.
3. SEE SHEETS C-1018 THROUGH C-1022 FOR LAYOUT INFORMATION.

KEYED NOTES

(1) NEW DROP INLET, CONNECT TO EXISTING STORM SEWER.
(2) NEW 8' CHAIN LINK FENCE, SEE DETAIL 1 SHEET C55866-C-5300.
(3) NEW RETAINING WALL, SEE SHEET C-1020 FOR WALL GEOMETRY.
(4) NEW GRAVEL SURFACE FOR STORAGE LAYDOWN AREA #1 AND #2, 6 INCHES OF COMPACTED BASECOURSE OVER 12 INCHES OF SUBGRADE.
(5) NEW BOLLARDS SPACED AT 4'-0" O.C. (TYPICAL).
(6) NEW FENCE TO BE APPROXIMATELY 12'-0" MINIMUM OFF EXISTING SHOULDER.
(7) NEW LOCATION FOR OVERHEAD POWER POLE, 5'-0" OFF NEW FENCE LOCATION.
(8) EXISTING GATE TO REMAIN. THIS GATE CAN BE USED FOR VEHICLE ENTRANCE AND EXITS TO THE RLWTF AREA. VEHICLE MOVEMENTS SHOWN ON SHEETS C-1016 AND C-1017.
(9) EXISTING FENCE TO REMAIN.
(10) EXISTING FIRE HYDRANT AND BOLLARDS.
(11) EXISTING STORAGE TRAILERS.
(12) NEW STORM DRAIN OUTLET.
(13) EDGE OF NEW ASPHALT PAVEMENT ABUTTING EXISTING PAVEMENT.
(14) NEW DROP INLET.

NO	DATE	CLASS REV	ADC	DESCRIPTION	DWN	DES	CHKD	SUB	APP

AECOM

RLWTF-UP LOW LEVEL WASTE SUBPROJECT

SITE PLAN

DRAWN	C. MORGAN
DESIGN	C. MORGAN
CHECKED	M. TARIN
DATE	5/8/14

BLDG. 230 TA-50

SUBMITTED: MANNY TARIN | APPROVED FOR RELEASE: ED ARTIOLA

Los Alamos NATIONAL LABORATORY — PO Box 1663, Los Alamos, New Mexico 87545

SHEET C-1004
11 OF 434

CLASSIFICATION | REVIEWER | DATE

PROJECT ID 100761 | DRAWING NO C55864 | REV 0

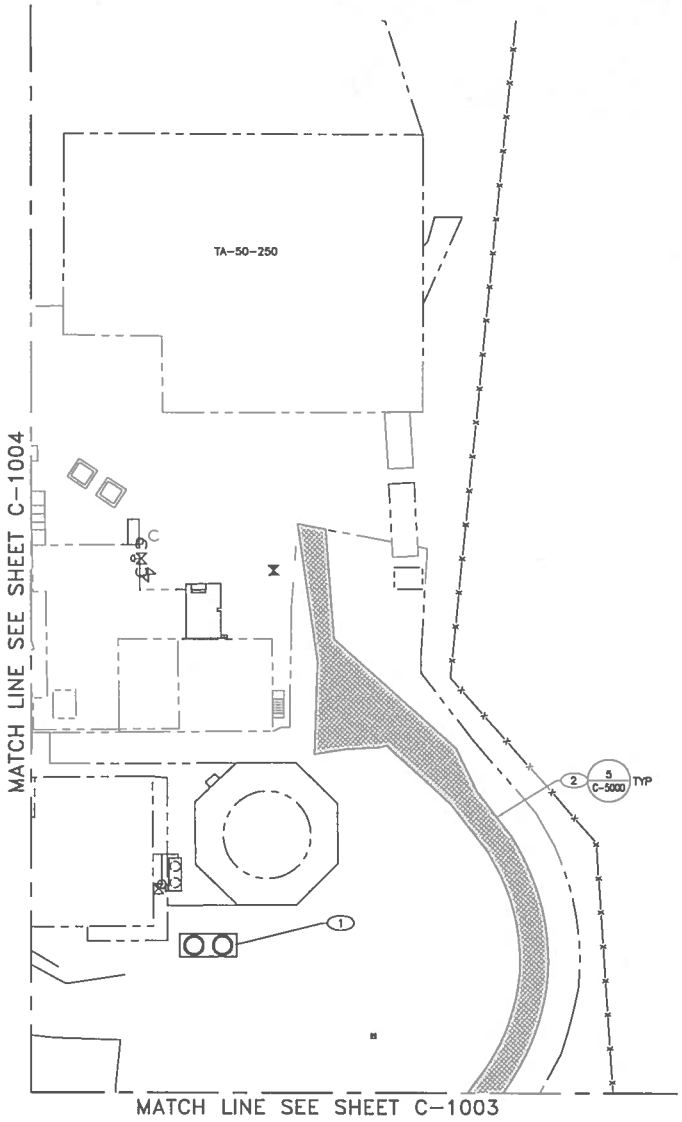

SITE PLAN

20' 10' 0 10' 20'

1"=20'-0"

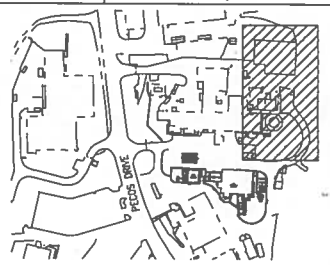

KEY PLAN
SCALE: NONE

GENERAL NOTES

1. IF THIS SHEET IS NOT 24"X 36" THEN IT IS A REDUCED PLOT. USE GRAPHIC SCALE ACCORDINGLY.
2. SUBCONTRACTOR SHALL FIELD VERIFY EXISTING UTILITIES PRIOR TO BEGINNING CONSTRUCTION.
3. SEE SHEETS C-1018 THROUGH C-1022 FOR LAYOUT INFORMATION.

KEYED NOTES

(1) SANITARY SEWER LIFT STATION, SEE DETAIL 1 ON SHEET C-5002.

(2) EDGE OF NEW ASPHALT PAVEMENT ABUTTING EXISTING ASPHALT PAVEMENT.

NO	DATE	CLASS REV	ADC	DESCRIPTION	DWN	DES	CHKD	SUB	APP

AECOM

RLWTF-UP LOW LEVEL WASTE SUBPROJECT

SITE PLAN

BLDG. 230 TA-50

SUBMITTED MANNY TARIN

APPROVED FOR RELEASE ED ARTEGA

DRAWN	C. MORGAN
DESIGN	C. MORGAN
CHECKED	M. TARIN
DATE	8/8/14

Los Alamos NATIONAL LABORATORY PO Box 1663 Los Alamos, New Mexico 87545

SHEET C-1005

12 OF 434

CLASSIFICATION REVIEWER DATE

PROJECT ID 100761 DRAWING NO C55864 REV 0

12053

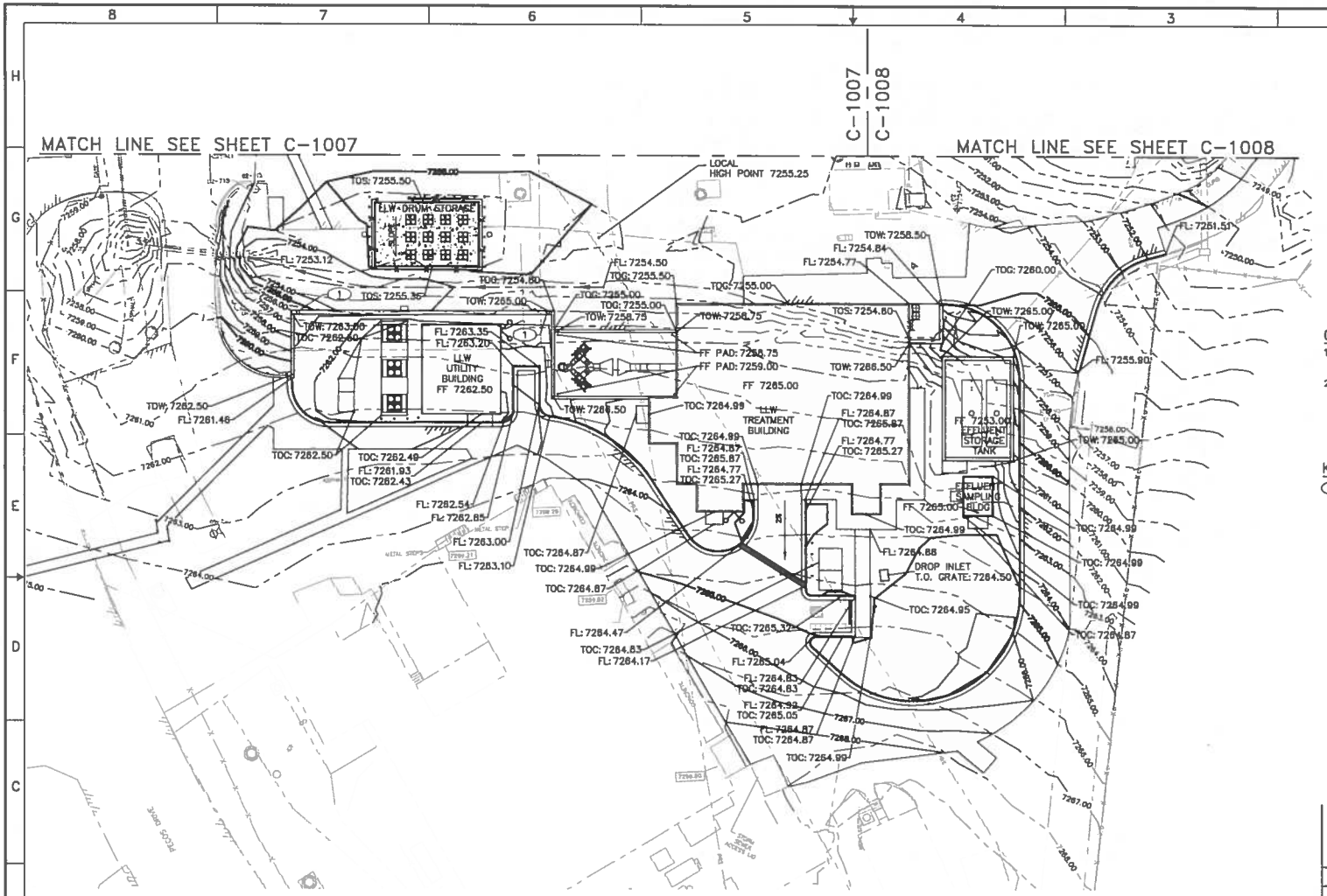

GRADING PLAN

20' 10' 0 10' 20'

1"=20'-0"

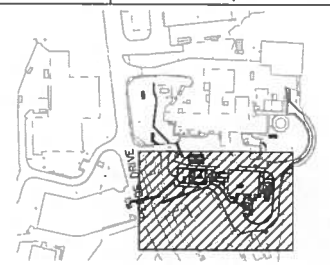

KEY PLAN

SCALE: NONE

GENERAL NOTES

1. IF THIS SHEET IS NOT 24"X 36" THEN IT IS A REDUCED PLOT. USE GRAPHIC SCALE ACCORDINGLY.
2. SEE SHEET C-1023 FOR SURVEY CONTROL INFORMATION.

KEYED NOTES

(1) (1) 12" WIDE x 6" HIGH RETAINING WALL OPENING AT LOCATION SHOWN, FOR DRAINAGE @ INV.= 7260.50, SEE RETAINING WALL DETAIL 1/C-5005.

NO	DATE	CLASS REV	ADC	DESCRIPTION	DRW	DES	CHKD	SUB	APP

AECOM

RLWTF-UP LOW LEVEL WASTE SUBPROJECT

GRADING PLAN

DRAWN	C. MORGAN
DESIGN	C. MORGAN
CHECKED	M. TARIN
DATE	5/6/14

BLDG. 230 TA-50

SUBMITTED MANNY TARIN

APPROVED FOR RELEASE ED ARTIOLA

Los Alamos NATIONAL LABORATORY PO Box 1663 Los Alamos, New Mexico 87545

SHEET C-1006

13 OF 434

CLASSIFICATION REVIEWER DATE

PROJECT ID 100761

DRAWING NO C55864

REV 0

File Location: P:\EDMS\DOCS\DOC\DOC0001 - RLWTF\300 CAD\302 CAD DIRECTORY\MECHANICAL\LLW FACILITY\C\LLWL 3D\LLWTF-BASE.DWG
Plotted By: MORGAN, CHRIS; Plot Date: Wednesday, May 07, 2014

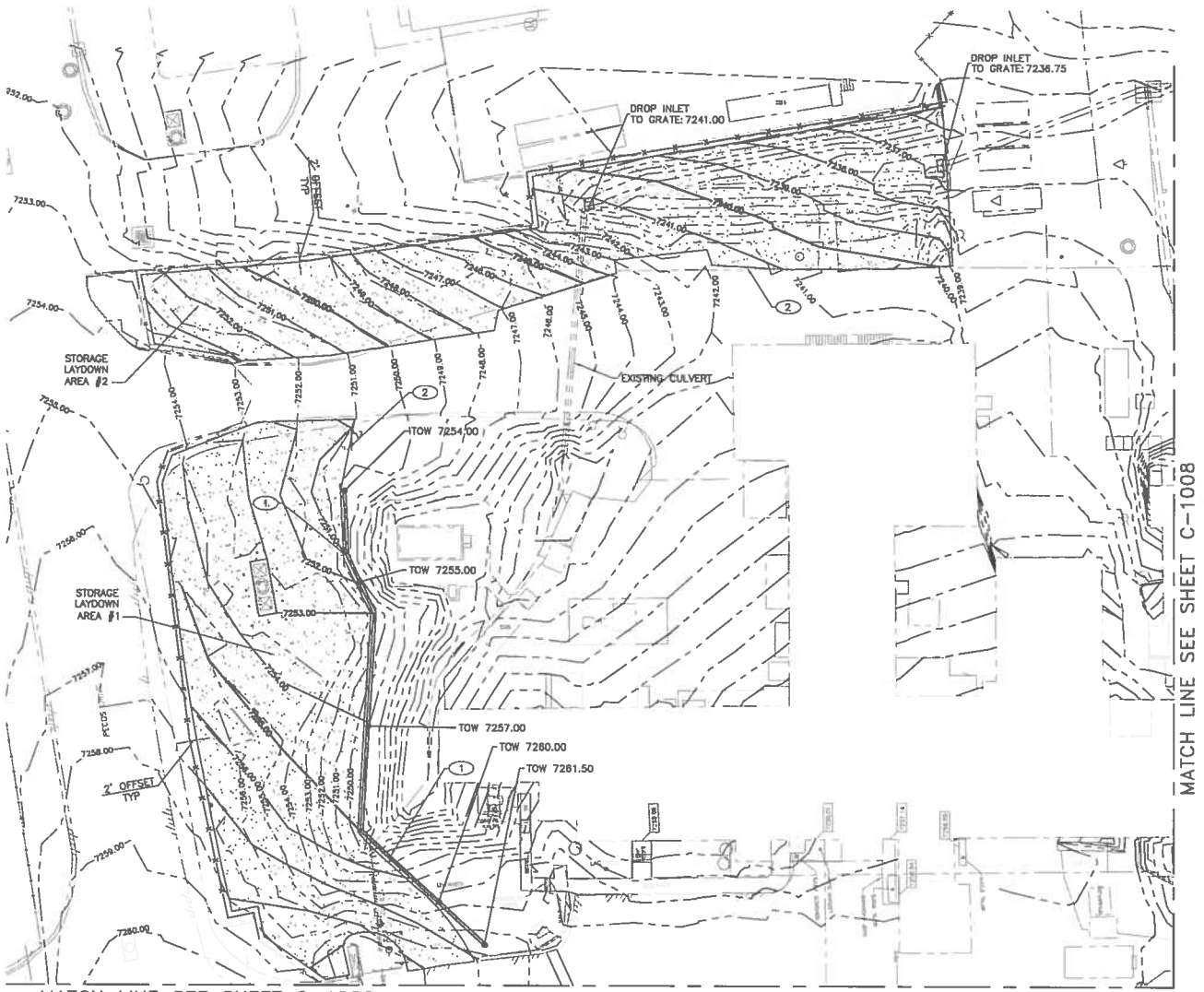

GRADING PLAN

20' 10' 0 10' 20'

1"=20'-0"

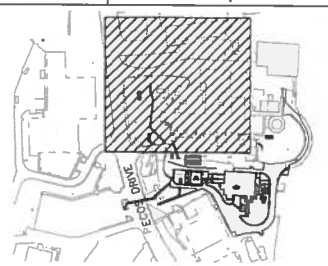

KEY PLAN
SCALE: NONE

GENERAL NOTES

1. IF THIS SHEET IS NOT 24"X 36" THEN IT IS A REDUCED PLOT. USE GRAPHIC SCALE ACCORDINGLY.
2. SEE SHEET C-1023 FOR SURVEY CONTROL INFORMATION.

KEYED NOTES

(1) NEW RETAINING WALL, SEE DETAIL 1/C-5005.

(2) LIMITS OF GRAVEL SURFACE.

NO	DATE	CLASS REV	ADC	DESCRIPTION	DWN	DES	CHKD	SUB	APP

AECOM

RLWTF-UP LOW LEVEL WASTE SUBPROJECT

GRADING PLAN

DRAWN	C. MORGAN
DESIGN	C. MORGAN
CHECKED	M. TARIN
DATE	5/6/14

BLDG. 230 TA-50

SUBMITTED MANNY TARIN

APPROVED FOR RELEASE ED ARTIGLIA

Los Alamos NATIONAL LABORATORY PO Box 1663 Los Alamos, New Mexico 87545

SHEET C-1007

14 OF 434

CLASSIFICATION REVIEWER DATE

PROJECT ID 100761 DRAWING NO C55864 REV 0

Saved: 5/6/2014 2:11:37 PM By: MORGAN, CHRIS Plot Date: Wednesday, May 07, 2014 Plot By: MORGAN, CHRIS Plot Scale: 1.0000 Measurement: ft Page Setup Name: --- InsUnits: 2 Plot CTB File: LAYLOTB.ctb
Path: C:\Users\cmorgan\Documents\D2063 - RLWTF\UP CA\LWO CAD DIRECTORY\ARCH\LLW FACILITY\CIVIL 3D\LWTF-BASE.DWG

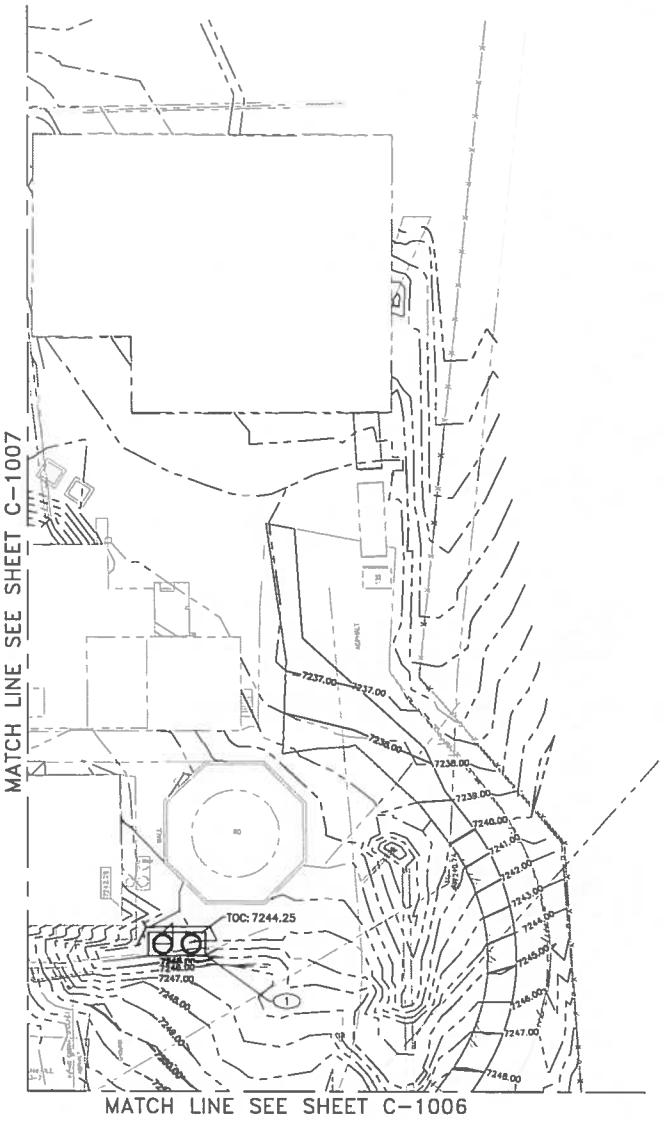

GRADING PLAN

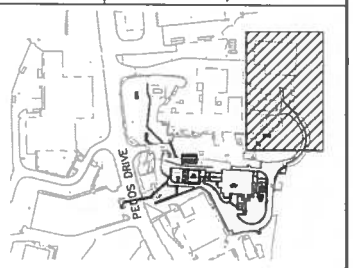

KEY PLAN
SCALE: NONE

GENERAL NOTES

1. IF THIS SHEET IS NOT 24"X 36" THEN IT IS A REDUCED PLOT. USE GRAPHIC SCALE ACCORDINGLY.
2. SEE SHEET C-1023 FOR SURVEY CONTROL INFORMATION.

KEYED NOTES

1. SANITARY SEWER LIFT STATION.

NO	DATE	CLASS REV	ADC	DESCRIPTION	DWN	DES	CHKD	SUB	APP

AECOM

RLWTF-UP LOW LEVEL WASTE SUBPROJECT

GRADING PLAN

BLDG. 230 TA-50

DRAWN	C. MORGAN
DESIGN	C. MORGAN
CHECKED	M. TARIN
DATE	5/8/14

SUBMITTED: MANNY TARIN

APPROVED FOR RELEASE: ED ARTIGLIA

Los Alamos NATIONAL LABORATORY PO Box 1663 Los Alamos, New Mexico 87545

SHEET C-1008

15 OF 434

CLASSIFICATION | REVIEWER | DATE

PROJECT ID 100761 | DRAWING NO C55864 | REV 0

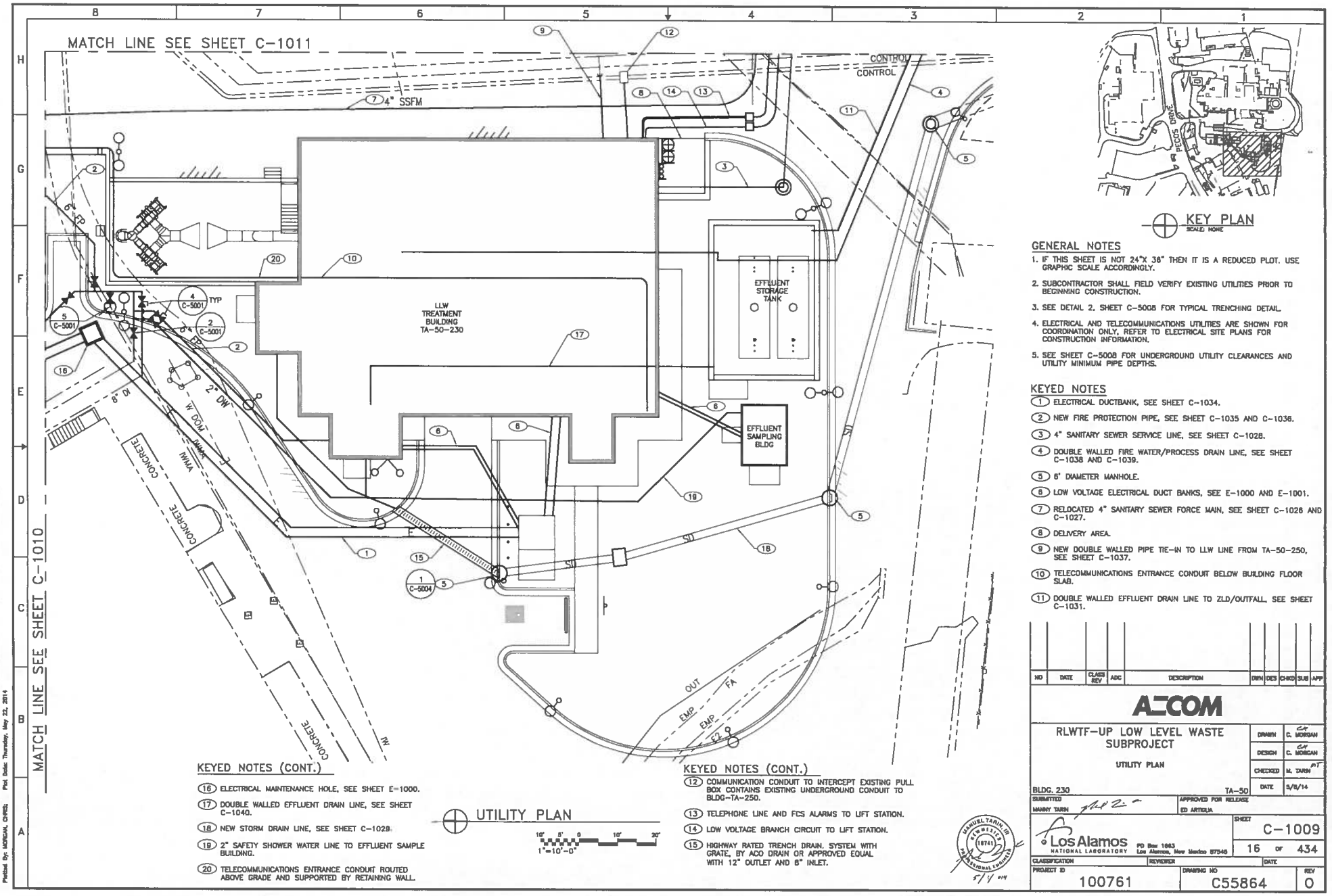
MATCH LINE SEE SHEET C-1011
MATCH LINE SEE SHEET C-1010
LLW TREATMENT BUILDING TA-50-230
EFFLUENT STORAGE TANK
EFFLUENT SAMPLING BLDG
CONTROL
CONTROL
4" SSFM
PECOS DRIVE
CONCRETE
CONCRETE
CONCRETE
W DOM
INMH
OUT
FA
EMP
EMP
SD
SD
SD

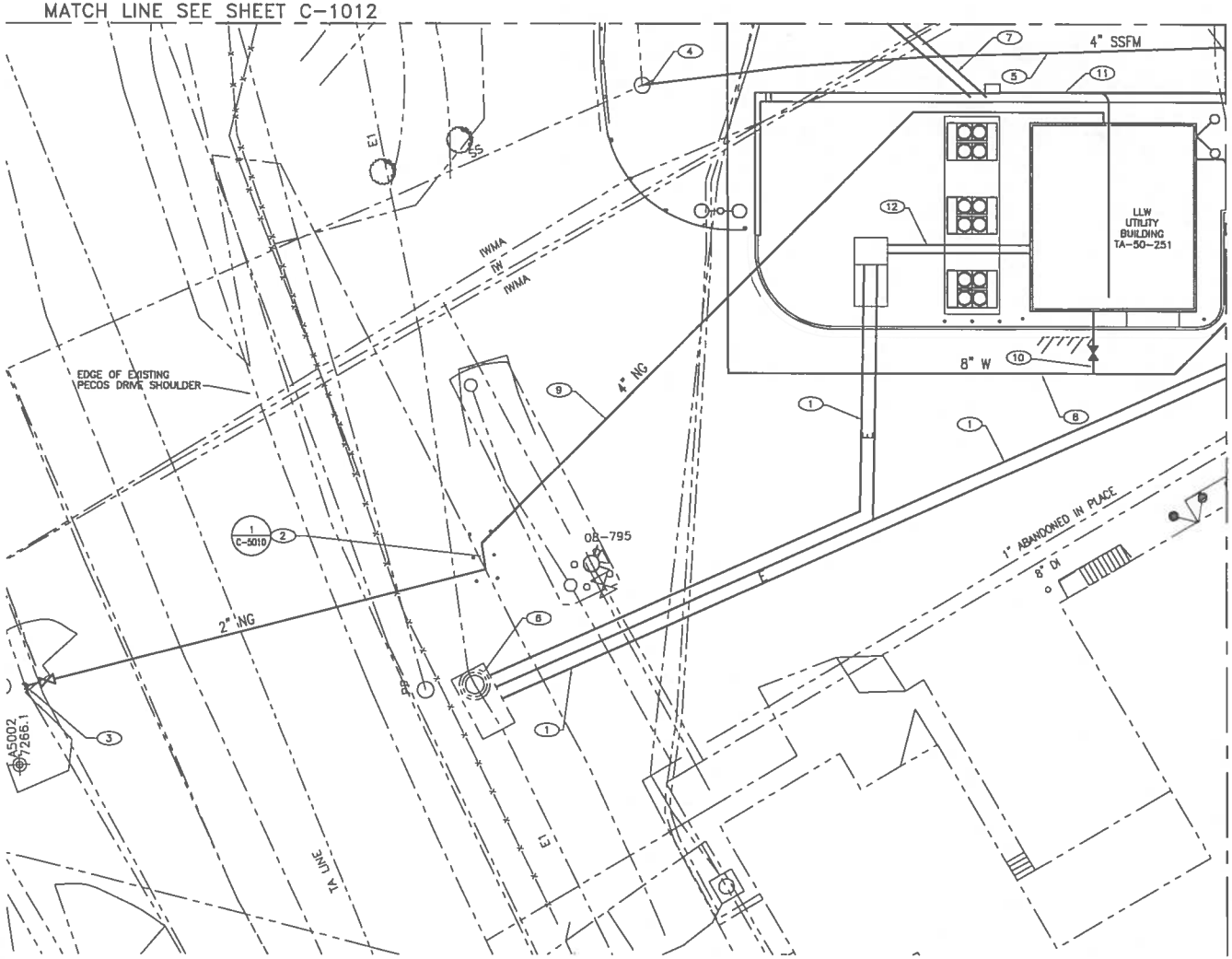

UTILITY PLAN

1"=10'-0"

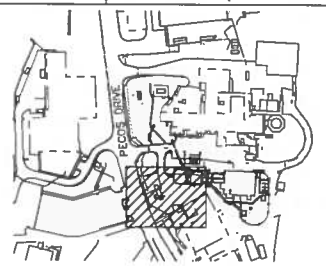

KEY PLAN
SCALE: NONE

GENERAL NOTES

1. IF THIS SHEET IS NOT 24"X 36" THEN IT IS A REDUCED PLOT. USE GRAPHIC SCALE ACCORDINGLY.
2. SUBCONTRACTOR SHALL FIELD VERIFY EXISTING UTILITIES PRIOR TO BEGINNING CONSTRUCTION.
3. SEE DETAIL 2, SHEET C-5008 FOR TYPICAL TRENCHING DETAIL.
4. ELECTRICAL AND TELECOMMUNICATIONS UTILITIES ARE SHOWN FOR COORDINATION ONLY, REFER TO ELECTRICAL SITE PLANS FOR CONSTRUCTION INFORMATION.
5. SEE SHEET C-5008 FOR UNDERGROUND UTILITY CLEARANCES AND UTILITY MINIMUM PIPE DEPTHS.

KEYED NOTES

1. MEDIUM VOLTAGE CONCRETE ELECTRICAL DUCT BANK, SEE SHEET C-1034.
2. NATURAL GAS REGULATOR STATION, SEE SHEET C-5010.
3. NEW GAS TIE-IN, SEE SHEET C-5010.
4. TIE TO EXISTING FORCEMAIN AT EXISTING MANHOLE.
5. RELOCATED 4" SANITARY SEWER FORCE MAIN, SEE SHEET C-1026.
6. EXISTING MANHOLE FOR MEDIUM VOLTAGE ELECTRICAL UTILITIES.
7. COMMUNICATIONS DUCT BANK, SEE SHEET C-1032.
8. NEW WATER PIPE, SEE SHEET C-1035 AND C-1036.
9. NEW GAS LINE, SEE SHEET C-1033.
10. NEW DOMESTIC WATER LINE, SEE SHEET C-1035.
11. TELECOMMUNICATIONS ENTRANCE CONDUIT. ROUTED ABOVE GRADE AND SUPPORTED BY RETAINING WALL.
12. LOW VOLTAGE ELECTRICAL DUCT BANK.

NO	DATE	CLASS REV	ADC	DESCRIPTION	DWN	DES	CHKD	SUB	APP

AECOM

RLWTF-UP LOW LEVEL WASTE SUBPROJECT

UTILITY PLAN

BLDG. 230 TA-50

DRAWN	C. MORGAN
DESIGN	C. MORGAN
CHECKED	M. TARIN
DATE	5/8/14

SUBMITTED: MANNY TARIN

APPROVED FOR RELEASE: ED ARTIGLIA

Los Alamos NATIONAL LABORATORY PO Box 1663 Los Alamos, New Mexico 87545

SHEET C-1010

17 OF 434

CLASSIFICATION | REVIEWER | DATE

PROJECT ID 100761 | DRAWING NO C55864 | REV 0

File Location: P:_TECHNOLOGY\60239631 - RLWTF\500 CAD\502 CAD DIRECTORY\AECOM\LLW FACILITY\C\SHEET\55864-C-1010-RD.DWG
Plotted By: MORGAN, CHRIS; Plot Date: Wednesday, May 07, 2014

12068

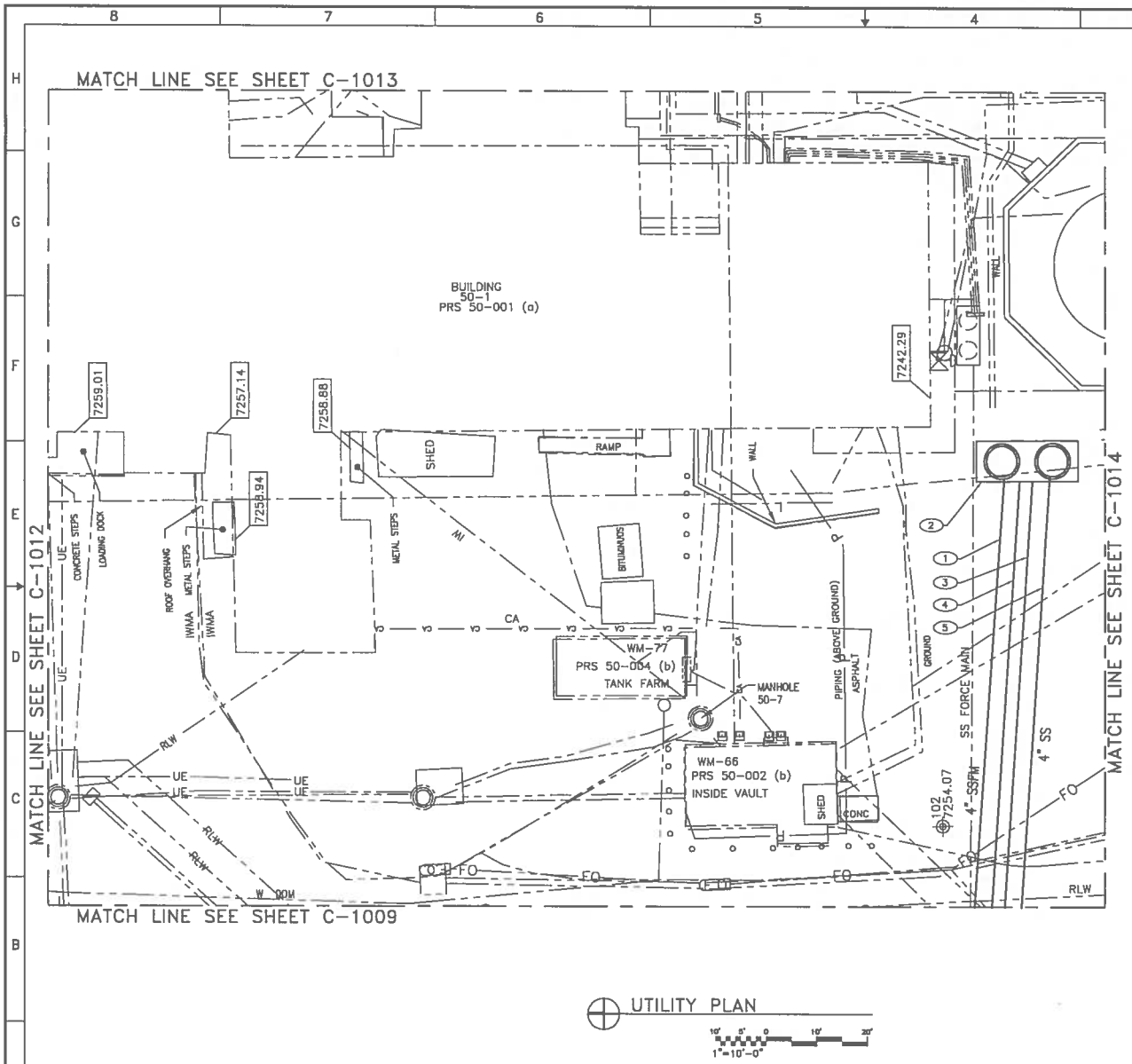

UTILITY PLAN

1"=10'-0"

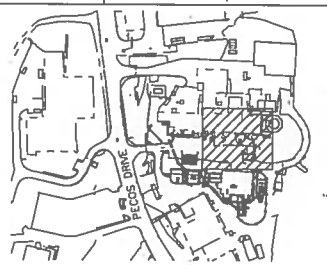

KEY PLAN
SCALE: NONE

GENERAL NOTES

1. IF THIS SHEET IS NOT 24"X 36" THEN IT IS A REDUCED PLOT. USE GRAPHIC SCALE ACCORDINGLY.
2. SUBCONTRACTOR SHALL FIELD VERIFY EXISTING UTILITIES PRIOR TO BEGINNING CONSTRUCTION.
3. SEE DETAIL 2, SHEET C-5008 FOR TYPICAL TRENCHING DETAIL.
4. ELECTRICAL AND TELECOMMUNICATIONS UTILITIES ARE SHOWN FOR COORDINATION ONLY, REFER TO ELECTRICAL SITE PLANS FOR CONSTRUCTION INFORMATION.
5. SEE SHEET C-5008 FOR UNDERGROUND UTILITY CLEARANCES AND UTILITY MINIMUM PIPE DEPTHS.

KEYED NOTES

(1) NEW 4" SANITARY SEWER FORCE MAIN, SEE SHEET C-1027.
(2) NEW SANITARY SEWER LIFT STATION, SEE SHEET C-5002 FOR DETAILS.
(3) TELEPHONE LINE AND FCS ALARMS TO LIFT STATION.
(4) LOW VOLTAGE CONTROL SIGNALS TO LIFT STATION.
(5) NEW SANITARY SEWER SERVICE, SEE SHEET C-1028.

NO	DATE	CLASS REV	ADC	DESCRIPTION	DWN	DES	CHKD	SUB	APP

AECOM

RLWTF-UP LOW LEVEL WASTE SUBPROJECT

UTILITY PLAN

DRAWN	C. MORGAN
DESIGN	C. MORGAN
CHECKED	M. TARIN
DATE	5/8/14

BLDG. 230 TA-50

SUBMITTED MANNY TARIN

APPROVED FOR RELEASE ED ARTEAGA

Los Alamos NATIONAL LABORATORY PO Box 1663 Los Alamos, New Mexico 87545

SHEET C-1011

18 OF 434

CLASSIFICATION REVIEWER DATE

PROJECT ID 100761

DRAWING NO C55864

REV 0

69021 :

File Location: P:_TECHNOLOGY\69239831 - RLWTF\300 DATA\302 CAD DIRECTORY\AECOM\LLW FACILITY\CVSHEETS\55864-C-1011-RLDWG
Plotted By: BRODERMAN, DARLENE Plot Date: Tuesday, May 06, 2014

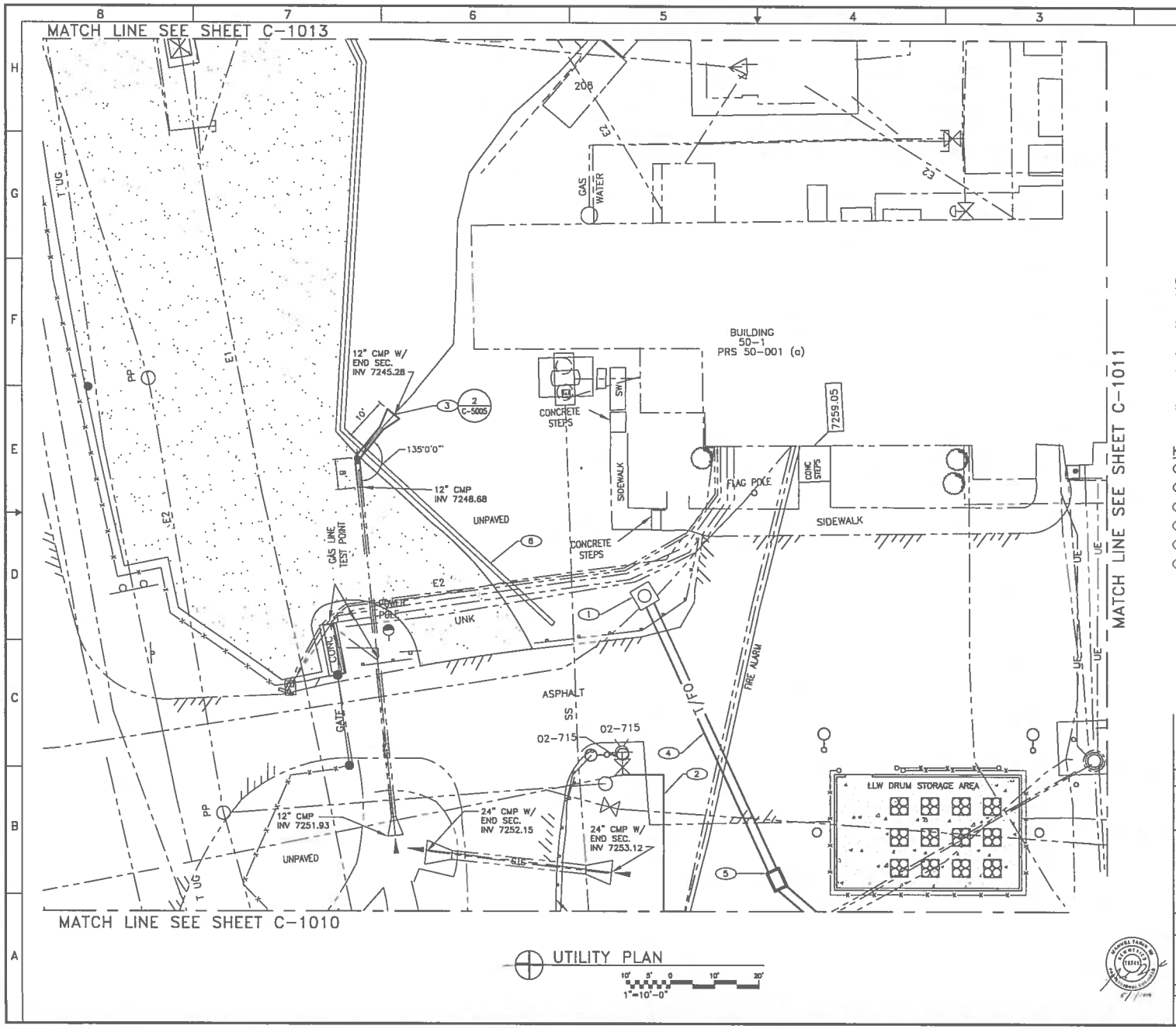

UTILITY PLAN

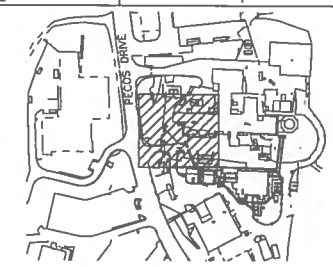

KEY PLAN
SCALE: NONE

GENERAL NOTES

1. IF THIS SHEET IS NOT 24"X 36" THEN IT IS A REDUCED PLOT. USE GRAPHIC SCALE ACCORDINGLY.
2. SUBCONTRACTOR SHALL FIELD VERIFY EXISTING UTILITIES PRIOR TO BEGINNING CONSTRUCTION.
3. SEE DETAIL 2, SHEET C-5008 FOR TYPICAL TRENCHING DETAIL.
4. ELECTRICAL AND TELECOMMUNICATIONS UTILITIES ARE SHOWN FOR COORDINATION ONLY, REFER TO ELECTRICAL SITE PLANS FOR CONSTRUCTION INFORMATION.
5. SEE SHEET C-5008 FOR UNDERGROUND UTILITY CLEARANCES AND UTILITY MINIMUM PIPE DEPTHS.

KEYED NOTES

1. EXISTING COMMUNICATIONS MANHOLE.
2. NEW 8" WATER PIPE, SEE SHEET C-1035.
3. EXTEND EXISTING 12" CULVERT AND ADD END SECTION.
4. NEW F/O COMMUNICATIONS DUCT BANK, SEE SHEET C-1032.
5. NEW COMMUNICATIONS HANDHOLE, SEE SHEET E-1000.
6. NEW RETAINING WALL.

NO	DATE	CLASS REV	ADC	DESCRIPTION	DWN	DES	CHKD	SUB	APP

AECOM

RLWTF-UP LOW LEVEL WASTE SUBPROJECT

UTILITY PLAN

BLDG. 230 TA-50

DRAWN	C. MORGAN
DESIGN	C. MORGAN
CHECKED	M. TARIN
DATE	5/8/14

SUBMITTED: MANNY TARIN

APPROVED FOR RELEASE: ED ARTIGLIA

Los Alamos NATIONAL LABORATORY PO Box 1663 Los Alamos, New Mexico 87545

SHEET C-1012

19 OF 434

CLASSIFICATION | REVIEWER | DATE

PROJECT ID 100761 | DRAWING NO C55864 | REV 0

File Location: P:_TECHNOLOGY\60239831 - RLWTF\500 CAD\502 CAD DIRECTORY\AECOM\LLW FACILITY\C\SHEET\55864-C-1012-R0.DWG
Plotted By: BROERMAN, DARLENE; Plot Date: Tuesday, May 06, 2014

: 12070

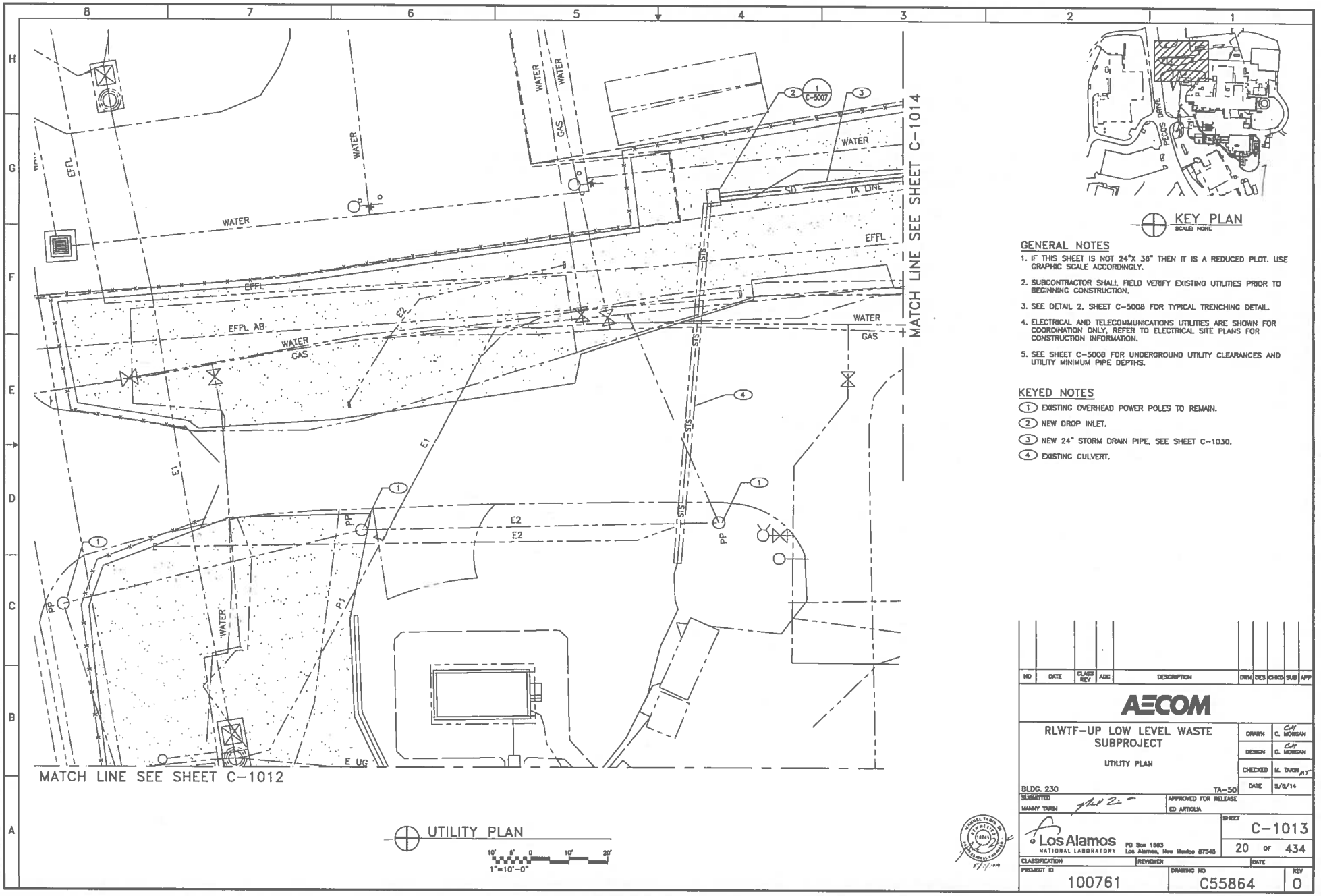

UTILITY PLAN

1"=10'-0"

KEY PLAN
SCALE: NONE

GENERAL NOTES

1. IF THIS SHEET IS NOT 24"X 36" THEN IT IS A REDUCED PLOT. USE GRAPHIC SCALE ACCORDINGLY.
2. SUBCONTRACTOR SHALL FIELD VERIFY EXISTING UTILITIES PRIOR TO BEGINNING CONSTRUCTION.
3. SEE DETAIL 2, SHEET C-5008 FOR TYPICAL TRENCHING DETAIL.
4. ELECTRICAL AND TELECOMMUNICATIONS UTILITIES ARE SHOWN FOR COORDINATION ONLY, REFER TO ELECTRICAL SITE PLANS FOR CONSTRUCTION INFORMATION.
5. SEE SHEET C-5008 FOR UNDERGROUND UTILITY CLEARANCES AND UTILITY MINIMUM PIPE DEPTHS.

KEYED NOTES

1. EXISTING OVERHEAD POWER POLES TO REMAIN.
2. NEW DROP INLET.
3. NEW 24" STORM DRAIN PIPE, SEE SHEET C-1030.
4. EXISTING CULVERT.

NO	DATE	CLASS REV	ADC	DESCRIPTION	DWN	DES	CHKD	SUB	APP

AECOM

RLWTF-UP LOW LEVEL WASTE SUBPROJECT

UTILITY PLAN

DRAWN	C. MORGAN
DESIGN	C. MORGAN
CHECKED	M. TARIN
DATE	5/8/14

BLDG. 230 TA-50

SUBMITTED MANNY TARIN

APPROVED FOR RELEASE ED ARTIOLIA

Los Alamos NATIONAL LABORATORY PO Box 1663 Los Alamos, New Mexico 87545

SHEET C-1013

20 OF 434

CLASSIFICATION | REVIEWER | DATE

PROJECT ID 100761 | DRAWING NO C55864 | REV 0

File Location: P:_TECHNOLOGY\(60238631) - RLWTF\CAD CAD\SEE CAD DIRECTORY\DESIGN\LIFF FACILITY\C\SHEET\55864-C-1013-RELDWG
Plotted By: BROCKHAM, DARELENE Plot Date: Tuesday, May 06, 2014

121071

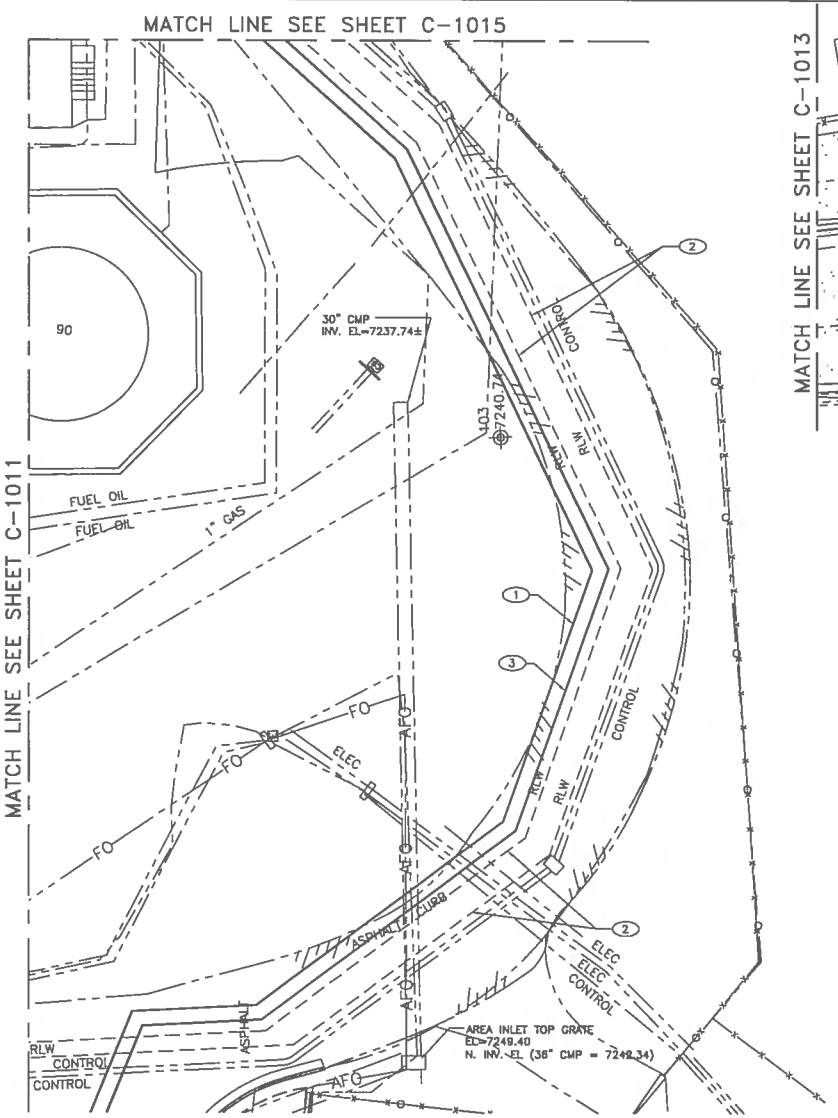

UTILITY PLAN

1"=10'-0"

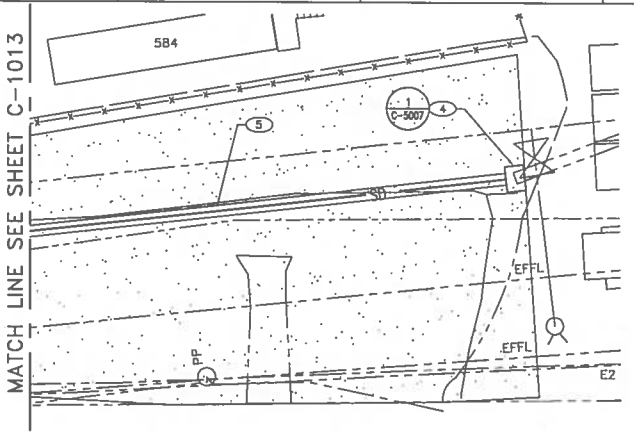

UTILITY PLAN

1"=10'-0"

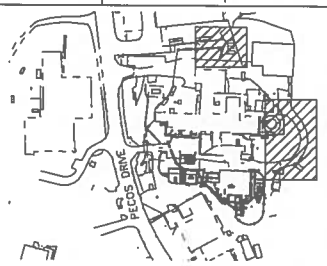

KEY PLAN

SCALE: NONE

GENERAL NOTES

1. IF THIS SHEET IS NOT 24"X 36" THEN IT IS A REDUCED PLOT. USE GRAPHIC SCALE ACCORDINGLY.
2. SUBCONTRACTOR SHALL FIELD VERIFY EXISTING UTILITIES PRIOR TO BEGINNING CONSTRUCTION.
3. SEE DETAIL 2, SHEET C-5008 FOR TYPICAL TRENCHING DETAIL.
4. ELECTRICAL AND TELECOMMUNICATIONS UTILITIES ARE SHOWN FOR COORDINATION ONLY, REFER TO ELECTRICAL SITE PLANS FOR CONSTRUCTION INFORMATION.
5. SEE SHEET C-5008 FOR UNDERGROUND UTILITY CLEARANCES AND UTILITY MINIMUM PIPE DEPTHS.

KEYED NOTES

1. NEW 3" EFFLUENT LINE, SEE SHEET C-1031.
2. EXISTING RADIOACTIVE LOW LEVEL LIQUID WASTE LINE.
3. NEW DOUBLE WALLED FIRE WATER/PROCESS DRAIN LINE, SEE SHEET C-1038.
4. NEW DROP INLET.
5. NEW STORM DRAIN PIPE, SEE SHEET C-1030.

NO	DATE	CLASS REV	ADC	DESCRIPTION	DWN	DES	CHKD	SUB	APP

AECOM

RLWTF-UP LOW LEVEL WASTE SUBPROJECT

UTILITY PLAN

BLDG. 230 TA-50

DRAWN	C. MORGAN
DESIGN	C. MORGAN
CHECKED	M. TARIN
DATE	5/8/14

SUBMITTED: MANNY TARIN

APPROVED FOR RELEASE: ED ARTIGLIA

Los Alamos NATIONAL LABORATORY, PO Box 1663, Los Alamos, New Mexico 87545

SHEET C-1014

21 OF 434

CLASSIFICATION | REVIEWER | DATE

PROJECT ID 100761 | DRAWING NO C55864 | REV 0

File Location: P:_TECHNOLOGY\60239831 - RLWTF\500 CAD\502 CAD DIRECTORY\AECOM\LLW FACILITY\C\SHEET\55864-C-1014-R0.DWG
Plotted By: BROERMAN, DARLENE; Plot Date: Tuesday, May 06, 2014

12072

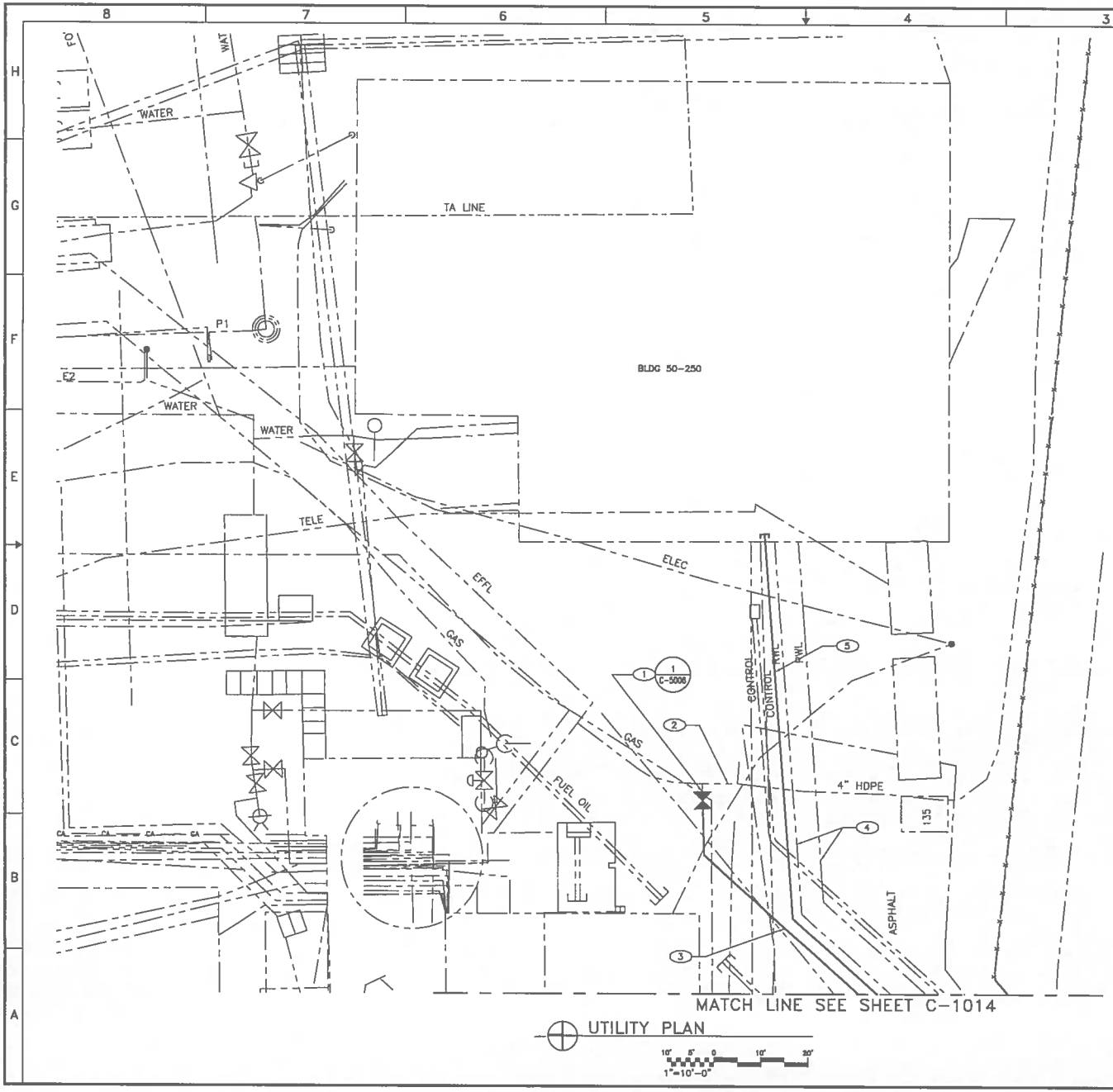

UTILITY PLAN

1"=10'-0"

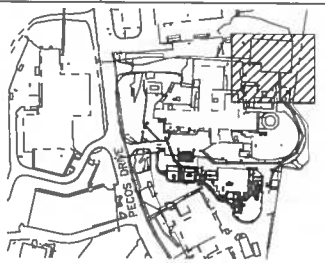

KEY PLAN
SCALE: NONE

GENERAL NOTES

1. IF THIS SHEET IS NOT 24"X 36" THEN IT IS A REDUCED PLOT. USE GRAPHIC SCALE ACCORDINGLY.
2. SUBCONTRACTOR SHALL FIELD VERIFY EXISTING UTILITIES PRIOR TO BEGINNING CONSTRUCTION.
3. SEE DETAIL 2, SHEET C-5008 FOR TYPICAL TRENCHING DETAIL.
4. ELECTRICAL AND TELECOMMUNICATIONS UTILITIES ARE SHOWN FOR COORDINATION ONLY, REFER TO ELECTRICAL SITE PLANS FOR CONSTRUCTION INFORMATION.
5. SEE SHEET C-5008 FOR UNDERGROUND UTILITY CLEARANCES AND UTILITY MINIMUM PIPE DEPTHS.

KEYED NOTES

(1) EXISTING VALVE, FINAL CONNECTION TO BE MADE BY LANL.
(2) EXISTING ZERO LIQUID DISCHARGE.
(3) NEW 3" EFFLUENT LINE, SEE SHEET C-1031.
(4) EXISTING LOW LEVEL LIQUID WASTE LINE.
(5) NEW DOUBLE WALLED 8"/12" P.I.P. FIRE WATER/PROCESS DRAIN LINE, SEE SHEET C-1038.

NO	DATE	CLASS REV	ADC	DESCRIPTION	DWN	DES	CHKD	SUB	APP

AECOM

RLWTF-UP LOW LEVEL WASTE SUBPROJECT

UTILITY PLAN

BLDG. 230 TA-50

DRAWN	C. MORGAN
DESIGN	C. MORGAN
CHECKED	M. TARIN
DATE	5/8/14

SUBMITTED MANNY TARIN

APPROVED FOR RELEASE ED ARTIOLA

Los Alamos NATIONAL LABORATORY PO Box 1663 Los Alamos, New Mexico 87545

SHEET C-1015

22 OF 434

CLASSIFICATION REVIEWER DATE

PROJECT ID 100761 DRAWING NO C55864 REV 0

eWORKT
Plotted By: BRADSHAW, DARLENE Plot Date: Tuesday, May 06, 2014
C:\Users\dbradsha\Desktop\Working Files\RLWTF\UG CAD\UG SHEETS\RLWTF FACILITY\C-1015-RELEASE.dgn

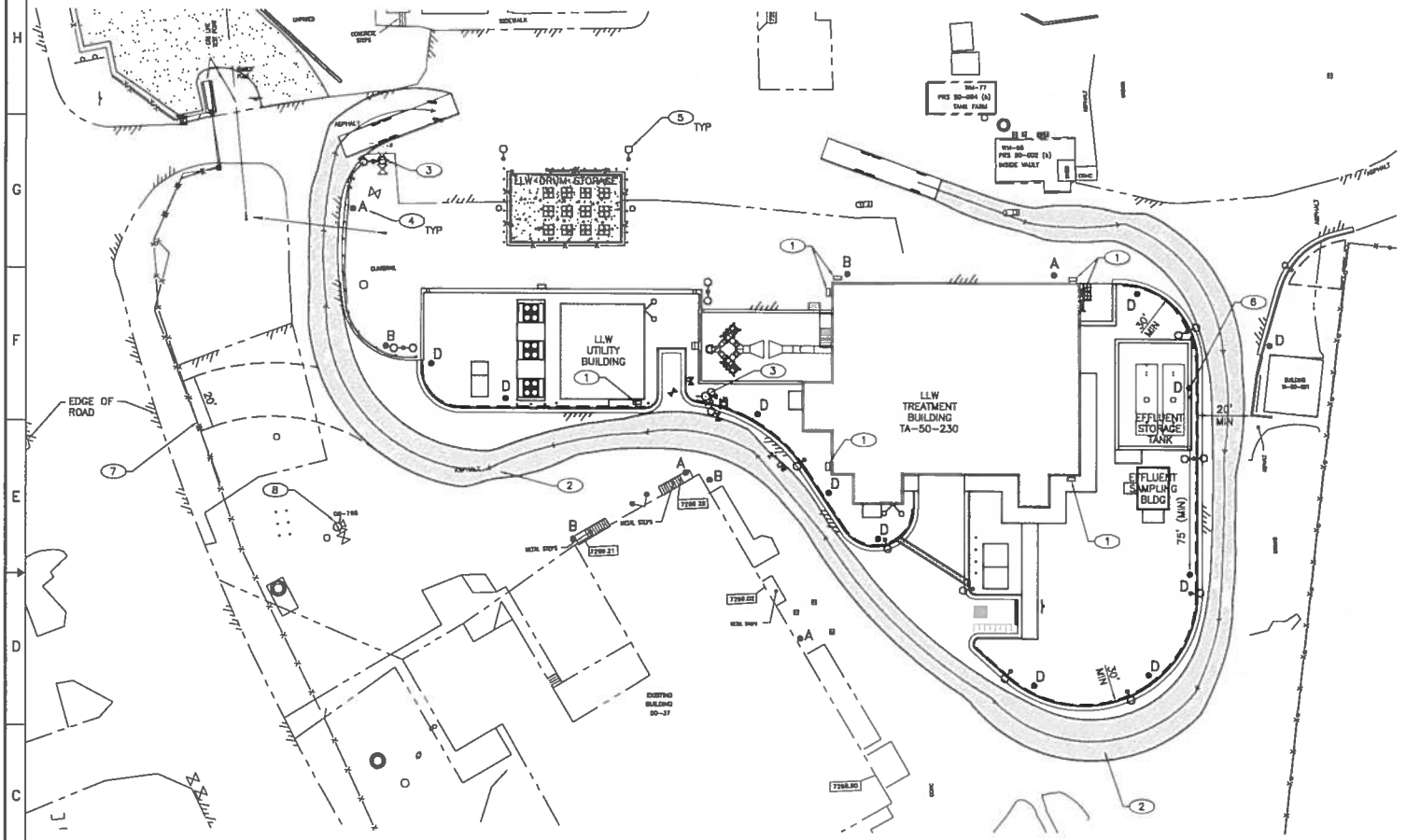

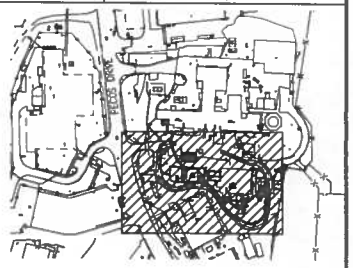

KEY PLAN
SCALE: NONE

GENERAL NOTES

1. IF THIS SHEET IS NOT 24"X 36" THEN IT IS A REDUCED PLOT. USE GRAPHIC SCALE ACCORDINGLY.

KEYED NOTES

1. SUBCONTRACTOR SHALL COORDINATE WITH LANL PRIOR TO INSTALLING ALL EXTERIOR BUILDING I.D. SIGNS. REFER TO SHEET A-5105 FOR INSTALLATION DETAILS.
2. VEHICLE TRAVEL PATH.
3. FIRE HYDRANTS.
4. INSTALL FIRE LANE SIGNS AS INDICATED. SIGNS TO BE INSTALLED 7 FEET ABOVE ROAD.
5. POLE MOUNTED LIGHTING, SEE SHEET E-1002.
6. MOUNT SIGN TO WALL.
7. EXISTING GATES CAN BE USED FOR ACCESS.
8. FIRE HYDRANT SHALL REMAIN ACCESSIBLE AT ALL TIMES.

INTERNATIONAL FIRE CODE (IFC) 2006 EDITION APPENDIX D. D103.6 SIGNS. WHERE REQUIRED BY THE FIRE CODE OFFICIAL, FIRE APPARATUS ACCESS ROADS SHALL BE MARKED WITH PERMANENT "NO PARKING---FIRE LANE" SIGNS COMPLYING WITH FIGURE D103.6. SIGNS SHALL HAVE A MINIMUM DIMENSION OF 12 INCHES (305 MM) WIDE BY 18" INCHES (457 MM) HIGH AND HAVE RED LETTERS ON A WHITE REFLECTIVE BACKGROUND. SIGNS SHALL BE POSTED ON ONE OR BOTH SIDES OF THE FIRE APPARATUS ROAD AS REQUIRED BY SECTION D103.6.1 OR D103.6.2.

SIGN TYPE "A" SIGN TYPE "B" SIGN TYPE "D"

DESIGNATED TO BE PAINTED RED

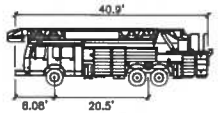

100 foot ladder truck

Width	: 8.0'
Track	: 8.0'
Lock to Lock Time	: 6.0
Steering Angle	: 40.0

FIRE LANE PLAN
1"=20'-0"

NO	DATE	CLASS REV	ADC	DESCRIPTION	DWN	DES	CHKD	SUB	APP

AECOM

RLWTF-UP LOW LEVEL WASTE SUBPROJECT

FIRE LANE PLAN

BLDG. 230 TA-50

DRAWN	C. MORGAN
DESIGN	C. MORGAN
CHECKED	M. TARIN
DATE	8/8/14

SUBMITTED MANNY TARIN

APPROVED FOR RELEASE ED ARTIGLIA

Los Alamos NATIONAL LABORATORY PO Box 1663 Los Alamos, New Mexico 87545

SHEET C-1016

23 OF 434

CLASSIFICATION REVIEWER DATE

PROJECT ID 100761

DRAWING NO C55864

REV 0

File Location: P:_TECHNOLOGY\WORKSET - ELWTF\505 CAP\502 DGN DIRECTORY\WORKSET (FACILITY)\SHEET\55864-C-1016-RLDWG
Plotted By: BROADMAN, DARLENE; Plot Date: Tuesday, May 06, 2014

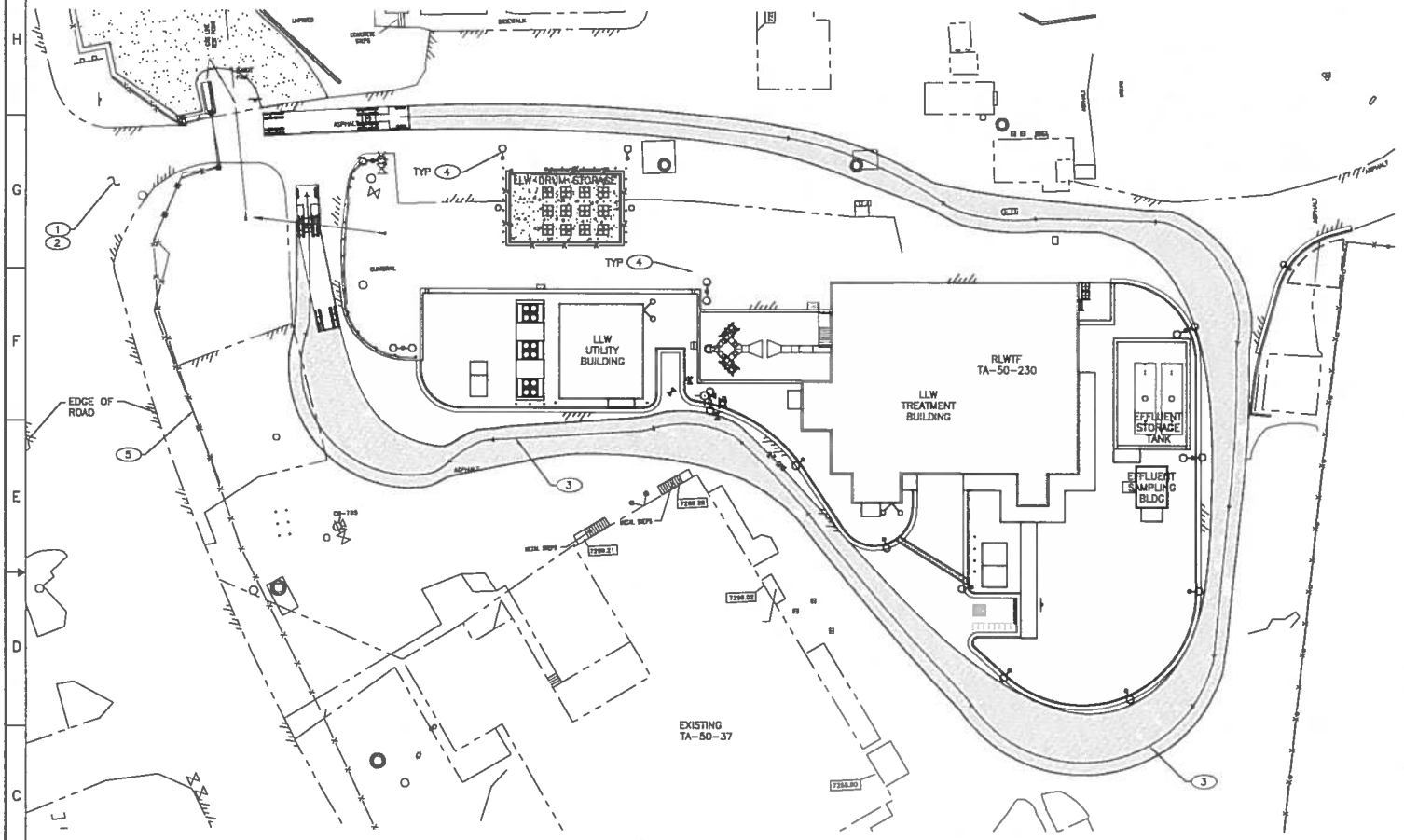

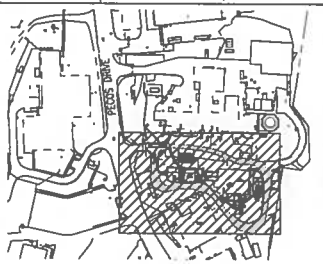

KEY PLAN
SCALE: NONE

GENERAL NOTES

1. IF THIS SHEET IS NOT 24"X 36" THEN IT IS A REDUCED PLOT. USE GRAPHIC SCALE ACCORDINGLY.
2. SEE SPECIFICATION 015705.

CONSTRUCTION TRAFFIC CONTROL GENERAL NOTES

1. ALL CONSTRUCTION TRAFFIC CONTROL DEVICES SHALL COMPLY TO THE MANUAL ON UNIFORM TRAFFIC CONTROL DEVICES (MUTCD), LATEST EDITION. IT IS THE RESPONSIBILITY OF THE CONTRACTOR TO INSTALL, SERVICE AND MAINTAIN ALL TRAFFIC CONTROL DEVICES. TRAFFIC CONTROL DEVICES SHALL NOT BE REMOVED OR ALTERED IN ANY WAY WITHOUT THE APPROVAL OF STR, PER SECTION 6A-4 OF THE MUTCD, LATEST EDITION.
2. SUBCONTRACTOR IS RESPONSIBLE TO MAINTAIN AND SERVICE ALL TRAFFIC CONTROL DEVICES 24 HOURS A DAY, 7 DAYS A WEEK THROUGHOUT LENGTH OF PROJECT. SUBCONTRACTOR IS RESPONSIBLE THAT ALL TRAFFIC CONTROL DEVICES COMPLY WITH THE MUTCD, LATEST EDITION.
3. EQUIPMENT OR MATERIALS SHALL NOT BE STORED WITHIN 15 FEET OF A TRAVELED TRAFFIC LANE DURING NON-WORKING HOURS WITHOUT THE APPROVAL OF STR.
4. SUBCONTRACTOR SHALL PROVIDE AND MAINTAIN A SAFE AND ADEQUATE MEANS OF CHANNELIZING PEDESTRIAN TRAFFIC AROUND AND THROUGH THE CONSTRUCTION AREA.
5. SUBCONTRACTOR SHALL MAINTAIN ACCESS TO ALL FACILITIES AT ALL TIMES.
6. SUBCONTRACTOR SHALL PROVIDE ACCESS SIGNS FOR FACILITIES LOCATED WITHIN THE CONSTRUCTION AREA UNDER THE SUPERVISION OF STR.
7. ALL ADVANCE WARNING SIGNS SHALL MEET THE MINIMUM REFLECTIVE INTENSITY REQUIREMENTS SET FORTH BY LANL. STR SHALL DETERMINE ALL REQUIREMENTS AND APPROVE OR DISAPPROVE ANY ADVANCE WARNING SIGN PER SECTION 6A-4 OF THE MUTCD, LATEST EDITION.
8. ANY FIELD ADJUSTMENTS SHALL BE APPROVED BY STR.

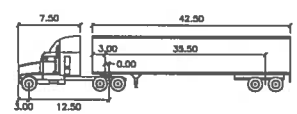

WB-50 feet

Tractor Width	: 8.00	Lock to Lock Time	: 6.0
Trailer Width	: 8.50	Steering Angle	: 17.7
Tractor Track	: 8.00	Articulating Angle	: 70.0
Trailer Track	: 8.50		

VEHICLE MOVEMENT PLAN
20' 10' 0 10' 20'
1"=20'-0"

KEYED NOTES

1. THE EXISTING INTERSECTION ROADWAY MUST BE OPEN AT ALL TIMES IN ORDER TO ALLOW LARGE SEMI VEHICLES ACCESS TO THE SITE.
2. MAIN ACCESS ROAD TO THE SITE FOR CONSTRUCTION VEHICLES.
3. VEHICLE TRAVEL PATH.
4. POLE MOUNTED LIGHTING.
5. EXISTING GATES CAN BE USED FOR ACCESS.

NO	DATE	CLASS REV	ADC	DESCRIPTION	DWN	DES	CHKD	SUB	APP

AECOM

RLWTF-UP LOW LEVEL WASTE SUBPROJECT

VEHICLE MOVEMENT PLAN

BLDG. 230 TA-50

DRAWN	C. MORGAN
DESIGN	C. MORGAN
CHECKED	M. TARIN
DATE	5/8/14

SUBMITTED: MANNY TARIN
APPROVED FOR RELEASE: ED ARTIGLIA

Los Alamos NATIONAL LABORATORY
PO Box 1663 Los Alamos, New Mexico 87545

SHEET C-1017
24 OF 434

CLASSIFICATION | REVIEWER | DATE

PROJECT ID 100761 | DRAWING NO C55864 | REV 0

File Location: P:_TECHNOLOGY\B0230831 - RLWTF\CAD CAD\SIZE CAD DIRECTORY\AECOM\LLW FACILITY\C\SHEET\C55864-C-1017-RLDWG
Plotted By: BROERMAN, DARLENE; Plot Date: Tuesday, May 06, 2014

: 12075

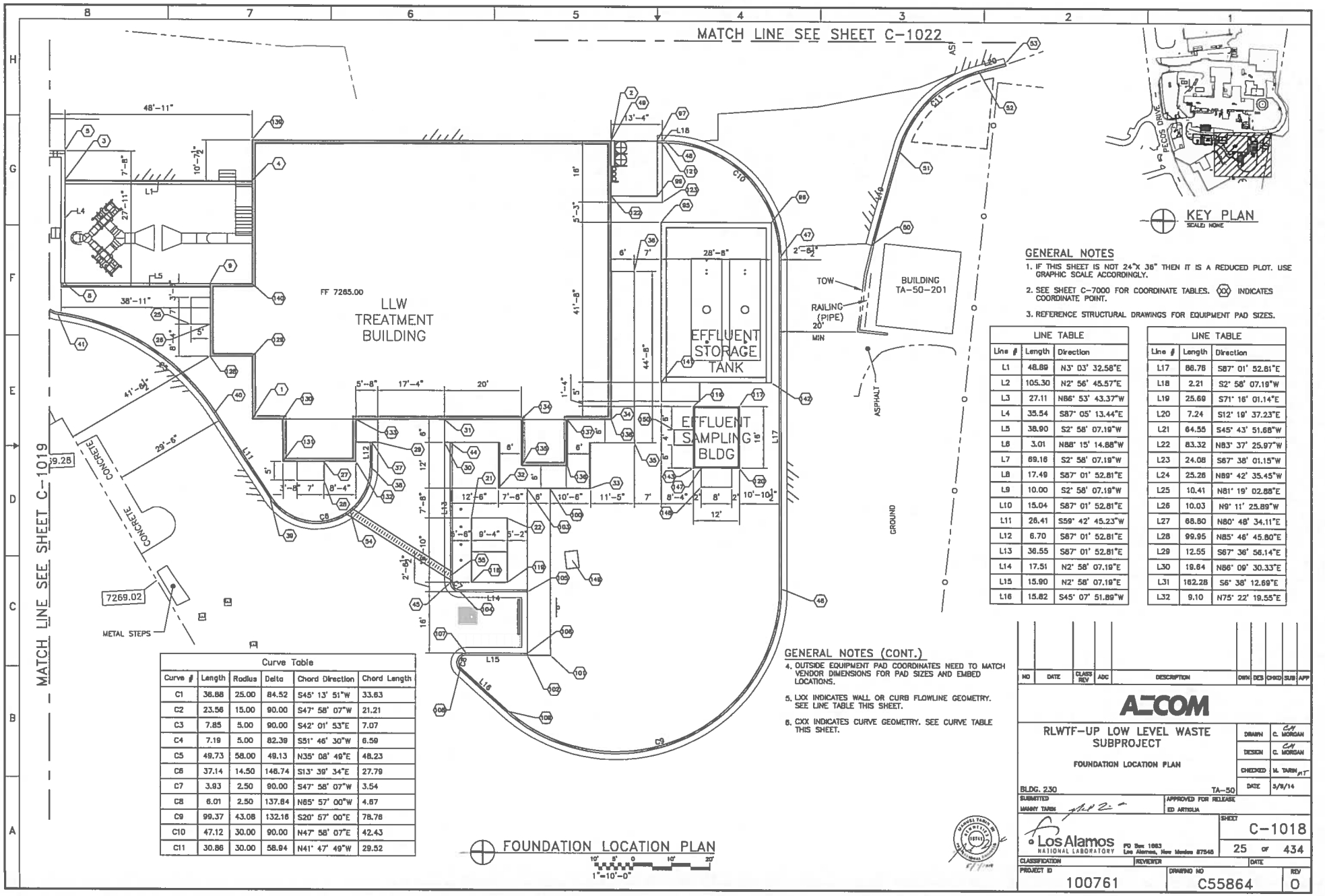

FOUNDATION LOCATION PLAN

1"=10'-0"

KEY PLAN
SCALE: NONE

GENERAL NOTES

1. IF THIS SHEET IS NOT 24"X 36" THEN IT IS A REDUCED PLOT. USE GRAPHIC SCALE ACCORDINGLY.
2. SEE SHEET C-7000 FOR COORDINATE TABLES. ⟨XX⟩ INDICATES COORDINATE POINT.
3. REFERENCE STRUCTURAL DRAWINGS FOR EQUIPMENT PAD SIZES.

LINE TABLE		
Line #	Length	Direction
L1	48.89	N3° 03' 32.58"E
L2	105.30	N2° 56' 45.57"E
L3	27.11	N86° 53' 43.37"W
L4	35.54	S87° 05' 13.44"E
L5	38.90	S2° 58' 07.19"W
L6	3.01	N88° 15' 14.88"W
L7	89.16	S2° 58' 07.19"W
L8	17.49	S87° 01' 52.81"E
L9	10.00	S2° 58' 07.19"W
L10	15.04	S87° 01' 52.81"E
L11	26.41	S59° 42' 45.23"W
L12	6.70	S87° 01' 52.81"E
L13	36.55	S87° 01' 52.81"E
L14	17.51	N2° 58' 07.19"E
L15	15.90	N2° 58' 07.19"E
L16	15.82	S45° 07' 51.89"W

LINE TABLE		
Line #	Length	Direction
L17	86.76	S87° 01' 52.81"E
L18	2.21	S2° 58' 07.19"W
L19	25.69	S71° 16' 01.14"E
L20	7.24	S12° 19' 37.23"E
L21	64.55	S45° 43' 51.68"W
L22	83.32	N83° 37' 25.97"W
L23	24.08	S87° 38' 01.15"W
L24	25.26	N89° 42' 35.45"W
L25	10.41	N81° 19' 02.88"E
L26	10.03	N9° 11' 25.89"W
L27	68.80	N80° 48' 34.11"E
L28	99.95	N85° 46' 45.80"E
L29	12.55	S87° 36' 56.14"E
L30	19.64	N86° 09' 30.33"E
L31	162.28	S6° 38' 12.69"E
L32	9.10	N75° 22' 19.55"E

Curve Table					
Curve #	Length	Radius	Delta	Chord Direction	Chord Length
C1	38.88	25.00	84.52	S45° 13' 51"W	33.63
C2	23.56	15.00	90.00	S47° 58' 07"W	21.21
C3	7.85	5.00	90.00	S42° 01' 53"E	7.07
C4	7.19	5.00	82.39	S51° 46' 30"W	6.59
C5	49.73	58.00	49.13	N35° 08' 49"E	48.23
C6	37.14	14.50	146.74	S13° 39' 34"E	27.79
C7	3.93	2.50	90.00	S47° 58' 07"W	3.54
C8	6.01	2.50	137.84	N65° 57' 00"W	4.67
C9	99.37	43.08	132.16	S20° 57' 00"E	78.78
C10	47.12	30.00	90.00	N47° 58' 07"E	42.43
C11	30.86	30.00	58.94	N41° 47' 49"W	29.52

GENERAL NOTES (CONT.)

4. OUTSIDE EQUIPMENT PAD COORDINATES NEED TO MATCH VENDOR DIMENSIONS FOR PAD SIZES AND EMBED LOCATIONS.
5. LXX INDICATES WALL OR CURB FLOWLINE GEOMETRY. SEE LINE TABLE THIS SHEET.
6. CXX INDICATES CURVE GEOMETRY. SEE CURVE TABLE THIS SHEET.

NO	DATE	CLASS REV	ADC	DESCRIPTION	DWN	DES	CHKD	SUB	APP

AECOM

RLWTF-UP LOW LEVEL WASTE SUBPROJECT

FOUNDATION LOCATION PLAN

BLDG. 230 TA-50

DRAWN	C. MORGAN
DESIGN	C. MORGAN
CHECKED	M. TARIN
DATE	5/9/14

SUBMITTED: MANNY TARIN

APPROVED FOR RELEASE: ED ARTIGLIA

Los Alamos NATIONAL LABORATORY — PO Box 1663, Los Alamos, New Mexico 87545

SHEET C-1018

25 OF 434

CLASSIFICATION | REVIEWER | DATE

PROJECT ID: 100761

DRAWING NO: C55864

REV: 0

Plot Date: Wednesday, May 07, 2014
Plotted By: MORGAN, CHRIS
File: L:\engineering\...\RLWTF\CAD\102 CAD\102 CAD DIRECTORY\ACCADLLW FACILITY\CIVIL 3D\LLWTF-COORD.DWG

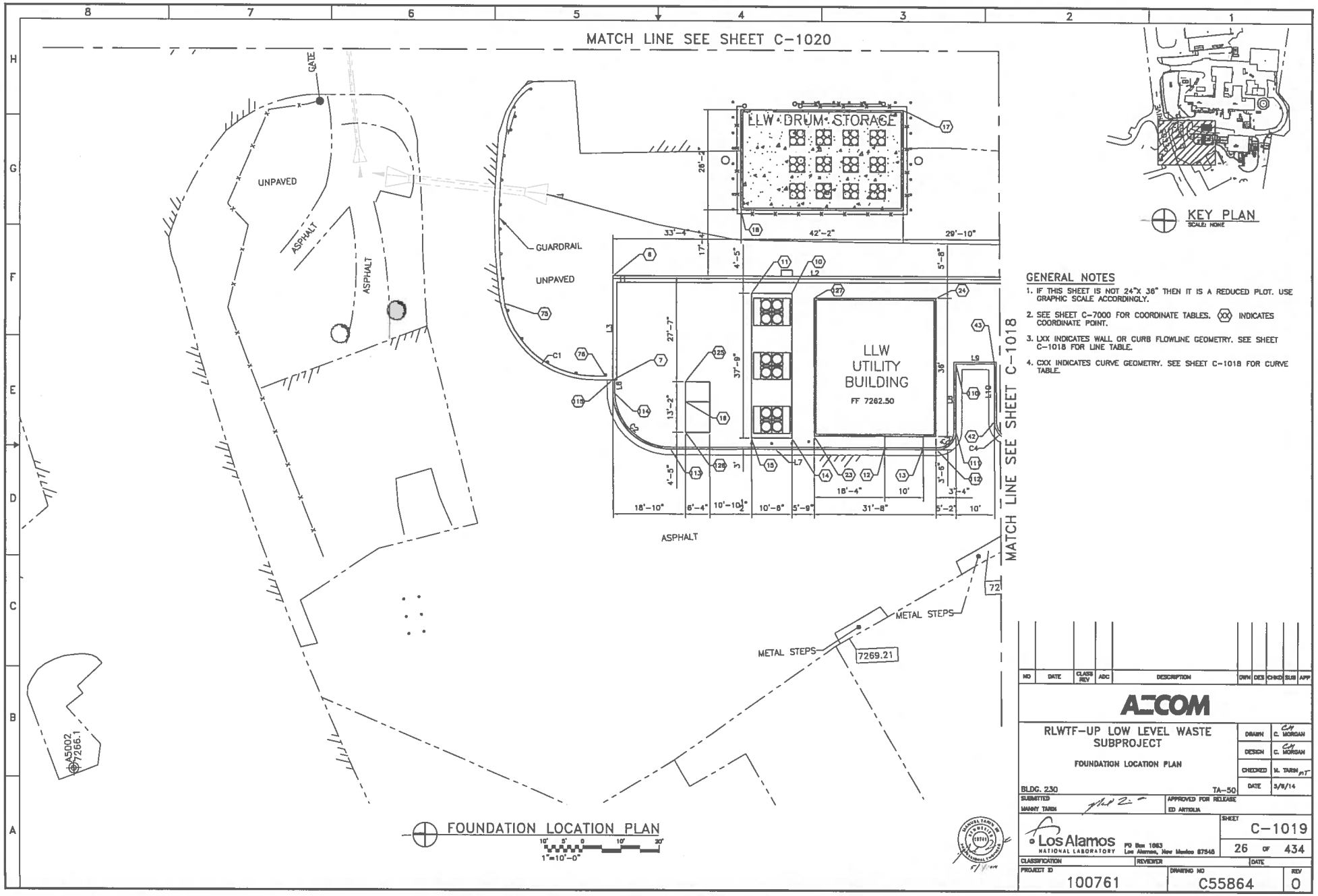

GENERAL NOTES

1. IF THIS SHEET IS NOT 24"X 36" THEN IT IS A REDUCED PLOT. USE GRAPHIC SCALE ACCORDINGLY.
2. SEE SHEET C-7000 FOR COORDINATE TABLES. (XX) INDICATES COORDINATE POINT.
3. LXX INDICATES WALL OR CURB FLOWLINE GEOMETRY. SEE SHEET C-1018 FOR LINE TABLE.
4. CXX INDICATES CURVE GEOMETRY. SEE SHEET C-1018 FOR CURVE TABLE.

NO	DATE	CLASS REV	ADC	DESCRIPTION	DRN	DES	CHKD	SUB	APP

AECOM

RLWTF-UP LOW LEVEL WASTE SUBPROJECT

FOUNDATION LOCATION PLAN

BLDG. 230 TA-50

DRAWN	C. MORGAN
DESIGN	C. MORGAN
CHECKED	M. TARIN
DATE	5/8/14

SUBMITTED: MANNY TARIN

APPROVED FOR RELEASE: ED ARTIOLA

Los Alamos NATIONAL LABORATORY — PO Box 1663, Los Alamos, New Mexico 87545

SHEET C-1019

26 OF 434

CLASSIFICATION | REVIEWER | DATE

PROJECT ID 100761 | DRAWING NO C55864 | REV 0

Plotted By: MORGAN, CHRIS; Plot Date: Wednesday, May 07, 2014
I:\RLWTF\ENGR\CAD\V2\02 CAD DIRECTORY\ACCESS\LLW FACILITY\PLOT\PLOT_SV\LWTF-COORD.DWG

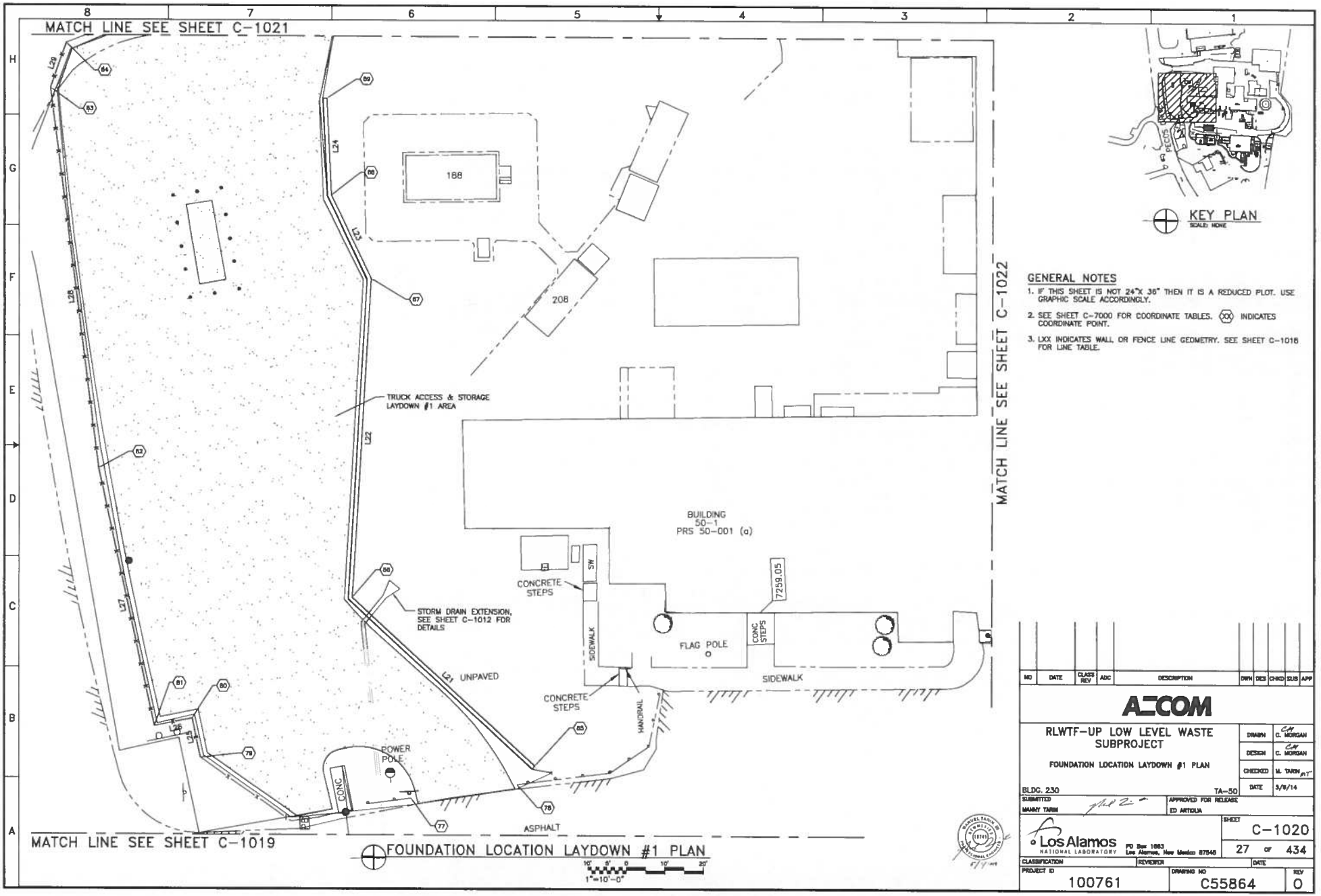

FOUNDATION LOCATION LAYDOWN #1 PLAN

1"=10'-0"

KEY PLAN
SCALE: NONE

GENERAL NOTES

1. IF THIS SHEET IS NOT 24"X 36" THEN IT IS A REDUCED PLOT. USE GRAPHIC SCALE ACCORDINGLY.
2. SEE SHEET C-7000 FOR COORDINATE TABLES. (XX) INDICATES COORDINATE POINT.
3. LXX INDICATES WALL OR FENCE LINE GEOMETRY. SEE SHEET C-1016 FOR LINE TABLE.

NO	DATE	CLASS REV	ADC	DESCRIPTION	DWN	DES	CHKD	SUB	APP

AECOM

RLWTF-UP LOW LEVEL WASTE SUBPROJECT

FOUNDATION LOCATION LAYDOWN #1 PLAN

BLDG. 230 TA-50

DRAWN	C. MORGAN
DESIGN	C. MORGAN
CHECKED	M. TARIN
DATE	3/8/14

SUBMITTED: MANNY TARIN

APPROVED FOR RELEASE: ED ARTIOLA

Los Alamos NATIONAL LABORATORY — PO Box 1663, Los Alamos, New Mexico 87545

SHEET C-1020

27 OF 434

CLASSIFICATION | REVIEWER | DATE

PROJECT ID: 100761

DRAWING NO: C55864

REV: 0

Plotted By: MORGAN, CHRIS; Plot Date: Wednesday, May 07, 2014
File Location: C:\Users\cmorgan\DOCUMENTS\CAD\LWSD CAD\LWSD CAD DIRECTORY\ADCAD\LLW FACILITY\CIVIL 3D\LWTF-C55010.DWG

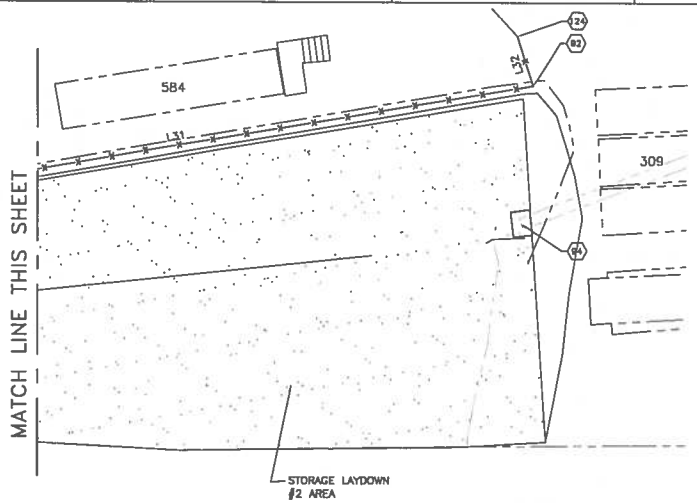

FOUNDATION LOCATION LAYDOWN #2 PLAN

10' 5' 0 10' 20'
1"=10'-0"

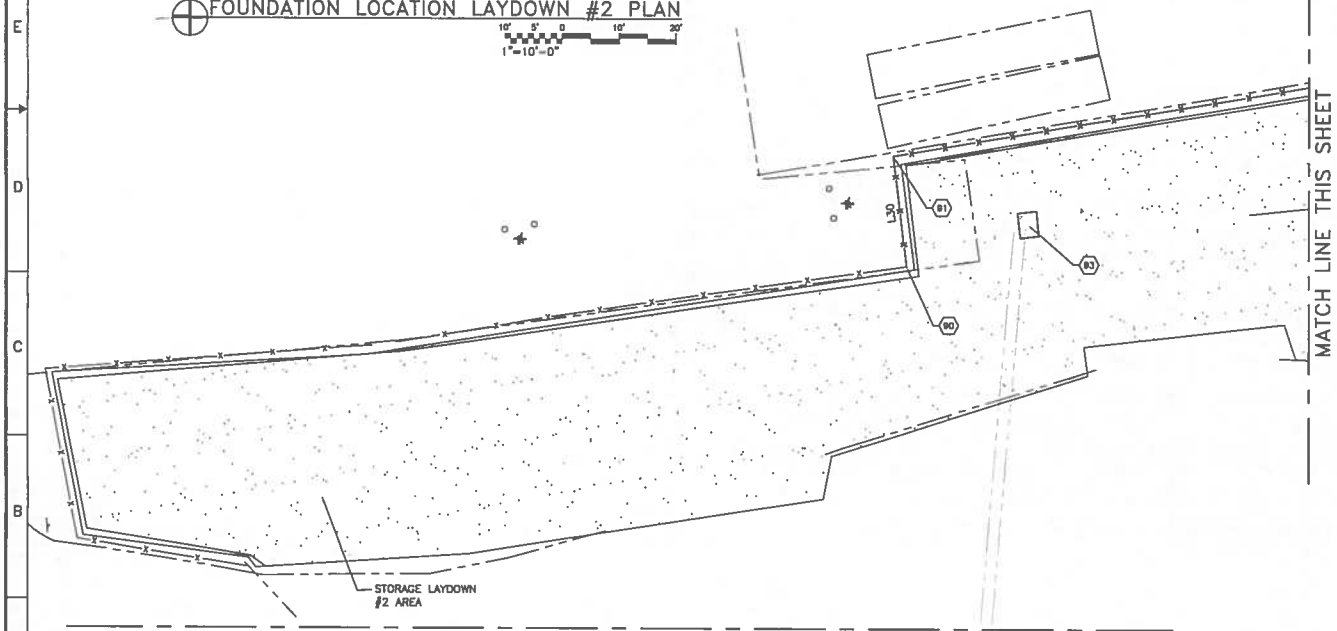

MATCH LINE SEE SHEET C-1020

FOUNDATION LOCATION LAYDOWN #2 PLAN

10' 5' 0 10' 20'
1"=10'-0"

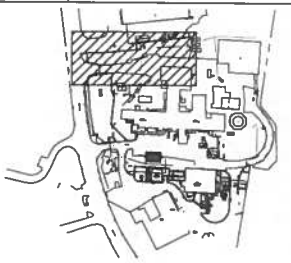

KEY PLAN
SCALE: NONE

GENERAL NOTES

1. IF THIS SHEET IS NOT 24"X 36" THEN IT IS A REDUCED PLOT. USE GRAPHIC SCALE ACCORDINGLY.
2. SEE SHEET C-7000 FOR COORDINATE TABLES. (XX) INDICATES COORDINATE POINT.
3. LXX INDICATES FENCE LINE GEOMETRY. SEE SHEET C-1018 FOR LINE TABLE.

NO	DATE	CLASS REV	ADC	DESCRIPTION	DWN	DES	CHKD	SUB	APP

AECOM

RLWTF-UP LOW LEVEL WASTE SUBPROJECT

FOUNDATION LOCATION LAYDOWN #2 PLAN

BLDG. 230 TA-50

DRAWN	C. MORGAN
DESIGN	C. MORGAN
CHECKED	M. TARIN
DATE	5/8/14

SUBMITTED MANNY TARIN

APPROVED FOR RELEASE ED ARTIOLA

Los Alamos NATIONAL LABORATORY PO Box 1663 Los Alamos, New Mexico 87545

SHEET C-1021

28 OF 434

CLASSIFICATION | REVIEWER | DATE

PROJECT ID 100761 | DRAWING NO C55864 | REV 0

SAFE
Plotted By: MORGAN, CHRIS
Plot Date: Wednesday, May 07, 2014

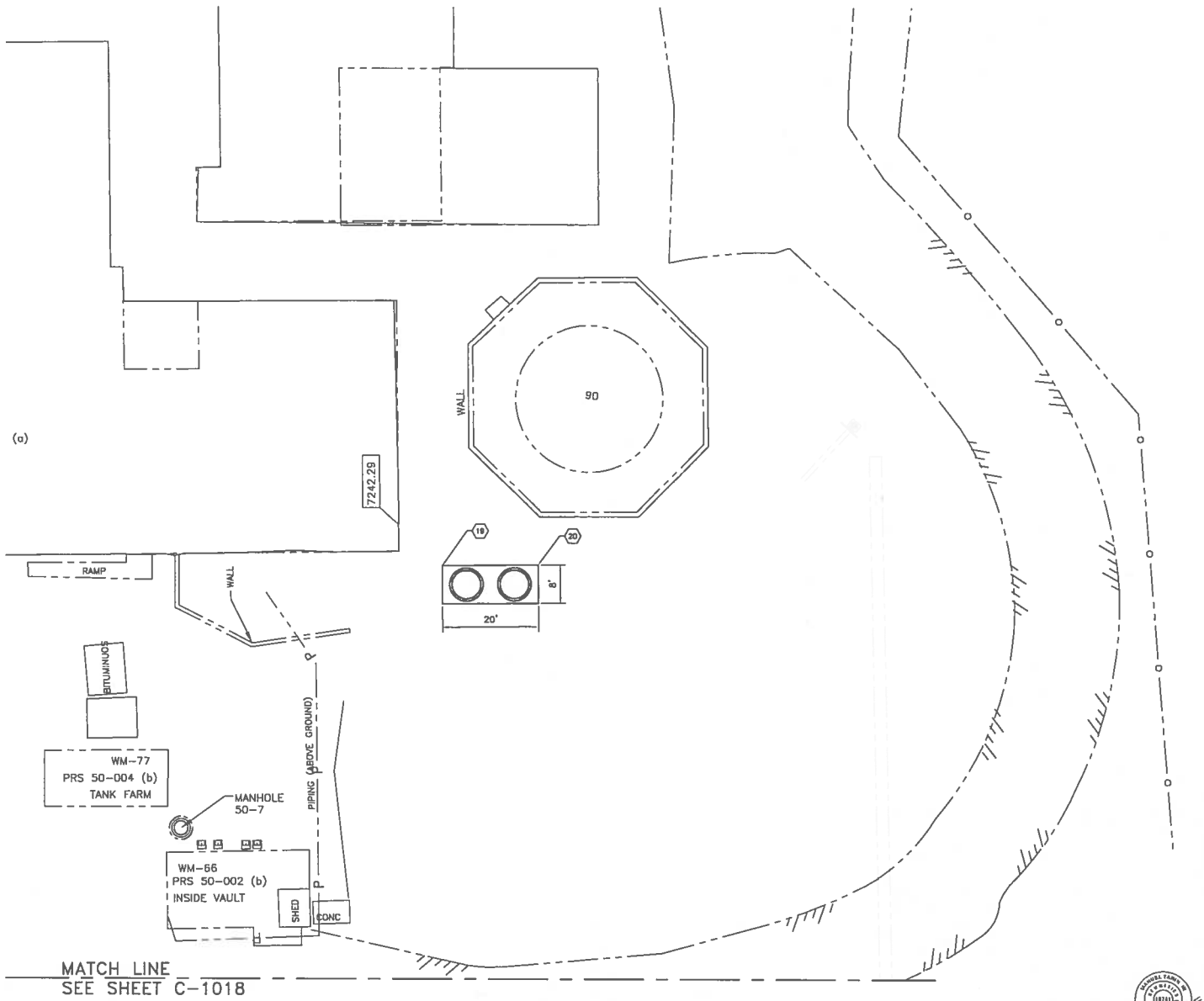

FOUNDATION LOCATION PLAN

1"=10'-0"

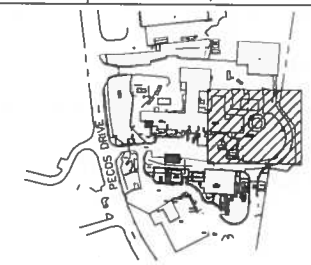

KEY PLAN

SCALE: NONE

GENERAL NOTES

1. IF THIS SHEET IS NOT 24"X 36" THEN IT IS A REDUCED PLOT. USE GRAPHIC SCALE ACCORDINGLY.
2. SEE SHEET C-7000 FOR COORDINATE TABLES. (XX) INDICATES COORDINATE POINT.

NO	DATE	CLASS REV	ADC	DESCRIPTION	DWN	DES	CHKD	SUB	APP

AECOM

RLWTF-UP LOW LEVEL WASTE SUBPROJECT

FOUNDATION LOCATION PLAN

BLDG. 230 TA-50

DRAWN	C. MORGAN
DESIGN	C. MORGAN
CHECKED	M. TARIN
DATE	5/8/14

SUBMITTED: MANNY TARIN

APPROVED FOR RELEASE: ED ARTIGLIA

Los Alamos NATIONAL LABORATORY PO Box 1663 Los Alamos, New Mexico 87545

SHEET C-1022

29 OF 434

CLASSIFICATION | REVIEWER | DATE

PROJECT ID 100761 | DRAWING NO C55864 | REV 0

DRAFT

File Location: P:\CIVIL\RLWTF\500 CAD\502 CAD DIRECTORY\AECOM\LLW FACILITY\C\CIVIL 3D\RLWTF-COORD.DWG
Plotted By: MORGAN, CHRIS; Plot Date: Wednesday, May 07, 2014

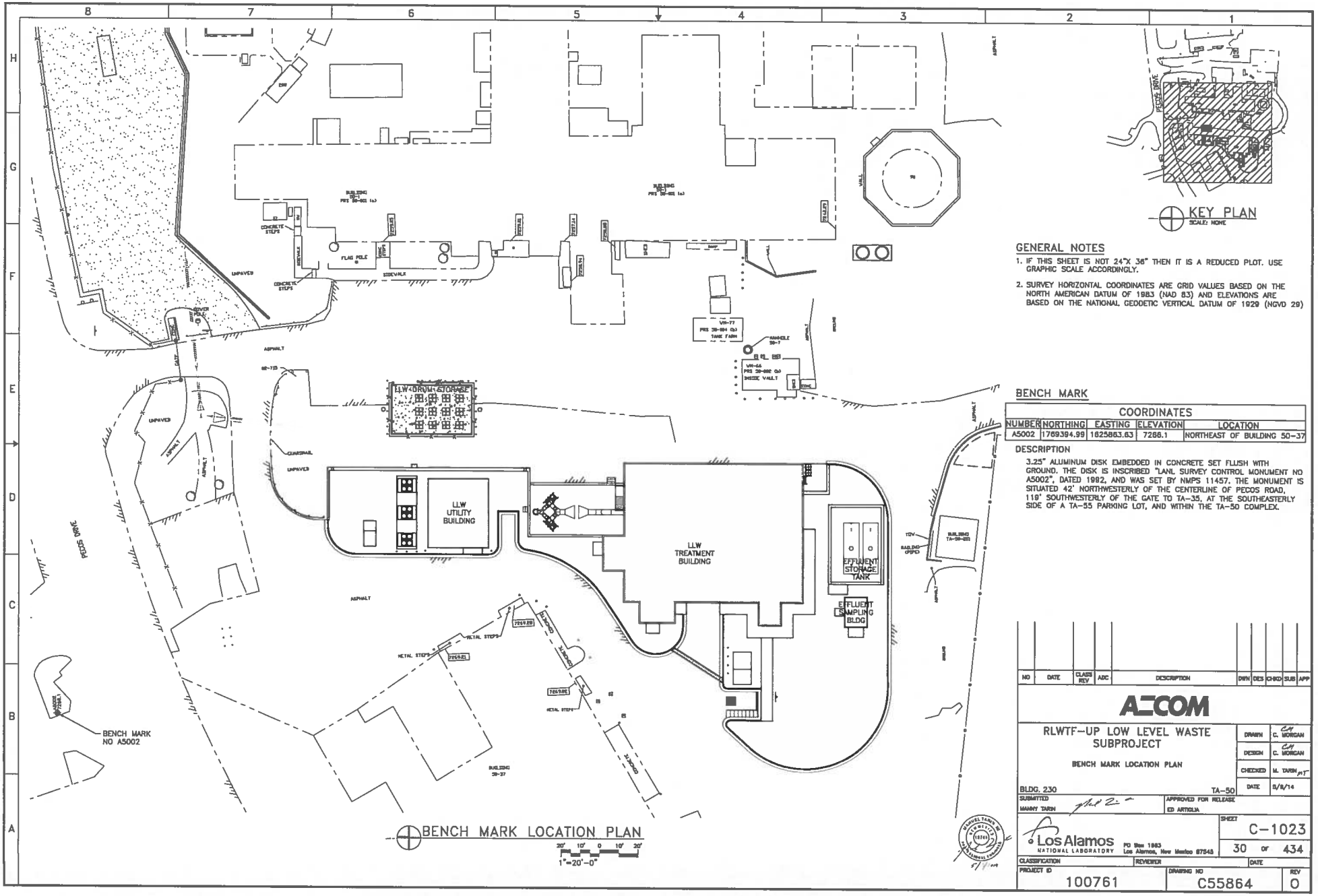

KEY PLAN
SCALE: NONE

GENERAL NOTES

1. IF THIS SHEET IS NOT 24"X 36" THEN IT IS A REDUCED PLOT. USE GRAPHIC SCALE ACCORDINGLY.
2. SURVEY HORIZONTAL COORDINATES ARE GRID VALUES BASED ON THE NORTH AMERICAN DATUM OF 1983 (NAD 83) AND ELEVATIONS ARE BASED ON THE NATIONAL GEODETIC VERTICAL DATUM OF 1929 (NGVD 29)

BENCH MARK

COORDINATES				
NUMBER	NORTHING	EASTING	ELEVATION	LOCATION
A5002	1769394.99	1625863.63	7286.1	NORTHEAST OF BUILDING 50-37

DESCRIPTION

3.25" ALUMINUM DISK EMBEDDED IN CONCRETE SET FLUSH WITH GROUND. THE DISK IS INSCRIBED "LANL SURVEY CONTROL MONUMENT NO A5002", DATED 1982, AND WAS SET BY NMPS 11457. THE MONUMENT IS SITUATED 42' NORTHWESTERLY OF THE CENTERLINE OF PECOS ROAD, 119' SOUTHWESTERLY OF THE GATE TO TA-35, AT THE SOUTHEASTERLY SIDE OF A TA-55 PARKING LOT, AND WITHIN THE TA-50 COMPLEX.

NO	DATE	CLASS REV	ADC	DESCRIPTION	DWN	DES	CHKD	SUB	APP

AECOM

RLWTF-UP LOW LEVEL WASTE SUBPROJECT

BENCH MARK LOCATION PLAN

BLDG. 230 TA-50

DRAWN	C. MORGAN	SUBMITTED	APPROVED FOR RELEASE
DESIGN	C. MORGAN	MANNY TARIN	ED ARTIGLIA
CHECKED	M. TARIN		
DATE	8/8/14		

Los Alamos NATIONAL LABORATORY PO Box 1663 Los Alamos, New Mexico 87545

SHEET C-1023

30 OF 434

CLASSIFICATION | REVIEWER | DATE

PROJECT ID 100761 | DRAWING NO C55864 | REV 0

File Location: P:_TECHNOLOGY\WORKSET - ALBUQ\SDS CAD\SDS CAD DIRECTORY\ACCESS\LLW FACILITY\PLSHEET\SDS64-C-1023-RLDWG
Plotted By: BRICKMAN, DARLENE; Plot Date: Tuesday, May 06, 2014

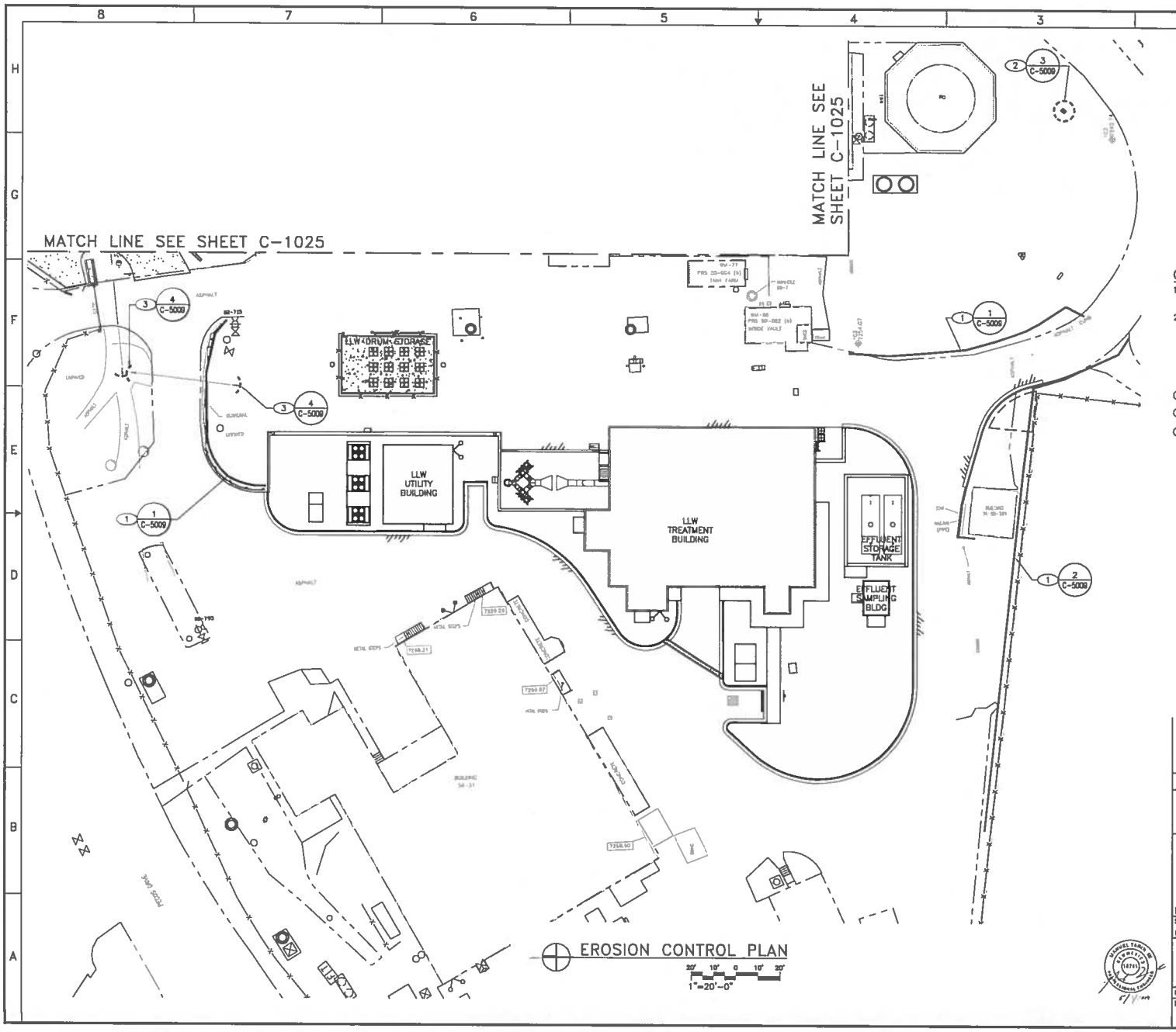

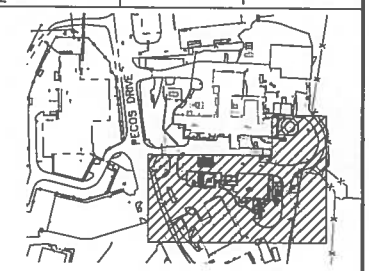

KEY PLAN
SCALE: NONE

GENERAL NOTES

1. IF THIS SHEET IS NOT 24"X 36" THEN IT IS A REDUCED PLOT. USE GRAPHIC SCALE ACCORDINGLY.
2. SEE SHEET C-5009 FOR EROSION CONTROL CONSTRUCTION NOTES.

KEYED NOTES

1. LIMITS OF EROSION CONTROL FENCING.
2. INLET SEDIMENT BARRIER.
3. STRAW TUBE BARRIER.

NO	DATE	CLASS REV	ADC	DESCRIPTION	DWN	DES	CHKD	SUB	APP

AECOM

RLWTF-UP LOW LEVEL WASTE SUBPROJECT

EROSION CONTROL PLAN

BLDG. 230 TA-50

DRAWN	C. MORGAN
DESIGN	C. MORGAN
CHECKED	M. TARIN
DATE	5/8/14

SUBMITTED: MANNY TARIN

APPROVED FOR RELEASE: ED ARTIGLIA

Los Alamos NATIONAL LABORATORY PO Box 1663 Los Alamos, New Mexico 87545

SHEET C-1024

31 OF 434

CLASSIFICATION | REVIEWER | DATE

PROJECT ID 100761 | DRAWING NO C55864 | REV 0

File Location: P:_TECHNOLOGY\60239831 - RLWTF\500 CAD\502 CAD DIRECTORY\AECOM\LLW FACILITY\C\SHEET\55864-C-1024-R0.DWG
Plotted By: BROERMAN, DARLENE; Plot Date: Tuesday, May 06, 2014

12082

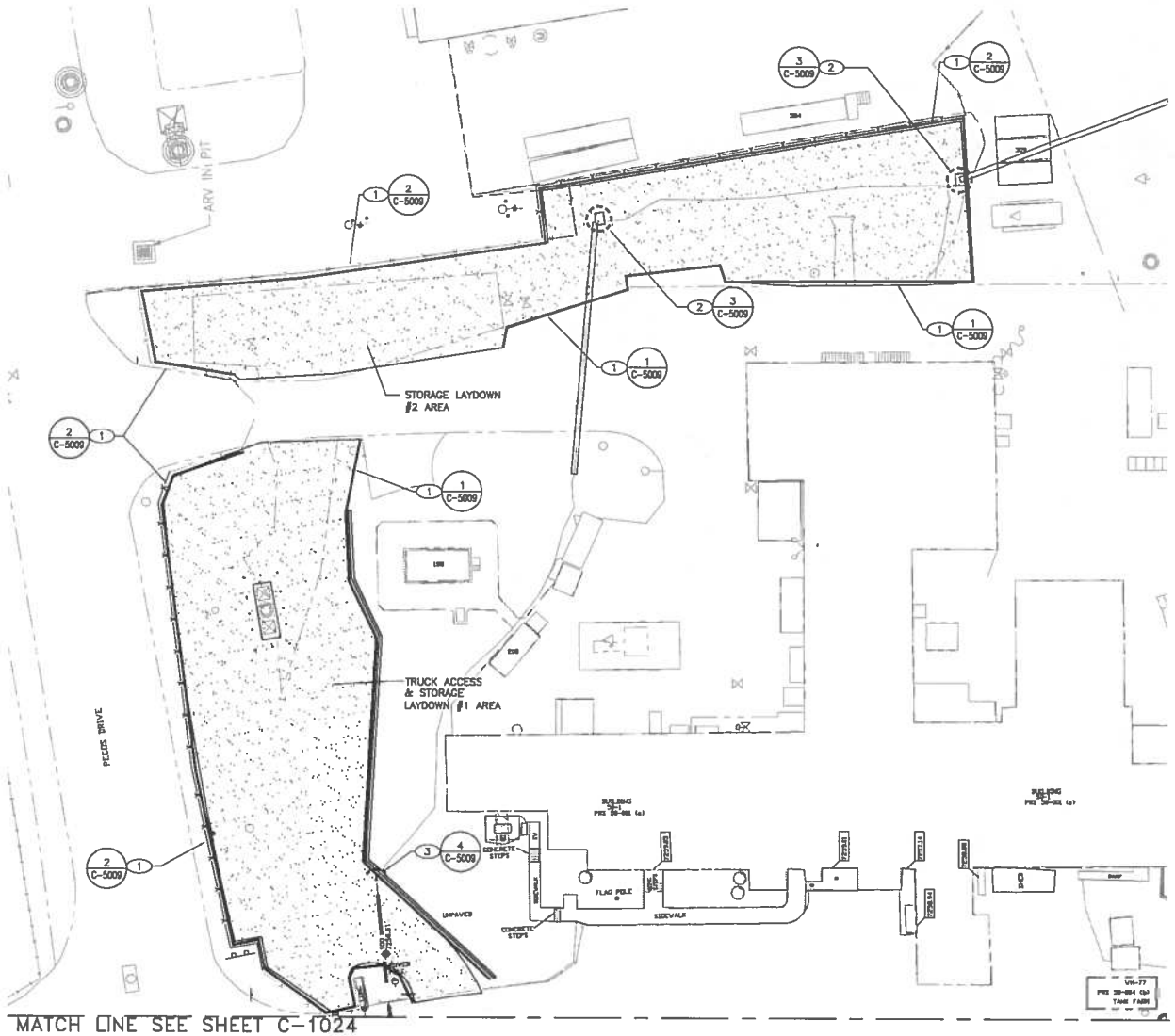

EROSION CONTROL LAYDOWN #1 AND #2 PLAN

20' 10' 0 10' 20'
1"=20'-0"

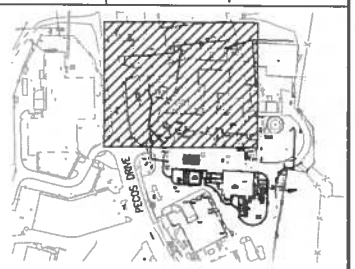

KEY PLAN
SCALE: NONE

GENERAL NOTES

1. IF THIS SHEET IS NOT 24"X 36" THEN IT IS A REDUCED PLOT. USE GRAPHIC SCALE ACCORDINGLY.
2. SEE SHEET C-5009 FOR EROSION CONTROL CONSTRUCTION NOTES.

KEYED NOTES

(1) LIMITS OF EROSION CONTROL FENCING.
(2) INLET SEDIMENT BARRIER.
(3) STRAW TUBE BARRIER.

NO	DATE	CLASS REV	ADC	DESCRIPTION	DWN	DES	CHKD	SUB	APP

AECOM

RLWTF-UP LOW LEVEL WASTE SUBPROJECT

EROSION CONTROL LAYDOWN #1 AND #2 PLAN

BLDG. 230 TA-50

DRAWN	C. MORGAN	
DESIGN	C. MORGAN	
CHECKED	M. TARIN	
DATE	5/9/14	

SUBMITTED: MANNY TARIN
APPROVED FOR RELEASE: ED ARTIGLIA

Los Alamos NATIONAL LABORATORY
PO Box 1663 Los Alamos, New Mexico 87545

SHEET C-1025
32 OF 434

CLASSIFICATION | REVIEWER | DATE

PROJECT ID: 100761
DRAWING NO: C55864
REV: 0

GENERAL NOTES

1. IF THIS SHEET IS NOT 24"X 36" THEN IT IS A REDUCED PLOT. USE GRAPHIC SCALE ACCORDINGLY.
2. SUBCONTRACTOR SHALL FIELD VERIFY EXISTING UTILITIES PRIOR TO BEGINNING CONSTRUCTION.

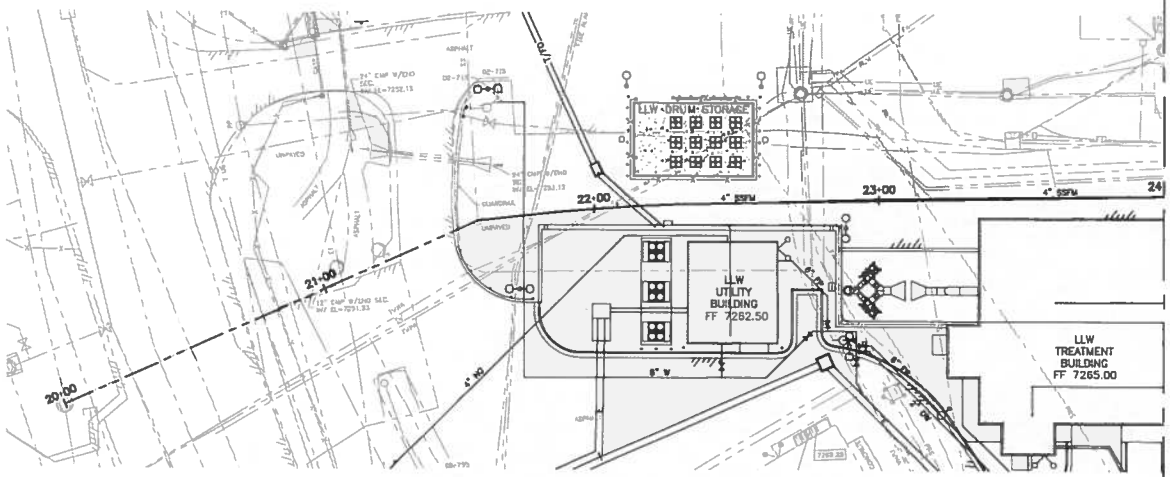

4" SANITARY SEWER FORCE MAIN PLAN

20' 10' 0 10' 20'
1"=20'-0"

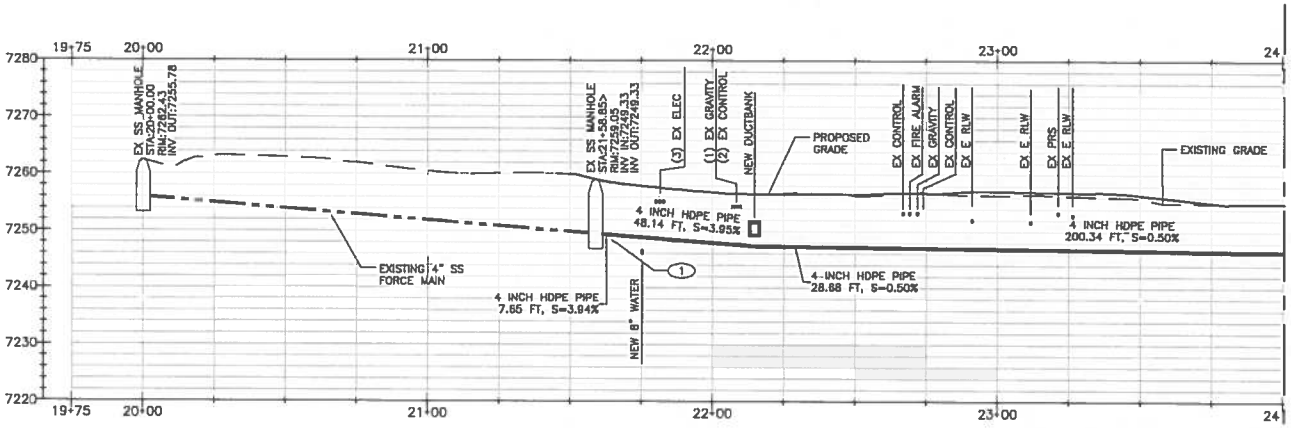

4" SANITARY SEWER FORCE MAIN PROFILE

20' 10' 0 10' 20'
1"=20'-0"
16' 5' 0 5' 10'
1"=10'-0" VERT.

KEYED NOTES

(1) SUBCONTRACTOR SHALL BRING NEW PIPES AND APPURTENANCES TO WITHIN AT LEAST 3 FEET OF TIE-IN POINT. LANL U&I GROUP WILL MAKE FINAL CONNECTIONS USING CONTRACTOR SUPPLIED MATERIAL AFTER IT HAS BEEN TESTED AND APPROVED.

NO	DATE	CLASS REV	ADC	DESCRIPTION	DRN	DES	CHKD	SUB	APP

AECOM

RLWTF-UP LOW LEVEL WASTE SUBPROJECT

SANITARY SEWER FORCE MAIN PLAN AND PROFILE

BLDG. 230 TA-50

DRAWN	C. MORGAN
DESIGN	C. MORGAN
CHECKED	M. TARIN
DATE	5/9/14

SUBMITTED MANNY TARIN

APPROVED FOR RELEASE ED ARTEGA

Los Alamos NATIONAL LABORATORY PO Box 1663 Los Alamos, New Mexico 87545

SHEET C-1026

33 OF 434

CLASSIFICATION | REVIEWER | DATE

PROJECT ID 100761

DRAWING NO C55864

REV 0

DRAFT

Plotted By: MORGAN, CHRIS; Plot Date: Wednesday, May 07, 2014 - RLWTF\230 CAD\230 CAD DIRECTORY\ADC\ADC\LLW FACILITY\C\CIVIL 30\RLWTF-PIPE-BASE.DWG

GENERAL NOTES

1. IF THIS SHEET IS NOT 24"X 36" THEN IT IS A REDUCED PLOT. USE GRAPHIC SCALE ACCORDINGLY.
2. SUBCONTRACTOR SHALL FIELD VERIFY EXISTING UTILITIES PRIOR TO BEGINNING CONSTRUCTION.

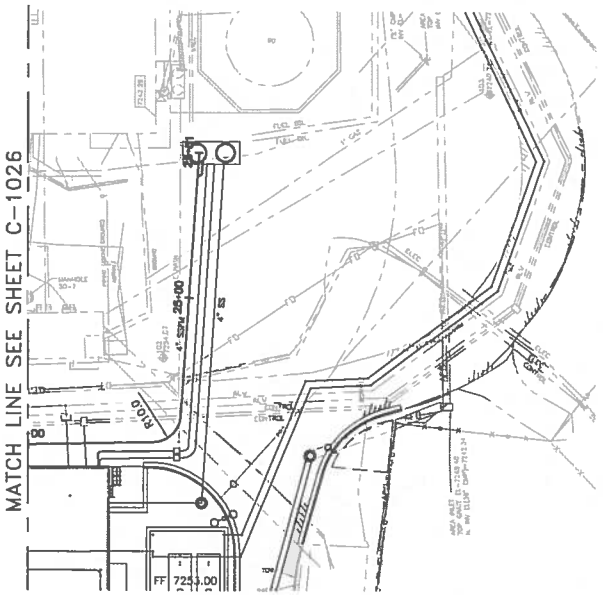

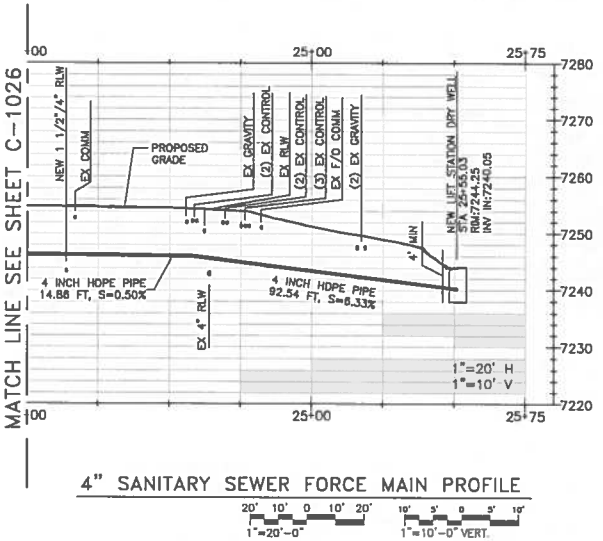

NO	DATE	CLASS REV	ADC	DESCRIPTION	DWN	DES	CHKD	SUB	APP

AECOM

RLWTF-UP LOW LEVEL WASTE SUBPROJECT

SANITARY SEWER FORCE MAIN PLAN AND PROFILE

BLDG. 230 TA-50

DRAWN	C. MORGAN
DESIGN	C. MORGAN
CHECKED	M. TARIN
DATE	5/8/14

SUBMITTED MANNY TARIN

APPROVED FOR RELEASE ED ARTIGLIA

Los Alamos NATIONAL LABORATORY PO Box 1663 Los Alamos, New Mexico 87545

SHEET C-1027

34 OF 434

CLASSIFICATION REVIEWER DATE

PROJECT ID 100761

DRAWING NO C55864

REV 0

MANUEL TARIN NEW MEXICO 12101 PROFESSIONAL ENGINEER 5/7/14

DRAFT

Plotted By: MORGAN, CHRIS. Plot Date: Wednesday, May 07, 2014 - 8:58am C:\Users\cmorgan\Documents\05239531 - RLWTF_000 CAD_002 CAD DIRECTORY\MODEL\LW FACILITY\C_CIVIL 3D\RLWTF-PPE-BASE.DWG

GENERAL NOTES

1. IF THIS SHEET IS NOT 24"X 36" THEN IT IS A REDUCED PLOT. USE GRAPHIC SCALE ACCORDINGLY.
2. SUBCONTRACTOR SHALL FIELD VERIFY EXISTING UTILITIES PRIOR TO BEGINNING CONSTRUCTION.

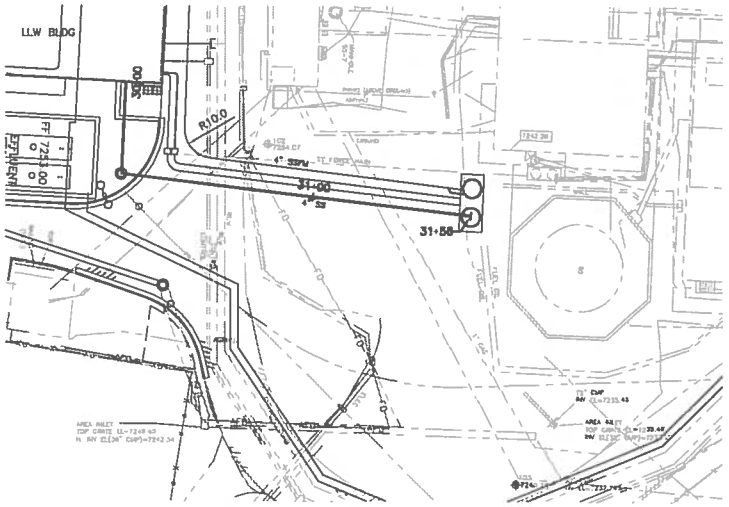

4" SANITARY SEWER SERVICE PLAN

20' 10' 0 10' 20'
1"=20'-0"

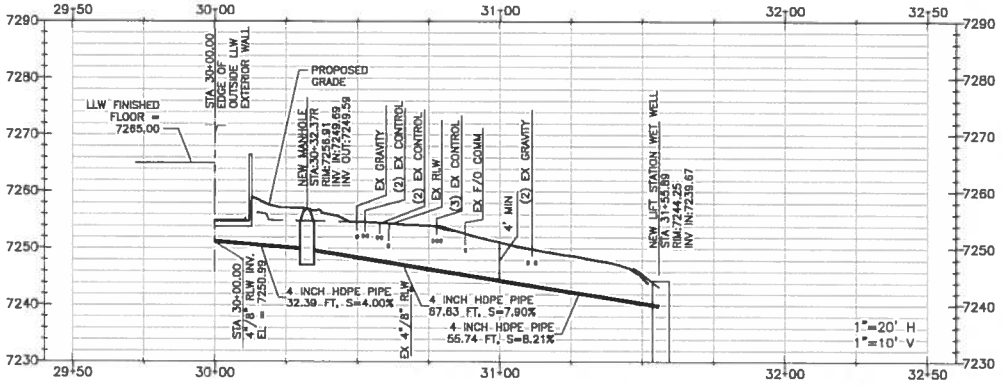

4" SANITARY SEWER SERVICE PROFILE

20' 10' 0 10' 20'
1"=20'-0"

10' 5' 0 5' 10'
1"=10'-0" VERT.

NO	DATE	CLASS REV	ADC	DESCRIPTION	DWN	DES	CHKD	SUB	APP

AECOM

RLWTF-UP LOW LEVEL WASTE SUBPROJECT

4" SANITARY SEWER SERVICE PLAN AND PROFILE

BLDG. 230 TA-50

DRAWN	C. MORGAN
DESIGN	C. MORGAN
CHECKED	M. TARIN
DATE	5/8/14

SUBMITTED: MANNY TARIN — APPROVED FOR RELEASE: ED ARTIOLA

Los Alamos NATIONAL LABORATORY — PO Box 1663 Los Alamos, New Mexico 87545

SHEET C-1028

35 OF 434

CLASSIFICATION | REVIEWER | DATE

PROJECT ID 100761 | DRAWING NO C55864 | REV 0

98021

File Location: P:_TECHNOLOGY\98238931 - RLWTF\300 CAD\302 CAD DIRECTORY\ACCOM\LLW FACILITY\CIVIL 3D\RLWTF-PIPE-BASE.DWG
Plotted By: MORGAN, CHRIS; Plot Date: Wednesday, May 07, 2014

GENERAL NOTES

1. IF THIS SHEET IS NOT 24"X 36" THEN IT IS A REDUCED PLOT. USE GRAPHIC SCALE ACCORDINGLY.
2. SUBCONTRACTOR SHALL FIELD VERIFY EXISTING UTILITIES PRIOR TO BEGINNING CONSTRUCTION.

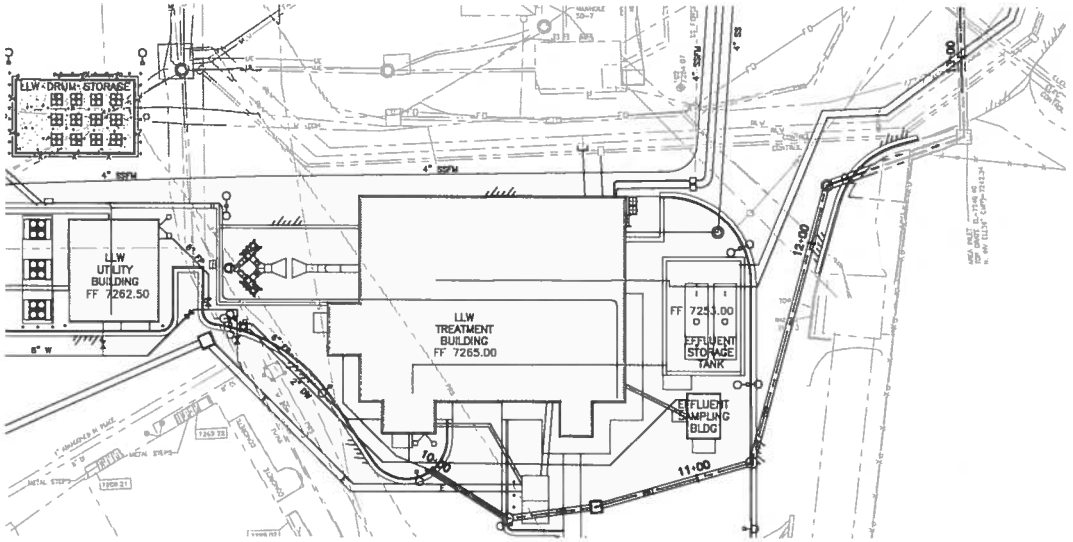

24" STORM DRAIN PLAN

20' 10' 0 10' 20'
1"=20'-0"

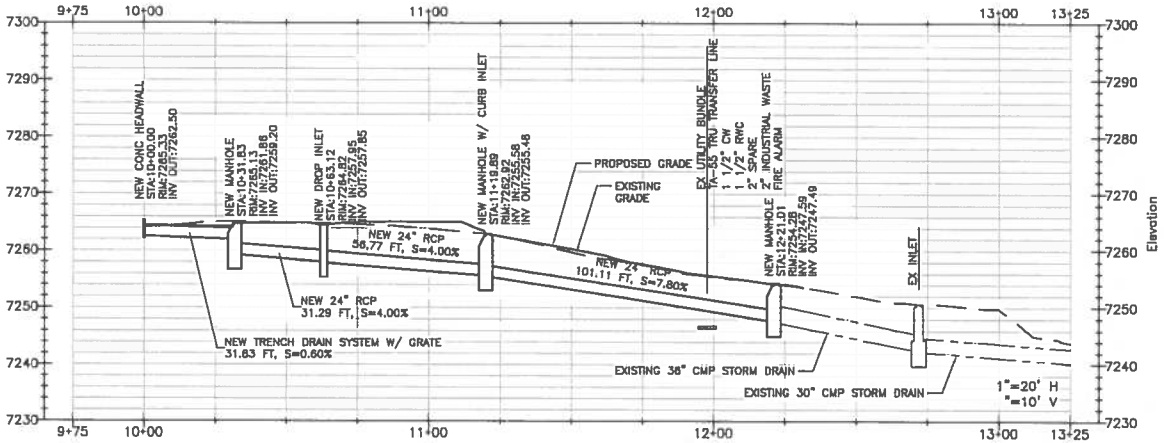

24" STORM DRAIN PROFILE

20' 10' 0 10' 20'
1"=20'-0"

10' 5' 0 5' 10'
1"=10'-0" VERT.

NO	DATE	CLASS REV	ADC	DESCRIPTION	DWN	DES	CHKD	SUB	APP

AECOM

RLWTF-UP LOW LEVEL WASTE SUBPROJECT

24" STORM DRAIN PLAN AND PROFILE

DRAWN	C. MORGAN
DESIGN	C. MORGAN
CHECKED	M. TARIN
DATE	5/8/14

BLDG. 230 TA-50

SUBMITTED MANNY TARIN

APPROVED FOR RELEASE ED ANTOLIN

Los Alamos NATIONAL LABORATORY PO Box 1663 Los Alamos, New Mexico 87545

SHEET C-1029

36 OF 434

CLASSIFICATION REVIEWER DATE

PROJECT ID 100761

DRAWING NO C55864

REV 0

Plotted By: MORGAN, CHRIS
Plot Date: Wednesday, May 07, 2014
N:\Engineering\Solution\02238531 - RLWTF\CAD\ CAD\A02 CAD DIRECTORY\ADDA\LLW FACILITY\LLWTF-PIPE-BASE.DWG

GENERAL NOTES

1. IF THIS SHEET IS NOT 24"X 36" THEN IT IS A REDUCED PLOT. USE GRAPHIC SCALE ACCORDINGLY.
2. SUBCONTRACTOR SHALL FIELD VERIFY EXISTING UTILITIES PRIOR TO BEGINNING CONSTRUCTION.

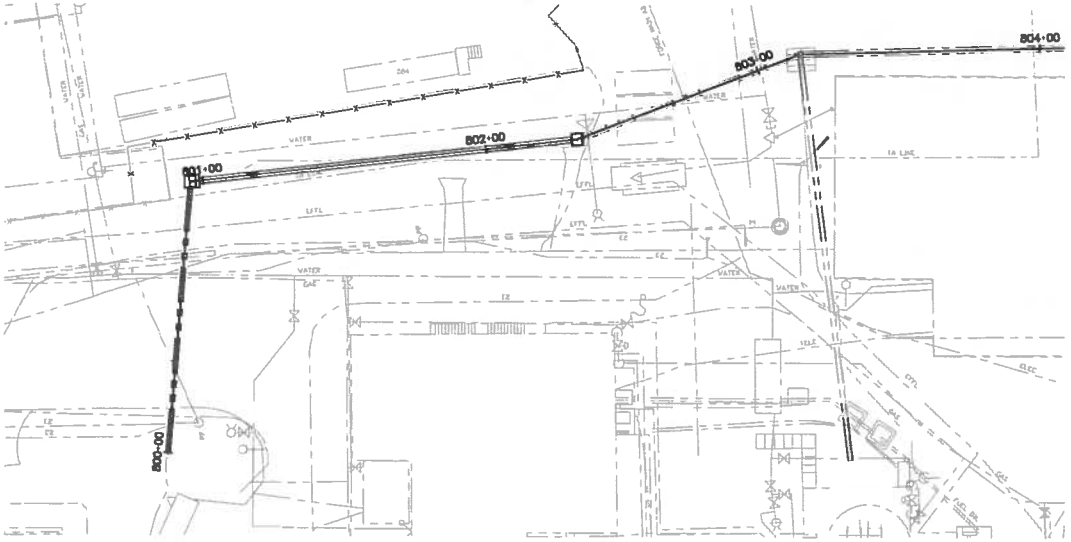

24" STORM DRAIN PLAN

20' 10' 0 10' 20'
1"=20'-0"

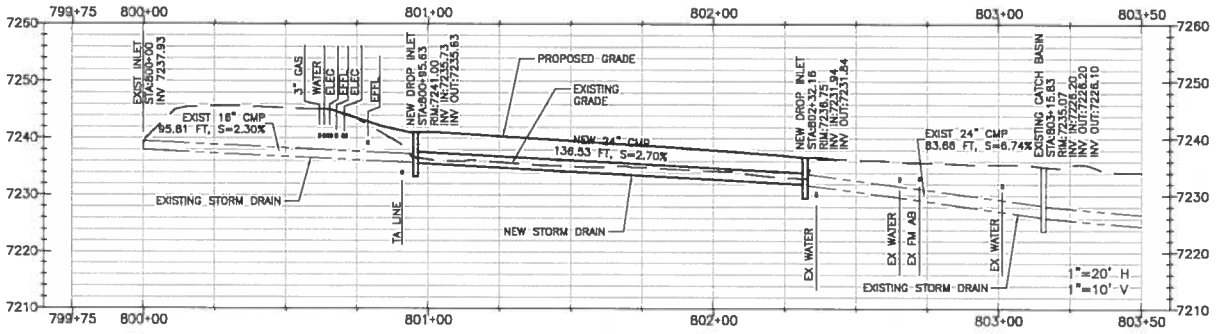

24" STORM DRAIN PROFILE

20' 10' 0 10' 20'
1"=20'-0"

10' 5' 0 5' 10'
1"=10'-0" VERT.

NO	DATE	CLASS REV	ADC	DESCRIPTION	DWN	DES	CHKD	SUB	APP

AECOM

RLWTF-UP LOW LEVEL WASTE SUBPROJECT

EAST STORAGE 24" STORM DRAIN PLAN AND PROFILE

BLDG. 230 TA-50

DRAWN	C. MORGAN
DESIGN	C. MORGAN
CHECKED	M. TARIN
DATE	5/8/14

SUBMITTED MANNY TARIN

APPROVED FOR RELEASE ED ANTOLIN

Los Alamos NATIONAL LABORATORY PO Box 1663 Los Alamos, New Mexico 87545

SHEET C-1030

37 OF 434

CLASSIFICATION REVIEWER DATE

PROJECT ID	DRAWING NO	REV
100761	C55864	0

88021
Plot Date: Wednesday, May 07, 2014
Plotted By: MORGAN, CHRIS
File Location: C:\DWGS\RLWTF\PROJECT\C55864 - RLWTF\UG CAD\UG CAD DIRECTORY\EDGAR\LLW FACILITY\CIVIL 30\ALIGN-PIPE-BASE.DWG

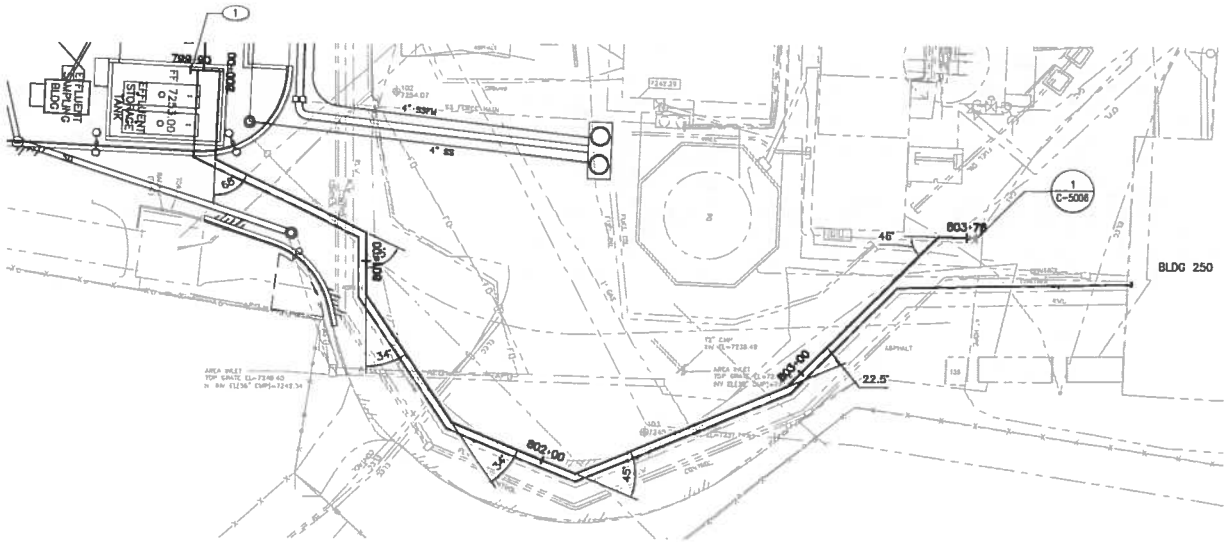

LLW-301-HDPE-3" EFFLUENT PLAN

20' 10' 0 10' 20'
1"=20'-0"

GENERAL NOTES

1. IF THIS SHEET IS NOT 24"X 36" THEN IT IS A REDUCED PLOT. USE GRAPHIC SCALE ACCORDINGLY.
2. SUBCONTRACTOR SHALL FIELD VERIFY EXISTING UTILITIES PRIOR TO BEGINNING CONSTRUCTION.

KEYED NOTES

(1) COORDINATE LOCATION WITH STRUCTURAL.

(2) EXTEND 150# FLANGE ON PRIMARY 12 TO 13 INCHES ABOVE FINISHED FLOOR WITH END OF LINE TERMINATION DOGBONE. PROVIDE BLIND FLANGE WITH APPROVED GASKET AND FASTENERS.

(3) COORDINATE WITH LANL ON REQUIRED END FITTING TO MATCH EXISTING VALVE CONNECTION.

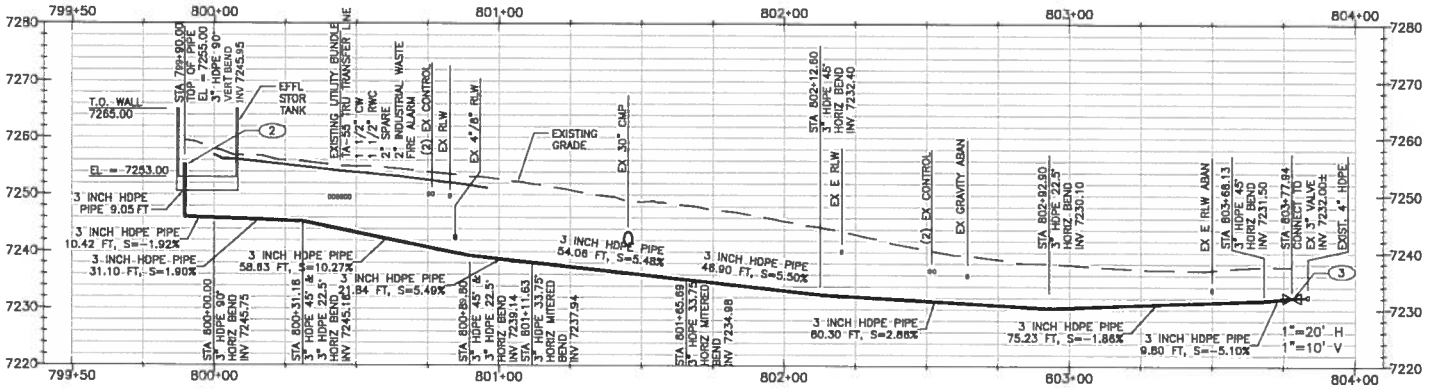

LLW-301-HDPE-3" EFFLUENT PROFILE

20' 10' 0 10' 20'
1"=20'-0"

10' 5' 0 5' 10'
1"=10'-0" VERT

NO	DATE	CLASS REV	ABC	DESCRIPTION	DRN	DES	CHKD	SUB	APP

AECOM

RLWTF-UP LOW LEVEL WASTE SUBPROJECT

LLW-301-HDPE-3" PLAN AND PROFILE

DRAWN	C. MORGAN
DESIGN	C. MORGAN
CHECKED	M. TARIN
DATE	5/9/14

BLDG. 230 TA-50

SUBMITTED MANNY TARIN

APPROVED FOR RELEASE ED ARTIOLA

Los Alamos NATIONAL LABORATORY PO Box 1663 Los Alamos, New Mexico 87545

SHEET C-1031

38 OF 434

CLASSIFICATION REVIEWER DATE

PROJECT ID 100761

DRAWING NO C55864

REV 0

68021
Plotted By: MORGAN, CHRIS; Plot Date: Wednesday, May 07, 2014
Path: Z:\Projects\602389531 - RLWTF\CAD\502 CAD DIRECTORY\ACAD\LLW FACILITY\C1031_30\LWTF-PIPE-BASE.DWG

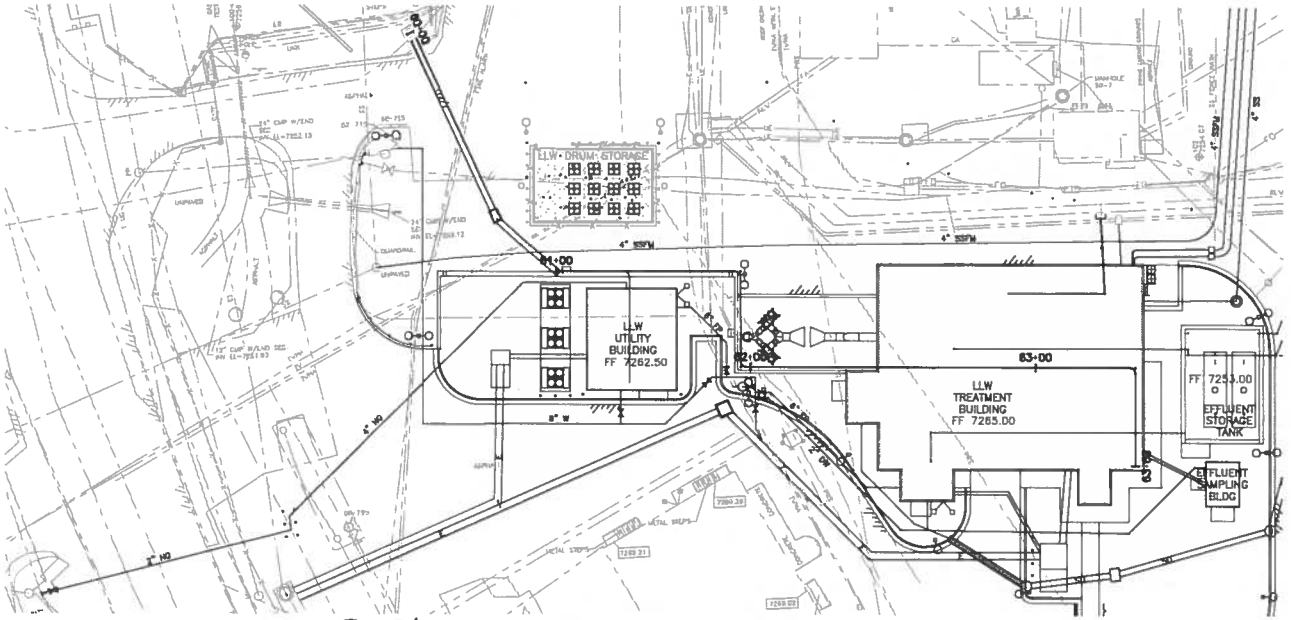

F/O COMMUNICATION DUCTBANK PLAN

1"=20'-0"

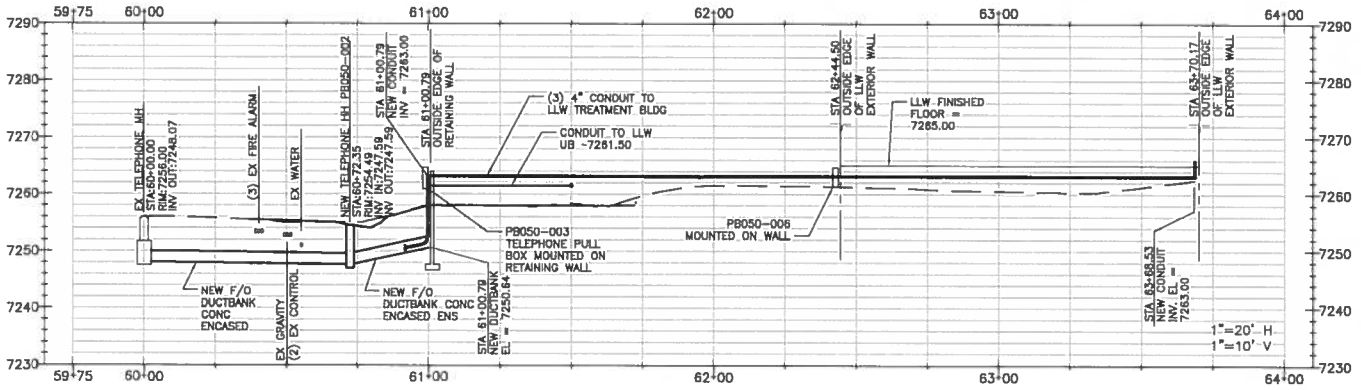

F/O COMMUNICATION DUCTBANK PROFILE

1"=20'-0" 1"=10'-0" VERT.

GENERAL NOTES

1. IF THIS SHEET IS NOT 24"X 36" THEN IT IS A REDUCED PLOT. USE GRAPHIC SCALE ACCORDINGLY.
2. SUBCONTRACTOR SHALL FIELD VERIFY EXISTING UTILITIES PRIOR TO BEGINNING CONSTRUCTION.
3. CONDUITS SHALL DRAIN TO MANHOLE AT A MINIMUM RATE OF 4"/100' TO A SUITABLE SUMP EVEN IN A MANHOLE [LANL ESM ISD341-2 CHAPTER 7, SECTION 64010].
4. REFER TO ELECTRICAL SHEETS FOR INFORMATION.
5. REFER TO TRENCH DETAILS ON SHEET C-5008.

NO	DATE	CLASS REV	ADC	DESCRIPTION	DWN	DES	CHKD	SUB	APP

AECOM

RLWTF-UP LOW LEVEL WASTE SUBPROJECT

COMMUNICATION DUCTBANK PLAN AND PROFILE

DRAWN	C. MORGAN
DESIGN	C. MORGAN
CHECKED	M. TARIN
DATE	5/9/14

BLDG. 230 TA-50

SUBMITTED MANNY TARIN

APPROVED FOR RELEASE ED ARTIGLIA

Los Alamos NATIONAL LABORATORY PO Box 1663 Los Alamos, New Mexico 87545

SHEET C-1032

39 OF 434

CLASSIFICATION REVIEWER DATE

PROJECT ID 100761

DRAWING NO C55864

REV 0

Plotted By: MORGAN, CHRIS
Plot Date: Wednesday, May 07, 2014
D:\RLWTF\ENV\DGN\C55864.dgn

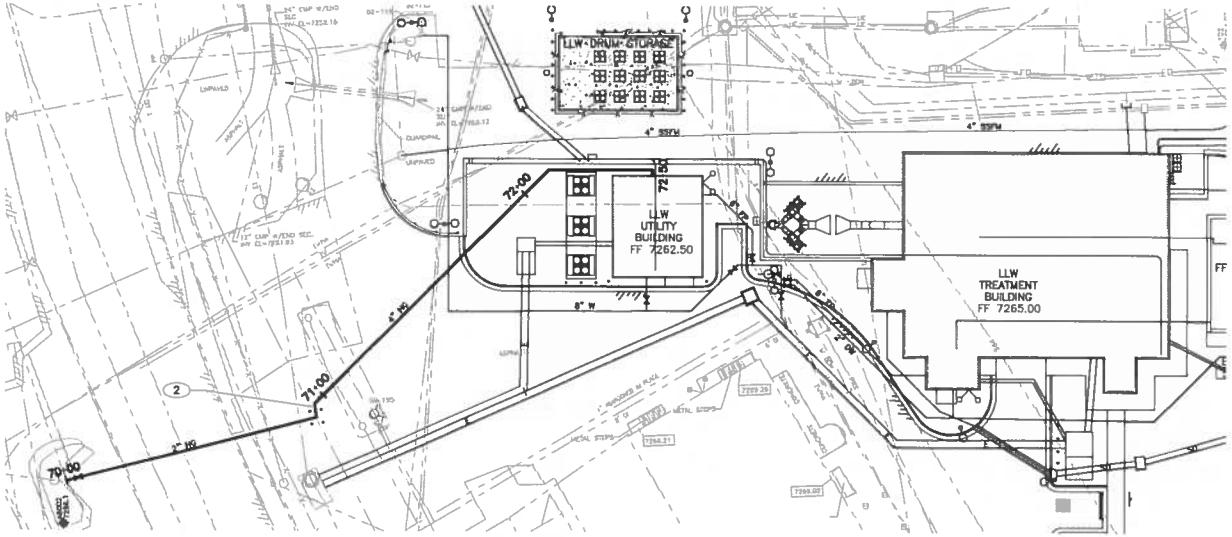

GAS LINE PLAN

20' 10' 0 10' 20'
1"=20'-0"

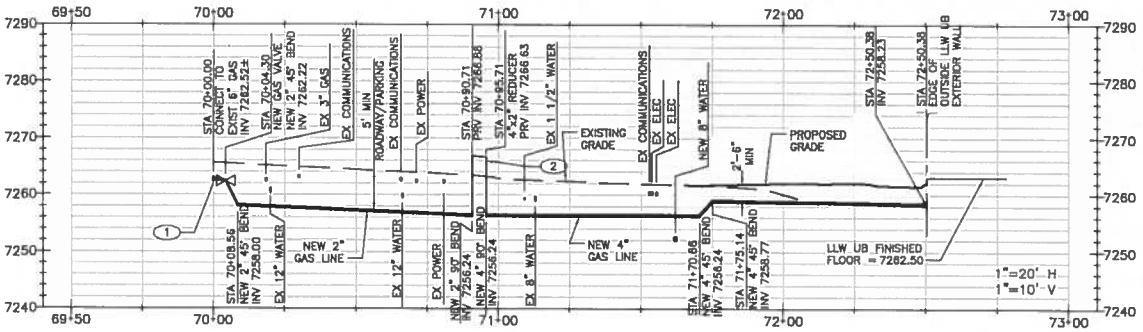

GAS LINE PROFILE

20' 10' 0 10' 20'
1"=20'-0"

10' 5' 0 5' 10'
1"=10'-0" VERT.

GENERAL NOTES

1. IF THIS SHEET IS NOT 24"X 36" THEN IT IS A REDUCED PLOT. USE GRAPHIC SCALE ACCORDINGLY.
2. SUBCONTRACTOR SHALL FIELD VERIFY EXISTING UTILITIES PRIOR TO BEGINNING CONSTRUCTION.

KEYED NOTES

1. SUBCONTRACTOR SHALL BRING NEW PIPES AND APPURTENANCES TO WITHIN AT LEAST 3 FEET OF TIE-IN POINT. LANL U&I GROUP WILL MAKE FINAL CONNECTIONS USING SUBCONTRACTOR SUPPLIED MATERIAL AFTER IT HAS BEEN TESTED AND APPROVED.
2. NATURAL GAS REGULATOR STATION, SEE SHEET C-5010.

NO	DATE	CLASS REV	ADC	DESCRIPTION	DWN	DES	CHKD	SUB	APP

AECOM

RLWTF-UP LOW LEVEL WASTE SUBPROJECT

GAS LINE PLAN AND PROFILE

BLDG. 230 TA-50

DRAWN	C. MORGAN
DESIGN	C. MORGAN
CHECKED	M. TARIN
DATE	5/8/14

SUBMITTED: MANNY TARIN

APPROVED FOR RELEASE: ED ARTIGLIA

Los Alamos NATIONAL LABORATORY PO Box 1663 Los Alamos, New Mexico 87545

SHEET C-1033

40 OF 434

CLASSIFICATION | REVIEWER | DATE

PROJECT ID 100761 | DRAWING NO C55864 | REV 0

File Location: P:_TECHNOLOGY\B0239831 - RLWTF\500 CAD\502 CAD DIRECTORY\AECOM\LLW FACILITY\C\CIVIL 3D\RLWTF-PIPE-BASE.DWG
Plotted By: MORGAN, CHRIS; Plot Date: Wednesday, May 07, 2014

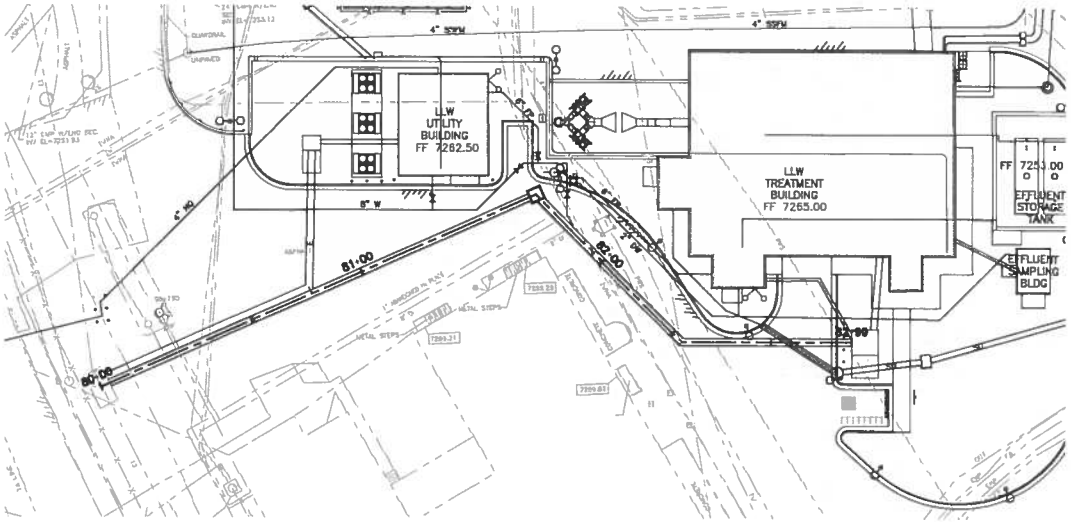

MEDIUM VOLTAGE DUCTBANK PLAN

20' 10' 0 10' 20'

1"=20'-0"

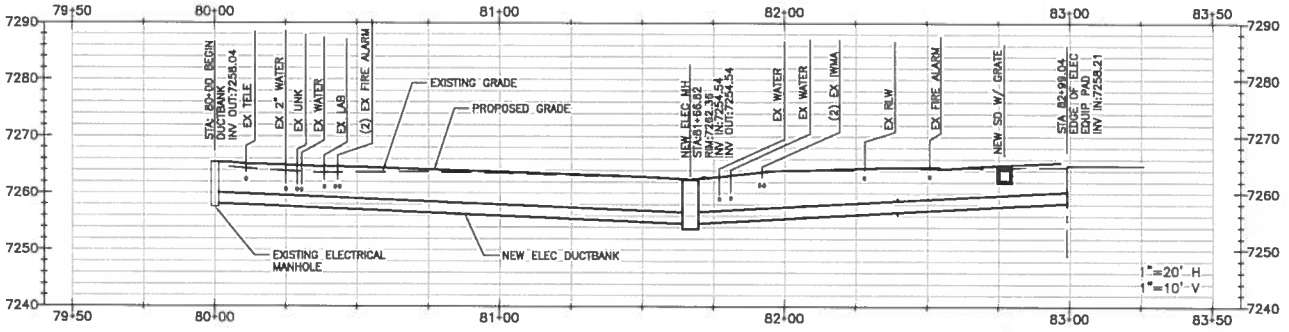

MEDIUM VOLTAGE DUCTBANK PROFILE

20' 10' 0 10' 20'

1"=20'-0"

10' 5' 0 5' 10'

1"=10'-0" VERT.

GENERAL NOTES

1. IF THIS SHEET IS NOT 24"X 36" THEN IT IS A REDUCED PLOT. USE GRAPHIC SCALE ACCORDINGLY.
2. SUBCONTRACTOR SHALL FIELD VERIFY EXISTING UTILITIES PRIOR TO BEGINNING CONSTRUCTION.
3. CONDUITS SHALL DRAIN TO MANHOLE AT A MINIMUM RATE OF 4"/100' TO A SUITABLE SUMP EVEN IN A MANHOLE [LANL ESM ISD341-2 CHAPTER 7, SECTION 84010].

NO	DATE	CLASS REV	ADC	DESCRIPTION	DWN	DES	CHKD	SUB	APP

AECOM

RLWTF-UP LOW LEVEL WASTE SUBPROJECT

MEDIUM VOLTAGE DUCTBANK PLAN AND PROFILE

BLDG. 230 TA-50

DRAWN	C. MORGAN
DESIGN	C. MORGAN
CHECKED	M. TARIN
DATE	5/8/14

SUBMITTED MANNY TARIN

APPROVED FOR RELEASE ED ARTIOLA

Los Alamos NATIONAL LABORATORY PO Box 1663 Los Alamos, New Mexico 87545

SHEET C-1034

41 OF 434

CLASSIFICATION REVIEWER DATE

PROJECT ID 100761

DRAWING NO C55864

REV 0

26021
Plotted By: MORGAN, CHRIS Plot Date: Wednesday, May 07, 2014
Path: L:\Design\Division\26021\...\RLWTF\UP\CAD\SUBS\CAD DIRECTORY\ADDENDUM FACILITY\CIVIL XR\RLWTF-PIPE-BASELINE

GENERAL NOTES

1. IF THIS SHEET IS NOT 24"X 36" THEN IT IS A REDUCED PLOT. USE GRAPHIC SCALE ACCORDINGLY.
2. SUBCONTRACTOR SHALL FIELD VERIFY EXISTING UTILITIES PRIOR TO BEGINNING CONSTRUCTION.

KEYED NOTES

1. NEW 4" DOMESTIC WATER LINE TO LLW UTILITY BUILDING.
2. NEW 8" WATER LINE.

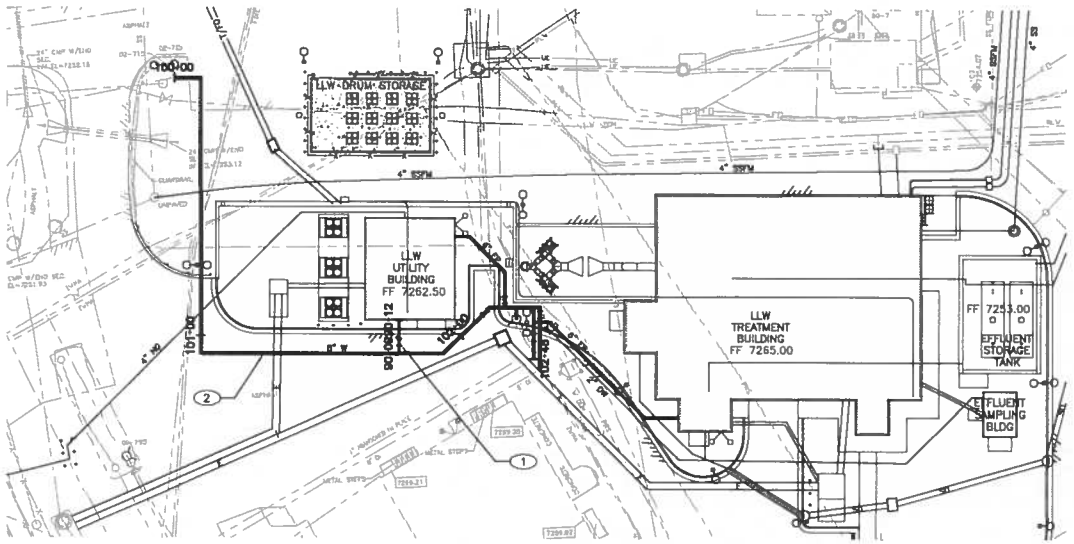

DOMESTIC WATER LINE TO LLW UB AND 8" WATER LINE PLAN

20' 10' 0 10' 20'
1"=20'-0"

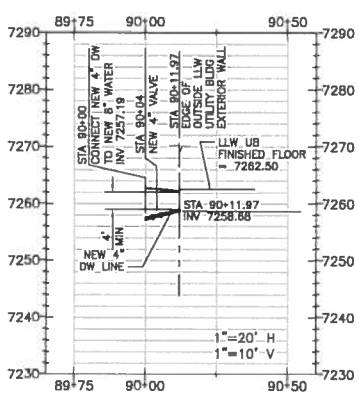

① DOMESTIC LINE TO LLW UB PROFILE

20' 10' 0 10' 20'
1"=20'-0"
10' 5' 0 5' 10'
1"=10'-0" VERT.

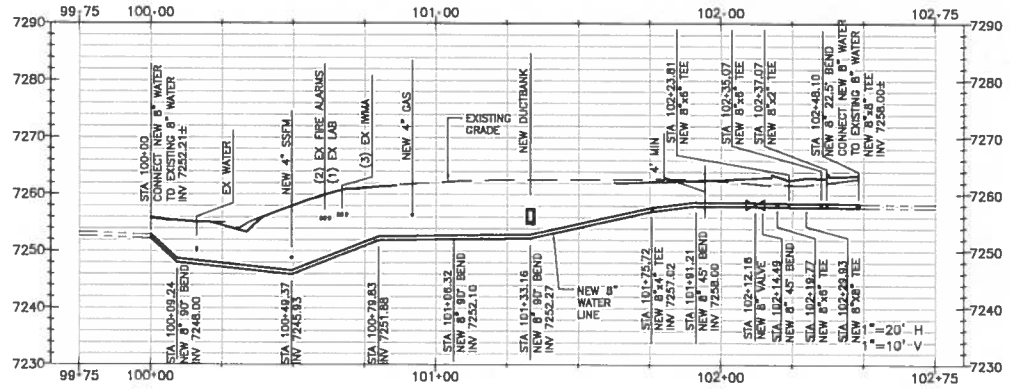

② 8" WATER LINE PROFILE

20' 10' 0 10' 20'
1"=20'-0"
10' 5' 0 5' 10'
1"=10'-0" VERT

NO	DATE	CLASS REV	ADC	DESCRIPTION	DWN	DES	CHKD	SUB	APP

AECOM

RLWTF-UP LOW LEVEL WASTE SUBPROJECT

WATER LINE PLANS AND PROFILES

BLDG. 230 TA-50

DRAWN	C. MORGAN
DESIGN	C. MORGAN
CHECKED	M. TARIN
DATE	5/8/14

SUBMITTED: MANNY TARIN

APPROVED FOR RELEASE: ED ARTIGLIA

Los Alamos NATIONAL LABORATORY PO Box 1663 Los Alamos, New Mexico 87545

SHEET C-1035

42 OF 434

CLASSIFICATION | REVIEWER | DATE

PROJECT ID 100761 | DRAWING NO C55864 | REV 0

MANUEL TARIN, III NEW MEXICO 18741 PROFESSIONAL ENGINEER

5/1/014

File Location: P:_TECHNOLOGY\60238631 - RLWTF\300 CAD\302 CAD DIRECTORY\AECOM\LLW FACILITY\C\CIVIL 3D\RLWTF-PIPE-BASE.DWG
Plotted By: MORGAN, CHRIS; Plot Date: Thursday, May 22, 2014

1203

GENERAL NOTES

1. IF THIS SHEET IS NOT 24"X 36" THEN IT IS A REDUCED PLOT. USE GRAPHIC SCALE ACCORDINGLY.
2. SUBCONTRACTOR SHALL FIELD VERIFY EXISTING UTILITIES PRIOR TO BEGINNING CONSTRUCTION.

KEYED NOTES

1. NEW FIRE PROTECTION WATER LINE TO LLW UTILITY BUILDING.
2. NEW FIRE PROTECTION WATER LINE TO LLW BUILDING.
3. NEW FIRE PROTECTION WATER LINE BRANCH TO FIRE HYDRANT.

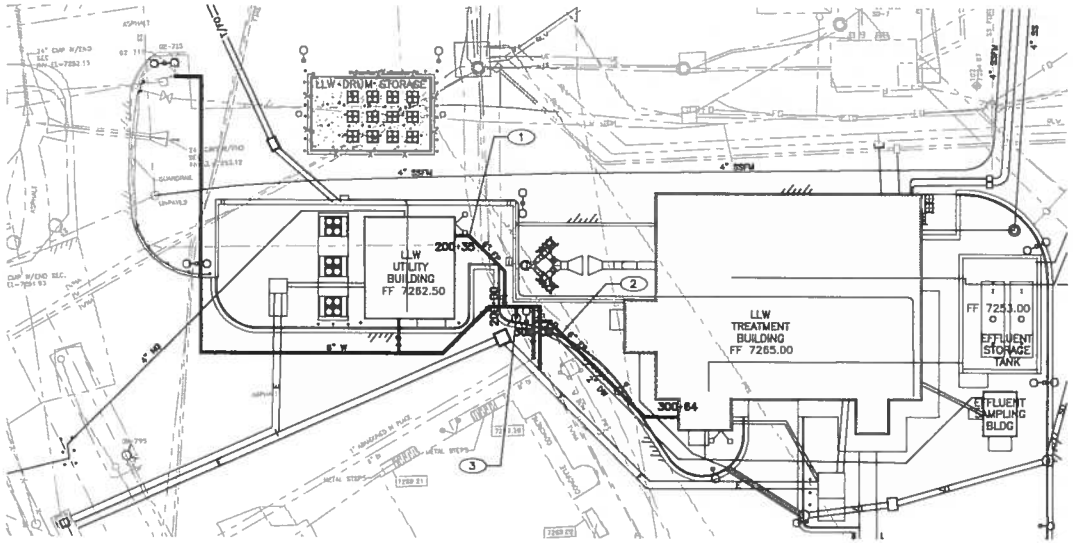

FIRE PROTECTION LINES PLAN

20' 10' 0 10' 20'
1"=20'-0"

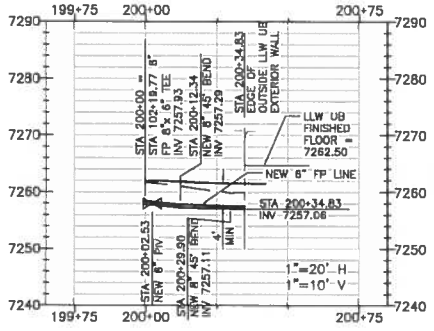

① FIRE PROTECTION TO LLW UB PROFILE

20' 10' 0 10' 20'
1"=20'-0"
10' 5' 0 5' 10'
1"=10'-0" VERT

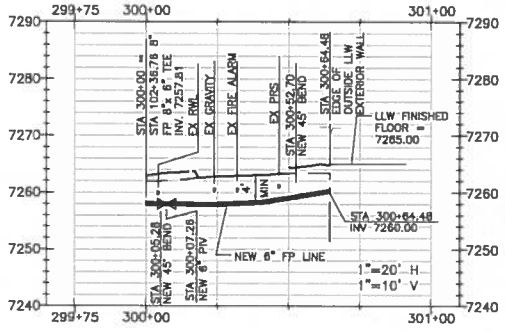

② FIRE PROTECTION TO LLW BLDG PROFILE

20' 10' 0 10' 20'
1"=20'-0"
10' 5' 0 5' 10'
1"=10'-0" VERT.

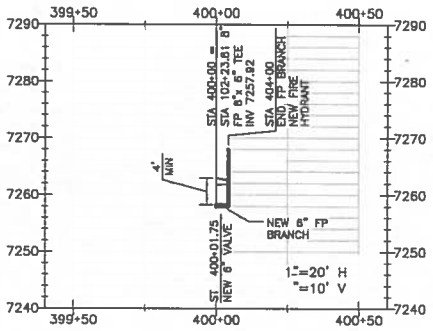

③ FIRE PROTECTION BRANCH PROFILE

20' 10' 0 10' 20'
1"=20'-0"
10' 5' 0 5' 10'
1"=10'-0" VERT

NO	DATE	CLASS REV	ADC	DESCRIPTION	DWN	DES	CHKD	SUB	APP

AECOM

RLWTF-UP LOW LEVEL WASTE SUBPROJECT

WATER LINE PLANS AND PROFILES

BLDG. 230 TA-50

DRAWN	C. MORGAN
DESIGN	C. MORGAN
CHECKED	M. TARIN
DATE	5/8/14

SUBMITTED: MANNY TARIN

APPROVED FOR RELEASE: ED ARTIGLIA

Los Alamos NATIONAL LABORATORY, PO Box 1663, Los Alamos, New Mexico 87545

SHEET C-1036

43 OF 434

CLASSIFICATION | REVIEWER | DATE

PROJECT ID 100761 | DRAWING NO C55864 | REV 0

MANUEL TARIN, III, NEW MEXICO, 18741, PROFESSIONAL ENGINEER

5/7/14

File Location: P:_TECHNOLOGY\60230831 - RLWTF\500 CAD\502 CAD DIRECTORY\AECOM\LLW FACILITY\C\CIVIL 3D\RLWTF-PIPE-BASE.DWG
Plotted By: MORGAN, CHRIS; Plot Date: Thursday, May 22, 2014

120

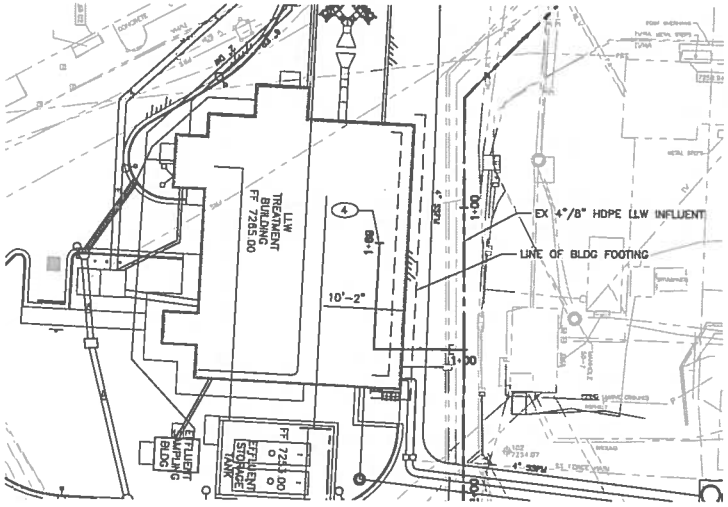

LLW-101-HDPE-1 1/2" INFLUENT PLAN

20' 10' 0 10' 20'
1"=20'-0"

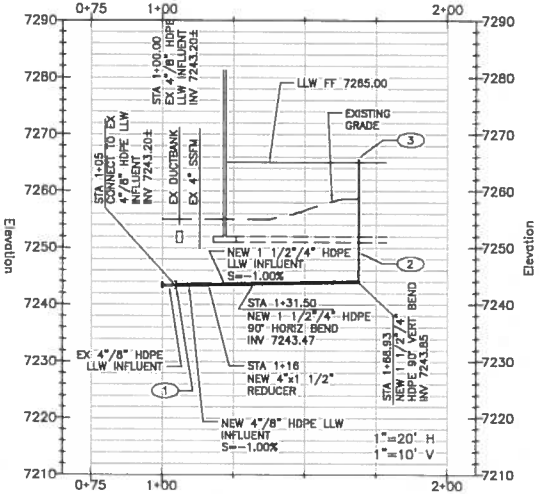

LLW-101-HDPE-1 1/2" INFLUENT PROFILE

20' 10' 0 10' 20'
1"=20'-0"

10' 5' 0 5' 10'
1"=10'-0" VERT.

GENERAL NOTES

1. IF THIS SHEET IS NOT 24"X 36" THEN IT IS A REDUCED PLOT. USE GRAPHIC SCALE ACCORDINGLY.
2. SUBCONTRACTOR SHALL FIELD VERIFY EXISTING UTILITIES PRIOR TO BEGINNING CONSTRUCTION.

KEYED NOTES

1. LANL TO MAKE CONNECTION TO EXISTING LINE.
2. PROTECT VERTICAL SECTION DURING BACKFILL. METHOD TO MAINTAIN ALIGNMENT.
3. EXTEND 150# FLANGE ON PRIMARY 12 TO 13 INCHES ABOVE FINISHED FLOOR WITH END OF LINE TERMINATION DOGBONE. PROVIDE BLIND FLANGE WITH APPROVED GASKET AND FASTENERS.
4. COORDINATE LOCATION WITH STRUCTURAL.

NO	DATE	CLASS REV	ADC	DESCRIPTION	DWN	DES	CHKD	SUB	APP

AECOM

RLWTF-UP LOW LEVEL WASTE SUBPROJECT

LLW-101-HDPE-1.5" INFLUENT PLAN AND PROFILE

BLDG. 230 TA-50

DRAWN	C. MORGAN
DESIGN	C. MORGAN
CHECKED	M. TARIN
DATE	5/8/14

SUBMITTED: MANNY TARIN

APPROVED FOR RELEASE: ED ARTIGLIA

Los Alamos NATIONAL LABORATORY PO Box 1663 Los Alamos, New Mexico 87545

SHEET C-1037

44 OF 434

CLASSIFICATION | REVIEWER | DATE

PROJECT ID 100761 | DRAWING NO C55864 | REV 0

File Location: P:_TECHNOLOGY\002.30.031 - RLWTF\500 CAD\502 CAD DIRECTORY\AECOM\LLW FACILITY\C\CIVIL 3D\RLWTF-PIPE-BASE.DWG
Plotted By: MORGAN, CHRIS; Plot Date: Wednesday, May 07, 2014

12095

GENERAL NOTES

1. IF THIS SHEET IS NOT 24"X 36" THEN IT IS A REDUCED PLOT. USE GRAPHIC SCALE ACCORDINGLY.
2. SUBCONTRACTOR SHALL FIELD VERIFY EXISTING UTILITIES PRIOR TO BEGINNING CONSTRUCTION.

KEYED NOTES

(1) EXTEND 150# FLANGE ON PRIMARY 12 TO 13 INCHES BEYOND WALL WITH DOGBONE WITH MANUAL LEAK DETECTION VALVE. PROVIDE BLIND FLANGE WITH APPROVED GASKET AND FASTENERS.

(2) TRANSITION TO 8" METAL PIPE IN EFFLUENT TANK BASIN (UTILITY SUBCONTRACTOR SHALL COORDINATE WITH PLUMBING SUBCONTRACTOR).

(3) EXTEND 150# FLANGE ON PRIMARY 12 TO 13 INCHES ABOVE FINISHED FLOOR WITH END OF LINE TERMINATION DOGBONE. PROVIDE BLIND FLANGE WITH APPROVED GASKET AND FASTENERS.

(4) COORDINATE WITH STRUCTURAL FOR PENETRATION LOCATIONS AND SLEEVE ALIGNMENT, SEE SHEET S-7400.

(5) EXTEND 150# FLANGE ON PRIMARY 12 TO 13 INCHES BEYOND WALL WITH END OF LINE TERMINATION DOGBONE. PROVIDE BLIND FLANGE WITH APPROVED GASKET AND FASTENERS.

(6) COORDINATE WITH STRUCTURAL FOR FLOOR PENETRATIONS, SEE SHEET S-7400.

(7) EXPOSED PIPE IN TANK BASIN IS SINGLE WALL PIPE.

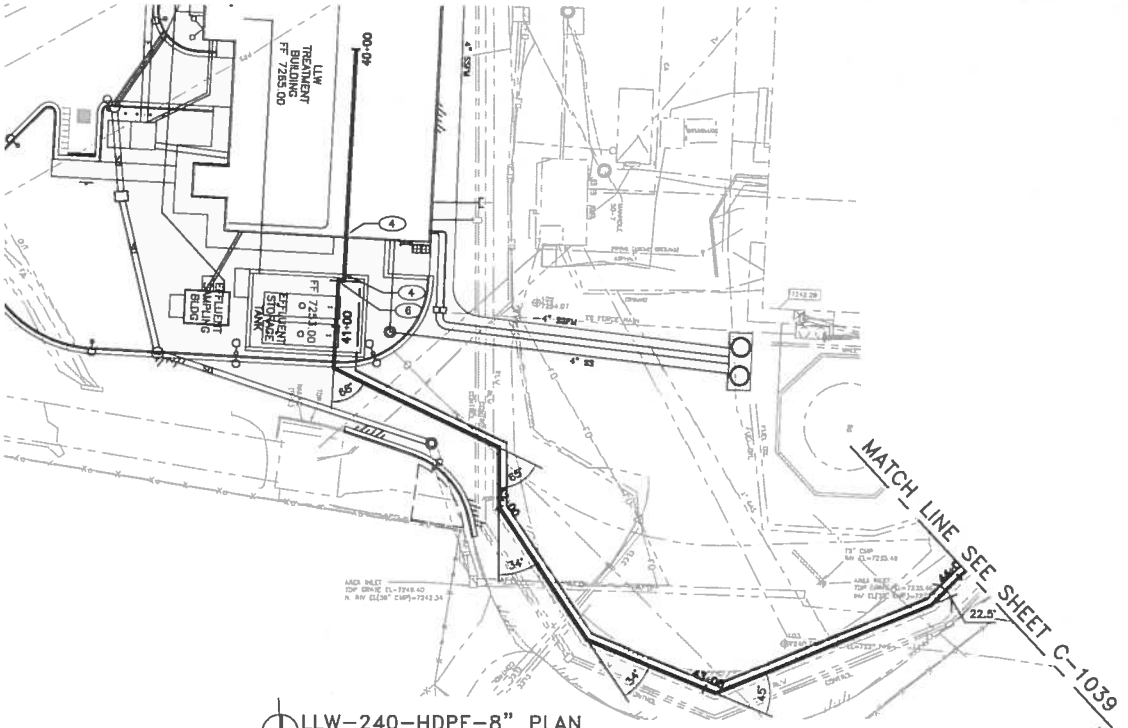

LLW-240-HDPE-8" PLAN

1"=20'-0" HORIZ.

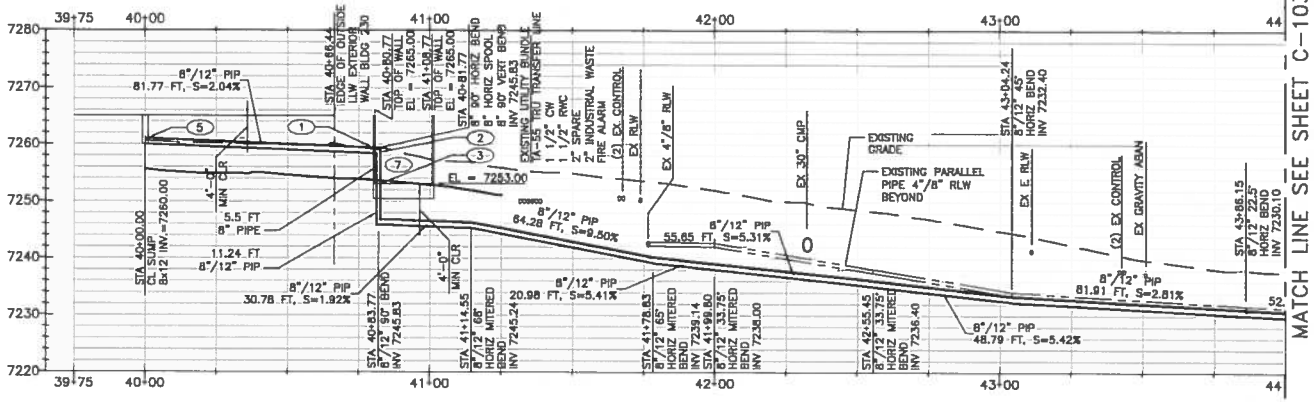

LLW-240-HDPE-8" PROFILE

1"=20'-0" HORIZ. 1"=10'-0" VERT

NO	DATE	CLASS REV	ADC	DESCRIPTION	DRW	DES	CHKD	SUB	APP

AECOM

RLWTF-UP LOW LEVEL WASTE SUBPROJECT

LLW-240-HDPE-8" PLAN AND PROFILE

BLDG. 230 TA-50

DRAWN C. MORGAN | DESIGN C. MORGAN | CHECKED M. TARIN | DATE 3/8/14

SUBMITTED MANNY TARIN | APPROVED FOR RELEASE ED ARTIOLIA

Los Alamos NATIONAL LABORATORY PO Box 1663 Los Alamos, New Mexico 87545

SHEET C-1038 | 45 OF 434

CLASSIFICATION | REVIEWER | DATE

PROJECT ID 100761 | DRAWING NO C55864 | REV 0

SEAL

Plotted By: MORGAN, CHRIS Plot Date: Wednesday, May 07, 2014

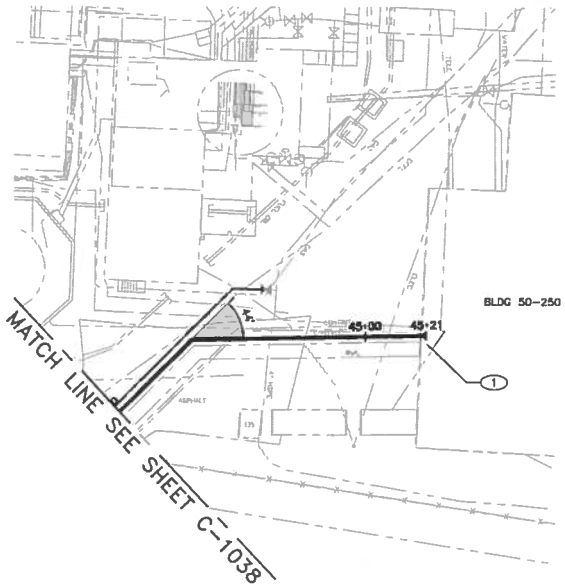

LLW-240-HDPE-8" PLAN

1"=20'-0" HORIZ.

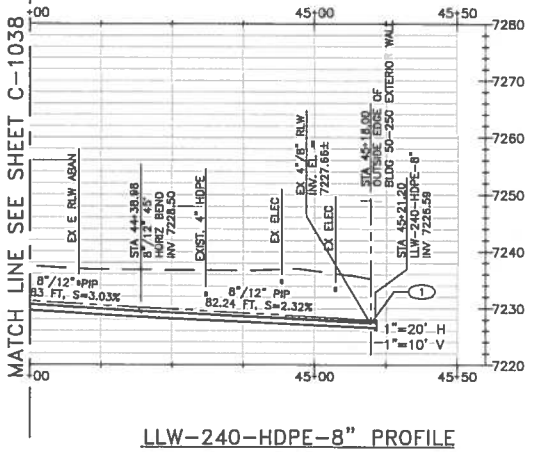

LLW-240-HDPE-8" PROFILE

1"=20'-0" HORIZ. 1"=10'-0" VERT.

GENERAL NOTES

1. IF THIS SHEET IS NOT 24"X 36" THEN IT IS A REDUCED PLOT. USE GRAPHIC SCALE ACCORDINGLY.
2. SUBCONTRACTOR SHALL FIELD VERIFY EXISTING UTILITIES PRIOR TO BEGINNING CONSTRUCTION.

KEYED NOTES

(1) HDPE PRIMARY PIPE SHALL TERMINATE AT LEAST 2 FEET INSIDE EXISTING BUILDING WALL (EVENTUALLY ROUTED INTO STORAGE TANKS). PROVIDE DOGBONE & 150# FLANGE (WITH BLIND FLANGE) ON PRIMARY.

NO	DATE	CLASS REV	ADC	DESCRIPTION	DWN	DES	CHKD	SUB	APP

AECOM

RLWTF-UP LOW LEVEL WASTE SUBPROJECT

LLW-240-HDPE-8" PLAN AND PROFILE

BLDG. 230 TA-50

DRAWN	C. MORGAN
DESIGN	C. MORGAN
CHECKED	M. TARIN
DATE	5/8/14

SUBMITTED MANNY TARIN

APPROVED FOR RELEASE ED ARTIGLIA

Los Alamos NATIONAL LABORATORY PO Box 1663 Los Alamos, New Mexico 87545

SHEET C-1039

46 OF 434

CLASSIFICATION | REVIEWER | DATE

PROJECT ID 100761 | DRAWING NO C55864 | REV 0

Plotted By: MORGAN, CHRIS; Plot Date: Wednesday, May 07, 2014

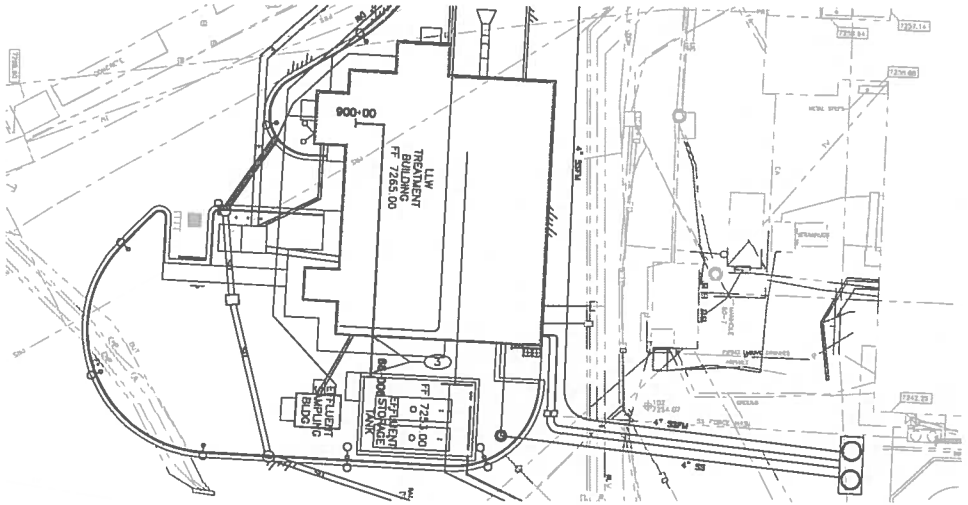

LLW-283-HDPE 1 1/2" PLAN

20' 10' 0 10' 20'
1"=20'-0"

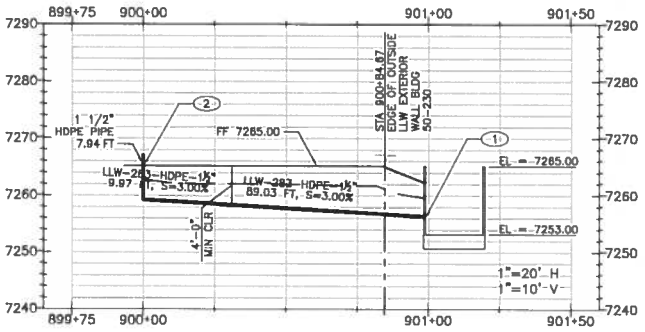

LLW-283-HDPE 1 1/2" PROFILE

20' 10' 0 10' 20'
1"=20'-0"

10' 5' 0 5' 10'
1"=10'-0" VERT.

GENERAL NOTES

1. IF THIS SHEET IS NOT 24"X 36" THEN IT IS A REDUCED PLOT. USE GRAPHIC SCALE ACCORDINGLY.
2. SUBCONTRACTOR SHALL FIELD VERIFY EXISTING UTILITIES PRIOR TO BEGINNING CONSTRUCTION.

KEYED NOTES

1. EXTEND 150# FLANGE ON PRIMARY 12 TO 13 INCHES BEYOND WALL WITH DOGBONE WITH MANUAL LEAK DETECTION VALVE. PROVIDE BLIND FLANGE WITH APPROVED GASKET AND FASTENERS.
2. EXTEND 150# FLANGE ON PRIMARY 12 TO 13 INCHES ABOVE FINISHED FLOOR WITH END OF LINE TERMINATION DOGBONE. PROVIDE BLIND FLANGE WITH APPROVED GASKET AND FASTENERS.
3. COORDINATE WITH STRUCTURAL FOR PENETRATION LOCATIONS AND SLEEVE ALIGNMENT. SEE SHEETS S-7101 AND S-7400.

NO	DATE	CLASS REV	ADC	DESCRIPTION	DWN	DES	CHKD	SUB	APP

AECOM

RLWTF-UP LOW LEVEL WASTE SUBPROJECT

LLW-283-HDPE-1.5" PLAN AND PROFILE

BLDG. 230 TA-50

DRAWN	C. MORGAN
DESIGN	C. MORGAN
CHECKED	M. TARIN
DATE	5/8/14

SUBMITTED MANNY TARIN

APPROVED FOR RELEASE ED ARTIGLIA

Los Alamos NATIONAL LABORATORY PO Box 1663 Los Alamos, New Mexico 87545

SHEET C-1040

47 OF 434

CLASSIFICATION | REVIEWER | DATE

PROJECT ID 100761 | DRAWING NO C55864 | REV 0

Plotted By: MORGAN, CHRIS; Plot Date: Wednesday, May 07, 2014

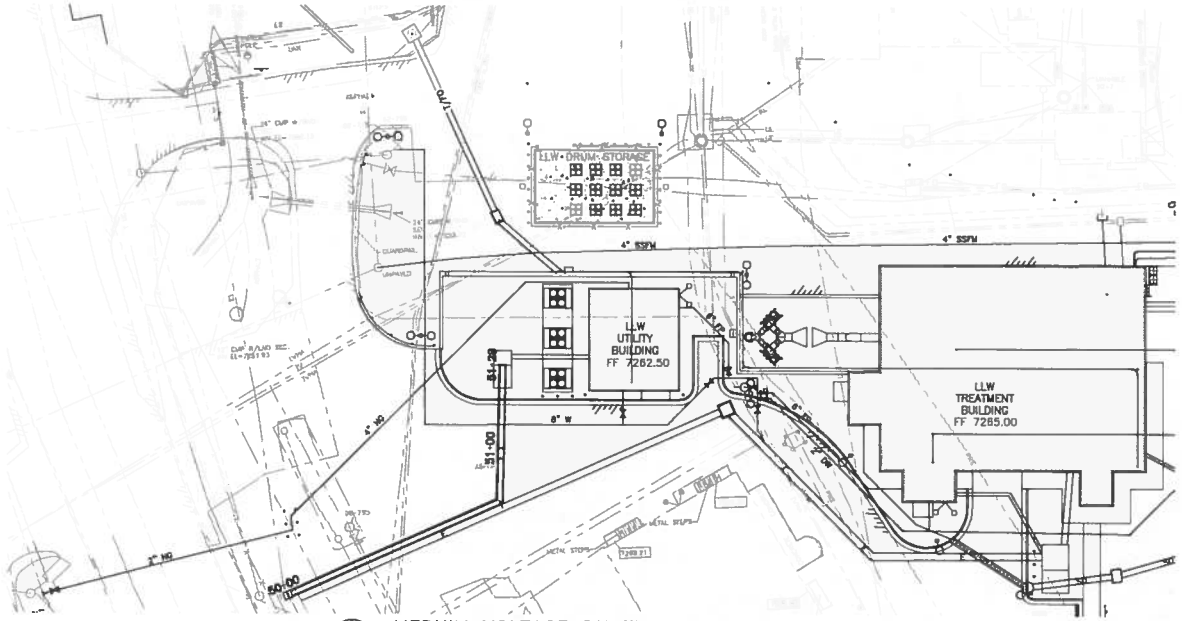

MEDUIM VOLTAGE DUCTBANK PLAN

1"=20'-0"

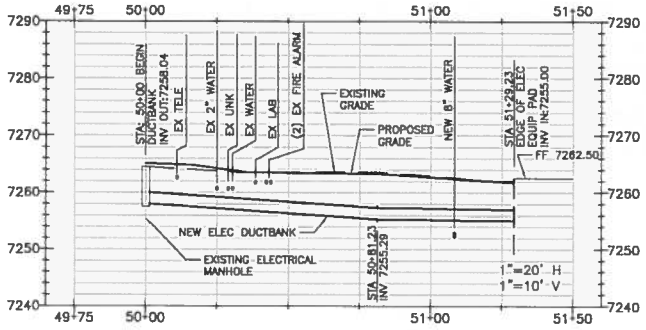

MEDIUM VOLTAGE DUCTBANK PROFILE

1"=20'-0" 1"=10'-0" VERT

GENERAL NOTES

1. IF THIS SHEET IS NOT 24"X 36" THEN IT IS A REDUCED PLOT. USE GRAPHIC SCALE ACCORDINGLY.
2. SUBCONTRACTOR SHALL FIELD VERIFY EXISTING UTILITIES PRIOR TO BEGINNING CONSTRUCTION.
3. CONDUITS SHALL DRAIN TO MANHOLE AT A MINIMUM RATE OF 4"/100' TO A SUITABLE SUMP EVEN IN A MANHOLE [LANL ESM ISD341-2 CHAPTER 7, SECTION 84010].
4. REFER TO ELECTRICAL SHEETS FOR INFORMATION.

NO	DATE	CLASS REV	ADC	DESCRIPTION	DWN	DES	CHKD	SUB	APP

AECOM

RLWTF-UP LOW LEVEL WASTE SUBPROJECT

MEDIUM VOLTAGE DUCTBANK PLAN AND PROFILE

BLDG. 230 TA-50

DRAWN	C. MORGAN
DESIGN	C. MORGAN
CHECKED	M. TARIN
DATE	3/3/14

SUBMITTED MANNY TARIN

APPROVED FOR RELEASE ED ARTIOLA

Los Alamos NATIONAL LABORATORY PO Box 1663 Los Alamos, New Mexico 87545

SHEET C-1041

48 OF 434

CLASSIFICATION REVIEWER DATE

PROJECT ID 100761

DRAWING NO C55864

REV 0

Plotted By: MORGAN, CHRIS Plot Date: Wednesday, May 07, 2014
e:\Facilities\RLWTF\ADD\d023431 - RLWTF\000 CAD\002 CAD DIRECTORY\ACCOM\LLW FACILITY\CIVIL 30\PLOTT-PIPE-BASE.DWG

GENERAL NOTES

1. IF THIS SHEET IS NOT 24"X 36" THEN IT IS A REDUCED PLOT. USE GRAPHIC SCALE ACCORDINGLY.
2. SUBCONTRACTOR SHALL FIELD VERIFY EXISTING UTILITIES PRIOR TO BEGINNING CONSTRUCTION.

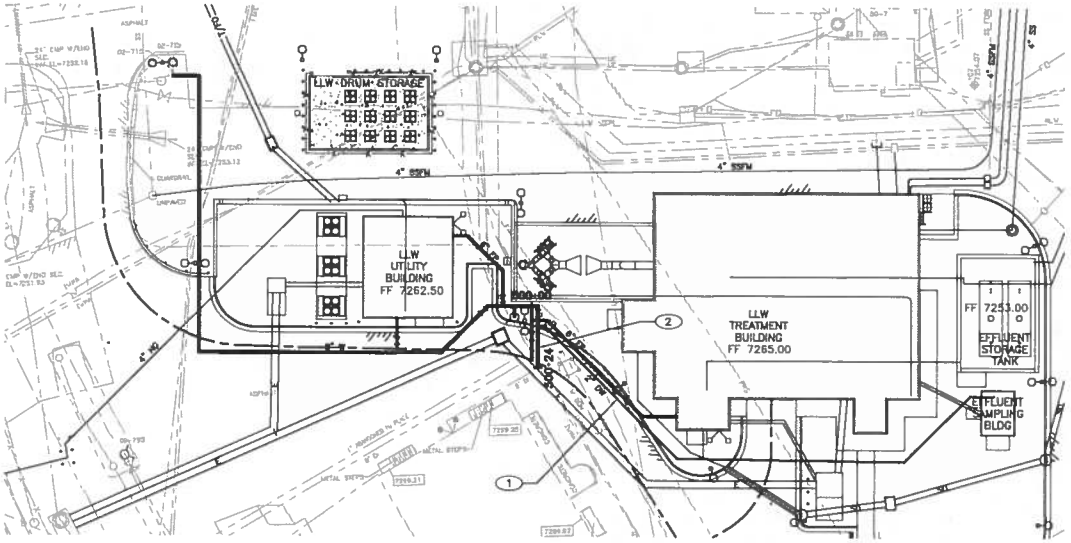

DOMESTIC WATER LINE TO EFFLUENT SAMPLING BUILDING PLAN

20' 10' 0 10' 20'
1"=20'-0"

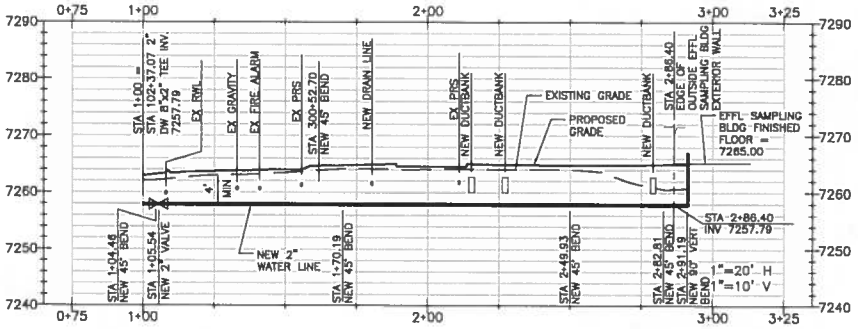

① DOMESTIC WATER LINE TO EFFLUENT SAMPLING BUILDING PROFILE

20' 10' 0 10' 20'
1"=20'-0"
10' 5' 0 5' 10'
1"=10'-0" VERT.

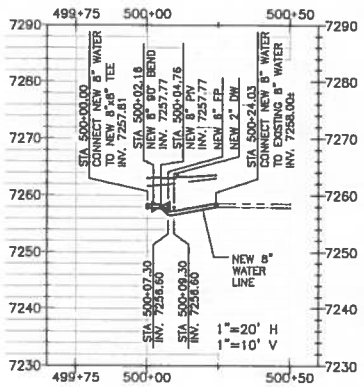

② 8" WATER LINE PROFILE

20' 10' 0 10' 20'
1"=20'-0"
10' 5' 0 5' 10'
1"=10'-0" VERT.

NO	DATE	CLASS REV	ADC	DESCRIPTION	DWN	DES	CHKD	SUB	APP

AECOM

RLWTF-UP LOW LEVEL WASTE SUBPROJECT

2" DOMESTIC WATER PLAN AND PROFILE

BLDG. 230 TA-50

DRAWN	C. MORGAN
DESIGN	C. MORGAN
CHECKED	M. TARIN
DATE	5/8/14

SUBMITTED: MANNY TARIN

APPROVED FOR RELEASE: ED ARTIGLIA

Los Alamos NATIONAL LABORATORY PO Box 1663 Los Alamos, New Mexico 87545

SHEET C-1042

49 OF 434

CLASSIFICATION | REVIEWER | DATE

PROJECT ID 100761 | DRAWING NO C55864 | REV 0

MANUEL TARIN III NEW MEXICO 18741 PROFESSIONAL ENGINEER 5/7/14

Plotted By: MORGAN, CHRIS; Plot Date: Thursday, May 22, 2014

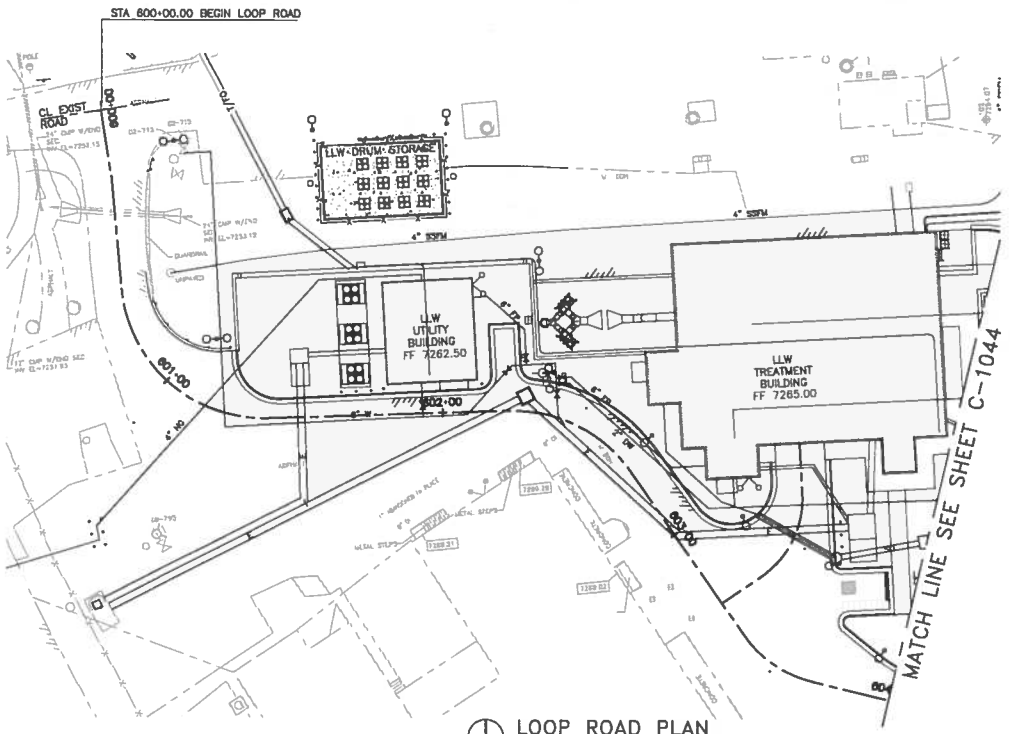

LOOP ROAD PLAN

20' 10' 0 10' 20'

1"=20'-0"

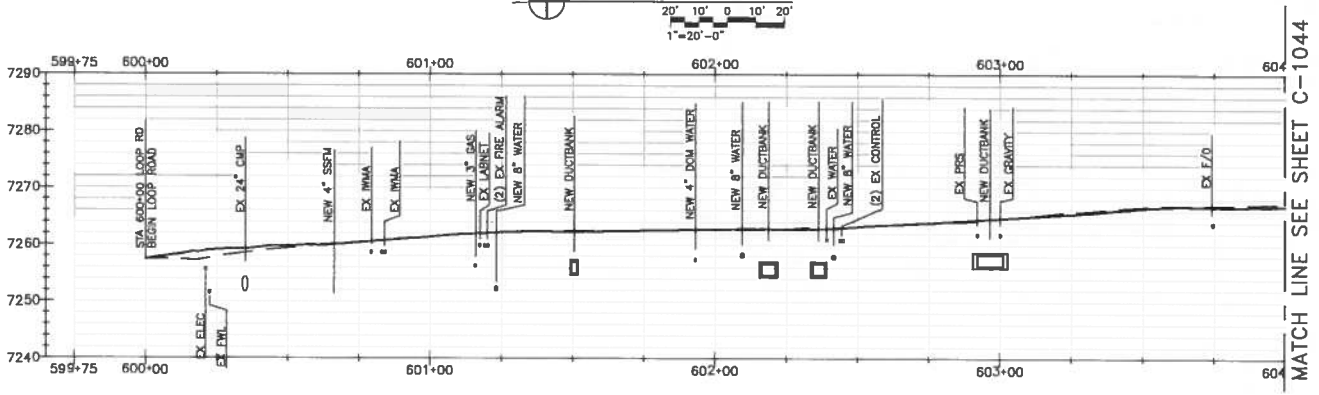

LOOP ROAD PROFILE

20' 10' 0 10' 20'

1"=20'-0"

16' 8' 0 8' 16'

1"=10'-0" VERT.

GENERAL NOTES

1. IF THIS SHEET IS NOT 24"X 36" THEN IT IS A REDUCED PLOT. USE GRAPHIC SCALE ACCORDINGLY.
2. SUBCONTRACTOR SHALL FIELD VERIFY EXISTING UTILITIES PRIOR TO BEGINNING CONSTRUCTION.

NO	DATE	CLASS REV	ADC	DESCRIPTION	DRW	DES	CHKD	SUB	APP

AECOM

RLWTF-UP LOW LEVEL WASTE SUBPROJECT

LOOP ROAD PLAN AND PROFILE

DRAWN C. MORGAN

DESIGN C. MORGAN

CHECKED M. TARIN

DATE 5/8/14

BLDG. 230 TA-50

SUBMITTED MANNY TARIN

APPROVED FOR RELEASE ED ARTIGLIA

Los Alamos NATIONAL LABORATORY PO Box 1663 Los Alamos, New Mexico 87545

SHEET C-1043

50 OF 434

CLASSIFICATION REVISION DATE

PROJECT ID 100761

DRAWING NO C55864

REV 0

100761 : 121101

File Location: P:_TECHNOLOGY\60238631 - RLWTF\300 CAD\302 CAD DIRECTORY\MORGAN\LLW FACILITY\C\CIVIL SDV\RLWTF-PIPE-BASE.DWG
Plotted By: MORGAN, CHRIS; Plot Date: Wednesday, May 07, 2014

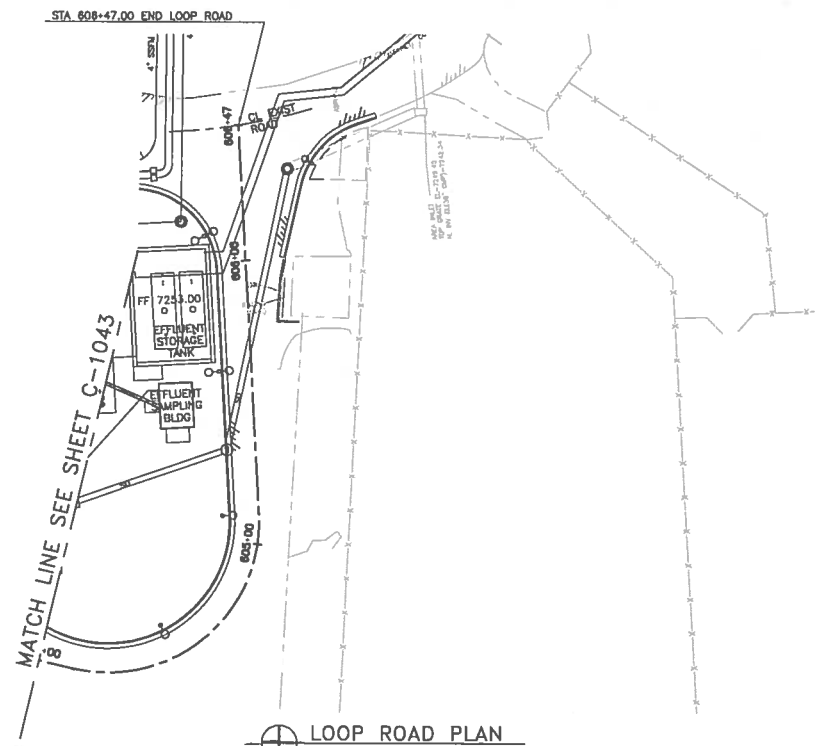

LOOP ROAD PLAN

20' 10' 0 10' 20'
1"=20'-0"

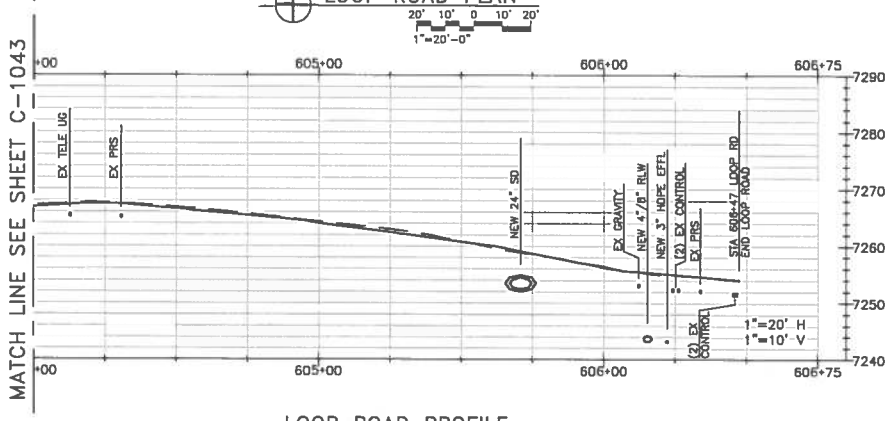

LOOP ROAD PROFILE

20' 10' 0 10' 20'
1"=20'-0"

10' 5' 0 5' 10'
1"=10'-0" VERT.

GENERAL NOTES

1. IF THIS SHEET IS NOT 24"X 36" THEN IT IS A REDUCED PLOT. USE GRAPHIC SCALE ACCORDINGLY.
2. SUBCONTRACTOR SHALL FIELD VERIFY EXISTING UTILITIES PRIOR TO BEGINNING CONSTRUCTION.

NO	DATE	CLASS REV	ADC	DESCRIPTION	DWN	DES	CHKD	SUB	APP

AECOM

RLWTF-UP LOW LEVEL WASTE SUBPROJECT

LOOP ROAD PLAN AND PROFILE

BLDG. 230 TA-50

DRAWN	C. MORGAN
DESIGN	C. MORGAN
CHECKED	M. TARIN
DATE	5/8/14

SUBMITTED MANNY TARIN

APPROVED FOR RELEASE ED ARTIGLIA

Los Alamos NATIONAL LABORATORY PO Box 1663 Los Alamos, New Mexico 87545

SHEET C-1044

51 OF 434

CLASSIFICATION | REVIEWER | DATE

PROJECT ID 100761 | DRAWING NO C55864 | REV 0

File Location: P:_TECHNOLOGY\60238831 - RLWTF\500 CAD\502 CAD DIRECTORY\AECOM\LLW FACILITY\C\DWL 3D\RLWTF-PIPE-BASE.DWG
Plotted By: MORGAN, CHRIS; Plot Date: Wednesday, May 07, 2014

: 121102

GENERAL NOTES

1. IF THIS SHEET IS NOT 24"X 36" THEN IT IS A REDUCED PLOT. USE GRAPHIC SCALE ACCORDINGLY.
2. SUBCONTRACTOR SHALL FIELD VERIFY EXISTING UTILITIES PRIOR TO BEGINNING CONSTRUCTION.

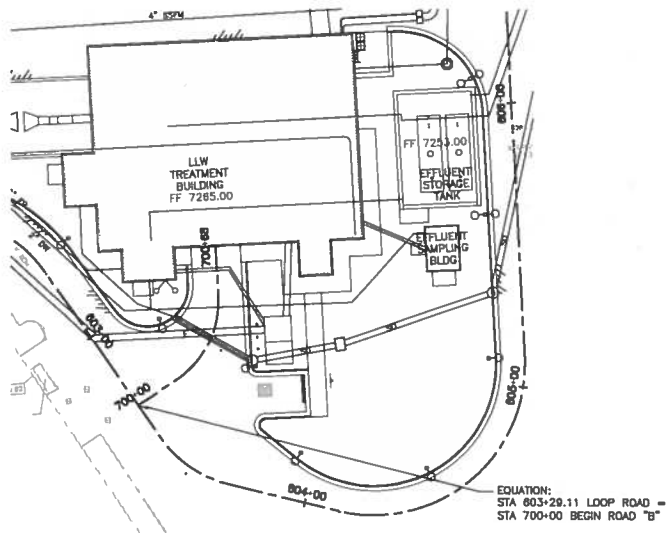

ROAD "B" PLAN

20' 10' 0 10' 20'
1"=20'-0"

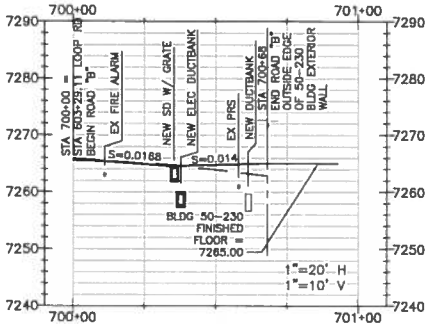

ROAD "B" PROFILE

20' 10' 0 10' 20'
1"=20'-0"

10' 5' 0 5' 10'
1"=10'-0" VERT.

NO	DATE	CLASS REV	ADC	DESCRIPTION	DWN	DES	CHKD	SUB	APP

AECOM

RLWTF-UP LOW LEVEL WASTE SUBPROJECT

ROAD "B" PLAN AND PROFILE

BLDG. 230 TA-50

DRAWN	C. MORGAN
DESIGN	C. MORGAN
CHECKED	M. TARIN
DATE	5/8/14

SUBMITTED MANNY TARIN

APPROVED FOR RELEASE ED ARTIGLIA

Los Alamos NATIONAL LABORATORY PO Box 1663 Los Alamos, New Mexico 87545

SHEET C-1045

52 OF 434

CLASSIFICATION | REVIEWER | DATE

PROJECT ID 100761 | DRAWING NO C55864 | REV 0

File Location: P:_TECHNOLOGY\60230631 - RLWTF\300 CAD\502 CAD DIRECTORY\AECOM\LLW FACILITY\C\CIVIL 3D\RLWTF-PIPE-BASE.DWG
Plotted By: MORGAN, CHRIS; Plot Date: Wednesday, May 07, 2014

: 121103

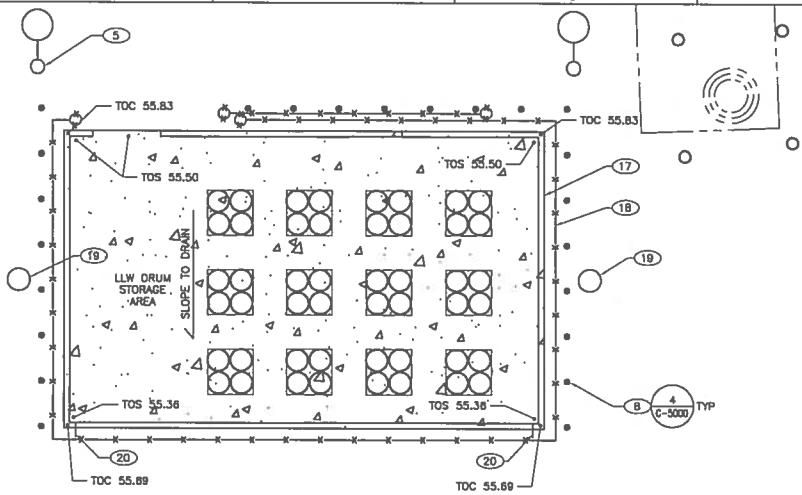

KEYED NOTES (CONT.)

15. NEW PIV, SEE DETAIL 4 ON SHEET C-5012.
16. PIPE RACK SUPPORT, SEE DETAIL 2 ON SHEET C-5012.
17. 4" HIGH x 8" WIDE CONCRETE CURB, REFER TO STRUCTURAL FOR DETAILS.
18. NEW CHAINLINK FENCE. SEE DETAIL 1 ON SHEET C55866-C-5300.
19. LIGHTNING PROTECTION MAST, SEE SHEET E-1003.
20. 1"ø SS PIPE WITH MANUAL BUTTERFLY VALVE FOR FLUID CONTAINMENT RELEASE, SEE SECTION A/C 55866-S-3300.
21. EXHAUST STACK FOUNDATION.
22. PIPE RACK SUPPORT, SEE DETAIL 3 ON SHEET C-5012.

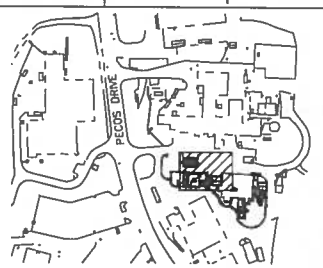

KEY PLAN
SCALE: NONE

GENERAL NOTES

1. IF THIS SHEET IS NOT 24"X 36" THEN IT IS A REDUCED PLOT. USE GRAPHIC SCALE ACCORDINGLY.
2. SUBCONTRACTOR SHALL FIELD VERIFY EXISTING UTILITIES PRIOR TO BEGINNING CONSTRUCTION.
3. BASELINE UTILITY DRAWINGS ARE ORIGINALS FROM LANL UMAP AND DO NOT CONFORM TO LANL DRAFTING STANDARDS MANUAL.
4. SEE SHEETS C-1018 THROUGH C-1022 FOR LAYOUT INFORMATION.

KEYED NOTES

1. NEW IN-GROUND GATE VALVE, SEE DETAIL 2 ON SHEET C-5001.
2. CONCRETE RETAINING WALL, SEE SHEETS C-1018 AND C-1019 FOR WALL GEOMETRY AND C-5005 FOR WIDTH AND REINFORCEMENT.
3. CONCRETE CURB AND GUTTER.
4. NEW ASPHALT PAVING.
5. NEW POLE MOUNTED LIGHTING.
6. FE-5309 AND FE-5310, WITH 4" EMBED PLATES, REFER TO SHEET C-5011 FOR EMBED DETAILS.
7. ASE-5300 ENCLOSURE.
8. 4 INCH CONCRETE FILLED PIPE BOLLARDS (29 TOTAL) SPACED AT 4'-0" O.C.
9. PIPE RACK SUPPORT, SEE DETAIL 1 ON SHEET C-5012.
10. CONCRETE STOOP, SEE SECTION 4 ON SHEET C-5007.
11. NRC-5319A&B AND NRC-5320A&B WITH CONCRETE PAD.
12. NEW FIRE HYDRANT, SEE DETAIL 5 ON SHEET C-5001.
13. GUARD RAILS TO BE INSTALLED ON ALL RETAINING WALLS UNLESS OTHERWISE NOTED, SEE DETAIL 1/S-1401.
14. EXHAUST STACK.

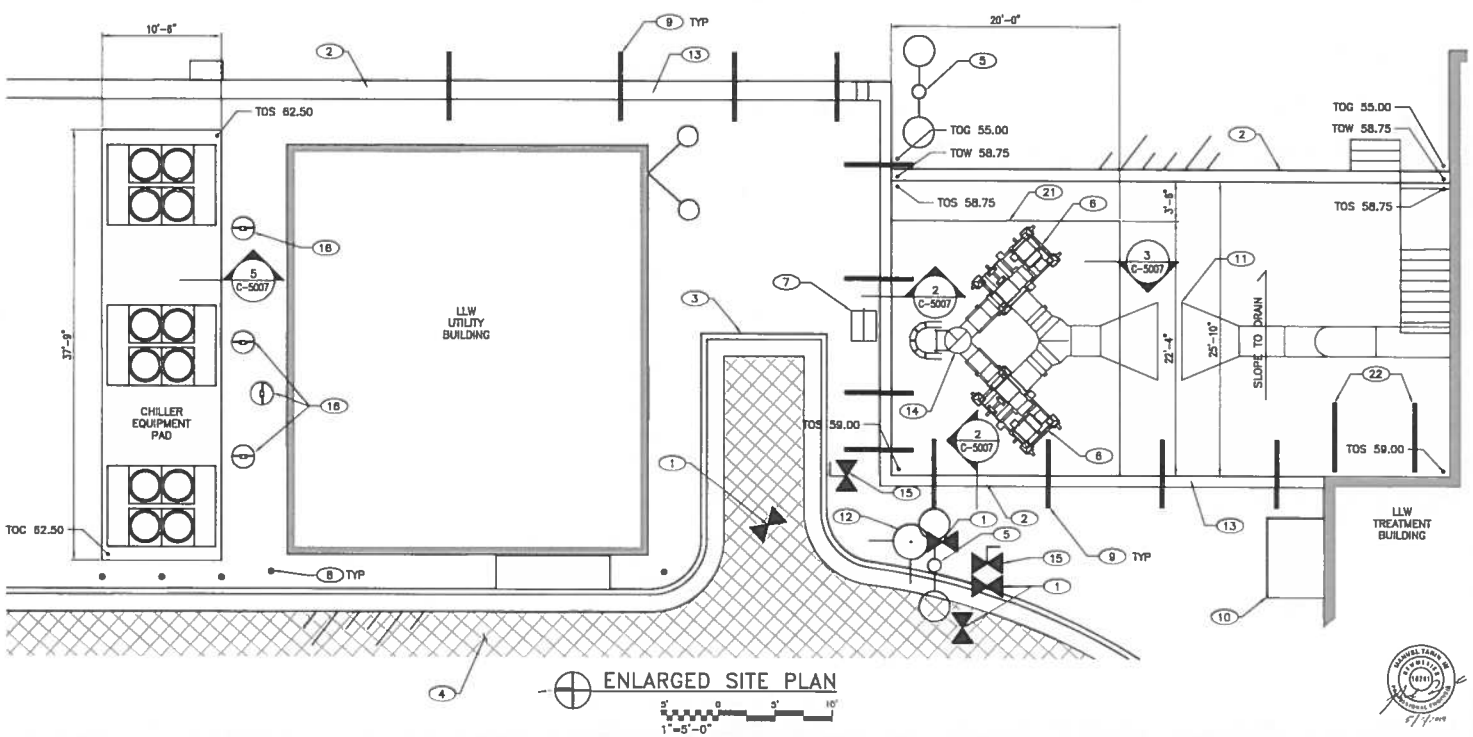

ENLARGED SITE PLAN
1"=5'-0"

NO	DATE	CLASS REV	ADC	DESCRIPTION	DWN	DES	CHKD	SUB	APP

AECOM

RLWTF-UP LOW LEVEL WASTE SUBPROJECT

ENLARGED SITE PLAN

BLDG. 230 TA-50

DRAWN	C. MORGAN
DESIGN	C. MORGAN
CHECKED	M. TARIN
DATE	3/3/14

SUBMITTED MANNY TARIN

APPROVED FOR RELEASE ED ARTIGLIA

Los Alamos NATIONAL LABORATORY PO Box 1663 Los Alamos, New Mexico 87545

SHEET C-4000

53 OF 434

CLASSIFICATION | REVISION | DATE

PROJECT ID 100761

DRAWING NO C55864

REV 0

Plotted By: BRENNAN, DARLENE Plot Date: Tuesday, May 06, 2014

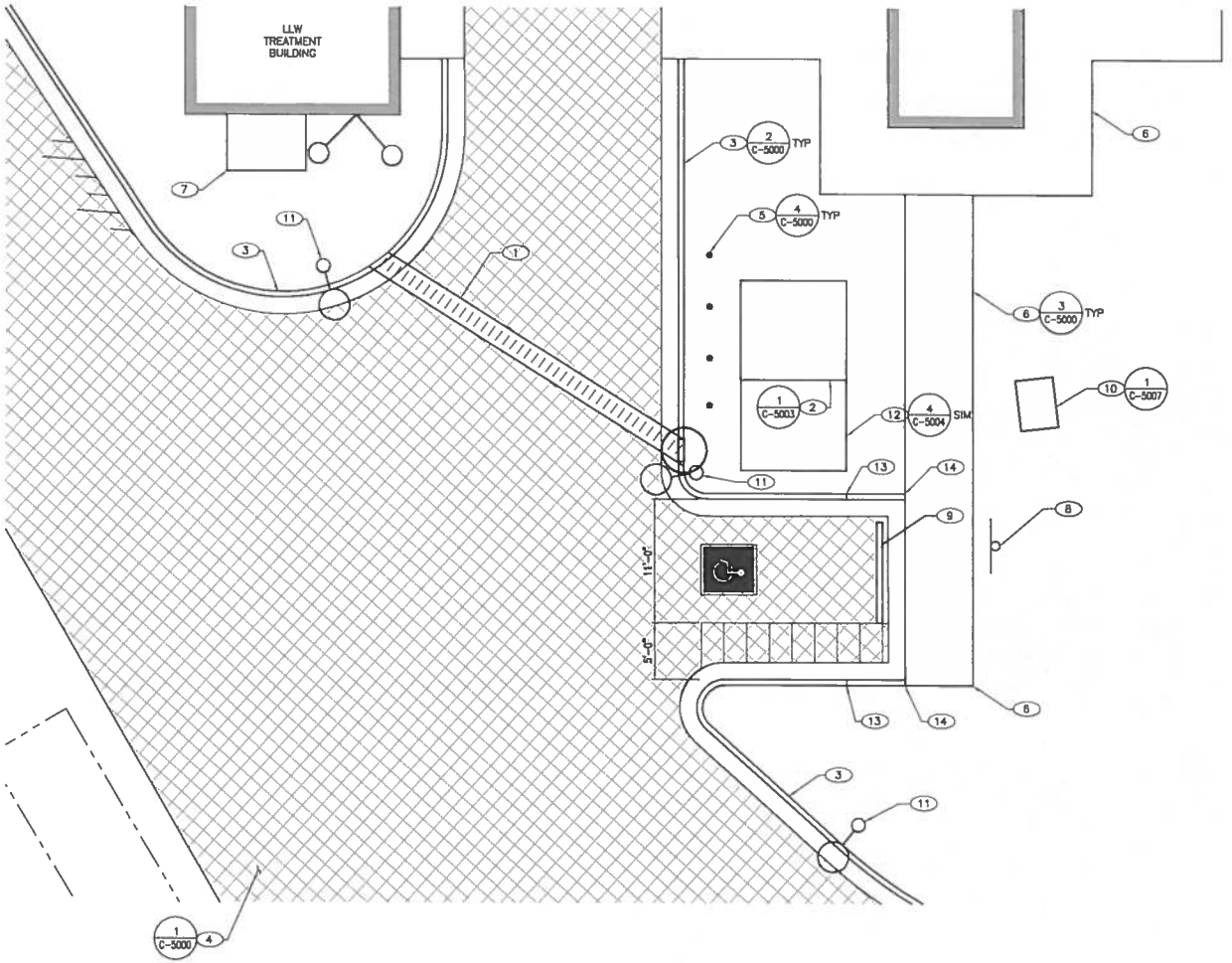

ENLARGED SITE PLAN

1"=5'-0"

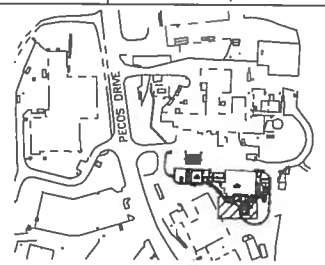

KEY PLAN
SCALE: NONE

GENERAL NOTES

1. IF THIS SHEET IS NOT 24"X 36" THEN IT IS A REDUCED PLOT. USE GRAPHIC SCALE ACCORDINGLY.
2. SUBCONTRACTOR SHALL FIELD VERIFY EXISTING UTILITIES PRIOR TO BEGINNING CONSTRUCTION.
3. BASELINE UTILITY DRAWINGS ARE ORIGINALS FROM LANL UMAP AND DO NOT CONFORM TO LANL DRAFTING STANDARDS MANUAL.
4. SEE SHEETS C-1018 THROUGH C-1022 FOR LAYOUT INFORMATION.

KEYED NOTES

(1) UNDERGROUND STORM DRAINAGE CULVERT.
(2) NEW XFMR-A TRANSFORMER PAD.
(3) CONCRETE CURB AND GUTTER.
(4) NEW ASPHALT PAVING.
(5) 4 INCH CONCRETE FILLED PIPE BOLLARDS (29 TOTAL) SPACED AT 4'-0" O.C.
(6) CONCRETE SIDEWALK.
(7) CONCRETE STOOP, SEE SECTION 4 ON SHEET C-5007.
(8) NEW SIGN "HANDICAP PARKING ONLY".
(9) CONCRETE CAR STOP.
(10) NEW STORM DRAIN DROP INLET.
(11) POLE MOUNTED LIGHTING, SEE SHEET E-1002.
(12) NEW XFMR APRON SLAB.
(13) BEGIN TOP OF CONCRETE CURB TAPER.
(14) END TOP OF CONCRETE CURB TAPER, FLUSH WITH SIDEWALK.

NO	DATE	CLASS REV	ADC	DESCRIPTION	DWN	DES	CHKD	SUB	APP

AECOM

RLWTF-UP LOW LEVEL WASTE SUBPROJECT

ENLARGED SITE PLAN

BLDG. 230 TA-50

DRAWN	C. MORGAN
DESIGN	C. MORGAN
CHECKED	M. TARIN
DATE	3/8/14

SUBMITTED MANNY TARIN

APPROVED FOR RELEASE ED ARTIOLIA

Los Alamos NATIONAL LABORATORY PO Box 1663 Los Alamos, New Mexico 87545

SHEET C-4001

54 OF 434

CLASSIFICATION | REVIEWER | DATE

PROJECT ID 100761 | DRAWING NO C55864 | REV 0

Plotted By: BROWN, DARLENE Plot Date: Tuesday, May 06, 2014
File Location: P:\CAD\MicroStation\ADS\39531 - RLWTF\DGN CAD\USER CAD\ DIRECTORY\AECOM\LLW FACILITY\LAYSHEET\A5884-C-4001-RELDWG

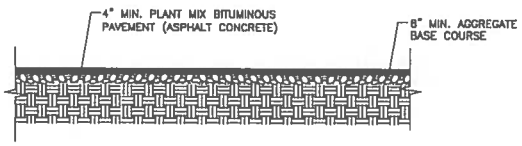

SECTION VIEW

1 C-4001 / 1 C-1003 ROAD DETAIL
SCALE: NONE

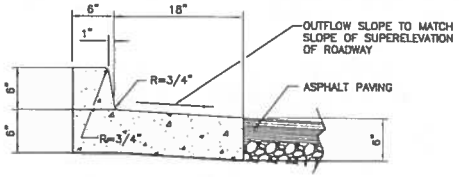

REVERSE OUTFLOW

2 C-4001 / 2 C-1003 CURB AND GUTTER DETAIL
SCALE: NONE

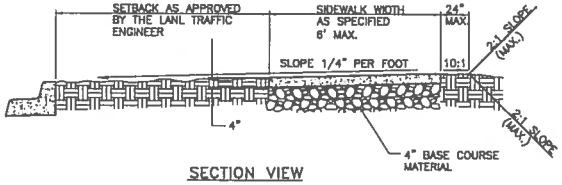

SECTION VIEW

3 C-4001 / 3 C-1003 SIDEWALK DETAIL
SCALE: NONE

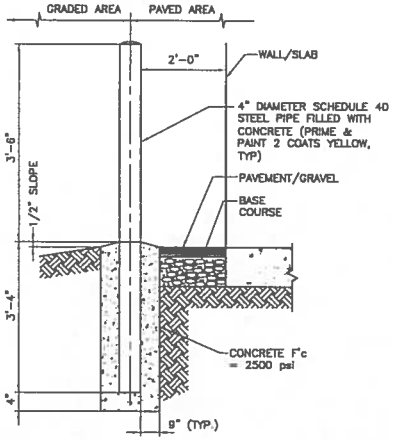

SECTION VIEW

4 C-4001 / 4 C-5000 / 4 P-5200 / 4 C-1003 / 4 C-1004 TYPICAL BOLLARD DETAIL
SCALE: NONE

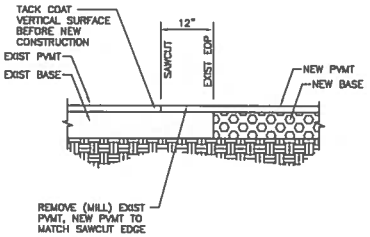

SECTION VIEW

5 C-1004 / 5 C-1005 / 5 C-1003 TIE-IN TO EXISTING PAVEMENT
SCALE: NONE

GENERAL NOTES

1. PLACE 1/2" WIDE PREMOLDED EXPANSION JOINT FILLER MATERIAL AT INTERVALS NOT TO EXCEED 3 CONTROL JOINTS.
2. PLACE PREMOLDED EXPANSION JOINT FILLER MATERIAL BETWEEN SIDEWALKS AND STREET CURBS AND ANY OTHER RIGID STRUCTURES.
3. PLACE CONTROL JOINTS IN THE SIDEWALKS TO FORM A SQUARE. JOINTS MAY BE TOOLED OR SAWED AND SHALL EXTEND AT LEAST 1/3 OF THE DEPTH OF CONCRETE.
4. SIDEWALKS AND SIDEWALK RAMPS SHALL BE COMPLIANT WITH AMERICANS WITH DISABILITIES ACT (ADA) AND NEW MEXICO DOT STANDARD DRAWINGS, SECTION 608.

NO	DATE	CLASS REV	ADC	DESCRIPTION	DRW	DES	CHKD	SUB	APP

AECOM

RLWTF-UP LOW LEVEL WASTE SUBPROJECT

SITE DETAILS

DRAWN	C. MORGAN
DESIGN	C. MORGAN
CHECKED	M. TARIN
DATE	9/8/14

BLDG. 230 TA-50

SUBMITTED: MANNY TARIN

APPROVED FOR RELEASE: ED ARTEGUA

Los Alamos NATIONAL LABORATORY PO Box 1663 Los Alamos, New Mexico 87545

SHEET C-5000

55 OF 434

CLASSIFICATION | REVIEWER | DATE

PROJECT ID 100761 | DRAWING NO C55864 | REV 0

File Location: P:_TECHNOLOGY\W233831 - RLWTF\300 CAD\302 CAD DIRECTORY\AECOM\LLW FACILITY\<\SHEET\55864-C-5000-R0.DWG
Plotted By: BROERMAN, DARLENE Plot Date: Tuesday, May 06, 2014

: 12105

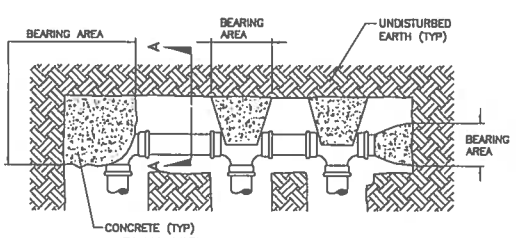

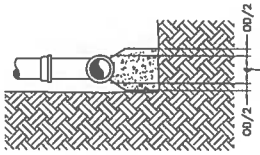

MIN. THRUST BLOCK AREA (SQUARE FEET)			
PIPE DIA.	PLUG TEE	90° BEND	45° BEND
4"	2	2	2
6"	4	5	3
8"	6	8	5
10"	9	13	7
12"	13	18	10
14"	18	25	14
16"	23	32	18

1 C-5001 THRUST BLOCKING DETAIL
SCALE: NONE

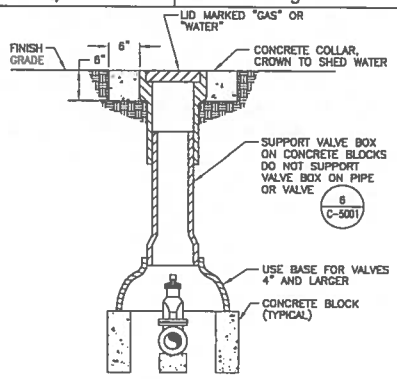

2 C-4000 2 C-1009 2 C-5001 VALVE BOX DETAIL
SCALE: NONE

KEYED NOTES

1. LANL UTILITIES WILL NUMBER (METAL STAMP) THE FIRE HYDRANT AND VALVE BOX LID.
2. ATTACH LABEL – CAUTION: NON-POTABLE WATER, DO NOT DRINK. REQUIRED ONLY FOR HYDRANTS SERVED BY NON-POTABLE WATER ON DEDICATED FIRE LOOPS.
3. PROVIDE PERMANENTLY MOUNTED METAL SIGN, TO NOTE WHICH BUILDING THE PIV SERVES. BUILDING TEXT SHALL READ SIMILAR TO "BUILDING 230, AUTOMATIC SPRINKLER SYSTEM". SIGN SHALL BE RED WITH WHITE 1-INCH BLOCK TYPE LETTERS. SIZE SHALL BE 10-INCHES LONG BY 5-INCHES HIGH, NOT LESS THAN 10 GUAGE METAL. SIGN SHALL BE SECURELY ATTACHED BY BOLTS OR STEEL RODS.

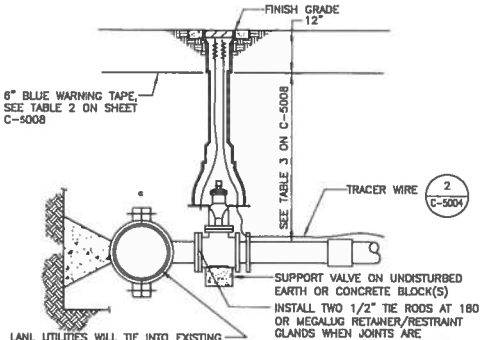

3 C-5001 WATER PIPING TIE-IN DETAIL 3" TO 12" LINE SIZE
SCALE: NONE

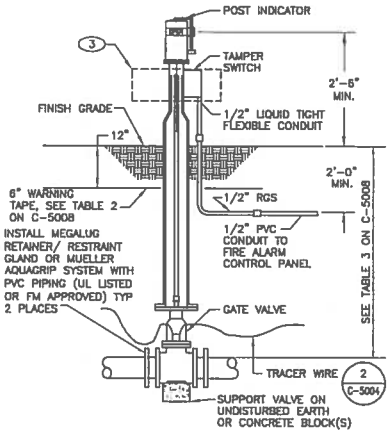

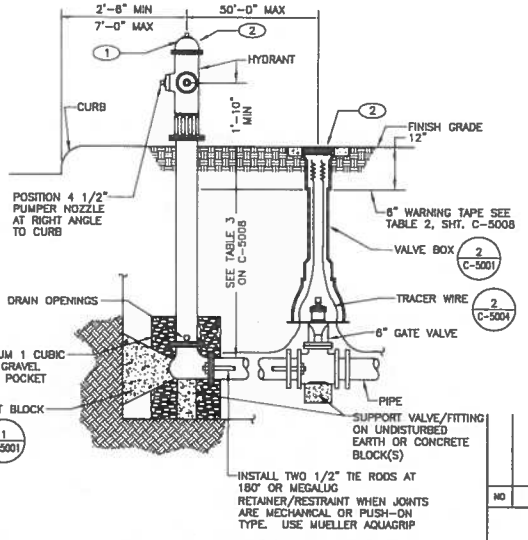

5 C-1009 FIRE HYDRANT DETAIL
SCALE: NONE

GENERAL NOTES

1. CONCRETE f'c=2500 PSI MINIMUM.
2. BASE AREA MAY BE MODIFIED WHEN SUBSTITUTING PRECAST BLOCK.
3. BLOCK OR SUPPORT MUST BE UNIFORMLY SUPPORTED FROM BELOW BY UNDISTURBED SOIL.
4. AT TOP OF SUPPORT, ALLOW SUFFICIENT ROOM FOR ACCESS TO FLANGE CONNECTIONS.

4 C-4000 4 C-1003 POST INDICATOR VALVE DETAIL
SCALE: NONE

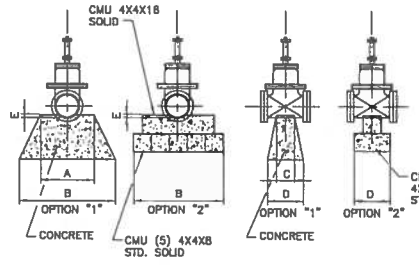

GROUNDED PER LANL STANDARDS

6 C-5001 WATER VALVE SUPPORT DETAIL
SCALE: NONE

VALVE SUPPORT TABLE				
VALVE SIZE	A	(MIN) B	C	(MIN) D
6"	12"	20"	4"	4"
8"	14"	24"	4"	4"
10"	16"	26"	5"	5"
12"	18"	28"	5"	5"
14"	20"	30"	6"	6"
16"	22"	32"	8"	8"
18"	24"	34"	10"	10"

E=1-1/2" MORTAR BED "CRADLE"

NO	DATE	CLASS REV	ADC	DESCRIPTION	DWN	DES	CHKD	SUB	APP

AECOM

RLWTF-UP LOW LEVEL WASTE SUBPROJECT

UTILITY DETAILS

DRAWN C. MORGAN
DESIGN C. MORGAN
CHECKED M. TARIN
DATE 5/8/14

BLDG. 230 TA-50

SUBMITTED MANNY TARIN
APPROVED FOR RELEASE ED ARTEGLIA

Los Alamos NATIONAL LABORATORY PO Box 1663 Los Alamos, New Mexico 87545

SHEET C-5001
56 OF 434

CLASSIFICATION REVISION DATE

PROJECT ID 100761
DRAWING NO C55864
REV 0

File Location: P:_TECHNOLOGY\RX239531 - RLWTF\300 CAD\302 CAD DIRECTORY\ADCAD\LLW FACILITY\SHEET\530664-C-5001-ROLDWG
Plotted By: BROCKMAN, DARLENE Plot Date: Tuesday, May 06, 2014

121QT

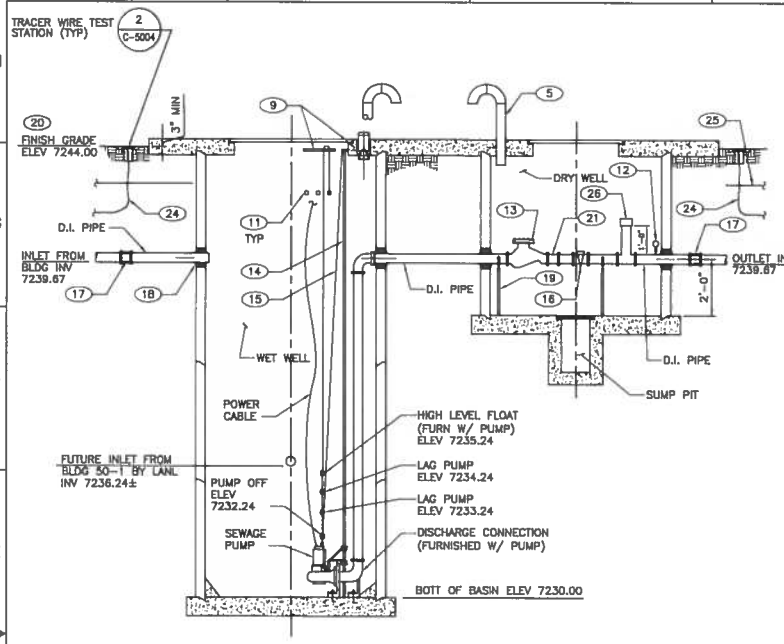

SECTION A-A

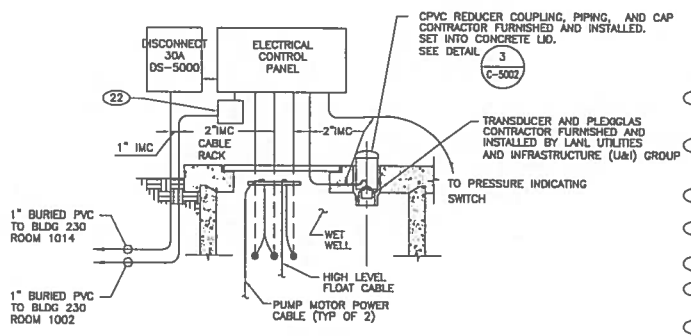

SECTION VIEW

2 C-5002 ELECTRICAL DETAIL SCALE: NONE

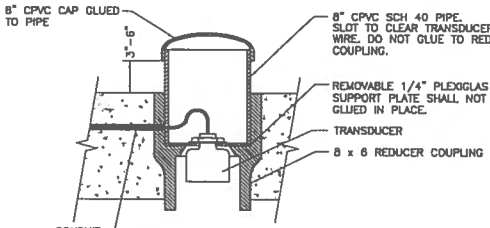

SECTION VIEW

3 C-5002 TRANSDUCER MOUNTING DETAIL SCALE: NONE

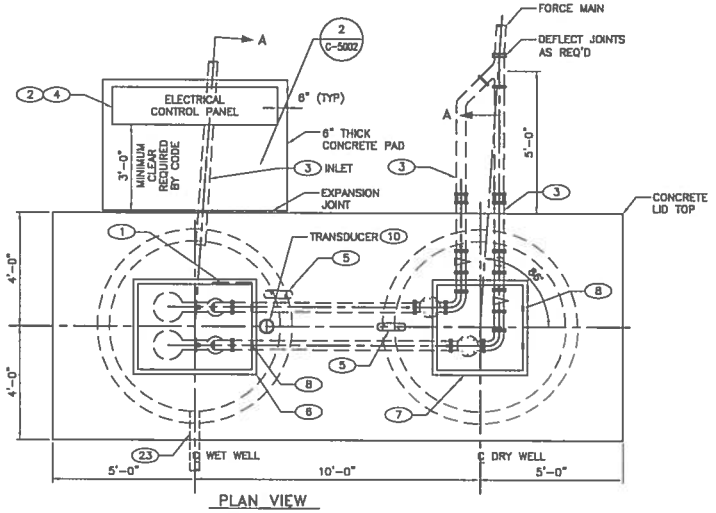

PLAN VIEW

1 C-1011 LIFT STATION SCALE: 1/2"=1'-0"

GENERAL NOTES

1. SEE DETAIL 1 C-5001 FOR THRUST BLOCK/RESTRAINT REQUIREMENTS.

KEYED NOTES

1. LOCATE CABLE RACK ON SAME SIDE OF CONTROL PANEL. DO NOT LOCATE TRANSDUCER AND FLOAT IN DIRECT LINE WITH INLET AND DISCHARGE LINES.
2. LOCATE TOP OF ELECTRICAL CONTROL PANEL 6 FEET ABOVE CONCRETE PAD. CONTROL PANEL TO BE CENTERED OPPOSITE OF WET WELL.
3. 4" PIPE. INSTALL THRUST BLOCKS AND RESTRAINTS AT FORCE MAIN ANGLE FITTING.
4. LOCATION OF ALARM BEACON WITH FLASHER SHALL BE VISIBLE TO ROAD TRAFFIC AND NOT BEHIND BUILDING OR IN LOW AREA.
5. VENT PIPE.
6. 48" X 36" HINGED ACCESS DOOR AND FRAME WITH HINGED SAFETY GRATING (FURNISHED WITH PUMP).
7. 36" X 36" HINGED ACCESS DOOR AND FRAME WITH HINGED SAFETY GRATING (FURNISHED WITH PUMP).
8. ACCESS DOOR HINGES (TYP.)
9. SEE ELECTRICAL DETAIL 2 THIS SHEET.
10. LOCATE TO PROVIDE CLEAR SPACE BELOW FOR INSTALLATION.
11. CONDUITS FROM ELECTRICAL CONTROL PANEL. SEAL OPEN ENDS W/MASTIC WATERPROOF SEALANT.
12. PRESSURE GUAGE 0-100 PSI. INSTALL GAUGE FACE IN HORIZONTAL PLANE, FACING DRY WELL OPENING, WITH ISOLATION VALVE.
13. FLANGED BALL CHECK VALVE (FURNISHED WITH PUMP).
14. STAINLESS STEEL GUIDE BARS FOR PUMP REMOVAL (FURNISHED WITH PUMP).
15. STAINLESS STEEL LIFTING CHAIN (FURNISHED WITH PUMP).
16. FLANGED PLUG VALVE (FURNISHED WITH PUMP).
17. USE DRESSER TYPE COUPLINGS WHEN JOINING DISSIMILAR PIPING MATERIALS (TYP).
18. NON-SHRINK, NONMETALLIC GROUT (TYP).
19. 2" ADJUSTABLE PIPE SUPPORT (TYP.)
20. SLOPE FINISH GRADE AWAY FROM CONCRETE LID.
21. PIPE SPOOL LENGTH TO BE 2 TIMES THE PIPE DIAMETER.
22. INSTALL WEATHER-TIGHT ENCLOSURE FOR TELECOMMUNICATIONS CABLE.

KEYED NOTES (CONT.)

23. FUTURE INLET FROM BLDG 50-1. COORDINATE WITH LANL FOR TIE-IN.
24. TRACER WIRE.
25. 6" WARNING TAPE (TYP). SEE TABLE 2 ON SHEET C-5008.
26. 4" RISER WITH VALVE AND COUPLING CONNECTOR, REFER TO SPECIFICATION 33 3200.

NO	DATE	CLASS REV	ADC	DESCRIPTION	DRN	DES	CHKD	SUB	APP

AECOM

RLWTF-UP LOW LEVEL WASTE SUBPROJECT

SANITARY SEWER LIFT STATION DETAILS

BLDG. 230 TA-50

DRAWN	C. MORGAN
DESIGN	C. MORGAN
CHECKED	M. TARIN
DATE	5/8/14

SUBMITTED MANNY TARIN

APPROVED FOR RELEASE ED ARTIGLIA

Los Alamos NATIONAL LABORATORY PO Box 1663 Los Alamos, New Mexico 87545

SHEET C-5002

57 OF 434

CLASSIFICATION REVIEWER DATE

PROJECT ID 100761

DRAWING NO C55864

REV 0

File Location: P:_TECHNOLOGY\60230531 - RLWTF\300 CAD\302 CAD DIRECTORY\AECOM\LLW FACILITY\C\SHEET\55864-C-5002-RELDWG
Plotted By: MORGAN, CHRIS; Plot Date: Thursday, May 15, 2014

20T1 : 12108

3-PHASE TRANSFORMER KVA	PAD DIMENSIONS					REINFORCING BARS				
	A	B	C	D	E	MK1*	MK2*	MK3*	MK4*	MK5
(XFMR-B)	6'-4"	5'-2"	10"	3'-6"	6"	7#4 70" LONG	6#4 10" LONG	6#4 57" LONG	6#4 28" LONG	4#4 28" LONG
(XFMR-A)	8'-10"	9'-4"	10"	4'-6"	6"	12#4 98"	6#4 19"	9#4 106"	7#4 78"	4#4 28"

* INDICATES BAR LENGTH WITH STANDARD HOOK.

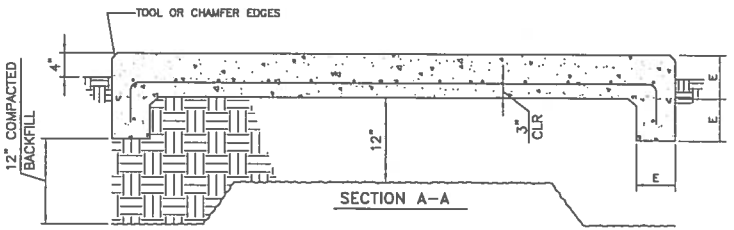

SECTION A-A

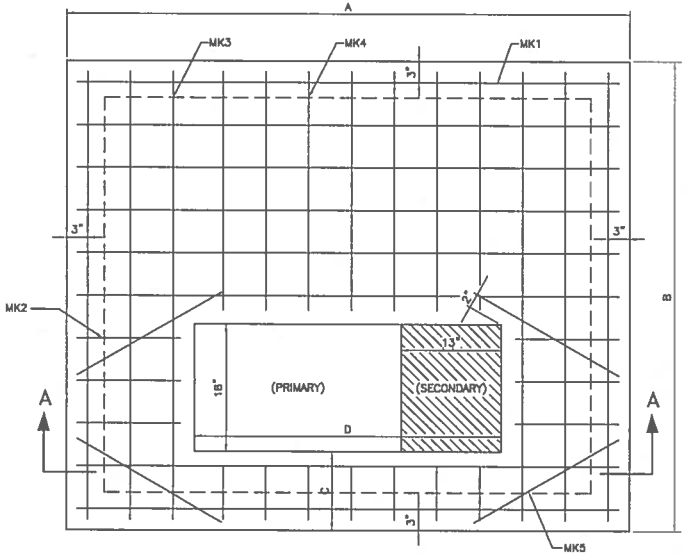

PLAN VIEW

1 C-1003 TRANSFORMER PAD DETAIL
SCALE: NONE

GENERAL NOTES:

1. CONCRETE TESTING: 3000 LBS. MIN. PER SQ. INCH; 4% TO 6% ENTRAINED AIR, 3/4" MAXIMUM SIZE AGGREGATE.
2. REINFORCING STEEL: ASTM-A615 GRADE 60, PLACE APPROX. 6" O.C. EACH WAY AND SECURELY TIED TOGETHER.
3. MINIMUM CONCRETE COVER OVER REINFORCING STEEL 2" UNLESS OTHERWISE NOTED.
4. WOOD FLOAT FINISH, LEAVING NO DEPRESSIONS.

NO	DATE	CLASS REV	ADC	DESCRIPTION	DRWN	DES	CHKD	SUB	APP

AECOM

RLWTF-UP LOW LEVEL WASTE SUBPROJECT

TRANSFORMER PAD DETAIL

BLDG. 230 TA-50

DRAWN	C. MORGAN		
DESIGN	C. MORGAN		
CHECKED	M. TARIN		
DATE	2/8/14		

SUBMITTED MANNY TARIN

APPROVED FOR RELEASE ED ARTIGLIA

Los Alamos NATIONAL LABORATORY PO Box 1663 Los Alamos, New Mexico 87545

SHEET C-5003

58 OF 434

CLASSIFICATION | REVIEWER | DATE

PROJECT ID 100761 | DRAWING NO C55864 | REV 0

File Location: P:_TECHNOLOGY\60223831 - RLWTF\300 CAD\302 CAD DIRECTORY\ACCOM\LLW FACILITY\C\SHEET\55864-C-5003-RELDWG
Plotted By: BRODRIAN, DARLENE; Plot Date: Tuesday, May 06, 2014

60219

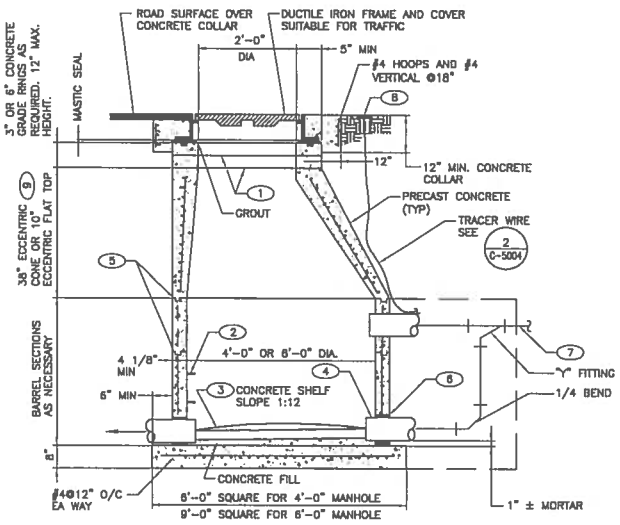

SECTION VIEW

1 C-1009 1 C-5004 MANHOLE DETAIL
SCALE: NONE

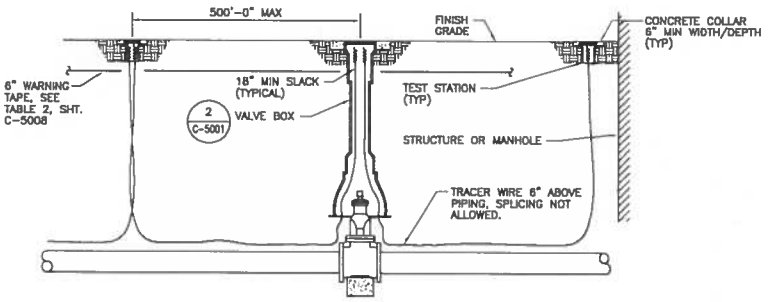

SECTION VIEW

2 C-5004 2 C-5002 2 C-5001 TRACER WIRE DETAIL
SCALE: NONE

GENERAL NOTES

1. RUN SERVICE LINE WITHIN 6" OF EXISTING MAIN.
2. MINIMUM BELL HOLE AT BOTTOM OF TRENCH: 24" FROM CENTERLINE OF NEW PIPE ON EACH SIDE; 18" FROM EDGE OF MAIN ON BACK SIDE; 8'-0" IN FRONT OF MAIN (LENGTH OF BELL HOLE); 18" UNDER MAIN. TAPER OR STEP TRENCH TO MEET OSHA REQUIREMENTS.
3. LANL REPRESENTATIVE/STR WILL ENSURE MATERIALS REQUIRED FOR HOT TAP ARE AT JOB SITE, DISINFECTING AND PRESSURE TESTING OF THE SERVICE LINE HAVE BEEN COMPLETED, AND EXCAVATION OF BELL HOLE IS DONE PRIOR TO NOTIFYING LANL UTILITIES.
4. LANL REPRESENTATIVE/STR WILL GIVE LANL UTILITIES 10 WORKING DAYS NOTICE OF THE NEED TO SCHEDULE A TIE-IN TO EXISTING UTILITIES.

KEYED NOTES

1. MASTIC AND/OR GROUT FOR WATER TIGHT SEAL AND PREVENTION OF DISPLACEMENT OF RINGS AND COVER.
2. INSTALL TWO BOTTOM STEPS ABOVE OUTLET IN 6' DIA. MANHOLE.
3. FORM FLOW CHANNELS THRU MANHOLE THE FULL SIZE OF SEWER MAINS CONFORMING TO THE CROSS SECTION OF PIPE; SHAPE AND TROWEL SMOOTH.
4. STOP ALL PIPE 1" INTO MANHOLE.
5. CLEAN ALL JOINTS AND INSTALL SEALING GASKETS.
6. GROUT WATER STOP OR GASKET WATER STOP FOR PLASTIC PIPE (TYP).
7. USE DROP WHERE INVERT CAN NOT BE SET AT MANHOLE FLOWLINE.
8. TEST STATION WITH 6" CONCRETE COLLAR.
9. DO NOT USE FLAT TOPS IN PARKING LOTS OR ROADWAYS.

NO	DATE	CLASS REV	ADC	DESCRIPTION	DWN	DES	CHKD	SUB	APP

AECOM

RLWTF-UP LOW LEVEL WASTE SUBPROJECT

MISCELLANEOUS UTILITY DETAILS

BLDG. 230 TA-50

DRAWN	C. MORGAN
DESIGN	C. MORGAN
CHECKED	M. TARIN
DATE	5/8/14

SUBMITTED MANNY TARIN

APPROVED FOR RELEASE ED ARTIGLIA

Los Alamos NATIONAL LABORATORY PO Box 1663 Los Alamos, New Mexico 87545

SHEET C-5004

59 OF 434

CLASSIFICATION | REVIEWER | DATE

PROJECT ID 100761 | DRAWING NO C55864 | REV 0

File Location: P:_TECHNOLOGY\60239831 - RLWTF\500 CAD\502 CAD DIRECTORY\AECOM\LLW FACILITY\C\SHEET\55864-C-5004-RD.DWG
Plotted By: BRODERMAN, DARLENE; Plot Date: Tuesday, May 06, 2014

12110

CONCRETE SITE RETAINING WALL SCHEDULE										
H MAX (SEE NOTE 3)	TOE	HEEL	FTG WIDTH	VERT WALL BARS	HORZ WALL BARS	FTG DEPTH	FTG BARS	KEY DEPTH	KEY BARS	STEM/WALL WIDTH
12'-0" TO 16'-0"	5'-6"	6'-2"	13'-6"	#9 @ 8"	#8 @ 12"	2'-6"	#9 @ 12"	2'-4"	#5 @ 24"	22"
8'-0" TO 12'-0"	5'-0"	3'-8"	10'-0"	#9 @ 12"	#7 @ 12"	2'-6"	#7 @ 12"	2'-4"	#5 @ 20"	16"
6'-0" TO 8'-0"	3'-0"	4'-0"	8'-0"	#7 @ 12"	#6 @ 12"	2'-6"	#7 @ 12"	2'-0"	#5 @ 16"	12"
4'-0" TO 6'-0"	2'-8"	3'-0"	8'-8"	#8 @ 12"	#6 @ 12"	2'-0"	#6 @ 12"	10"	#5 @ 8"	12"
3'-0" TO 4'-0"	2'-0"	2'-0"	5'-0"	#5 @ 12"	#5 @ 12"	1'-2"	#5 @ 12"			12"
LESS THAN 3'-0"	1'-6"	1'-8"	4'-0"	#5 @ 12"	#5 @ 12"	1'-0"	#5 @ 12"			12"

GENERAL NOTES

1. IF THIS SHEET IS NOT 24"X36" THEN IT IS A REDUCED PLOT. USE GRAPHIC SCALE ACCORDINGLY.
2. SEE SHEET C55864-S-0002 FOR GENERAL STRUCTURAL NOTES AND MATERIAL PROPERTIES.

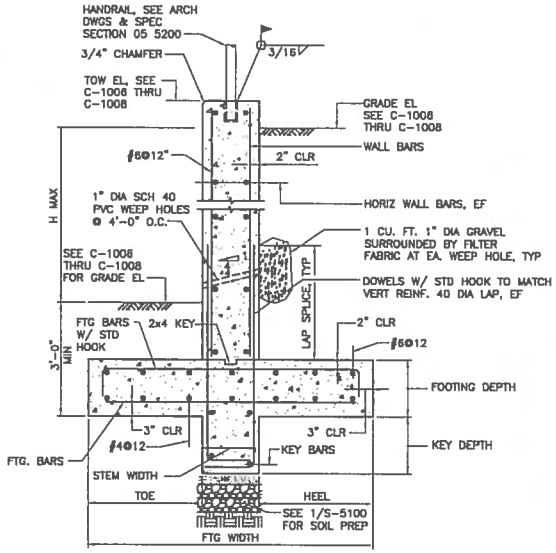

SECTION VIEW

TYPICAL SITE RETAINING WALL DETAIL

1 C-1004 1 C-1006 1 C-1007

1" = 1'-0"

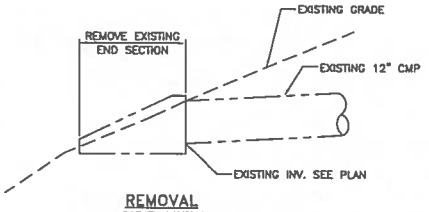

REMOVAL SIDE VIEW

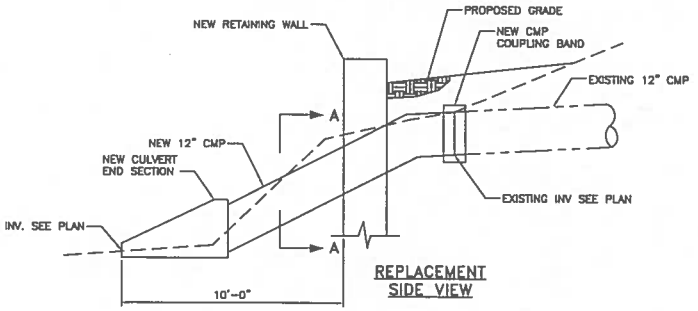

REPLACEMENT SIDE VIEW

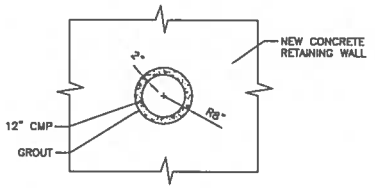

SECTION A-A

2 C-1004 2 C-1012 STORM DRAIN EXTENSION DETAIL

SCALE: NONE

NO	DATE	CLASS REV	ADC	DESCRIPTION	DWN	DES	CHKD	SUB	APP

AECOM

RLWTF-UP LOW LEVEL WASTE SUBPROJECT

MISCELLANEOUS DETAILS

DRAWN C. MORGAN

DESIGN C. MORGAN

CHECKED M. TARIN

DATE 5/8/14

BLDG. 230 TA-50

SUBMITTED MANNY TARIN

APPROVED FOR RELEASE ED ARTIGLIA

Los Alamos NATIONAL LABORATORY PO Box 1663 Los Alamos, New Mexico 87545

SHEET C-5005

60 OF 434

CLASSIFICATION REVISION DATE

PROJECT ID 100761

DRAWING NO C55864

REV 0

File Location: P:_TECHNOLOGY\92239831 - RLWTF\300 CAD\502 CAD DIRECTORY\VERDA\LLW FACILITY\S\SHEET\55864-C-5005-R0.DWG
Plotted By: BRADRHAM, DARLENE; Plot Date: Tuesday, May 06, 2014

121111

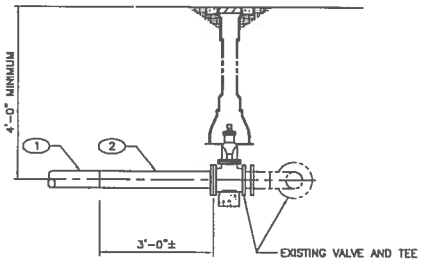

SECTION VIEW A-A

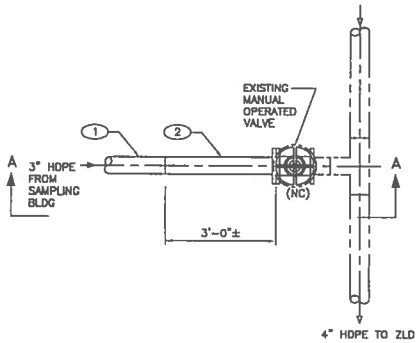

TOP VIEW

1 C-1015 EFFLUENT TRANSITION DETAIL
SCALE: NONE

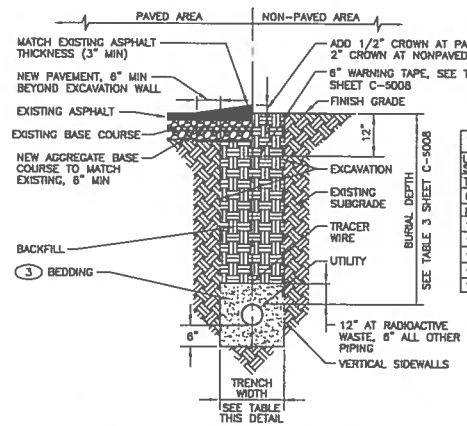

TRENCH WIDTH	
UTILITY SIZE	TRENCH WIDTH
TO 4"	24"
6"	30"
8"	32"
10"	34"
12"	36"
14"	38"
16"	40"
18"	42"

2 C-5006 SINGLE TRENCH DETAIL
SCALE: NONE

KEYED NOTES

1. SUBCONTRACTOR SHALL BRING NEW WORK TO WITHIN APPROXIMATELY 3 FEET OF TIE-IN POINT.
2. LANL U&I WILL MAKE FINAL TIE-IN USING REMAINING SUBCONTRACTOR SUPPLIED MATERIAL.
3. PROVIDE A MINIMUM OF 6" OF SAND BEDDING BETWEEN PIPE AND VERTICAL SIDEWALLS.

NO	DATE	CLASS REV	ADC	DESCRIPTION	DWN	DES	CHKD	SUB	APP

AECOM

RLWTF-UP LOW LEVEL WASTE SUBPROJECT

MISCELLANEOUS DETAILS

BLDG. 230 TA-50

DRAWN	C. MORGAN
DESIGN	C. MORGAN
CHECKED	M. TARIN
DATE	5/8/14

SUBMITTED MANNY TARIN

APPROVED FOR RELEASE ED ARTIOLIA

Los Alamos NATIONAL LABORATORY PO Box 1663 Los Alamos, New Mexico 87545

SHEET C-5006

61 OF 434

CLASSIFICATION | REVIEWER | DATE

PROJECT ID 100761 | DRAWING NO C55864 | REV 0

File Location: P:_TECHNOLOGY\60239831 - RLWTF\500 CAD\502 CAD DIRECTORY\AECOM\LLW FACILITY\C\SHEET\55864-C-5006-R0.DWG
Plotted By: BROERMAN, DARLENE; Plot Date: Tuesday, May 06, 2014

12112

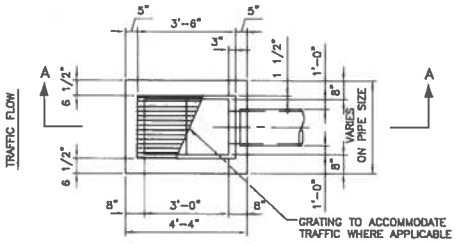

PLAN VIEW

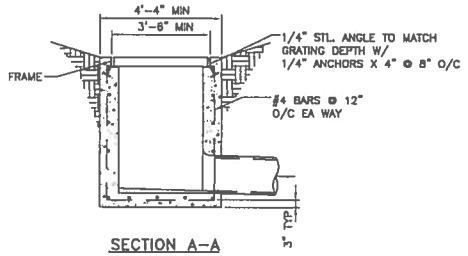

SECTION A-A

1 C-1004 / 1 C-1013 / 1 C-4001 DROP INLET DETAIL
SCALE: NONE

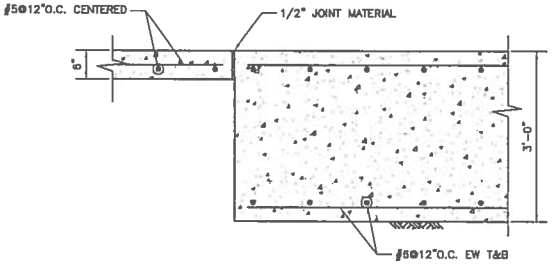

SECTION VIEW

3 C-4000 SLAB DETAIL
SCALE: 1"=1'-0"

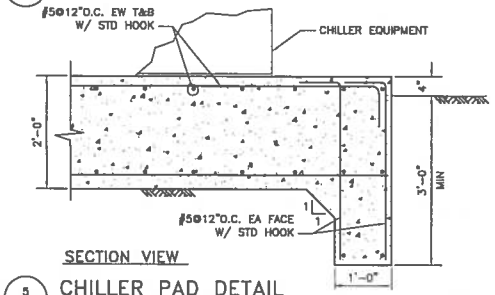

SECTION VIEW

5 C-4000 CHILLER PAD DETAIL
SCALE: 1"=1'-0"

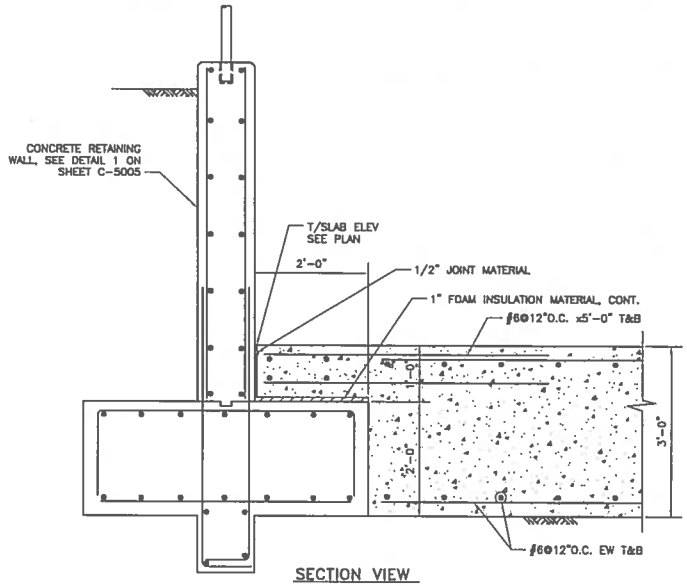

SECTION VIEW

2 C-4000 SLAB DETAIL
SCALE: 1"=1'-0"

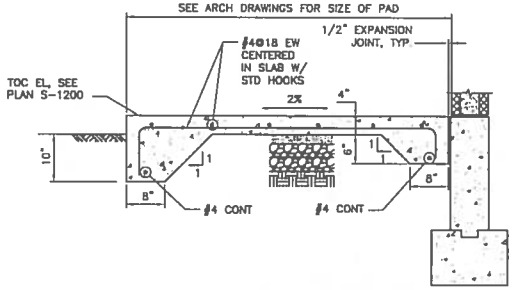

SECTION VIEW

4 C-4001 / 4 C-1003 STOOP DETAIL
SCALE: 1"=1'-0"

GENERAL NOTES

1. SUBCONTRACTOR SHALL SUBMIT PRE-CAST VAULT STRUCTURAL SHOP DRAWINGS AND DETAILS SIGNED BY A NEW MEXICO PROFESSIONAL ENGINEER FOR APPROVAL.
2. SEE SHEET C55864-S-0002 FOR GENERAL STRUCTURAL NOTES.

NO	DATE	CLASS REV	ADC	DESCRIPTION	DRN	DES	CHKD	SUB	APP

AECOM

RLWTF-UP LOW LEVEL WASTE SUBPROJECT

MISCELLANEOUS DETAILS

DRAWN	C. MORGAN
DESIGN	C. MORGAN
CHECKED	M. TARIN
DATE	5/8/14

BLDG. 230 TA-50

SUBMITTED MANNY TARIN

APPROVED FOR RELEASE ED ARTIGLIA

Los Alamos NATIONAL LABORATORY PO Box 1663 Los Alamos, New Mexico 87545

SHEET C-5007

62 OF 434

CLASSIFICATION REVIEWER DATE

PROJECT ID 100761

DRAWING NO C55864

REV 0

121213

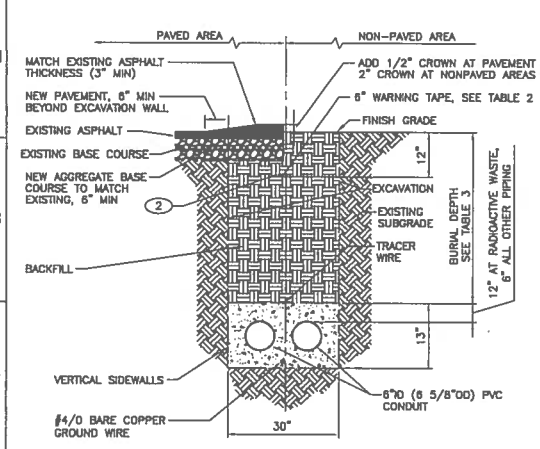

SECTION VIEW

1 E-1000 SINGLE TRENCH DETAIL

SCALE: NONE

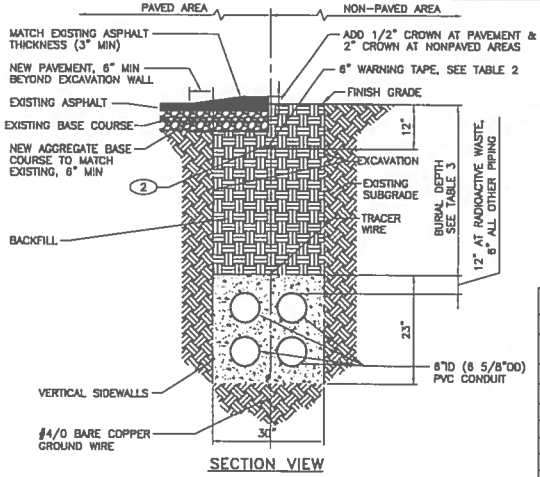

SECTION VIEW

2 E-1000 DOUBLE TRENCH DETAIL

SCALE: NONE

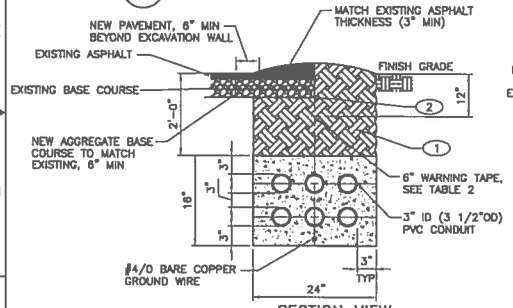

SECTION VIEW

3 E-1000 XFMR-A TO SWBD-A

SCALE: NONE

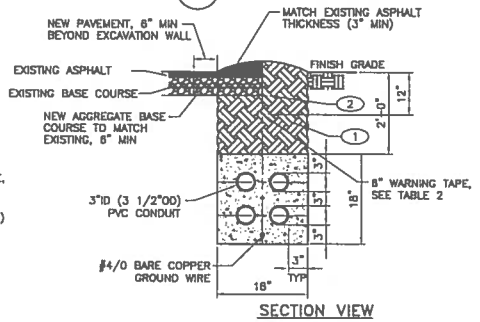

SECTION VIEW

4 E-1000 XFMR-B TO PP-C

SCALE: NONE

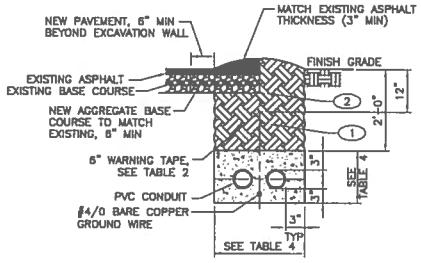

SECTION VIEW

5 E-1001 5 E-1000 TYPICAL 2 X 1 DUCT BANK

SCALE: NONE

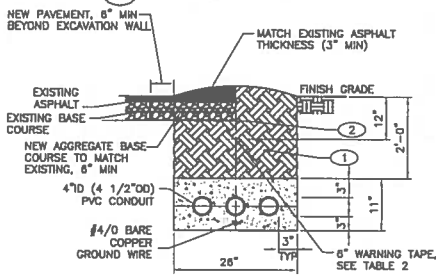

SECTION VIEW

EXISTING TELECOM MANHOLE TO LLW TREATMENT BUILDING

6 E-1000 SCALE: NONE

WARNING TAPE COLOR – TABLE 2	
TAPE	COLOR
ELECTRIC	RED
NATURAL GAS	YELLOW
COMMUNICATION	ORANGE
SEWER	GREEN
OIL, FUEL, RAD WASTE, ETC.	YELLOW
WATER	BLUE
STEAM/ CONDENSATE	YELLOW
EFFLUENT/ RECLAIMED WATER	PURPLE

GENERAL NOTES

1. SPACINGS SHOWN BETWEEN CONDUITS AND CONCRETE ENVELOPES ARE MINIMUM.

KEYED NOTES

(1) BACKFILL TRENCHES.

(2) PLACE ONE TRENCH MARKER FOR EVERY 2'-6" OR LESS OF TRENCH WIDTH, TYPICAL.

UNDERGROUND MINIMUM UTILITY LINE CLEARANCES[1] – TABLE 1

DIMENSIONS ARE IN INCHES AS MEASURED BETWEEN THE OUTSIDE SURFACES OF THE LINES AT THE CLOSEST POINT

	WATER	SANITARY SEWER	FORCE MAIN	STORM DRAIN	NATURAL GAS	TELECOMMUNICATIONS	RLW LINES	ELECTRICAL (13.2 kV)
VERTICAL CROSSINGS [1]								
WATER (POTABLE/FIRE PROTECTION)	12							
SANITARY SEWER	24	12						
FORCE MAIN	24	12	12					
STORM DRAIN	12	12	12	12				
NATURAL GAS	24[2]	24	24	24	24			
TELECOMMUNICATIONS	12	12	12	12	24	12		
RLW LINES	24	24	24	24	24	24	24	
ELECTRICAL (13.2 kV, 4160 V)	24	24	24	24	24	12	24	12[3]
PARALLEL LINES								
WATER (POTABLE/FIRE PROTECTION)	24	120	120	60	60	36	60	36
SANITARY SEWER (4" SERVICE)		24	36	24	60	36	60	36
FORCE MAIN			36	24	60	36	60	36
STORM DRAIN				24	60	36	60	36
NATURAL GAS					60	60	60	60
TELECOMMUNICATIONS						12	60	24
RLW LINES							24	60
ELECTRICAL (13.2 kV, 4160 V)								12[3]

NOTES:
1 NON-METALLIC PIPING SHALL HAVE A MINIMUM PARALLEL CLEARANCE DISTANCE OF 20 FEET FROM STEAM OR HOT WATER LINES; VERTICAL CROSSINGS OF STEAM OR HOT WATER LINES WITH NON-METALLIC PIPING ARE NOT PERMITTED.
2 SEWER BELOW WATER LINE, IF POSSIBLE.
3 ALTERNATE 3 INCHES IF CONCRETE ENCASED.

UTILITY BURIAL DEPTH – TABLE 3	
SERVICE	MIN DEPTH
COMMUNICATIONS/ELECTRICAL CONDUITS/DUCT BANKS (TOP)	24"
NATURAL GAS MAINS	36"
FUEL/NATURAL GAS SERVICE LINES	30"
PE FUEL/NATURAL GAS LINES UNDER ROADWAYS AND PARKING AREAS	60"
SEWER/RAD WASTE LINES	48"
STEAM/CONDENSTATE LINES	48"
WATER LINES	48"

DUCTBANK SIZING – TABLE 4			
CONDUIT ID	OD	WIDTH	DEPTH
2"	2 3/8"	15"	9"
3"	3 1/2"	18"	10"
4"	4 1/2"	24"	11"

NO	DATE	CLASS REV	ADC	DESCRIPTION	DWN	DES	CHKD	SUB	APP

AECOM

RLWTF-UP LOW LEVEL WASTE SUBPROJECT

UTILITY TRENCH DETAILS

BLDG. 230 TA-50

SUBMITTED MANNY TARIN

APPROVED FOR RELEASE ED ARTIOLIA

DRAWN	C. MORGAN	
DESIGN	C. MORGAN	
CHECKED	M. TARIN	
DATE	9/8/14	

Los Alamos NATIONAL LABORATORY PO Box 1663 Los Alamos, New Mexico 87545

SHEET C-5008

63 OF 434

CLASSIFICATION REVIEWER DATE

PROJECT ID 100761

DRAWING NO C55864

REV 0

Plotted By: BROEHMAN, DARLENE; Plot Date: Tuesday, May 06, 2014
File Location: P:_TECHNOLOGY\RD239531 - RLWTF\CAD CAD\CAD DIRECTORY\ACCOM\LLW FACILITY\C\SHEET\55864-C-5008-RD.DWG

121119

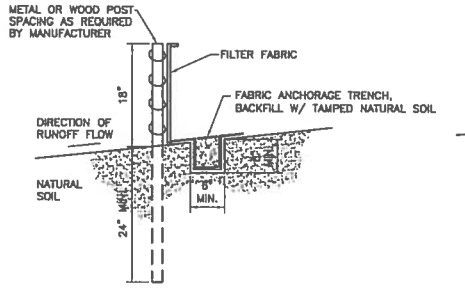

ELEVATION

1/C-1024 1/C-1025 SILT FENCE DETAIL
SCALE: NONE

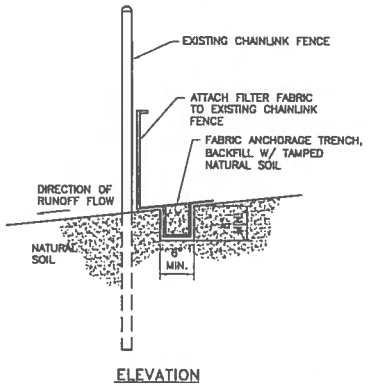

ELEVATION

2/C-1024 2/C-1025 SILT FENCE ATTACHED TO EXISTING CHAINLINK FENCE
SCALE: NONE

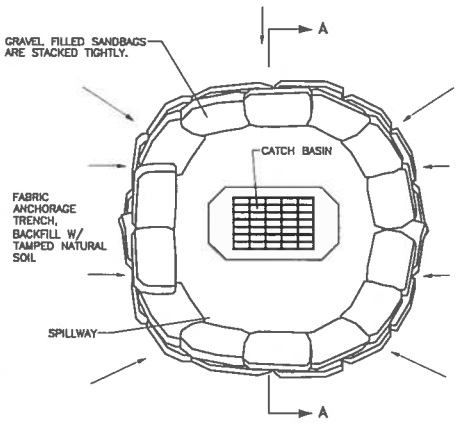

PLAN VIEW

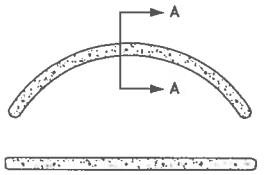

TOP VIEW

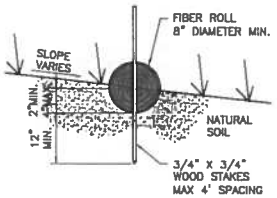

SECTION A-A

4/C-1024 4/C-1025 STRAW TUBE BARRIER DETAIL
SCALE: NONE

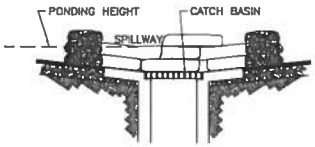

SECTION A-A

3/C-1024 3/C-1025 INLET SEDIMENT BARRIER DETAIL
SCALE: NONE

DUST AND EROSION CONTROL GENERAL NOTES

15. EXCEPT AS OTHERWISE AUTHORIZED IN WRITING, SUBCONTRACTOR SHALL GRADE, MULCH, CRIMP AND SEED ALL DISTURBED SOIL AREAS IN ACCORDANCE WITH THE PROJECT SPECIFICATIONS.
16. THE SUBCONTRACTOR AND LANL WILL INSPECT THE SITE EVERY TWO WEEKS AND AFTER ANY RAINFALL EVENT EXCEEDING ½ INCH. WRITTEN INSPECTION REPORTS SHALL BE KEPT ON FILE ON SITE. SUBCONTRACTOR SHALL INSPECT ALL STORM WATER CONTROL MEASURES IN PLACE AND MAKE MODIFICATIONS OF CONTROL MEASURES AS PROJECT PROGRESSES TO BEST UTILIZE POLLUTION CONTROL MEASURES.
17. INSPECTION FORMS WILL BE SIGNED AND DATED BY THE SUBCONTRACTOR AND LANL.

SOLID & HAZARDOUS WASTE CONTROLS

1. ONSITE CHEMICAL TOILETS SHALL BE PROVIDED BY THE SUBCONTRACTOR AND SHALL BE MAINTAINED BY THE SUBCONTRACTOR FOR THE DURATION OF THE PROJECT.
2. TRASH CONTAINERS SHALL BE PROVIDED BY THE SUBCONTRACTOR, LOCATED BY EMPLOYEE LUNCH AND PARKING SITES, AND USED BY THE SUBCONTRACTOR'S EMPLOYEES. CONTAINERS SHALL BE EMPTIED AS NECESSARY.
3. NO HAZARDOUS MATERIALS SHALL BE STORED ON THE PROJECT SITE. ANY FUEL STORED ONSITE SHALL BE ENCLOSED BY SPILL CONTAINMENT STRUCTURES.
4. ANY FUEL SPILLS SHALL BE IMMEDIATELY CONTAINED AND CLEANED UP BY THE SUBCONTRACTOR. A SPILL KIT SHALL BE LOCATED AT THE CONSTRUCTION OFFICE TRAILER LOCATION AND ALL OPERATORS SHALL BE TRAINED IN THE USE OF THE SPILL KIT. EMERGENCY PHONE NUMBERS OF THE SAFETY DIRECTOR SHALL ALSO BE POSTED IN THE CONSTRUCTION OFFICE TRAILER. CONTAMINATED SOIL SHALL BE DISPOSED OF IN A MANNER PRESCRIBED FOR THE SPILLED MATERIAL. SPILL EMERGENCIES SHALL BE REPORTED TO LANL.

DUST AND EROSION CONTROL GENERAL NOTES

1. EROSION AND SEDIMENT CONTROL MEASURES SHALL BE INSTALLED PRIOR TO ANY LAND DISTURBANCE.
2. SUBCONTRACTOR SHALL IMPLEMENT AND MAINTAIN EROSION CONTROL MEASURES TO MINIMIZE THE WATER BORNE EROSION OF SEDIMENT FROM THE PROJECT AREA. EROSION CONTROL MEASURES MAY INCLUDE BUT ARE NOT LIMITED TO GROUND COVERS, SOIL STABILIZERS, MULCH, RE-VEGETATION, CONTOUR GRADING, SWALES, BERMS, SEDIMENT PONDS, SEDIMENT/SILT FENCING, FILTER FABRICS AND/OR MATERIALS, AND STRAW BALES. EROSION CONTROL MEASURES SHALL BE IMPLEMENTED AS DETERMINED IN CONSULTATION WITH THE SUBCONTRACTOR AND LANL.
3. SUBCONTRACTOR SHALL IMPLEMENT AND MAINTAIN EROSION CONTROL MEASURES TO MINIMIZE WIND BORNE EROSION OF MATERIALS FROM THE PROJECT AREA. DUST CONTROL MEASURES MAY INCLUDE BUT ARE NOT LIMITED TO PRE WETTING, WATERING, MULCH, REVEGETATION, DRIFT/SILT FENCING, WOODEN LATH SNOW FENCING, GROUND COVERS, SOIL STABILIZERS, COMPACTION TO HARD SURFACE CRUST AND HALTING SOIL DISTURBANCE ACTIVITIES. DUST CONTROL MEASURES SHALL BE IMPLEMENTED AS DETERMINED IN CONSULTATION WITH THE SUBCONTRACTOR AND LANL.
4. ADDITIONAL DUST CONTROL AND/OR EROSION CONTROL MEASURES MAY BE REQUIRED DURING CONSTRUCTION DEPENDING ON UNFORESEEN CIRCUMSTANCES AND WEATHER CONDITIONS. ANY ADDITIONAL MEASURES SHALL BE IMPLEMENTED AS DETERMINED IN CONSULTATION WITH THE SUBCONTRACTOR AND LANL.
5. SUBCONTRACTOR SHALL MINIMIZE SOIL DISTURBANCE TO THE MAXIMUM EXTENT POSSIBLE. CLEAR AND GRUB WORK SHALL BE PERFORMED IN INCREMENTAL STEPS AS THE WORK PROGRESSES. REVEGETATION WORK SHALL ALSO BE PERFORMED IN INCREMENTAL STEPS AS THE WORK IS COMPLETED.
6. SUBCONTRACTOR SHALL MAKE ARRANGEMENTS FOR AND OBTAIN CONSTRUCTION WATER IN ACCORDANCE WITH THE POLICIES AND REQUIREMENTS OF LANL.
7. SUBCONTRACTOR SHALL PRE-WET THE WORK AREA PRIOR TO SOIL DISTURBANCE AND SHALL WATER THE SITE AS NECESSARY TO CONTROL DUST DURING CONSTRUCTION. SUBCONTRACTOR SHALL LEAVE THE SITE IN A WET-DOWN, STABLE CONDITION AT THE END OF EACH WORK DAY. A SUFFICIENT DUST CONTROL WATER SUPPLY AND DUST CONTROL EQUIPMENT SHALL BE MAINTAINED AT THE PROJECT SITE AT ALL TIMES.
8. TO MINIMIZE TRACKING OF SOIL AND GRAVEL ONTO PAVED STREETS, STABILIZED CONSTRUCTION ENTRANCES AND/OR A SUBCONTRACTOR OPERATED STREET SWEEPER SHALL BE USED TO CONTROL SOIL TRACKING.
9. IF SOIL OR WIND CONDITIONS ARE SUCH THAT DUST CANNOT BE CONFINED TO THE PROJECT SITE, SUBCONTRACTOR SHALL HALT SOIL DISTURBANCE ACTIVITIES UNTIL WINDS ABATE AND/OR DUST CAN BE EFFECTIVELY CONTROLLED.
10. ALL TRUCKS HAULING IMPORT, EXPORT OR ONSITE MATERIAL SHALL BE EQUIPPED WITH SOUND BEDS, SIDEBOARDS, TAILGATES AND COVERS MAINTAINED IN GOOD WORKING ORDER. COVERS SHALL BE USED AT ALL TIMES DURING HAULING OPERATIONS.
11. SUBCONTRACTOR SHALL PROMPTLY CLEAN UP ANY MATERIAL SPILLED, CARRIED, TRACKED OR ERODED ONTO ADJACENT PRIVATE PROPERTY OR PUBLIC RIGHT-OF-WAY. SUBCONTRACTOR SHALL BE RESPONSIBLE FOR THE CLEANUP AND REMOVAL OF WATER BORNE AND WIND BORNE MATERIAL WHICH ORIGINATES FROM THE WORK AREA AND IS ATTRIBUTABLE TO PROJECT CONSTRUCTION.
12. DRIFT/SILT FENCING SHALL BE ADP ENTERPRISES, INC. DURETHENE SNOW AND SAND CONTROL FENCING AWSF-4100-40, WOOD LATH SNOW FENCE OR APPROVED EQUAL INSTALLED AND MAINTAINED IN ACCORDANCE WITH MANUFACTURERS' RECOMMENDATIONS.
13. SEDIMENT/SILT FENCING SHALL BE AMOCO PROPEX SILT STOP, AMERICAN EXCELSIOR COMPANY SILT STOP, MIRAFI, INC. SILT FENCE OR APPROVED EQUAL INSTALLED AND MAINTAINED IN ACCORDANCE WITH MANUFACTURERS' RECOMMENDATIONS.
14. WHERE SOIL CONDITIONS PERMIT EFFECTIVE IMPLEMENTATION, SUBCONTRACTOR MAY COMPACT DISTURBED SOIL AREAS TO A HARD SURFACE FOR TEMPORARY DUST CONTROL.

NO	DATE	CLASS REV	ADC	DESCRIPTION	DWN	DES	CHKD	SUB	APP

AECOM

RLWTF-UP LOW LEVEL WASTE SUBPROJECT

EROSION CONTROL DETAILS

DRAWN C. MORGAN
DESIGN C. MORGAN
CHECKED M. TARIN
DATE 8/8/14

BLDG. 230 TA-50

SUBMITTED MANNY TARIN

APPROVED FOR RELEASE ED ARTIOLA

Los Alamos NATIONAL LABORATORY PO Box 1663 Los Alamos, New Mexico 87545

SHEET C-5009
64 OF 434

CLASSIFICATION REVIEWER DATE

PROJECT ID 100761
DRAWING NO C55864
REV 0

File Location: P:_TECHNOLOGY\60238651 - RLWTF\300 CAD\302 CAD DIRECTORY\VEGDA\LLW FACILITY\C\SHEET\55864-C-5009-ROLLING
Plotted By: BRODERMAN, DARLENE Plot Date: Tuesday, May 06, 2014

51215 : 1215

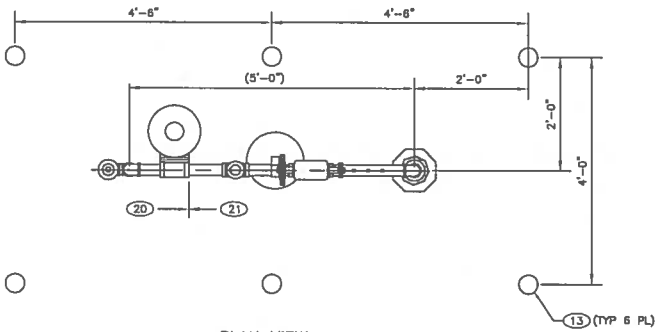

PLAN VIEW

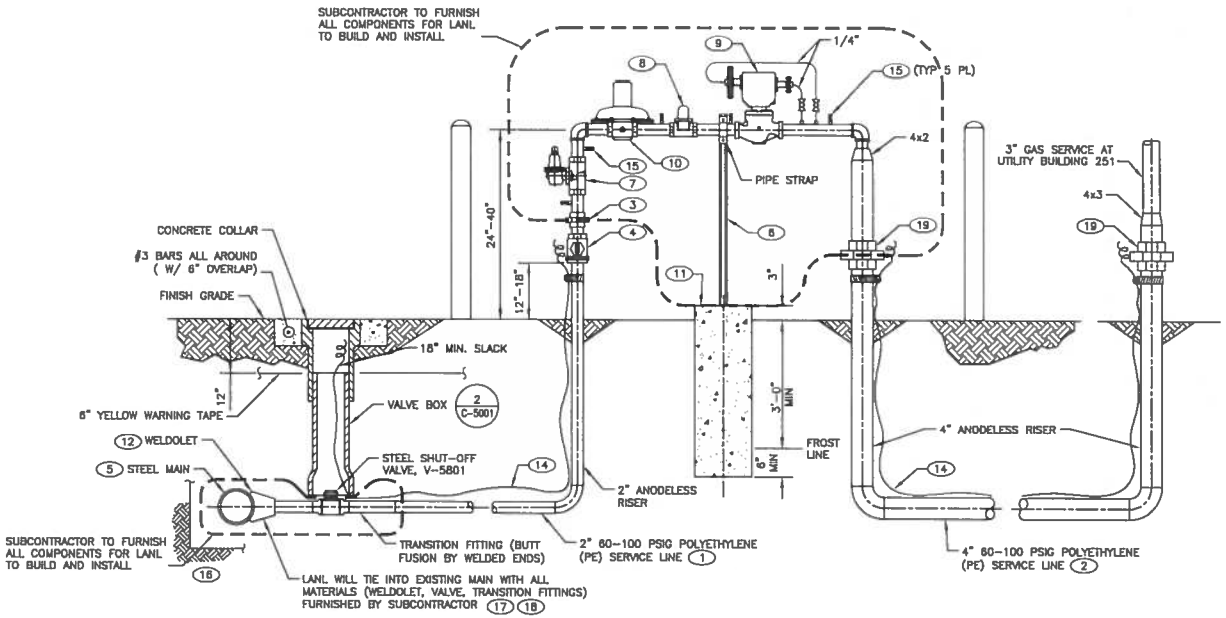

ELEVATION VIEW

1 C-1010 NATURAL GAS REGULATOR STATION DETAIL AND TIE-IN

SCALE: NONE

GENERAL NOTES

1. SEE DRAWING C55865, SHEETS P-7200 THROUGH P-7203 FOR PLUMBING EQUIPMENT LIST.
2. SEE DRAWING SHEETS P-0001, P-0002 AND P-0003 FOR GENERAL PLUMBING NOTES, LEGEND AND ABBREVIATIONS.
3. SEE PLUMBING DRAWING C55865, SHEET P-6200 FOR SEQUENCE OF OPERATIONS AND EQUIPMENT LIST COMPONENTS.

KEYED NOTES (CONT.)

19. 4" ISOLATION UNION.
20. PIPING PER ASME B31.8, 49 CFR 192, AND ESM SPEC 33 5100.
21. PIPING PER NFPA 54.

KEYED NOTES

1. RUN NEW SERVICE LINE TO WITHIN 6" OF EXISTING MAIN.
2. RUN NEW SERVICE LINE TO LLW UTILITY BUILDING 251.
3. 2" ISOLATION UNION
4. ISOLATION BALL VALVE, V-5801.
5. MAIN SERVICE LINE.
6. (1) B-LINE B22 STRUT GALVANIZED PIPE SUPPORT WITH PIPE STRAP.
7. PRESSURE REGULATOR, PCV-5805 PRV-5805, SET AT 20 PSIG.
8. SEISMIC SHUTOFF VALVE, V-5810.
9. OVER PRESSURE/UNDER PRESSURE SHUT OFF VALVE. SENSOR LINES TO BE CONNECTED DOWNSTREAM OF V-5808.
10. 2" PRESSURE REGULATOR, PCV-5808 PRV-5808, SET AT 14 IN. WC.
11. 12"ø CONCRETE PIPE SUPPORT.
12. WHEN TIE-IN PIPING IS EQUAL TO OR EXCEEDS 1/2 OF DIAMETER, MAKE TIE-IN WITH FULL CIRCLE WELD CLAMP OR BY CUTTING IN A TEE.
13. SEE DETAIL 4/C-5000 FOR BOLLARD DETAIL.
14. INSTALL CONTINUOUS (N SPLICING) INSULATED #10AWG THHN.THWN YELLOW SOLID COPPER TRACER WIRE 6" ABOVE PIPING WITH NO DIRECT CONTACT TO PIPING. EXTEND 12" MINIMUM ABOVE GRADE AND SECURE TO PIPING WITH HOSE CLAMP.
15. INSTALL 1/4" NPT PETE'S TEST PORTS WITH THREADOLETS WELDED TO PIPING AT LOCATIONS SHOWN.
16. MINIMUM BELL HOLE AT BOTTOM OF TRENCH: 24" FROM CENTERLINE OF NEW PIPE ON WATCH SIDE; 18" FROM EDGE ON BACK SIDE; 4'-0" IN FRONT OF MAIN (LENGTH OF BELL HOLE); 18" UNDER MAIN. TAPER OR STEP TRENCH TO MEET OSHA REQUIREMENTS.
17. LANL CONSTRUCTION INSPECTOR WILL ENSURE MATERIALS REQUIRED FOR TIE-IN ARE AT THE JOB SITE, SERVICE LINE HAS BEEN PRESSURE TESTED, AND BELL HOLE IS DUG PRIOR TO NOTIFYING SSS.
18. LANL CONSTRUCTION INSPECTOR WILL NOTIFY SSS 2 WEEKS IN ADVANCE TO SCHEDULE TIE-IN, TRACER WIRE CONTINUITY TESTING, AND UTILITY DOCUMENTATION.

NO	DATE	CLASS REV	ADC	DESCRIPTION	DWN	DES	CHKD	SUB	APP

AECOM

RLWTF-UP LOW LEVEL WASTE SUBPROJECT

NATURAL GAS REGULATOR STATION DETAILS

BLDG. 230 TA-50

DRAWN	C. MORGAN
DESIGN	C. MORGAN
CHECKED	M. TARIN
DATE	5/8/14

SUBMITTED MANNY TARIN

APPROVED FOR RELEASE ED ARTEAGA

Los Alamos NATIONAL LABORATORY PO Box 1663 Los Alamos, New Mexico 87545

SHEET C-5010

65 OF 434

CLASSIFICATION REVIEWER DATE

PROJECT ID 100761 DRAWING NO C55864 REV 0

MANUEL TARIN III NEW MEXICO 18741 PROFESSIONAL ENGINEER 5/1/14

12116

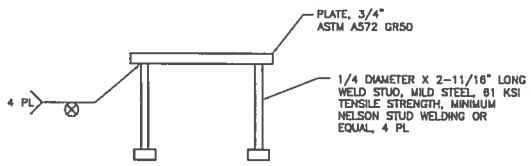

SIDE VIEW

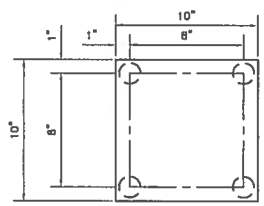

TOP VIEW

1 C-5012 EMBED PLATE WELDMENT DETAIL
SCALE: NONE

NOTES:

1. PLACE AT GRADE IN MAIN POUR.
2. WELD EQUIPMENT BASE TO WELD PLATE. USE E309 ELECTRODE FOR STAINLESS STEEL TO EMBED PLATE WELDING, E70 ELECTRODE FOR ALL OTHER STEEL TO STEEL CONDITIONS.

NO	DATE	CLASS REV	ADC	DESCRIPTION	DWN	DES	CHKD	SUB	APP

AECOM

RLWTF-UP LOW LEVEL WASTE SUBPROJECT

EMBEDMENT PLATE DETAILS

BLDG. 230 TA-50

DRAWN	C. MORGAN
DESIGN	C. MORGAN
CHECKED	M. TARIN
DATE	5/8/14

SUBMITTED: MANNY TARIN

APPROVED FOR RELEASE: ED ARTIGLIA

Los Alamos NATIONAL LABORATORY PO Box 1663 Los Alamos, New Mexico 87545

SHEET C-5011

66 OF 434

CLASSIFICATION | REVIEWER | DATE

PROJECT ID 100761 | DRAWING NO C55864 | REV 0

File Location: P:_TECHNOLOGY\602398831 - RLWTF\500 CAD\502 CAD DIRECTORY\AECOM\LLW FACILITY\C\SHEET\55864-C-5011-R0.DWG
Plotted By: TARIN, MANUEL; Plot Date: Monday, May 12, 2014

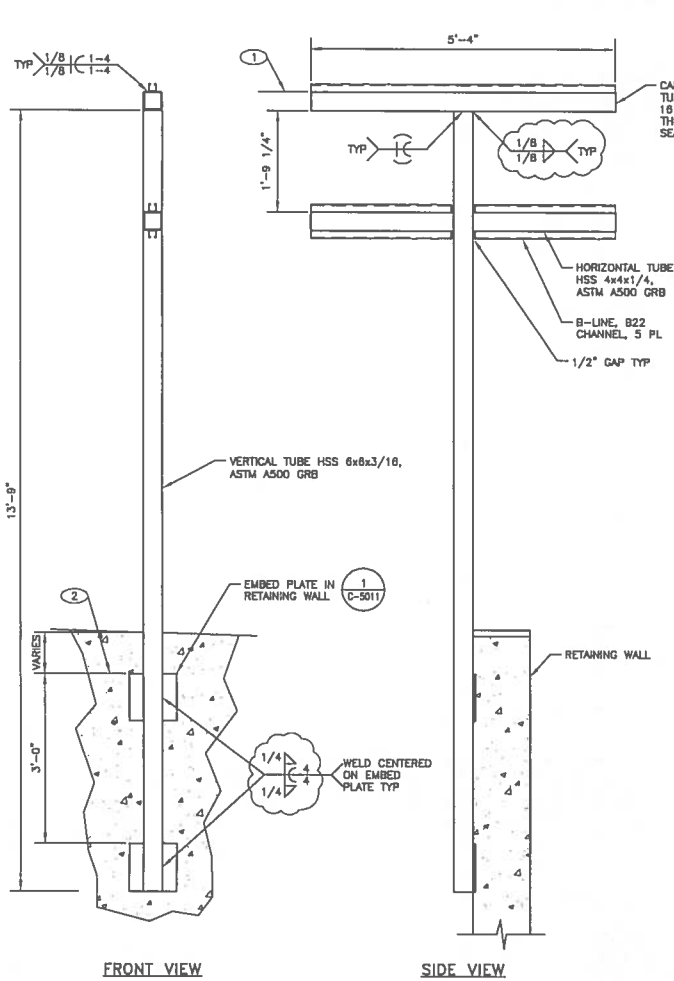

1 C-4000 PIPE RACK SUPPORT DETAIL
SCALE: NONE

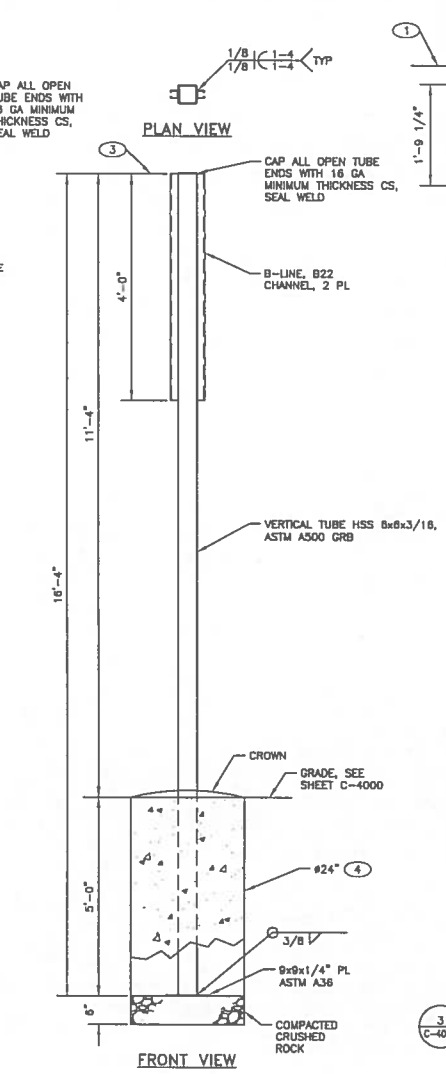

2 C-4000 PIPE RACK SUPPORT DETAIL
SCALE: NONE

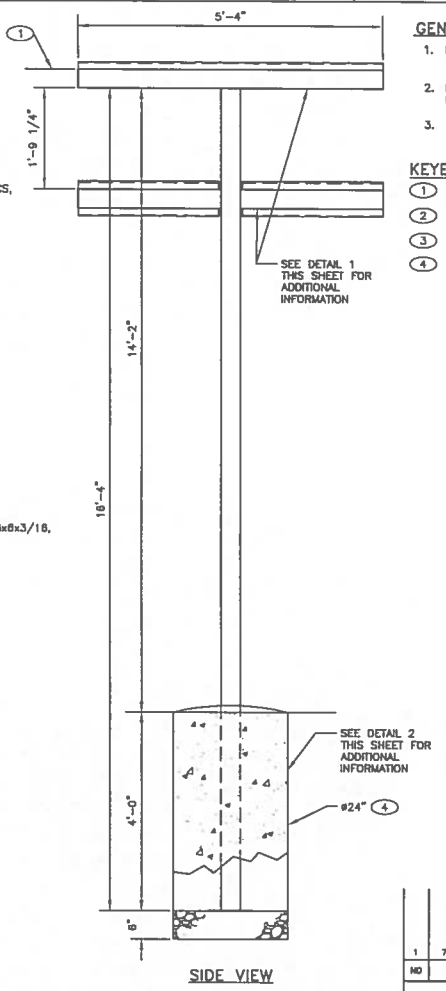

3 C-4000 PIPE RACK SUPPORT DETAIL
SCALE: NONE

GENERAL NOTES

1. ELEVATION REFERENCES LLW UTILITY BUILDING 251 F/F OF 100'-0". 7262.50 FEET ABOVE SEA LEVEL.
2. IF THIS SHEET IS NOT 24"x 36", THEN IT IS A REDUCED SIZE PLOT. USE GRAPHIC SCALE ACCORDINGLY.
3. SPACING OF PIPE SUPPORTS SHALL NOT EXCEED 10'-0".

KEYED NOTES

(1) TOP OF ALL HHS SUPPORTS IS 110'-8". SEE GENERAL NOTE 1.
(2) TOP OF ALL EMBED PLATES IS 100'-9". SEE GENERAL NOTE 1.
(3) TOP OF ALL HHS SUPPORTS IS 111'-0". SEE GENERAL NOTE 1.
(4) CONCRETE SHALL BE 4000 PSI PER STRUCTURAL SPEC SECTION 03 3001.

NO	DATE	CLASS REV	ADC	DESCRIPTION	DWN	DES	CHKD	SUB	APP
1	7/7/14	U		REVISED WELD SIZES	MT	CT	MT	MT	

AECOM

RLWTF-UP LOW LEVEL WASTE SUBPROJECT

PIPE RACK SUPPORT DETAILS

DRAWN	C. MORGAN
DESIGN	C. MORGAN
CHECKED	M. TARIN
DATE	5/8/14

BLDG. 230 TA-50

SUBMITTED: MANNY TARIN
APPROVED FOR RELEASE: ED ARTIOLA

Los Alamos NATIONAL LABORATORY PO Box 1663 Los Alamos, New Mexico 87545

SHEET C-5012
67 OF 434

CLASSIFICATION | REVIEWER | DATE

PROJECT ID 100761 | DRAWING NO C55864 | REV 1

MANUEL TARIN III NEW MEXICO 19741 PROFESSIONAL ENGINEER
7/7/2014

File Location: P:_TECHNOLOGY\60238631 - RLWTF\300 CAD\302 CAD DIRECTORY\AECOM\LLW FACILITY\C\SHEET\55864-C-5012-R1.DWG
Plotted By: GALLEGOS, ALAN Plot Date: Thursday, July 03, 2014

12118

COORDINATES				
NUMBER	ELEVATION	NORTHING	EASTING	DESCRIPTION
1	7265.00	1769097.62	1825908.92	LLW BLDG 230
2	7265.00	1769000.48	1825974.65	LLW BLDG 230
3	7258.00	1769143.23	1825971.48	NORTH-SOUTH RETAINING WALL
4	7259.00	1769094.40	1825968.89	NORTH-SOUTH RETAINING WALL
5	7265.00	1769142.87	1825978.15	NORTH-SOUTH RETAINING WALL
6	7263.00	1769248.03	1825984.57	NORTH-SOUTH RETAINING WALL
7	7262.50	1769249.43	1825957.48	NORTH-SOUTH RETAINING WALL
8	7266.50	1769144.62	1825944.85	NORTH-SOUTH RETAINING WALL
9	7265.00	1769106.78	1825942.89	NORTH-SOUTH RETAINING WALL
10	7262.50	1769201.77	1825977.79	CHILLER PAD
11	7262.50	1769212.24	1825978.33	CHILLER PAD
12	7262.79	1769179.78	1825938.34	CONC STOOP
13	7262.96	1769180.78	1825935.82	CONC STOOP
14	7262.50	1769203.72	1825940.07	CHILLER PAD
15	7262.50	1769214.19	1825940.61	CHILLER PAD
16	7262.50	1769230.89	1825950.92	EOP-PAD
17	7254.72	1769170.37	1826024.14	EOP-PAD
18	7254.12	1769213.84	1826000.19	EOP-PAD
19	7244.25	1768968.77	1826067.62	SS LIFT STA
20	7244.25	1768948.79	1826066.72	SS LIFT STA
21	7264.83	1769041.97	1825978.33	XFMR EOP PAD
22	7264.83	1769032.65	1825977.85	XFMR EOP PAD
23	7262.50	1769197.93	1825940.29	LLW UTIL BLDG
24	7262.50	1769184.44	1825974.60	LLW UTIL BLDG
25	7264.87	1769112.31	1825932.29	CONC STOOP
26	7264.99	1769107.33	1825932.64	CONC STOOP
27	7264.99	1769079.54	1825894.97	CONC STOOP
28	7264.87	1769079.80	1825899.97	CONC STOOP
29	7264.94	1769085.28	1825899.23	SIDEWALK
30	7264.87	1769047.94	1825898.34	SIDEWALK
31	7264.99	1769047.83	1825904.33	SIDEWALK
32	7264.87	1769034.55	1825885.62	SIDEWALK
33	7264.87	1769010.58	1825884.36	SIDEWALK
34	7264.99	1769004.24	1825902.08	SIDEWALK
35	7264.87	1768998.56	1825895.77	SIDEWALK
36	7264.87	1768998.25	1825940.39	SIDEWALK
37	7264.87	1769066.77	1825899.31	CURB-FL
38	7264.74	1769087.12	1825892.62	CURB-FL
39	7264.14	1769094.12	1825888.06	CURB-FL
40	7263.78	1769107.44	1825908.86	CURB-FL
41	7263.10	1769148.86	1825936.63	CURB-FL
42	7263.00	1769150.95	1825941.80	CURB-FL
43	7263.35	1769150.17	1825956.82	CURB-FL
44	7264.87	1768948.45	1825898.28	CURB-FL
45	7264.22	1768948.34	1825861.78	CURB-FL
46	7264.74	1768982.37	1825855.78	CURB-FL
47	7258.00	1768957.86	1825942.40	CURB-FL
48	7254.65	1768958.29	1825973.91	CURB-FL
49	7254.77	1768900.48	1825974.66	EOP PAD
50	7253.90	1768934.23	1825944.21	CURB-FL
51	7254.31	1768925.96	1825968.53	CURB-FL
52	7252.00	1768803.96	1825898.21	CURB-FL
53	7251.47	1768898.97	1825909.85	CURB-FL
54	7264.47	1768073.34	1825851.45	CURB-FL
55	7264.17	1769948.25	1825863.49	CURB-FL
75	7260.23	1769278.56	1825978.85	GUARDRAIL
76	7261.41	1769251.28	1825958.59	GUARDRAIL
77	7258.14	1769308.28	1826057.37	GUARDRAIL OPENING
78	7257.00	1769278.56	1826059.50	GUARDRAIL OPENING
79	7258.46	1769360.37	1826070.70	NORTH FENCE
80	7257.87	1769361.94	1826080.99	NORTH FENCE
81	7258.59	1769371.86	1826079.31	NORTH FENCE
82	7256.61	1769382.83	1826147.31	NORTH FENCE
83	7254.69	1769390.19	1826248.95	NORTH FENCE
84	7254.33	1769385.41	1826256.58	NORTH FENCE

COORDINATES				
NUMBER	ELEVATION	NORTHING	EASTING	DESCRIPTION
85	7256.58	1769273.89	1826084.01	WEST-EAST RETAINING WALL
86	7249.24	1769318.74	1826110.22	WEST-EAST RETAINING WALL
87	7250.41	1769309.46	1826193.03	WEST-EAST RETAINING WALL
88	7249.27	1769318.65	1826215.30	WEST-EAST RETAINING WALL
89	7249.68	1769318.52	1826240.56	WEST-EAST RETAINING WALL
90	7241.88	1769242.18	1826338.51	EAST FENCE
91	7240.67	1769243.47	1826358.10	EAST FENCE
92	7239.65	1769082.28	1826378.86	EAST FENCE
93	7242.50	1769220.41	1826344.83	STORM DRAIN INLET
94	7236.75	1769085.56	1826352.86	STORM DRAIN INLET
95	7265.00	1768988.80	1825932.75	TOW EFFL TANK
96	7265.00	1768950.97	1825951.27	TOW EFFL TANK
97	7254.84	1768886.50	1825974.02	EOP PAD/CURB FL
98	7254.80	1768889.24	1825956.71	EOP-PAD
100	7264.87	1769021.09	1825864.93	SIDEWALK
101	7265.29	1769023.35	1825841.44	SIDEWALK
102	7264.87	1769029.34	1825841.75	SIDEWALK
103	7264.87	1769027.06	1825865.24	SIDEWALK
104	7264.33	1769048.97	1825839.13	CURB-FL
105	7264.83	1769028.45	1825858.22	CURB-FL
106	7264.87	1769029.31	1825842.25	CURB-FL
107	7265.02	1769045.19	1825843.07	CURB-FL
108	7265.07	1769047.09	1825838.81	CURB-FL
109	7266.30	1769035.83	1825827.59	CURB-FL
110	7263.15	1769160.15	1825857.34	CURB-FL
111	7262.80	1769161.06	1825839.88	CURB-FL
112	7262.51	1769166.32	1825835.14	CURB-FL
113	7262.15	1769235.38	1825838.72	CURB-FL
114	7261.58	1769249.59	1825854.48	CURB-FL
115	7261.00	1769248.50	1825857.48	CURB-FL
116	7264.99	1768882.76	1825804.36	TOS EFFL SAMPLING
117	7264.99	1768870.78	1825803.76	TOS EFFL SAMPLING
118	7264.83	1769042.84	1825861.52	XFMR PAD APRON
119	7264.83	1769033.52	1825861.03	XFMR PAD APRON
120	7264.99	1768871.80	1825887.76	TOS EFFL SAMPLING
121	7256.50	1768987.19	1825973.46	TO RET-WALL
122	7258.50	1768001.22	1825965.33	TO RET-WALL
123	7263.50	1768987.99	1825957.98	TO RET-WALL
124	7239.65	1769084.58	1826385.68	EAST FENCE
125	7262.50	1769230.62	1825958.08	EOP-PAD
126	7262.50	1769231.30	1825942.84	EOP-APRON
127	7262.50	1769196.07	1825978.24	LLW UTIL BLDG
128	7265.00	1769107.76	1825923.72	LLW BLDG 230
129	7265.00	1769098.78	1825923.15	LLW BLDG 230
130	7265.00	1769088.83	1825908.50	LLW BLDG 230
131	7265.00	1769090.20	1825895.53	LLW BLDG 230
132	7265.00	1769071.22	1825894.54	LLW BLDG 230
133	7265.00	1769070.83	1825905.52	LLW BLDG 230
134	7265.00	1769027.83	1825903.29	LLW BLDG 230
135	7265.00	1769028.25	1825891.31	LLW BLDG 230
136	7265.00	1769018.28	1825890.75	LLW BLDG 230
137	7265.00	1769015.84	1825902.87	LLW BLDG 230
138	7265.00	1769004.24	1825902.08	LLW BLDG 230
139	7265.00	1769093.85	1825879.48	LLW BLDG 230
140	7265.00	1769085.78	1825942.12	LLW BLDG 230
141	7265.00	1768990.76	1825911.14	TOW EFFL TANK
142	7265.00	1768942.12	1825909.56	TOW EFFL TANK
143	7264.99	1768883.59	1825888.41	TOS EFFL SAMPLING
147	7264.99	1768981.56	1825886.30	CONC STOOP
148	7264.87	1768981.85	1825883.32	CONC STOOP
149	7264.50	1769018.41	1825868.12	STORM DRAIN INLET
150	7264.87	1768998.06	1825868.85	CONC STOOP

NO	DATE	CLASS REV	ADC	DESCRIPTION	DWN	DES	CHKD	SUB	APP

AECOM

RLWTF-UP LOW LEVEL WASTE SUBPROJECT

SITE COORDINATE TABLE

BLDG. 230 TA-50

DRAWN	C. MORGAN
DESIGN	C. MORGAN
CHECKED	M. TARIN
DATE	5/9/14

SUBMITTED MANNY TARIN

APPROVED FOR RELEASE ED ARTIOLIA

Los Alamos NATIONAL LABORATORY PO Box 1663 Los Alamos, New Mexico 87545

SHEET C-7000

68 OF 434

CLASSIFICATION REVIEWER DATE

PROJECT ID 100761

DRAWING NO C55864

REV 0

Plotted By: MORGAN, CHRIS; Plot Date: Thursday, May 15, 2014
File Location: C:\Revit\Cad\100761 - RLWTF\000 CAD\002 CAD DIRECTORY\ECOM\LLW FACILITY\CIVIL SITE\RLWTF-COORD.DWG

(ALL ABBREVIATIONS AND LEGENDS SHOWN ARE NOT NECESSARILY USED ON THE DRAWINGS)

ABBREVIATIONS

AFF	ABOVE FINISHED FLOOR
ADDL	ADDITIONAL
ADH	ADHESIVE
ADJ	ADJACENT
ALT	ALTERNATE
ALUM	ALUMINUM
ACI	AMERICAN CONCRETE INSTITUTE
AISC	AMERICAN INSTITUTE OF STEEL CONSTRUCTION
AISI	AMERICAN IRON AND STEEL INSTITUTE
ASTM	AMERICAN SOCIETY TESTING MATERIALS
AWS	AMERICAN WELDING SOCIETY
ANCH	ANCHOR
AB	ANCHOR BOLT
APPROX	APPROXIMATE
ARCH	ARCHITECT
ATR	ALL THREAD ROD
BAL	BALANCE
BM	BEAM
BRG	BEARING
BFF	BELOW FINISH FLOOR
BLK	BLOCK OR BLOCKING
BB	BOND BEAM
BOTT	BOTTOM
BO	BOTTOM OF
B/F	BOTTOM OF FOOTING
BLDG	BUILDING
CIP	CAST-IN-PLACE
CLG	CEILING
CTR	CENTER
CL	CENTERLINE
CLR	CLEAR
COL	COLUMN
CONC	CONCRETE
CMU	CONCRETE MASONRY UNIT
CONN	CONNECTION
CONST	CONSTRUCTION
CTRJ	CONSTRUCTION JOINT
CONT	CONTINUOUS
CJ	CONTROL JOINT
DL	DEAD LOAD
DP	DEEP
DEG, °	DEGREE
DET	DETAIL
DIAG	DIAGONAL
DIA, Ø	DIAMETER
DIFF	DIFFERENCE
DWLS	DOWELS
DWG	DRAWING
EA	EACH
EF	EACH FACE
EW	EACH WAY
EL	ELEVATION
ELEC	ELECTRICAL
EMBED	EMBEDMENT
ENGR	ENGINEER
EOD	EDGE OF DECK
EQUIP	EQUIPMENT
ESM	ENGINEERING STANDARDS MANUAL
EXST	EXISTING
EXP	EXPANSION
EJ	EXPANSION JOINT
EXT	EXTERIOR
FOC	FACE OF CONCRETE
FOF	FACE OF FINISH
FOS	FACE OF STUD
FS	FAR SIDE
FT	FEET
FV	FIELD VERIFY
FIN	FINISH
FF	FINISH FLOOR
FG	FINISH GRADE
FLG	FLANGE
FLR	FLOOR
FD	FLOOR DRAIN
FTG	FOOTING
FNDN	FOUNDATION
GA	GAGE
GALV	GALVANIZED
GWB	GYPSUM WALLBOARD
HAS	HEADED ANCHOR STUD
HK	HOOK
HP	HIGH POINT
HS	HIGH STRENGTH
HORIZ	HORIZONTAL
IBC	INTERNATIONAL BUILDING CODE
IN	INCH
ID	INSIDE DIAMETER
IF	INSIDE FACE
INSUL	INSULATION
INT	INTERIOR
JST	JOIST
KCJ	KEYED CONTROL JOINT
K	KIP (1000 LBS)
KIPS	KILOPOUNDS
KOBB	KNOCK OUT BOND BEAM
LANL	LOS ALAMOS NATIONAL LABORATORY

ABBREVIATIONS (CONTINUED)

LB	POUND
LBS	POUNDS
LFRS	LATERAL FORCE RESISTING SYSTEM
LG	LONG
LL	LIVE LOAD
LLBB	LONG LEG BACK TO BACK
LLV	LONG LEG VERTICAL
LLH	LONG LEG HORIZONTAL
LONG	LONGITUDINAL
LW	LIGHTWEIGHT
LLW	LOW LEVEL WASTE
MAINT	MAINTENANCE
MCJ	MASONRY CONTROL JOINT
MFR	MANUFACTURER
MK	MARK
MATL	MATERIAL
MAX	MAXIMUM
MSL	MEAN SEA LEVEL
MECH	MECHANICAL
MOM	MOMENT
MPH	MILES PER HOUR
MU	MECHANICAL UNIT
MIN	MINIMUM
MISC	MISCELLANEOUS
NS	NEAR SIDE
N-S	NORTH / SOUTH
NIC	NOT IN CONTRACT
NTS	NOT TO SCALE
NO	NUMBER
OC	ON CENTER
OD	OUTSIDE DIAMETER
OF	OUTSIDE FACE
OPNG	OPENING
OPP	OPPOSITE
OSHA	OCCUPATIONAL SAFETY AND HEALTH ADMINISTRATION
PART	PARTIAL
PCI	POUNDS PER CUBIC INCH
PERIM	PERIMETER
PERP	PERPENDICULAR
PL	PLATE
PT	POINT
PVC	POLYVINYL CHLORIDE
LBS	POUNDS
PLF	POUNDS PER LINEAR FOOT
PSF	POUNDS PER SQUARE FOOT
PSI	POUNDS PER SQUARE INCH
PROJ	PROJECTION
QTY	QUANTITY
RAD	RADIUS
REINF	REINFORCING
REQD	REQUIRED
REQMTS	REQUIREMENTS
R	RISER
RD	ROOF DRAIN
REV	REVISION
RO	ROUGH OPENING
SCHED	SCHEDULE
SDI	STEEL DECK INSTITUTE
SJI	STEEL JOIST INSTITUTE
SECT	SECTION
SHT	SHEET
SIM	SIMILAR
SPA	SPACES
SPECS	SPECIFICATIONS
SQ	SQUARE
SS	STAINLESS STEEL
STL	STEEL
STD	STANDARD
STIFF	STIFFENER
STRUCT	STRUCTURAL
SYM	SYMMETRICAL
TAN	TANGENT
THK	THICKNESS
THRU	THROUGH
T&B	TOP AND BOTTOM
TO	TOP OF
TOB	TOP OF BEAM
TOC	TOP OF CONCRETE
TOF	TOP OF FOOTING
TOGB	TOP OF GRADE BEAM
TOP	TOP OF PEDESTAL
TOS	TOP OF STEEL
TOW	TOP OF WALL
TRANS	TRANSVERSE
TYP	TYPICAL
UB	UTILITY BUILDING
UNO	UNLESS NOTED OTHERWISE
VERT	VERTICAL
WD	WIDE
WF	WIDE FLANGE
WT	WEIGHT
WWF	WELDED WIRE FABRIC
W/	WITH
W/O	WITHOUT
WP	WORK POINT

SECTION CUT SYMBOL, SHOWING DIRECTION OF VIEW

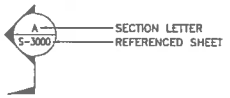

DETAIL CUT SYMBOL, SHOWING DIRECTION OF VIEW (NS)

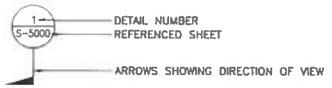

CALLOUT REFERENCE BUBBLE

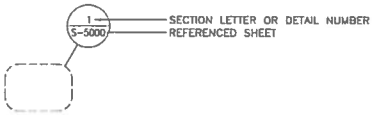

NO	DATE	CLASS REV	ADC	DESCRIPTION	DWN	DES	CHKD	SUB	APP

AECOM

RLWTF-UP LOW LEVEL WASTE SUBPROJECT

ABBREVIATIONS & LEGEND

DRAWN	G.FLORES
DESIGN	D.AXELROD
CHECKED	C.ROSENBERGER
DATE	05-06-14

BLDG. 230 TA-50

SUBMITTED MANNY TARIN — APPROVED FOR RELEASE ED ARTIGLIA

Los Alamos NATIONAL LABORATORY PO Box 1663 Los Alamos, New Mexico 87545

SHEET S-0001

69 OF 434

CLASSIFICATION | REVIEWER | DATE

PROJECT ID 100761 | DRAWING NO C55864 | REV 0

JAMES M. WEEKS NEW MEXICO 11364 REGISTERED PROFESSIONAL ENGINEER

5/14/14

12/9/2014 :

File: Locs/Work TA/50/E PROJECTS/LANL/LANL RLWTF LL-V\DRAFTING\MODEL\CAD2 II\VAR\N34664-S-0001.DWG
Plotted By: FLORES, GABRIEL Plot Date: Monday, May 12, 2014

(ALL GENERAL NOTES SHOWN ARE NOT NECESSARILY USED ON THE DRAWINGS)

GENERAL STRUCTURAL NOTES

1. CODES AND MANUALS:
   - A. INTERNATIONAL BUILDING CODE 2009.
   - B. AMERICAN SOCIETY OF CIVIL ENGINEERS, ASCE 7-05, MINIMUM DESIGN LOADS FOR BUILDINGS AND OTHER STRUCTURES.
   - C. ACI 318-08 BUILDING CODE REQUIREMENTS FOR REINFORCED CONCRETE.
   - D. AISC-360-05, MANUAL OF STEEL CONSTRUCTION.
   - E. DOE-STD-1020-2002 NATURAL PHENOMENA HAZARDS DESIGN AND EVALUATION CRITERIA FOR DOE FACILITIES.
   - F. ENGINEERING STANDARDS MANUAL ISD 341-2, CHAPTER 5, REV. 6, 6-20-2011
   - G. LANL DRAFTING MANUAL OST-220-03-01-DM REV. 4, 10-27-2006.
   - H. PCI MNL-116-99 MANUAL FOR QUALITY CONTROL FOR PLANT AND PRODUCTION OF STRUCTURAL PRECAST CONCRETE PRODUCTS.
   - I. PCI MNL-120-10 PCI DESIGN HANDBOOK: PRECAST AND PRESTRESSED CONCRETE, 7TH EDITION.
2. DESIGN LOADS:
   - A. NEW BUILDING CLASSIFICATION PER DOE-STD-1020: PC-1.
   - B. MINIMUM DESIGN LOADS:
     IN ACCORDANCE WITH LANL ESM, AS AUGMENTED BY ASCE-7, FOR DEAD AND LIVE LOADS, UNLESS NOTED OTHERWISE.
     - (a) DEAD LOADS:
       - (a1) SELFWEIGHT OF MATERIALS.
       - (a2) WEIGHT OF PERMANENT INSTALLED EQUIPMENT.
       - (a3) FUTURE FLOOR DESIGN DEAD LOAD: 10 PSF UNIFORM LOAD.
     - (b) LIVE LOADS:
       - (b1) ROOF DESIGN LIVE LOAD: 30 PSF UNIFORM LOAD OR 2000 LB. CONCENTRATED LOAD.
       - (b2) BUILDING 230 SLAB-ON-GRADE FLOOR DESIGN LIVE LOAD: 250 PSF UNIFORM LOAD OR 3000 LB. CONCENTRATED LOAD.
       - (b3) BUILDING 251 SLAB-ON-GRADE FLOOR DESIGN LIVE LOAD: 250 PSF UNIFORM LOAD OR 3000 LB. CONCENTRATED LOAD.
       - (b4) BUILDING 252 SLAB-ON-GRADE FLOOR DESIGN LIVE LOAD: 500 PSF UNIFORM LOAD OR 6000 LB CONCENTRATED LOAD OR 17,500 LB CAPACITY FORKLIFT.
       - (b5) BUILDING 261 SLAB-ON-GRADE FLOOR DESIGN LIVE LOAD: 250 PSF UNIFORM LOAD OR 3000 LB CONCENTRATED LOAD.
   - D. THE STRUCTURE HAS BEEN DESIGNED TO RESIST DESIGN LOADS ONLY AS A COMPLETED STRUCTURE. APPLICATIONS OF CONSTRUCTION LOADS TO THE PARTIALLY COMPLETED STRUCTURE SHALL BE CONSIDERED BY THE CONTRACTOR AND SO INCLUDED IN THE DESIGN OF SHORING, BRACING, FORMWORK, AND OTHER SUPPORTING ELEMENTS PROVIDED FOR CONSTRUCTION OF THE STRUCTURE. THE CONTRACTOR SHALL ENSURE THAT ALL CONSTRUCTION LOADS DO NOT EXCEED THE DESIGN LIVE LOADS INDICATED ON THE STRUCTURAL DRAWINGS AND THAT THESE LOADS ARE NOT IMPOSED ON THE STRUCTURAL MEMBERS PRIOR TO THE TIME THAT ALL FRAMING MEMBERS AND THEIR CONNECTIONS ARE IN PLACE.
   - E. WIND LOAD PARAMETERS:
     - (1) BASIC WIND SPEED: 90 MPH
     - (2) EXPOSURE: C
     - (3) WIND IMPORTANCE FACTOR I=1.0
     - (4) INTERNAL BUILDING PRESSURE COEFFICIENT: GC_{pi} =±0.18
   - F. SEISMIC LOAD PARAMETERS:
     - (1) PER LANL ESM REV 6
     - (2) OCCUPANCY CATEGORY II
     - (3) SEISMIC DESIGN CATEGORY: D
     - (4) SITE CLASS: D, STIFF SOIL
     - (5) DESIGN SPECTRAL RESPONSE ACCELERATION PARAMETERS: S_{DS}=0.75 S_{D1}=0.64
     - (6) IMPORTANCE FACTOR: I =1.0
     - (7) SEISMIC FORCE RESISTING SYSTEM:
       BUILDING 230-BEARING WALL SYSTEM CONSISTING OF SPECIAL REINFORCED CONCRETE SHEAR WALLS
       BUILDING 251-BEARING WALL SYSTEM CONSISTING OF SPECIAL REINFORCED MASONRY SHEAR WALLS
       BUILDING 261-BEARING WALL SYSTEM CONSISTING OF SPECIAL REINFORCED MASONRY SHEAR WALLS
     - (8) DESIGN BASE SHEAR: $V=C_s W$
       BUILDING 230: Cs=0.15, V=283K
       BUILDING 251: Cs=0.15, V=29.2 KIPS
       BUILDING 261: Cs=0.15, V=7.4 KIPS
     - (9) RESPONSE MODIFICATION COEFFICIENT R:
       BUILDING 230 = 5
       BUILDING 251 = 5
       BUILDING 261 = 5
     - (10) ANALYSIS PROCEDURE USED:
       BUILDING 230 - EQUIVALENT LATERAL FORCE
       BUILDING 251 - EQUIVALENT LATERAL FORCE
       BUILDING 261 - EQUIVALENT LATERAL FORCE
   - G. SNOW LOAD PARAMETERS:
     - (1) PER LANL ESM REV 6.
     - (2) GROUND SNOW LOAD: 16 PSF
     - (3) SNOW LOAD IMPORTANCE FACTOR: I=1.0
     - (4) SNOW EXPOSURE FACTOR: C_e=1.0
     - (5) THERMAL FACTOR: C_t=1.0
   - H. RAIN LOAD PARAMETERS:
     - (1) R=22.1PSF.
3. GEOTECHNICAL INFORMATION:
   - A. PER AMEC GEOTECHNICAL ENGINEERING STUDY, RLWTF, AMEC PROJECT #7-517-000018 2 AUGUST 2007. GEOTECHNICAL SUPPLEMENTAL CALCULATION 60239831-XCAL-001.
   - B. IBC SOIL CLASSIFICATION: 4 - SAND, SILTY SAND AND GRAVEL, CLAYEY SAND AND GRAVEL.
   - C. ALLOWABLE BEARING PRESSURE FOR:
     - (1) FOUNDATIONS, FOUNDED ON COMPACTED STRUCTURAL FILL: 4000 PSF
   - D. SUBGRADE MODULUS:
     - (1) FOUNDATIONS, FOUNDED ON COMPACTED STRUCTURAL FILL: 325 PCI
   - E. SPECIAL INSPECTION FOR SOILS PER TPLN-001.
   - F. SOIL COEFFICIENT OF FRICTION = 0.38
   - G. "AT REST" LATERAL SOIL PRESSURE (Po) = 50 PCF
   - H. PASSIVE SOIL PRESSURE = 330 PCF
4. UNIT MASONRY: (SEE SPECIFICATION SECTION 04 2220)
   - A. CONCRETE MASONRY UNITS NET AREA COMPRESSIVE STRENGTH - f'm = 1900 PSI
   - B. REINFORCING:
     - (a) REINFORCEMENT STEEL DEFORMED BARS: ASTM A615, GRADE 60.
     - (b) STIRRUPS AND TIES: ASTM A615, GRADE 60.
   - C. MORTAR TYPE S - COMPLY WITH ASTM C270.
   - D. GROUT - COMPLY WITH ASTM C476.
   - E. SPECIAL INSPECTION FOR MASONRY CONSTRUCTION PER TPLN-001.
   - F. SEE ACI 530-08 FOR STD HOOK, LAP SPLICE, AND DEVELOPMENT LENGTHS, WHERE NOT NOTED ON DRAWINGS. REFER TO SCHEDULE ON S-7200 AND S-7400 FOR MINIMUM LAP SPLICE AND DEVELOPEMENT LENGTHS.
5. CAST-IN-PLACE CONCRETE: (SEE SPECIFICATION SECTION 03 3001)
   - A. 28 DAY NORMAL WEIGHT CONCRETE COMPRESSIVE STRENGTH: 4000 PSI PER VAR-2012-066

GENERAL STRUCTURAL NOTES (CONT.)

   - B. REINFORCING:
     - (1) REINFORCEMENT STEEL DEFORMED BARS: ASTM A615, GRADE 60.
     - (2) REINFORCING STEEL RESISTING EARTHQUAKE INDUCED FLEXURAL AND AXIAL FORCES IN FRAME MEMBERS AND IN WALLS: ASTM A706, GRADE 60.
     - (3) STIRRUPS AND TIES: ASTM A615, GRADE 60.
   - C. SEE ACI 318-08 FOR STD HOOK, LAP SPLICE, AND DEVELOPMENT LENGTHS, WHERE NOT NOTED ON DRAWINGS. REFER TO SCHEDULE ON S-7100 (BLDG 230), S-7200 (BLDG 251) & S-7400 (BLDG 261) FOR MINIMUM LAP SPLICE AND DEVELOPMENT LENGTHS.
   - D. SPECIAL INSPECTION FOR CONCRETE CONSTRUCTION PER TPLN-001.
   - E. REINFORCING BARS SHALL HAVE THE FOLLOWING CONCRETE COVER, UNLESS NOTED OTHERWISE ON THE DRAWINGS:
     - (1) SURFACES PLACED IN CONTACT WITH THE EARTH . . . 3"
     - (2) FORMED SURFACE EXPOSED TO EARTH . . . 2"
     - (3) INSIDE FACE OF FORMED WALL . . . 1 1/2"
     - (4) COLUMN OR WALL PIER TIES . . . 1 1/2"
     - (5) SLAB BOTTOM REINFORCING STEEL . . . 3/4"
     - (6) TOP REINFORCING STEEL IN CIP FLAT SLABS . . . 2"
     - (7) SLAB ON METAL DECK . . . 3/4"
     - (8) BEAM STIRRUPS . . . 1 1/2"
     - (9) BEAM REINFORCING . . . 2"
     - (10) TOP REINFORCING STEEL OF MAT SLABS AT CHEMICAL TANK AND EFFLUENT TANK AREAS . . . 2"
   - F. DETAILING OF CONCRETE REINFORCEMENT AND ACCESSORIES SHALL MEET THE REQUIREMENTS OF ACI 315, ACI 318 AND CRSI MANUAL OF STANDARD PRACTICE PER SECTION 03 3001, REINFORCED CONCRETE SPECIFICATIONS.
   - G. THERE SHALL BE NO SEALING OF CONCRETE SLABS OR WALLS IN THE PROCESS AREA. SEE SPECIFICATION SECTIONS 03 3001 AND 09 9100 FOR FLOOR FINISH.
   - H. FREEZE-THAW EXPOSURE CATEGORY:
     F2 SEVERE, PER ACI 318-08 4.21.
   - I. MECHANICAL REBAR SPLICES SHALL BE MADE WITH LENTON FORM SAVERS BY ERICO (ER-IAPMO 0129).
6. STRUCTURAL PRECAST CONCRETE: (SEE SPECIFICATION SECTION 03 4100)
   - A. STRUCTURAL PRECAST ELEMENTS AND CONNECTIONS SHALL BE DESIGNED FOR THE SPAN AND LOADING CONDITIONS SHOWN ON THE DRAWINGS BY A QUALIFIED STRUCTURAL ENGINEER IN ACCORDANCE WITH ACI AND PCI.
   - B. ALL PRECAST SHALL BE DESIGNED BY AN ENGINEER REGISTERED IN THE STATE OF NEW MEXICO. THE ENGINEER SHALL SUBMIT SIGNED AND SEALED CERTIFICATION OF THE DESIGN.
   - C. PRESTRESSING STEEL SHALL CONFORM TO ASTM A416 WITH A MINIMUM TENSILE STRENGTH OF 270 KSI.
   - D. SUBMIT CALCULATIONS FOR PRECAST MEMBERS SHOWING A RATIONAL COMPLETE LOAD PATH, INCLUDING EFFECTS ON SUPPORTING MEMBERS. CALCULATIONS SHALL CLEARLY INDICATE ALL LOADS IMPOSED UPON THE SUPPORTING STRUCTURAL SYSTEM, INCLUDING ERECTION STRESSES.
   - E. SHOP DRAWING SUBMITTALS SHALL INDICATE CALCULATED CAMBER OF ALL PRECAST MEMBERS AT THE TIME OF ERECTION.
   - F. GROUT SHALL BE NON-SHRINK AND NON-METALLIC WITH A MINIMUM COMPRESSIVE STRENGTH OF 6,000 PSI.
   - G. SEE ARCHITECTURAL AND MEP DRAWINGS FOR EMBEDDED ELEMENTS, OPENINGS, INSERTS, PLATES, ANCHORS, CHAMFERS, REVEALS, REGLETS, FINISHES, ETC.
   - H. DO NOT FIELD CUT PRECAST WITHOUT APPROVAL.
   - I. PROVIDE MANUFACTURER'S STANDARD FLANGE SHEAR CONNECTORS AT 8'-0" O.C. MAXIMUM FOR PRECAST DOUBLE TEE MEMBERS.
   - J. PROVIDE TWO-COMPONENT, POLYURETHANE JOINT SEALANT WITH BACKER ROD BETWEEN FLANGES OF DOUBLE-TEE MEMBERS.
7. STRUCTURAL STEEL: (SEE SPECIFICATION SECTION 05 1000)
   - A. STRUCTURAL STEEL W-SHAPES: ASTM A992, GRADE 50.
   - B. MISCELLANEOUS STEEL SHAPES AND PLATES: ASTM A36.
   - C. HOLLOW STRUCTURAL SHAPES: ASTM A500 GRADE B.
   - D. STANDARD STEEL PIPE: ASTM A53, GRADE B.
   - E. HIGH STRENGTH BOLTS: ASTM A325 ("TURN OF THE NUT" METHOD).
   - F. NUTS: ASTM A563
   - G. HARDENED WASHERS: F436
   - H. COMMON BOLTS: ASTM A307, GRADE A
   - I. ANCHOR RODS: ASTM F1554, GRADE 36.
   - J. DRILLED IN ANCHORS: EXPANSION HILTI KB TZ, UNO. SPECIAL INSPECTION REQUIRED FOR PLACEMENT OF ALL HILTI KB TZ POST INSTALLED ANCHORS. ICC REPORT ESR-1917 ISSUED MAY 1, 2011. HILTI KWIK HUS-EZ (ESR-3027, ISSUED DECEMBER 1, 2013) SHALL BE USED FOR EQUIPMENT ANCHORAGE.
   - K. WELDS:
     - (1) ELECTRODE: USE 70,000 PSI ULTIMATE TENSILE STRENGTH MINIMUM. USE 75,000 PSI ULTIMATE TENSILE STRENGTH FOR E309 ELECTRODES.
     - (2) 3/16" MINIMUM FILLET WELDS TO APPLY UNLESS OTHERWISE NOTED.
   - L. HEADED ANCHOR STUD: ASTM A29, AWS D1.1-10 TYPE-A AND TYPE-B.
   - M. SPECIAL INSPECTION FOR STEEL CONSTRUCTION PER TPLN-001.
   - N. EPOXY DOWELS HILTI-HIT-RE 500-SD FOR ADHESIVE ANCHORS AND REBAR IN CRACKED AND UNCRACKED CONCRETE ICC REPORT ESR-2322, ISSUED FEBRUARY 1, 2012.
   - O. STRUCTURAL STEEL MEMBERS TO BE GALVANIZED AT THE FOLLOWING LOCATIONS:
     - (1) CHEMICAL TANK AREAS, (INCLUDING GRATING).
     - (2) TANK AREAS (INCLUDING GRATING, PUMP SKID SUPPORTS AND STAIRS).
     - (3) EXTERIOR CANOPIES.
     - (4) FACADE SUPPORT MEMBERS.
     - (5) GRATING FOR EXTERIOR STAIRS.
     - (6) MISCELLANEOUS STEEL FOR GUARDRAIL SUPPORT AND AROUND DOOR HEADERS AND JAMBS.

     SEE SPECIFICATIONS SECTIONS 05 1000 AND 09 9100 FOR FINISH OF STRUCTURAL STEEL AT ALL OTHER LOCATIONS.
8. STEEL JOIST: (SEE SPECIFICATION SECTION 05 2100)
   - A. OPEN WEB JOIST CONFORMING TO SJI K-SERIES JOISTS.
   - B. BOLTS: ASTM A325.
   - C. WELDS:
     - (1) ELECTRODE: USE 70,000 PSI ULTIMATE TENSILE STRENGTH MINIMUM.
     - (2) 3/16" MINIMUM FILLET WELDS TO APPLY UNLESS OTHERWISE NOTED.
   - D. SPECIAL INSPECTION REQUIREMENTS DESCRIBED UNDER SECTION 7 STRUCTURAL STEEL.
9. ROOF DECK: (SEE SPECIFICATIONS SECTION 05 3123)
   - A. STEEL ROOF (GALVANIZED) CONFORMING TO ASTM A653, GRADE 33.
   - B. DECK TYPE, PROFILE, AND SECTION PROPERTIES AS INDICATED ON PLANS.
   - C. CANOPY ROOF PANELS (GALVANIZED), SHALL CONFORM TO ASTM A653, GRADE 33.
10. LIGHT GAGE STEEL: (SEE SPECIFICATION SECTION 05 4000)
    - A. THE LIGHT GAGE STEEL DESIGN OF MEMBERS AND ALL CONNECTIONS TO MEET THE REFERENCED CODES, LIVE LOADS AND WIND LOADS LISTED IN "DESIGN LOADS" NOTES, AND DEAD LOADS AS IMPLIED FROM ARCHITECTURAL AND MECHANICAL DRAWINGS.
    - B. ALL MEMBERS SHALL BE FORMED FROM CORROSION-RESISTANT STEEL MEETING ASTM A1003, STRUCTURAL STEEL GRADE 50. SEE SPECIFICATION SECTION 05 4000 FOR COLD-FORMED METAL FRAMING.

GENERAL STRUCTURAL NOTES (CONT.)

   - C. ALL OF THE COLD FORMED MEMBERS SHALL COME FROM A SINGLE MANUFACTURER, "DIETRICH" OR EQUAL. THE INSTALLATION SHALL COMPLY WITH THE MANUFACTURER'S RECOMMENDATIONS.
   - D. BASE TRACKS SHALL BE SET ON SMOOTH AND LEVEL CONCRETE.
   - E. PRIOR TO FABRICATION OF FRAMING, THE CONTRACTOR SHALL SUBMIT FABRICATION AND ERECTION DRAWINGS TO THE ENGINEER FOR APPROVAL. SAID DRAWINGS SHALL BE SIGNED AND SEALED BY A STRUCTURAL ENGINEER REGISTERED IN THE STATE OF NEW MEXICO.
   - F. ALL CONNECTIONS SHALL BE WELDED CONNECTIONS AND SHALL BE PERFORMED IN ACCORDANCE WITH THE LATEST EDITION OF THE AWS D1.3 SPECIFICATION FOR WELDING SHEET STEEL IN STRUCTURES. ALL WELDING SHALL BE PERFORMED BY AWS CERTIFIED WELDERS. ALL WELDS SHALL BE CLEANED AND COATED WITH RUST INHIBITIVE ZINC PAINT.
   - G. EXPANSION ANCHORS - PROVIDE MINIMUM 1/2" DIAMETER KWIK BOLT TZ EXPANSION ANCHORS (ESR-1917, ISSUED MAY 1, 2011) BY HILTI OR EQUAL, WITH A MINIMUM 3 1/4" EMBEDMENT INTO CONCRETE. MINIMUM SPACING BETWEEN ADJACENT EXPANSION ANCHORS TO BE 5". EXPANSION ANCHORS SHALL BE LOCATED A MINIMUM OF 3" FROM CONCRETE EDGES. USE OVERSIZE WASHERS FOR ATTACHING COLD-FORMED MEMBERS WITH EXPANSION ANCHORS. INSTALL PER THE MANUFACTURER'S SPECIFICATIONS FOR COLD-FORMED CONNECTIONS TO CONCRETE.
   - H. SPLICES IN FRAMING COMPONENTS OTHER THAN TOP AND BOTTOM TRACKS ARE NOT PERMITTED.
   - I. STUDS SHALL BE INSTALLED SO THE ENDS ARE POSITIONED AGAINST THE INSIDE OF THE RUNNER TRACK WEB PRIOR TO FASTENING AND SHALL BE WELDED TO BOTH FLANGES OF THE UPPER AND LOWER RUNNER TRACKS.
   - J. FRAMING OF WALL OPENINGS SHALL INCLUDE HEADERS AND SUPPORTING STUDS AS SHOWN IN DETAILS.
   - K. ADDITIONAL STUDS SHALL BE INSTALLED IN THE WALLS TO RESIST THE VERTICAL COMPONENTS OF BRACING LOADS.
   - L. THE ALLOWABLE DEFLECTIONS (IN.) FOR VERTICAL WALLS SHALL BE HEIGHT (IN.) DIVIDED BY 400. THE ALLOWABLE VERTICAL DEFLECTIONS (IN.) FOR HORIZONTAL FRAMING SHALL BE SPAN (IN.) DMIDEDBY 480 FOR LIVE LOADS AND SPAN (IN.) DMIDED BY 360 FOR TOTAL LOADS.
   - M. THE MINIMUM YIELD STRENGTH OF THE COLD-FORMED FRAMING COMPONENTS SHALL BE AS FOLLOWS:
     - (1) 16 GAGE (54 MILS) OR HEAVIER - MINIMUM 50,000 PSI
     - (2) ALL TRACKS & ACCESSORIES - MINIMUM 50,000 PSI UNLESS NOTED OTHERWISE
   - N. THE COLD-FORMED FRAMING SHALL BE DESIGNED IN ACCORDANCE WITH THE FOLLOWING CODES, STANDARDS AND SPECIFICATIONS:
     - (1) IBC 2009
     - (2) ANSI/ASCE 7-05
     - (3) AISI "SPECIFICATIONS FOR DESIGN OF COLD-FORMED STEEL STRUCTURAL MEMBERS"-2007
     - (4) AISI "STANDARD FOR COLD-FORMED STEEL FRAMING: GENERAL PROVISIONS"-2007
     - (5) AISI "STANDARD FOR COLD-FORMED STEEL FRAMING: WALL STUD DESIGN"-2007
     - (6) AISI "STANDARD FOR COLD-FORMED STEEL FRAMING: HEADER DESIGN"-2007
     - (7) AISI "STANDARD FOR COLD-FORMED STEEL FRAMING: LATERAL DESIGN"-2007
     - (8) AISI "STANDARD FOR COLD-FORMED STEEL FRAMING: TRUSS DESIGN"-2007
     - (9) AISI "CODE OF STANDARD PRACTICE FOR STRUCTURAL COLD-FORMED STEEL FRAMING"-2007
   - O. ALL MEMBERS SHALL BE CUT SQUARELY FOR ATTACHMENT TO PERPENDICULAR MEMBERS OR SLOPE CUT AS REQUIRED FOR AN ANGULAR FIT AGAINST ABUTTING MEMBERS.
   - P. FIELD CUTTING OF COLD-FORMED MEMBERS SHALL BE DONE BY SAWING OR SHEARING. TORCH CUTTING OF COLD-FORMED MEMBERS IS NOT PERMITTED.
   - Q. ADDITIONAL TEMPORARY BRACING AND SHORING SHALL BE PROVIDED AS REQUIRED TO STABILIZE THE FRAMING AND TO SUPPORT CONSTRUCTION LOADS. TEMPORARY BRACING SHALL REMAIN IN PLACE UNTIL PERMANENT BRACING IS INSTALLED AND/OR ADDITIONAL CONSTRUCTION LOADS ARE REMOVED.
   - R. THESE DRAWINGS ARE INTENDED TO INDICATE THE MEMBER SIZES AND SPACINGS REQUIRED. LIGHT GAGE STEEL SUBCONTRACTOR MAY OFFER SUBSTITUTIONS PROVIDED THAT THE SUBSTITUTIONS CAN SUPPORT THE DESIGN LOADS AND ARE COORDINATED WITH THE PROJECT ARCHITECT AND STRUCTURAL ENGINEER.
   - S. SHEATHING ON THE COLD-FORMED FRAMING SHALL BE INSTALLED AS INDICATED IN THE ARCHITECTURAL DRAWINGS.
   - T. ALL CONSTRUCTION SHALL BE IN ACCORDANCE WITH OSHA STANDARDS.
11. GENERAL CONSTRUCTION:
    - A. EXECUTE ALL ACTIVITIES IN ACCORDANCE WITH THE CONSTRUCTION SPECIFICATIONS INCLUDED AS PART OF THIS DESIGN PACKAGE.
12. SPECIAL INSPECTION:
    - A. REQUIREMENTS ARE DESCRIBED IN THE "TESTS & SPECIAL INSPECTION PLAN", TPLN-001.

NO	DATE	CLASS REV	ADC	DESCRIPTION	DWN	DES	CHKD	SUB	APP

AECOM

RLWTF-UP LOW LEVEL WASTE SUBPROJECT

GENERAL STRUCTURAL NOTES

DRAWN	G.FLORES
DESIGN	D.MCELROD
CHECKED	C.ROSEBERRY
DATE	05-06-14

BLDG. 230 TA-50

SUBMITTED: MANNY TAREN

APPROVED FOR RELEASE: ED ARTIOLA

Los Alamos NATIONAL LABORATORY — PO Box 1663, Los Alamos, New Mexico 87545

SHEET S-0002

70 OF 434

CLASSIFICATION | REVIEWER | DATE

PROJECT ID 100761 | DRAWING NO C55864 | REV 0

JAMES M. WELCH NEW MEXICO 11984 REGISTERED PROFESSIONAL ENGINEER

5/12/14

File: L:\ADE PROJECTS\LANL\LANL RLWTF LL\V\DRAFTING\MODEL\CAD2 11\VANN\54644-S-0002.DWG
Plotted By: FLORES, GABRIEL Plot Date: Monday, May 12, 2014

12121

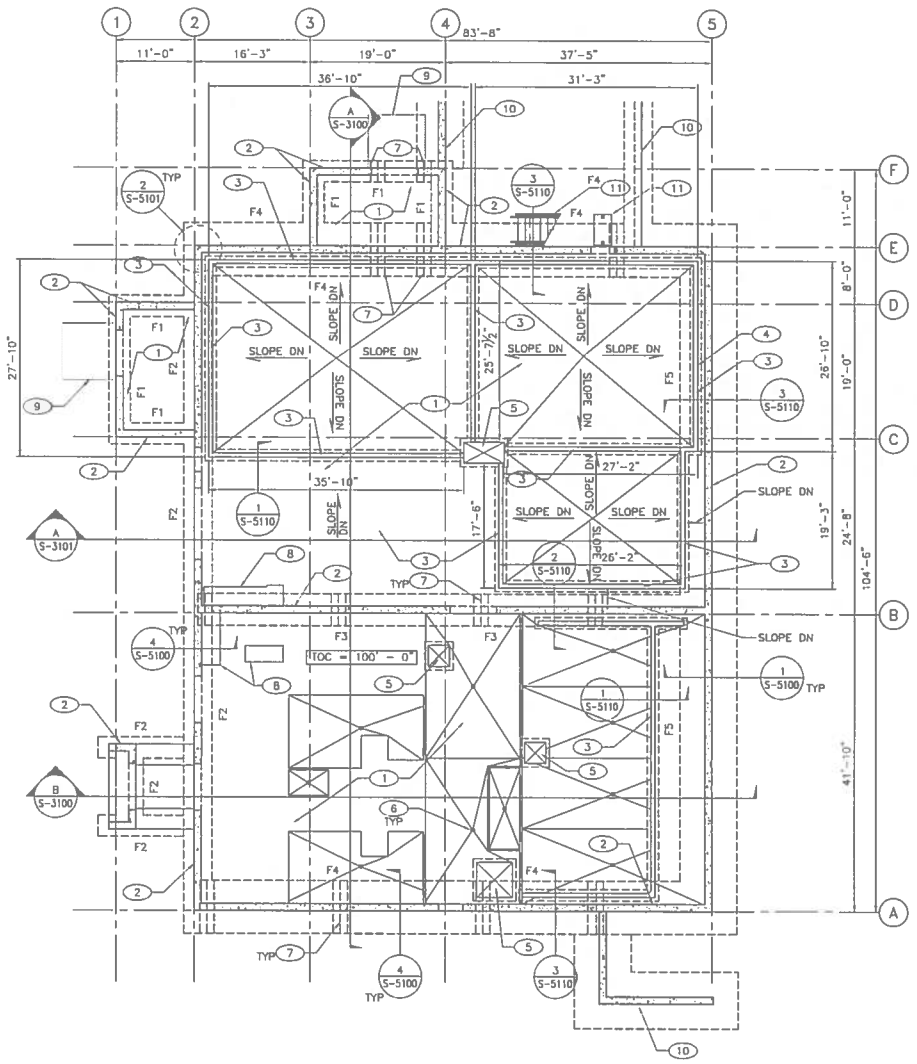

FOUNDATION PLAN

1/8"=1'-0"

KEYED NOTES

1. 7" CONCRETE SLAB ON GRADE WITH #5 @ 18" O.C. EACH WAY. (LFRS ELEMENT, DO NOT SAWCUT)
2. 12" CONCRETE WALLS W/ #6 @ 12" O.C EACH FACE VERTICAL AND #4 @ 12" O.C. EACH FACE HORIZONTAL. (LFRS ELEMENT)
3. TRENCH DRAIN, SEE PLUMBING PLAN P-1106.
4. TOC = 100'-0" AT EDGE OF TRENCH, TYP.
5. SUMP, SEE PLUMBING PLANS P-1106 & P-1107.
6. FLOOR DRAIN, SEE PLUMBING PLAN P-1106 & P-1107, TYP
7. STEPPED WALL FOUNDATION, SEE S-2100, S-2101 AND S-3100 FOR ELEVATIONS AND LOCATIONS. SEE 1/S-5101 FOR DETAIL.
8. HOUSEKEEPING PAD, SEE DETAIL 3/S-5100 FOR REINFORCING. HOUSEKEEPING PAD AND EQUIPMENT REQUIREMENTS TO BE FINALIZED WITH ELECTRICAL ENGINEER AND EQUIPMENT MANUFACTURER.
9. CONCRETE DOOR STOOPS, SEE CIVIL C-5007.
10. CONCRETE RETAINING WALLS, SEE CIVIL DRAWINGS.
11. STEEL STAIRS, SEE SHEET S-4100.

GENERAL NOTES

1. ABBREVIATIONS & LEGEND ARE LOCATED ON SHEET S-0001. GENERAL STRUCTURAL NOTES ARE LOCATED ON SHEET S-0002. STRUCTURAL SCHEDULES ARE LOCATED ON SHEET S-7100.
2. FINISH FLOOR REFERENCE ELEVATION IS 100'-0" = 7265.00'.
3. IF THIS SHEET IS NOT 24"X36", THEN IT IS A REDUCED SIZE PLOT. USE GRAPHIC SCALE ACCORDINGLY.
4. SEE 1/S-5100 FOR OVEREXCAVATION DETAIL.
5. SEE ELECTRICAL SHEET E-1105 FOR CONCRETE ENCASED MAIN GROUNDING ELECTRODE REQUIREMENTS.
6. SEE S-2100, S-2101 & S-3100 FOR FOOTING ELEVATIONS.
7. F# DESIGNATES FOOTING SIZE, SEE FOUNDATION SCHEDULE ON SHEET S-7100.
8. WALL CONSTRUCTION JOINTS TO BE 50'-0" MAX, SEE 3/S-5101.
9. NO SAW CUTTING OF THE SLAB IS PERMITTED.
10. SEE SCHEDULE ON S-7201 AND S-7202 FOR PENETRATIONS.
11. REFER TO Q-1102 & Q-1103 FOR CAST-IN-PLACE EMBEDMENT LOCATION AND DETAILS.
12. TRENCH DRAIN SHALL BE CAST IN USING AN APPROVED COMMERCIALLY AVAILABLE TRENCH DRAIN SYSTEM INSTALLATION PER MANUFACTURERS INSTRUCTIONS.
13. TRENCH DRAIN SHALL HAVE A CONTINUOUS MINIMUM SLOPE FROM TRENCH DRAIN HIGH POINT TO SUMP OF NOT LESS THAN 0.6%.
14. TRENCH SHALL HAVE A MINIMUM OPEN CHANNEL FLOW WIDTH IF 4".
15. TRENCH FREE FLOW DEPTH AT TRENCH HIGH POINTS SHALL BE 6.96" MIN.
16. COMMERCIAL TRENCH DRAIN SYSTEM SHALL BE FIBER REINFORCED VINYLESTER.
17. TRENCH DRAINS SHALL INTERFACE WITH AND DRAIN TO THE MAIN SUMP.
18. TRENCH DRAINS AND SUMP SHALL HAVE REMOVABLE GRATING RATED AS LOAD CLASS 'E'. GRATING SHALL BE FLUSH WITH ADJACENT FLOOR WHEN IN PLACE.

NO	DATE	CLASS REV	ADC	DESCRIPTION	DWN	DES	CHKD	SUB	APP

AECOM

RLWTF-UP LOW LEVEL WASTE SUBPROJECT

FOUNDATION PLAN

BLDG. 230 TA-50

DRAWN	G.FLORES
DESIGN	D.AXELROD
CHECKED	C.ROSENBERGER
DATE	05-08-14

SUBMITTED: MANNY TARIN

APPROVED FOR RELEASE: ED ARTIGLIA

Los Alamos NATIONAL LABORATORY PO Box 1663 Los Alamos, New Mexico 87545

SHEET S-1100

71 OF 434

CLASSIFICATION | REVIEWER | DATE

PROJECT ID 100761 | DRAWING NO C55864 | REV 0

JAMES M. WEEKS NEW MEXICO 11384 REGISTERED PROFESSIONAL ENGINEER

James M. Weeks 5/12/14

File Location: Y:\DOE PROJECTS\LANL\LANL RLWTF LLW\DRAFTING\MODEL\CADD II\MAIN\55864-S-1100.DWG
Plotted By: FLORES, GABRIEL; Plot Date: Monday, May 12, 2014

22121

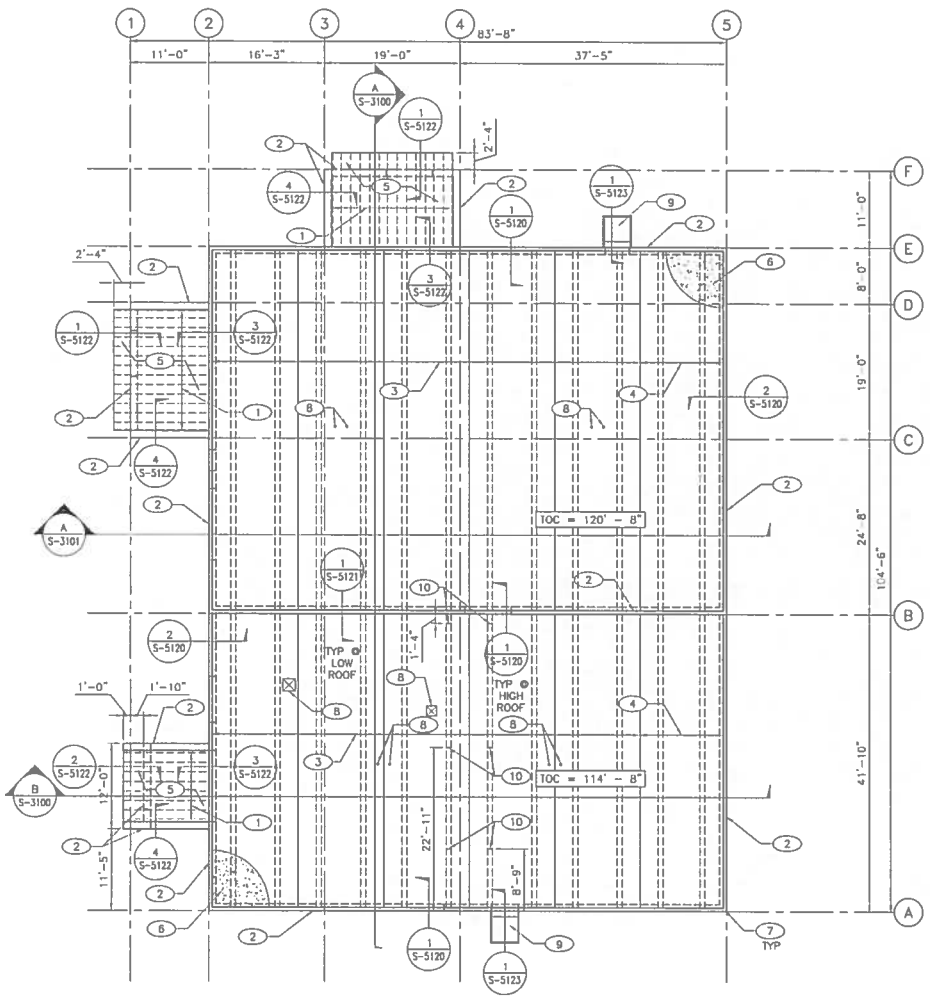

ROOF FRAMING PLAN

1/8"=1'-0"

GENERAL NOTES

1. ABBREVIATIONS & LEGEND ARE LOCATED ON SHEET S-0001. GENERAL STRUCTURAL NOTES ARE LOCATED ON SHEET S-0002.
2. FINISH FLOOR REFERENCE ELEVATION IS 100'-0" = 7265.00'.
3. IF THIS SHEET IS NOT 24"X36", THEN IT IS A REDUCED SIZE PLOT. USE GRAPHIC SCALE ACCORDINGLY.

KEYED NOTES

1. C6X18GA STUD JOISTS @ 16" O.C.
2. 12" CONCRETE WALLS, SEE S-1100 FOR REINFORCING. (LFRS ELEMENT)
3. 12'-0"X28" PRE-CAST CONCRETE DOUBLE-TEE BEAMS.
4. 10'-8"X28" PRE-CAST CONCRETE DOUBLE-TEE BEAMS.
5. ROOF DECK: 9/16" 0.6C CSV CONFORM DECK, 24GA, AS PROVIDED BY VULCRAFT OR APPROVED EQUAL. GALVANIZED G60 FINISH. DECK SHALL BE CONTINUOUS OVER THE LENGTH OF THE DECK AREA. SEE ARCHITECTURAL DRAWINGS FOR INSULATION, ROOFING, ETC. ATTACH DECK AS FOLLOWS:
   A. PERPENDICULAR BEARING: 3 #12 TEK SCREWS, 5/35 PATTERN
   B. PARALLEL EDGES: #12 TEK SCREWS @ 12" O.C.
   C. SIDE LAPS: #10 TEK SCREWS @ 12" O.C.
6. 4" CAST-IN-PLACE CONCRETE TOPPING SLAB WITH #4 @ 18" O.C., FOR OPENINGS IN TOPPING SLAB SEE 1/S-5102. (LFRS ELEMENT)
7. AT EACH CORNER OF THE ROOF PROVIDE MEANS TO BOND REINFORCING STEEL TO LIGHTNING PROTECTION SYSTEM DOWN CONDUCTORS, SEE SHEET E-1106 KEY NOTE 4.
8. PENETRATION, SEE SCHEDULE ON S-7101 AND S-7102.
9. ROOF DECK: 1 1/2" DEEP B-DECK, 18 GAGE, G-60 AS PROVIDED BY CSI METAL DECK GROUP OR APPROVED EQUAL. DECK SHALL BE CONTINUOUS OVER 3 OR MORE SPANS (4 SUPPORTS). SEE ARCHITECTURAL DRAWINGS FOR INSULATION, ROOFING, ETC. ATTACH DECK AS FOLLOWS USING HILTI X-ENP-19 FASTENERS (ICC ESR-2197):
   A. PERPENDICULAR BEARINGS AT SHEET LAP: 36/9 PATTERN (9 FASTENERS FOR EACH 3'-0" PANEL SECTION, SEE 3/S-5123.
   B. PERPENDICULAR BEARINGS AT NON-LAP: 36/9 PATTERN (9 FASTENERS FOR EACH 3'-0" PANEL SECTION, SEE 3/S-5123.
   C. SIDE SEAMS: HILTI #10X3/4" MIN HWH OR HHWH, SELF DRILLING STEEL SCREWS @ 6" O.C. CONFORMING TO C1513-10R REQUIREMENTS (ICC ESR-2196).
   SEE SHEET S-4100 FOR STAIR BELOW.
10. PROVIDE 3/4"Ø PVC SLEEVE THRU DOUBLE-TEE STEM, SEE 2/S-5120.

NO	DATE	CLASS REV	ADC	DESCRIPTION	DWN	DES	CHKD	SUB	APP

AECOM

RLWTF-UP LOW LEVEL WASTE SUBPROJECT

ROOF FRAMING PLAN

BLDG. 230 TA-50

DRAWN	G.FLORES
DESIGN	D.AXELROD
CHECKED	C.ROSENBERGER
DATE	05-06-14

SUBMITTED: MANNY TARIN

APPROVED FOR RELEASE: ED ARTIGLIA

Los Alamos NATIONAL LABORATORY PO Box 1663 Los Alamos, New Mexico 87545

SHEET S-1101

72 OF 434

CLASSIFICATION | REVIEWER | DATE

PROJECT ID 100761 | DRAWING NO C55864 | REV 0

JAMES M. WEEKS NEW MEXICO 11384 REGISTERED PROFESSIONAL ENGINEER

5/12/14

File Location: Y:\IDE PROJECTS\LANL\LANL RLWTF LLW\DRAFTING\MODEL\CADD II\MAIN\55864-S-1101.DWG
Plotted By: FLORES, GABRIEL; Plot Date: Monday, May 12, 2014

12123

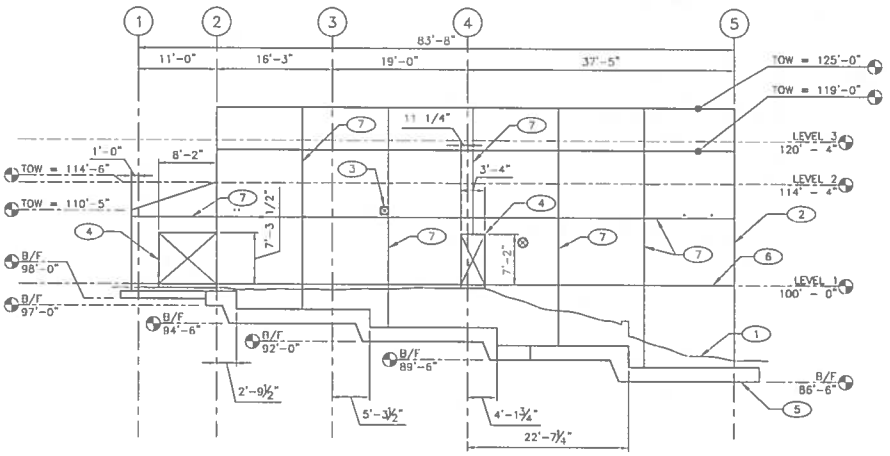

SOUTH ELEVATION

1/8"=1'-0"

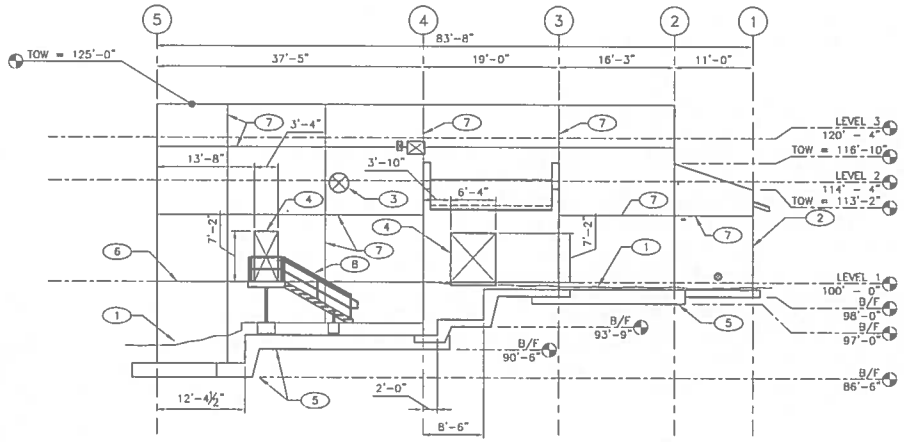

NORTH ELEVATION

1/8"=1'-0"

GENERAL NOTES

1. ABBREVIATIONS & LEGEND ARE LOCATED ON SHEET S-0001. GENERAL STRUCTURAL NOTES ARE LOCATED ON SHEET S-0002.
2. FINISH FLOOR REFERENCE ELEVATION IS 100'-0" = 7265.00'.
3. IF THIS SHEET IS NOT 24"X36", THEN IT IS A REDUCED SIZE PLOT. USE GRAPHIC SCALE ACCORDINGLY.
4. TOW ELEVATION IS TO PARAPET WHERE APPLICABLE.
5. SEE SCHEDULE S-7101 AND S-7102 FOR WALL PENETRATIONS NOT SHOWN.

KEYED NOTES

(1) GRADE, SEE CIVIL.

(2) 12" CONCRETE WALL, SEE PLAN S-1100 FOR REINFORCEMENT.

(3) WALL PENETRATION TYP, SEE 4/S-5101 AND PENETRATION SCHEDULE ON S-7101 AND S-7102.

(4) WALL OPENING, SEE 4/S-5101 TYP.

(5) CONCRETE FOOTING, SEE SCHEDULE S-7100 FOR SIZE AND REINFORCEMENT.

(6) CONSTRUCTION JOINT IN WALL PER 4/S-5100.

(7) 3/4" REVEAL PER 2/S-5100.

(8) STAIRS, SEE SHEET S-4100.

NO	DATE	CLASS REV	ADC	DESCRIPTION	DWN	DES	CHKD	SUB	APP

AECOM

RLWTF-UP LOW LEVEL WASTE SUBPROJECT

STRUCTURAL ELEVATIONS

DRAWN	G.FLORES
DESIGN	D.AXELROD
CHECKED	C.ROSENBERGER
DATE	05-08-14

BLDG. 230 TA-50

SUBMITTED MANNY TAREN

APPROVED FOR RELEASE ED ARTIGLIA

Los Alamos NATIONAL LABORATORY PO Box 1663 Los Alamos, New Mexico 87545

CLASSIFICATION | REVIEWER | DATE

PROJECT ID 100761 | DRAWING NO C55864 | REV 0

SHEET S-2100

73 OF 434

JAMES M. WEEKS NEW MEXICO 11384 REGISTERED PROFESSIONAL ENGINEER

5/12/14

File: Locs\Non Y:\ADE PROJECTS\LANL\LANL RLWTF LL\V\DRAFTING\MODEL\CAD2 11\VARIA\S5864-S-2100.DVG
Plotted By: FLORES, GABRIEL Plot Date: Monday, May 12, 2014

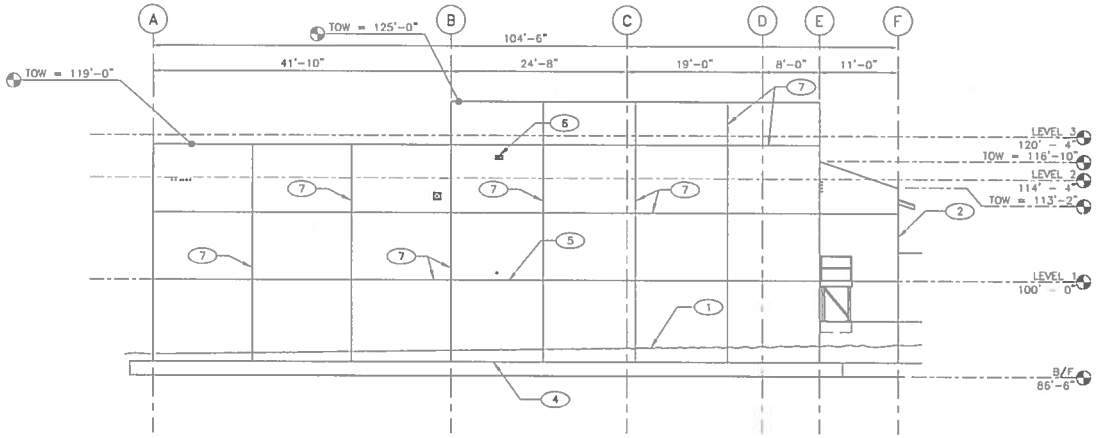

EAST ELEVATION

1/8"=1'-0"

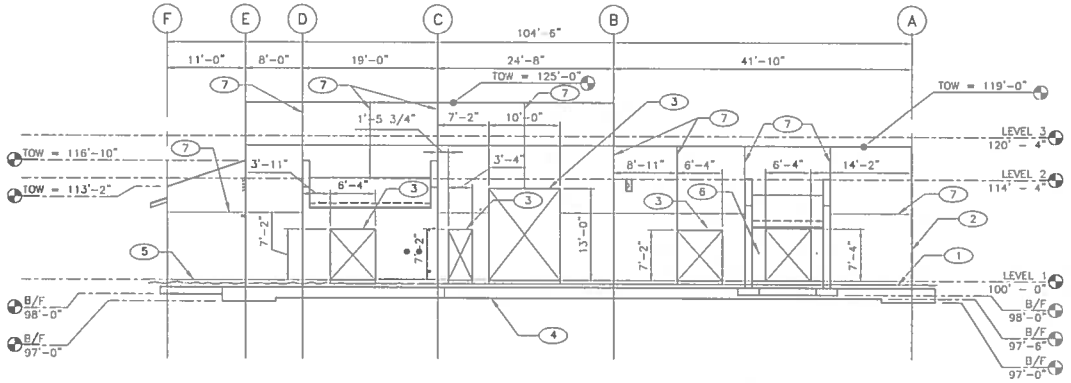

WEST ELEVATION

1/8"=1'-0"

GENERAL NOTES

1. ABBREVIATIONS & LEGEND ARE LOCATED ON SHEET S-0001. GENERAL STRUCTURAL NOTES ARE LOCATED ON SHEET S-0002.
2. FINISH FLOOR REFERENCE ELEVATION IS 100'-0" = 7265.00'.
3. IF THIS SHEET IS NOT 24"X36", THEN IT IS A REDUCED SIZE PLOT. USE GRAPHIC SCALE ACCORDINGLY.
4. TOW ELEVATION IS TO PARAPET WHERE APPLICABLE.
5. SEE SCHEDULE S-7101 AND S-7102 FOR WALL PENETRATIONS NOT SHOWN.

KEYED NOTES

1. GRADE, SEE CIVIL.
2. 12" CONCRETE WALL, SEE PLAN S-1100 FOR REINFORCEMENT.
3. WALL OPENING, SEE 4/S-5101 TYP.
4. CONCRETE FOOTING, SEE SCHEDULE S-7100 FOR SIZE AND REINFORCEMENT.
5. CONSTRUCTION JOINT IN WALL PER 4/S-5100.
6. WALL PENETRATION TYP, SEE 4/S-5101 AND PENETRATION SCHEDULE ON S-7101 AND S-7102.
7. 3/4" REVEAL PER 2/S-5100.

NO	DATE	CLASS REV	ADC	DESCRIPTION	DWN	DES	CHKD	SUB	APP

AECOM

RLWTF-UP LOW LEVEL WASTE SUBPROJECT

STRUCTURAL ELEVATIONS

BLDG. 230 TA-50

DRAWN	G.FLORES
DESIGN	D.AXELROD
CHECKED	C.ROSENBERGER
DATE	05-08-14

SUBMITTED: MANNY TARIN

APPROVED FOR RELEASE: ED ARTIGLIA

Los Alamos NATIONAL LABORATORY PO Box 1663 Los Alamos, New Mexico 87545

SHEET S-2101

74 OF 434

CLASSIFICATION | REVIEWER | DATE

PROJECT ID 100761 | DRAWING NO C55864 | REV 0

JAMES M. WEEKS NEW MEXICO 11384 REGISTERED PROFESSIONAL ENGINEER

5/12/14

File Location: Y:\IDE PROJECTS\LANL\LANL RLWTF LLV\DRAFTING\MODEL\CADD II\MAIN\55864-S-2101.DWG
Plotted By: FLORES, DEBRIS; Plot Date: Monday, May 12, 2014

: 12125

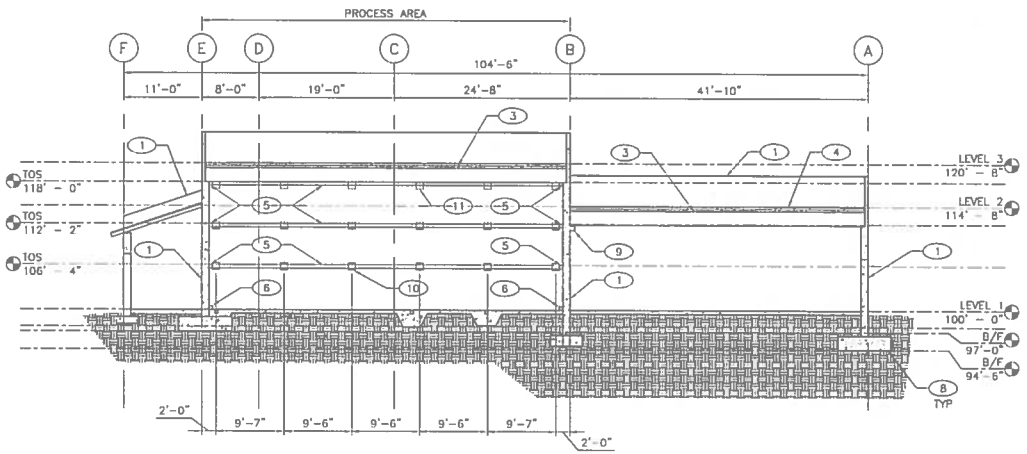

A SECTION
S-1100 ,S-1101
1/8"=1'-0"

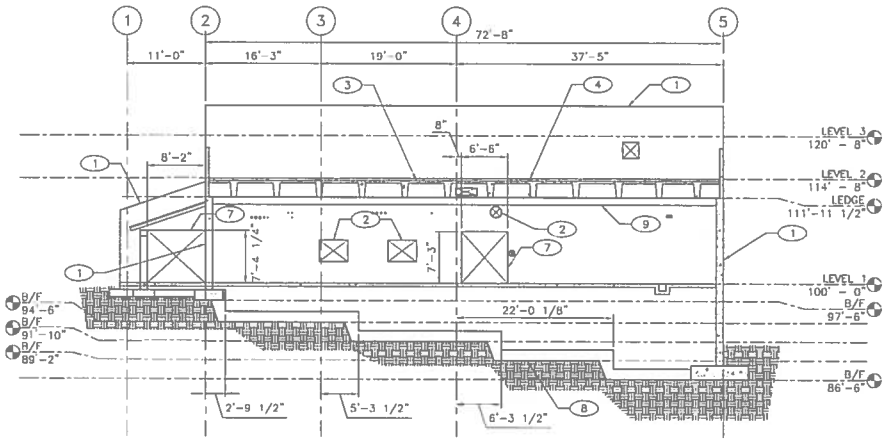

B SECTION
S-1100 ,S-1101
1/8"=1'-0"

GENERAL NOTES

1. ABBREVIATIONS & LEGEND ARE LOCATED ON SHEET S-0001. GENERAL STRUCTURAL NOTES ARE LOCATED ON SHEET S-0002.
2. FINISH FLOOR REFERENCE ELEVATION IS 100'-0" = 7265.00'.
3. IF THIS SHEET IS NOT 24"X36", THEN IT IS A REDUCED SIZE PLOT. USE GRAPHIC SCALE ACCORDINGLY.
4. REINFORCING NOT SHOWN FOR CLARITY.
5. SEE SCHEDULE S-7101 AND S-7102 FOR WALL PENETRATIONS NOT SHOWN.

KEYED NOTES

1. 12" CONCRETE WALL, SEE PLAN S-1100 FOR REINFORCEMENT.
2. WALL PENETRATION, SEE 4/S-5101 AND TYPICAL PENETRATION SCHEDULE ON S-7101 AND S-7102.
3. PRECAST CONCRETE DOUBLE-TEE PER PLAN S-1101.
4. CAST-IN-PLACE CONCRETE TOPPING SLAB, PER PLAN S-1101.
5. HSS6X6X1/4, SEE DETAIL 2/S-5121 & 3/S-5121.
6. 6"X6" HIGH CONCRETE CURB SEE 2/S-5110 AND 3/S-5110.
7. WALL OPENING TYP, SEE 4/S-5101.
8. CONCRETE FOOTING, SEE SCHEDULE S-7100 FOR SIZE AND REINFORCEMENT.
9. CONTINUOUS CONCRETE LEDGE, SEE 1/S-5121.
10. PIPE RACK SUPPORT EMBED PLATE, SEE 2/S-5121.
11. HSS6X6X1/4, TOP, SEE DETAIL 3/S-5121.

NO	DATE	CLASS REV	ADC	DESCRIPTION	DWN	DES	CHKD	SUB	APP

AECOM

RLWTF-UP LOW LEVEL WASTE SUBPROJECT

STRUCTURAL SECTIONS

BLDG. 230 TA-50

DRAWN	G.FLORES
DESIGN	D.AXELROD
CHECKED	C.ROSENBERGER
DATE	05-06-14

SUBMITTED MANNY TARIN

APPROVED FOR RELEASE ED ARTIGLIA

Los Alamos NATIONAL LABORATORY PO Box 1663 Los Alamos, New Mexico 87545

SHEET S-3100

75 OF 434

CLASSIFICATION | REVIEWER | DATE

PROJECT ID 100761 | DRAWING NO C55864 | REV 0

JAMES M. WEEKS NEW MEXICO 11384 REGISTERED PROFESSIONAL ENGINEER

James M. Weeks 5/12/14

File Location: Y:\DOE PROJECTS\LANL\LANL RLWTF LLW\DRAFTING\MODEL\CADD II\MAIN\55864-S-3100.DWG
Plotted By: FLORES, GABRIEL Plot Date: Monday, May 12, 2014

12126

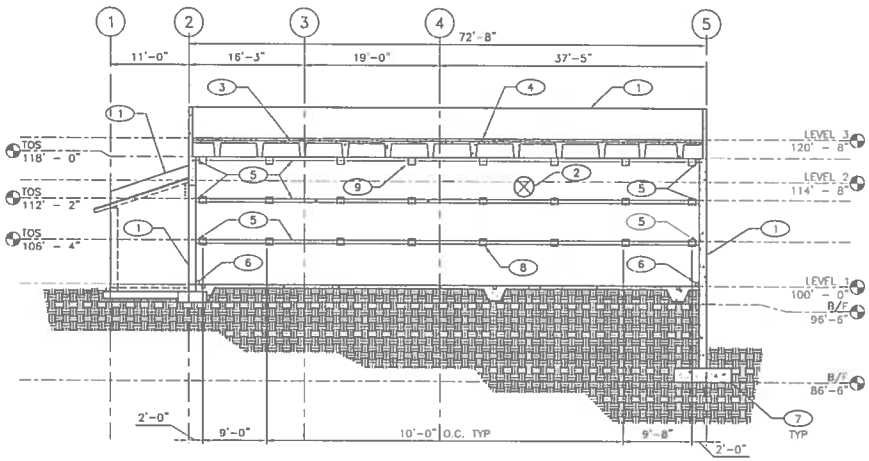

A S-1100 SECTION ,S-1101

1/8"=1'-0"

GENERAL NOTES

1. ABBREVIATIONS & LEGEND ARE LOCATED ON SHEET S-0001. GENERAL STRUCTURAL NOTES ARE LOCATED ON SHEET S-0002.
2. FINISH FLOOR REFERENCE ELEVATION IS 100'-0" = 7265.00'.
3. IF THIS SHEET IS NOT 24"X36", THEN IT IS A REDUCED SIZE PLOT. USE GRAPHIC SCALE ACCORDINGLY.
4. REINFORCING NOT SHOWN FOR CLARITY.
5. SEE SCHEDULE S-7101 AND S-7102 FOR WALL PENETRATIONS NOT SHOWN.

KEYED NOTES

1. 12" CONCRETE WALL, SEE PLAN S-1100 FOR REINFORCEMENT.
2. WALL PENETRATION, SEE 4/S-5101 AND TYPICAL PENETRATION SCHEDULE ON S-7101 AND S-7102.
3. PRECAST CONCRETE DOUBLE-TEE PER PLAN S-1101.
4. CAST-IN-PLACE CONCRETE TOPPING SLAB, PER PLAN S-1100.
5. HSS6X6X1/4, SEE DETAIL 2/S-5121 & 3/S-5121.
6. 6"X6" HIGH CONCRETE CURB, SEE 2/S-5110 AND 3/S-5110.
7. CONCRETE FOOTING, SEE SCHEDULE S-7100 FOR SIZE AND REINFORCEMENT.
8. PIPE RACK SUPPORT EMBED PLATES, SEE 2/S-5121.
9. HSS6X6X1/4, TOP, SEE DETAIL 3/S-5121.

NO	DATE	CLASS REV	ADC	DESCRIPTION	DWN	DES	CHKD	SUB	APP

AECOM

RLWTF-UP LOW LEVEL WASTE SUBPROJECT

STRUCTURAL SECTIONS

BLDG. 230 TA-50

DRAWN	G.FLORES
DESIGN	D.AKELROD
CHECKED	C.ROSENBERGER
DATE	05-06-14

SUBMITTED MANNY TARIN

APPROVED FOR RELEASE ED ARTIGLIA

Los Alamos NATIONAL LABORATORY PO Box 1663 Los Alamos, New Mexico 87545

SHEET S-3101

76 OF 434

CLASSIFICATION | REVIEWER | DATE

PROJECT ID 100761 | DRAWING NO C55864 | REV 0

JAMES M. WEEKS NEW MEXICO 11364 REGISTERED PROFESSIONAL ENGINEER

James M. Weeks 5/12/14

File Location: Y:\DOE PROJECTS\LANL\LANL RLWTF LLV\DRAFTING\MODEL\CADD IN\MAIN\55864-S-3101.DWG
Plotted By: FLORES, GABRIEL Plot Date: Monday, May 12, 2014

121 :

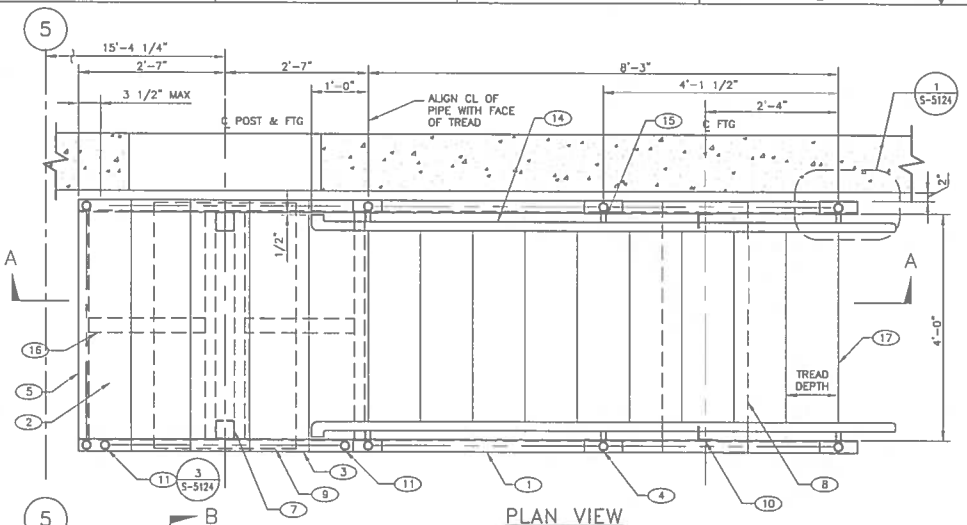

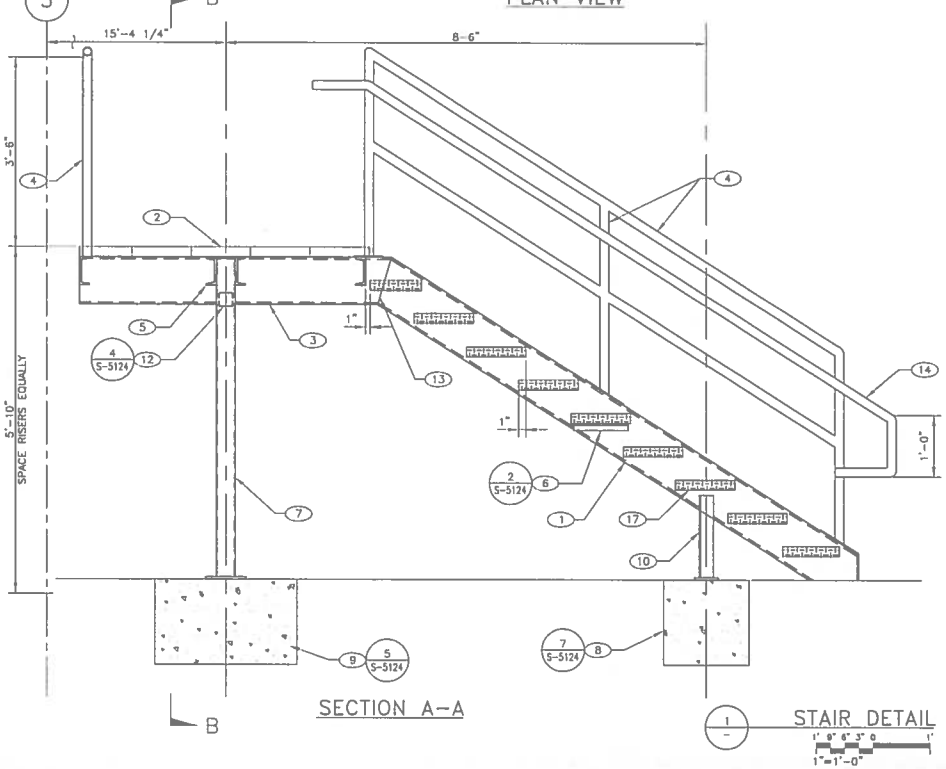

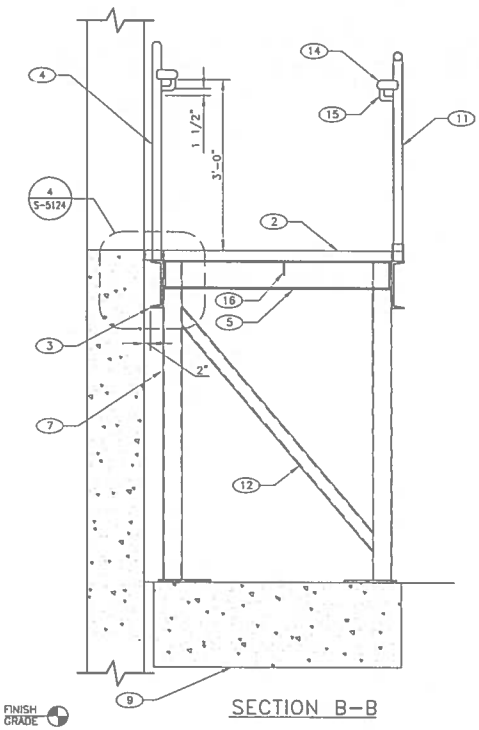

GENERAL NOTES

1. PROVIDE 1/4" GAP BETWEEN STAIR LANDING AND BUILDING.
2. PROVIDE 1/8" MINIMUM – 1/4" MAXIMUM GAP BETWEEN FRP SECTIONS AT LANDING.
3. STAIR DESIGN BASED ON:
   LANL ESM DRAWING ST_B1081-2
   CAL-12-00-0000-0012-S-R-0

KEYED NOTES

(1) C10X15.3 STRINGER
(2) FIBER REINFORCED POLYMER (FRP) COVERED LANDING.
(3) C10X15.3 LANDING BEAM, TYP OF 2
(4) PIPE 1 1/2" X-STRONG
(5) C6X13 LANDING BEAM, TYP OF 4
(6) L2 1/2"X1 1/2"X1/4" (LLH) TREAD SEAT

KEYED NOTES CONTINUED

(7) HSS4"X4"X1/4" POST, TYP OF 2
(8) 1'-6"X4'-5"X1'-6" DEEP FOOTING BELOW
(9) 2'-6"X4'-4"X1'-6" DEEP FOOTING BELOW
(10) L3"X3"X1/4" TYP OF 2
(11) PIPE 1 1/2" X-STRONG REMOVABLE GUARD.
(12) HSS3"X3"X1/4" BRACE.
(13) MITRE JOINT
(14) PIPE 1 1/2" X-STRONG HANDRAIL, TYP OF 2
(15) PIPE 3/4" STD HANDRAIL BRACKET, TYP OF 6
(16) L3"X3"X1/4" @ MIDSPAN OF LANDING, TYP OF 2
(17) FIBER REINFORCED POLYMER (FRP) STAIR TREADS:FIBER REINFORCED POLYMER (FRP) COVERED STAIR TREADS, MINIMUM DIMENSIONS 2 1/8"X12 1/4", FIBERGRATE OR APPROVED EQUAL:
A. SOLID RISERS SHALL BE PROVIDED AT IBC OCCUPANCY CATEGORY A AND B BUILDINGS. WHERE SOLID RISERS ARE REQUIRED, SUBCONTRACTOR SHALL PROVIDE 1/4" MAXIMUM DRAINAGE HOLE.
B. COVERED STAIR TREADS SHALL BE MANUFACTURED BY FIBERGRATE COMPOSITE STRUCTURES INC., DALLAS, TX OR APPROVED EQUAL. PRODUCT SUBSTITUTION PER LANL MASTER SPEC FOR SUBSTITUTION PROCEDURES.
C. THE SUBCONTRACTOR SHALL FURNISH MANUFACTURER'S SHOP DRAWINGS SHOWING MATERIAL SIZES, TYPES, STYLES, PART OR CATALOG NUMBERS, COMPLETE DETAILS FOR THE FABRICATION AND ERECTION OF COMPONENTS INCLUDING, BUT NOT LIMITED TO, LOCATION, LENGTHS, TYPE AND SIZES OF FASTENERS, CLIP ANGLES, MEMBER SIZES, AND CONNECTION DETAILS.
D. THE SUBCONTRACTOR SHALL SUBMIT THE MANUFACTURER'S PUBLISHED LITERATURE INCLUDING STRUCTURAL DESIGN DATA, STRUCTURAL PROPERTIES DATA, GRATING LOAD/DEFLECTION TABLES, CORROSION RESISTANCE TABLES, CERTIFICATES OF COMPLIANCE, TEST REPORTS AS APPLICABLE, CONCRETE ANCHOR SYSTEMS AND THEIR ALLOWABLE LOAD TABLES, AND DESIGN CALCULATIONS FOR SYSTEMS NOT SIZED OR DESIGNED IN THE CONTRACT DOCUMENTS.
E. FRP TREADS SHALL HAVE NON-SLIP SURFACING.
F. FRP TREAD DEFLECTION IS NOT TO EXCEED L/240 (TOTAL LOAD) AND L/360 (LIVE LOAD).
G. FRP TREADS SHALL BE TIED DOWN WITH APPROPRIATE ANCHORS OR CLIPS. MANUFACTURER TO PROVIDE OPENINGS, HOLES, AND BOLTS WHERE LOCATED ON THE DRAWINGS.
H. BOLTS OR CLIPS SHALL NOT PROJECT BEYOND THE WALKING SURFACE. SUBCONTRACTOR TO PROVIDE COUNTERSUNK BOLTS AS REQUIRED.
I. FRP TREADS SHALL BE SHOP FABRICATED TO DIMENSIONS SHOWN ON DRAWINGS. DO NOT FIELD CUT.

STAIR DETAIL
1" = 1'-0"

NO	DATE	CLASS REV	ADC	DESCRIPTION	DWN	DES	CHKD	SUB	APP

AECOM

RLWTF-UP LOW LEVEL WASTE SUBPROJECT

STAIR PLANS

DRAWN	G.FLORES
DESIGN	D.AKELROD
CHECKED	C.ROSENBERGER
DATE	05-06-14

BLDG. 230 TA-50

SUBMITTED MANNY TARIN — APPROVED FOR RELEASE ED ARTIGLIA

Los Alamos NATIONAL LABORATORY PO Box 1663 Los Alamos, New Mexico 87545

SHEET S-4100
77 OF 434

CLASSIFICATION | REVIEWER | DATE

PROJECT ID 100761 | DRAWING NO C55864 | REV 0

JAMES M. WELLS NEW MEXICO 11364 REGISTERED PROFESSIONAL ENGINEER
5/12/14

827127

P:\FWO-TC\LANL Eng Standards\Unofficial Details\Struct\ST-B1081-2 unofficial dwg, 04/13/12 @ 08:55 119113

GENERAL NOTES

1. ABBREVIATIONS & LEGEND ARE LOCATED ON SHEET S-0001. GENERAL STRUCTURAL NOTES ARE LOCATED ON SHEET S-0002.
2. IF THIS SHEET IS NOT 24"X36", THEN IT IS A REDUCED SIZE PLOT. USE GRAPHIC SCALE ACCORDINGLY.

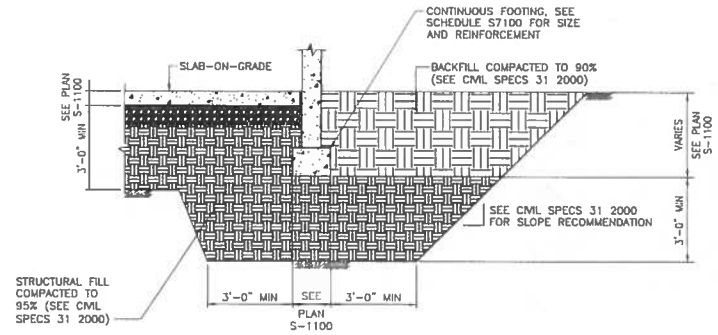

SECTION VIEW

1 S-1100 TYPICAL OVER EXCAVATION DETAIL
, S-5100

1/2"=1'-0"

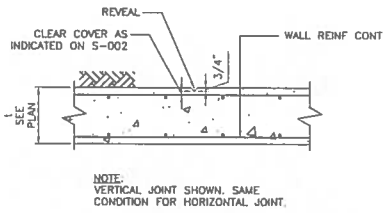

NOTE:
VERTICAL JOINT SHOWN. SAME CONDITION FOR HORIZONTAL JOINT.

PLAN VIEW

2 S-2100 TYPICAL WALL REVEAL
, S-2101, S-5100

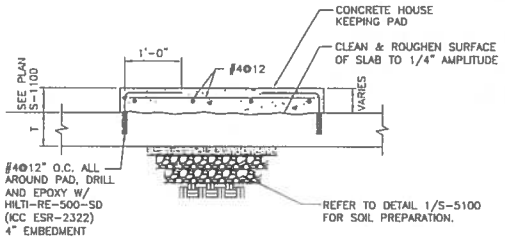

SECTION VIEW

3 S-1100 TYPICAL HOUSEKEEPING PAD DETAIL

1"=1'-0"

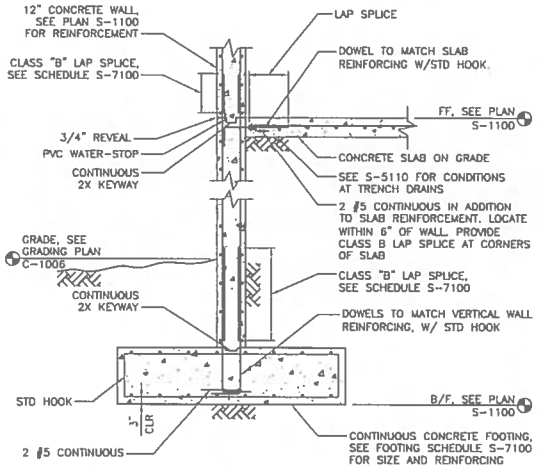

SECTION VIEW

4 S-1100 TYPICAL CONCRETE WALL @ SLAB ON GRADE

1/2"=1'-0"

JAMES M. WEEKS NEW MEXICO 11384 REGISTERED PROFESSIONAL ENGINEER

James M. Weeks 5/12/14

NO	DATE	CLASS REV	ADC	DESCRIPTION	DWN	DES	CHKD	SUB	APP

AECOM

RLWTF-UP LOW LEVEL WASTE SUBPROJECT

TYPICAL DETAILS

BLDG. 230 TA-50

DRAWN	G.FLORES
DESIGN	D.AXELROD
CHECKED	C.ROSENBERGER
DATE	05-06-14

SUBMITTED: MANNY TARIN

APPROVED FOR RELEASE: ED ARTIGLIA

Los Alamos NATIONAL LABORATORY PO Box 1663 Los Alamos, New Mexico 87545

SHEET S-5100

78 OF 434

CLASSIFICATION | REVIEWER | DATE

PROJECT ID 100761 | DRAWING NO C55864 | REV 0

File Location: Y:\DOE PROJECTS\LANL\LANL RLWTF LLV\DRAFTING\MODEL\CADD II\MAIN\S5864-S-5100.DWG
Plotted By: FLORES, GABRIEL Plot Date: Monday, May 12, 2014

: 12129

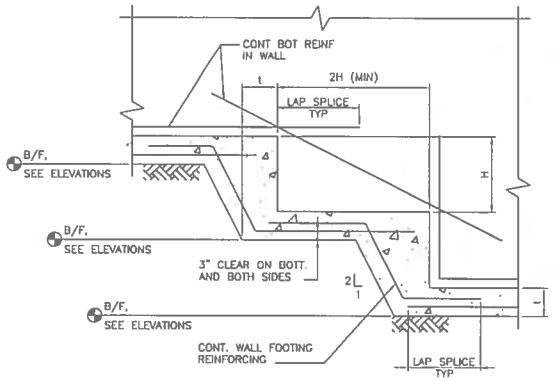

SECTION VIEW

1 S-1100 TYPICAL STEPPED WALL FOUNDATION

1'-0" 6" 3" 0 1'
1"=1'-0"

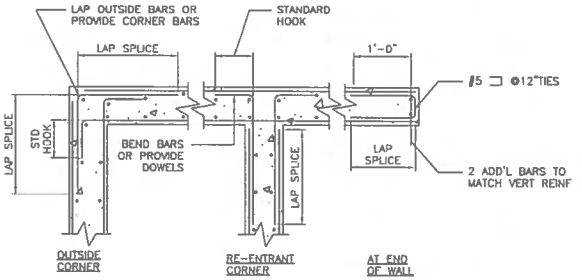

NOTE:
CORNER BARS AND/OR DOWELS TO MATCH HORIZONTAL REINFORCING.

PLAN VIEW

2 S-1100 TYPICAL CONCRETE WALL REINFORCING

1'-0" 6" 3" 0 1'
1"=1'-0"

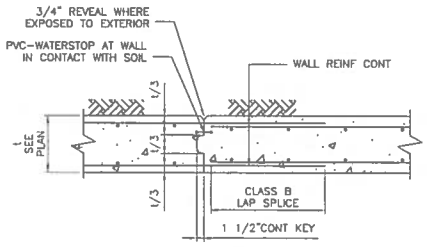

PLAN VIEW

3 S-1100 TYPICAL WALL CONSTRUCTION JOINT

1'-0" 6" 3" 0 1'
1"=1'-0"

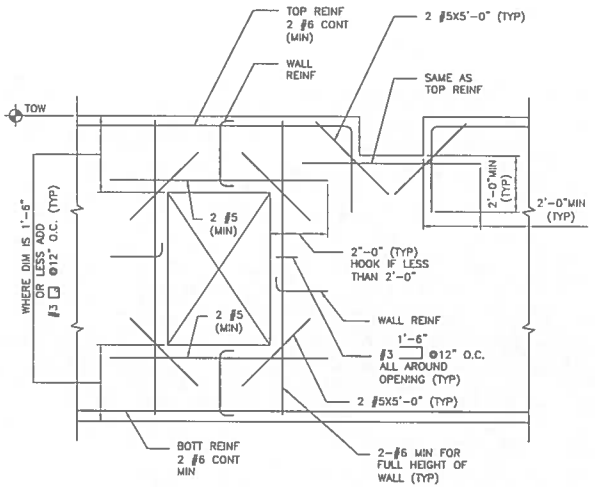

NOTE:
1. IF OPENING IS SMALL AND REINFORCING IS NOT INTERRUPTED NO ADDITIONAL REINFORCING IS REQUIRED.
2. ALL REINFORCING SHOWN IS ASTM A706.

ELEVATION VIEW

4 S-2100 , S-2101, S-3100 TYPICAL REINFORCING @ WALL OPENINGS

1'-0" 6" 3" 0 1' 2' 3'
1/2"=1'-0"

GENERAL NOTES

1. ABBREVIATIONS & LEGEND ARE LOCATED ON SHEET S-0001. GENERAL STRUCTURAL NOTES ARE LOCATED ON SHEET S-0002.
2. IF THIS SHEET IS NOT 24"X36", THEN IT IS A REDUCED SIZE PLOT. USE GRAPHIC SCALE ACCORDINGLY.

NO	DATE	CLASS REV	ADC	DESCRIPTION	DWN	DES	CHKD	SUB	APP

AECOM

RLWTF-UP LOW LEVEL WASTE SUBPROJECT

TYPICAL DETAILS

DRAWN	G.FLORES
DESIGN	D.AXELROD
CHECKED	C.ROSENBERGER
DATE	05-08-14

BLDG. 230 TA-50

SUBMITTED MANNY TAREN — APPROVED FOR RELEASE ED ARTIGLIA

Los Alamos NATIONAL LABORATORY PO Box 1663 Los Alamos, New Mexico 87545

SHEET S-5101

79 OF 434

CLASSIFICATION — REVIEWER — DATE

PROJECT ID 100761 — DRAWING NO C55864 — REV 0

JAMES M. WELLS NEW MEXICO 11384 REGISTERED PROFESSIONAL ENGINEER
5/12/14

C55864_1
File: L:\ACAD PROJECTS\LANL\LANL RLWTF LL\VA\DRAFTING\MODEL\CAD IT\MAIN\55864-1-S-S101.DWG
Plotted By: FLORES, GABRIEL Plot Date: Monday, May 12, 2014

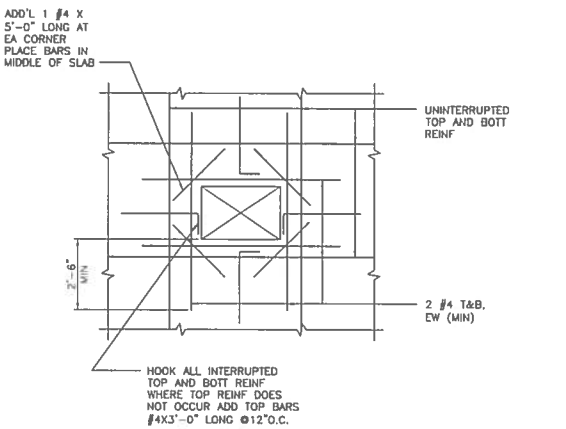

PLAN VIEW

1 / S-1101 TYPICAL REINFORCING @ OPENING IN TOPPING SLAB

1' 6" 0 1' 2' 3'
1/2"=1'-0"

GENERAL NOTES

1. ABBREVIATIONS & LEGEND ARE LOCATED ON SHEET S-0001. GENERAL STRUCTURAL NOTES ARE LOCATED ON SHEET S-0002.
2. IF THIS SHEET IS NOT 24"X36", THEN IT IS A REDUCED SIZE PLOT. USE GRAPHIC SCALE ACCORDINGLY.

NO	DATE	CLASS REV	ADC	DESCRIPTION	DWN	DES	CHKD	SUB	APP

AECOM

RLWTF-UP LOW LEVEL WASTE SUBPROJECT

TYPICAL DETAILS

BLDG. 230 TA-50

DRAWN	G.FLORES
DESIGN	D.AXELROD
CHECKED	C.ROSENBERGER
DATE	05-06-14

SUBMITTED: MANNY TARSH

APPROVED FOR RELEASE: ED ARTIGLIA

Los Alamos NATIONAL LABORATORY PO Box 1663 Los Alamos, New Mexico 87545

SHEET S-5102

80 OF 434

CLASSIFICATION | REVIEWER | DATE

PROJECT ID 100761 | DRAWING NO C55864 | REV 0

JAMES M. WEEKS NEW MEXICO 11384 REGISTERED PROFESSIONAL ENGINEER

James M. Weeks 5/12/14

File Location: T:\DOE PROJECTS\LANL\LANL RLWTF LLV\DRAFTING\MODEL\CADD II\MAIN\55864-S-5102.DWG
Plotted By: FLORES, CARRIE; Plot Date: Monday, May 12, 2014

121 31

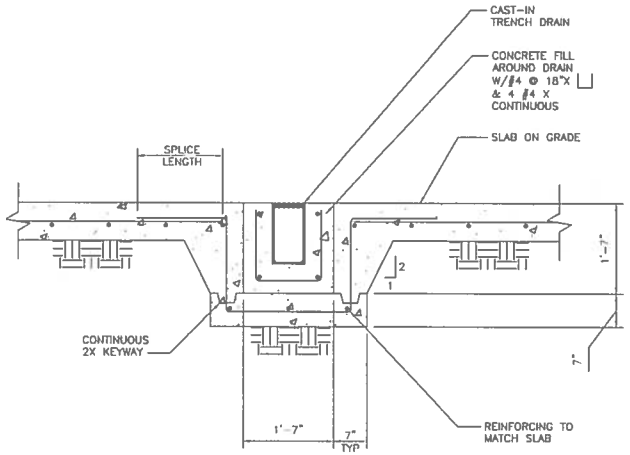

SECTION VIEW

1 S-1100 TRENCH DRAIN @ SLAB INTERIOR

1" 9" 6" 3" 0 1"
1"=1'-0"

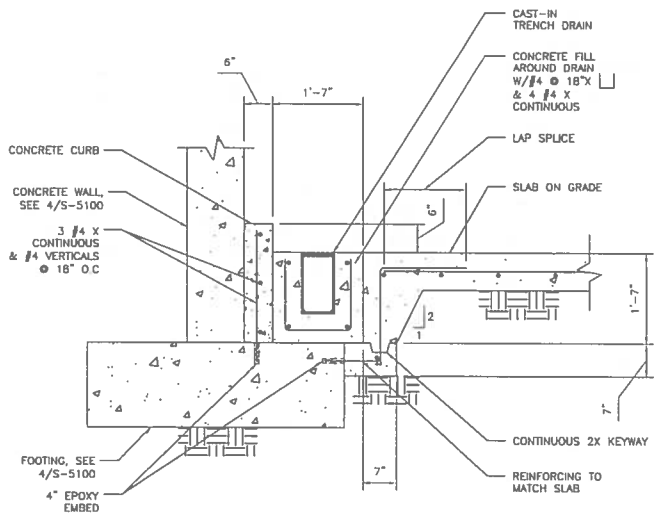

SECTION VIEW

2 S-1100 TRENCH DRAIN @ WALL, SHALLOW FOOTING

1" 9" 6" 3" 0 1"
1"=1'-0"

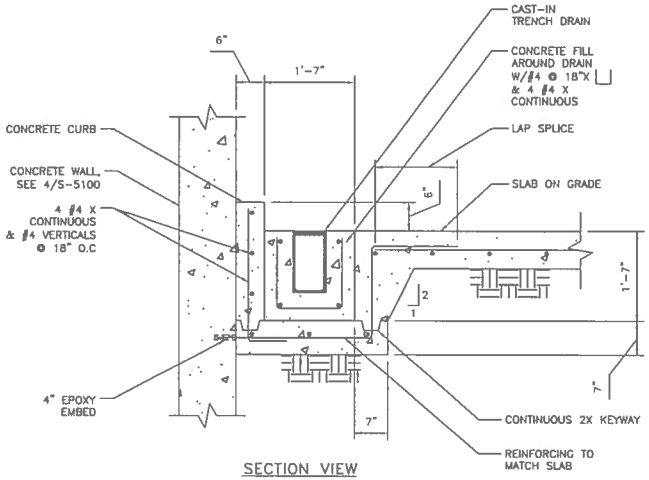

SECTION VIEW

3 S-1100 TRENCH DRAIN @ WALL, DEEP FOOTING

1" 9" 6" 3" 0 1"
1"=1'-0"

GENERAL NOTES

1. ABBREVIATIONS & LEGEND ARE LOCATED ON SHEET S-0001. GENERAL STRUCTURAL NOTES ARE LOCATED ON SHEET S-0002.
2. IF THIS SHEET IS NOT 24"X36", THEN IT IS A REDUCED SIZE PLOT. USE GRAPHIC SCALE ACCORDINGLY.

NO	DATE	CLASS REV	ADC	DESCRIPTION	DWN	DES	CHKD	SUB	APP

AECOM

RLWTF-UP LOW LEVEL WASTE SUBPROJECT

FOUNDATION DETAILS

BLDG. 230 TA-50

DRAWN	G.FLORES
DESIGN	D.AXELROD
CHECKED	C.ROSENBERGER
DATE	05-06-14

SUBMITTED: MANNY TARIN

APPROVED FOR RELEASE: ED ARTIGLIA

Los Alamos NATIONAL LABORATORY PO Box 1663 Los Alamos, New Mexico 87545

SHEET S-5110

81 OF 434

CLASSIFICATION | REVIEWER | DATE

PROJECT ID 100761 | DRAWING NO C55864 | REV 0

JAMES M. WEEKS NEW MEXICO 11584 REGISTERED PROFESSIONAL ENGINEER

James M. Weeks 5/12/14

File Location: Y:\NDE PROJECTS\LANL\LANL RLWTF LLV\DRAFTING\MODEL\CADD II\MAIN\55864-S-5110.DWG
Plotted By: FLORES, GABRIEL; Plot Date: Monday, May 12, 2014

12132

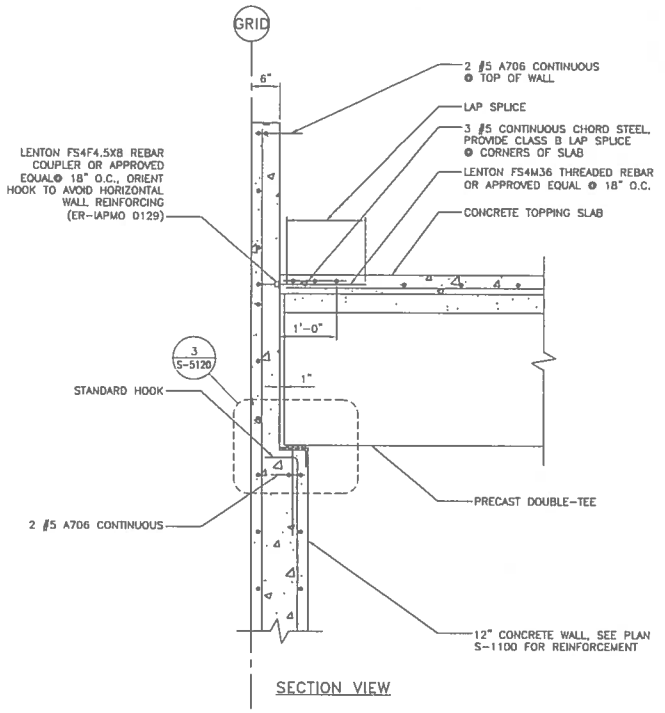

1 S-1101 DOUBLE-TEE BEARING @ CONCRETE WALL

1" 9" 6" 3" 0 1"
1"=1'-0"

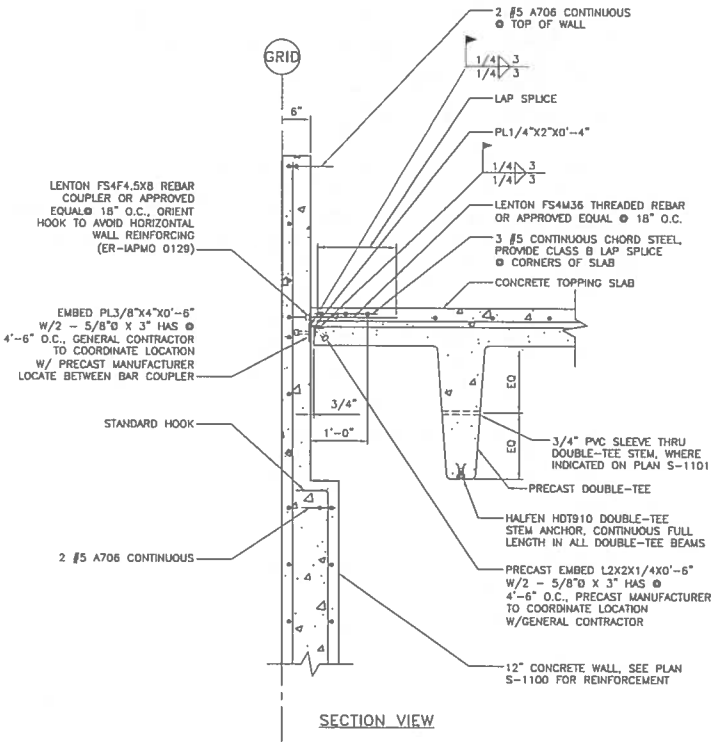

2 S-1101 DOUBLE-TEE @ CONCRETE WALL

1" 9" 6" 3" 0 1"
1"=1'-0"

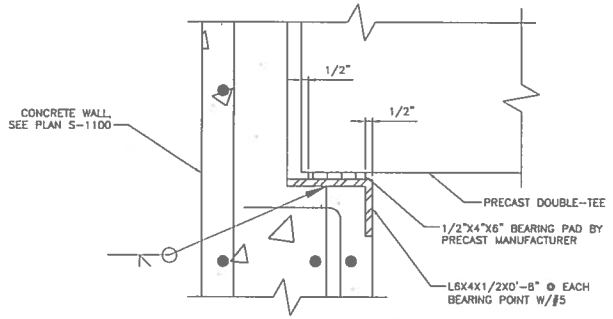

3 S-5120 DOUBLE-TEE BEARING PAD AT WALL

0 1" 2" 4" 6" 8"
3"=1'-0"

GENERAL NOTES

1. ABBREVIATIONS & LEGEND ARE LOCATED ON SHEET S-0001. GENERAL STRUCTURAL NOTES ARE LOCATED ON SHEET S-0002.
2. IF THIS SHEET IS NOT 24"X36", THEN IT IS A REDUCED SIZE PLOT. USE GRAPHIC SCALE ACCORDINGLY.

NO	DATE	CLASS REV	ADC	DESCRIPTION	DWN	DES	CHKD	SUB	APP

AECOM

RLWTF-UP LOW LEVEL WASTE SUBPROJECT

FRAMING DETAILS

BLDG. 230 TA-50

DRAWN	G.FLORES
DESIGN	D.AXELROD
CHECKED	C.ROSENBERGER
DATE	05-06-14

SUBMITTED: MANNY TARIN

APPROVED FOR RELEASE: ED ARTIGLIA

Los Alamos NATIONAL LABORATORY PO Box 1663 Los Alamos, New Mexico 87545

SHEET S-5120

82 OF 434

CLASSIFICATION | REVIEWER | DATE

PROJECT ID 100761 | DRAWING NO C55864 | REV 0

JAMES M. WEEKS NEW MEXICO 11364 REGISTERED PROFESSIONAL ENGINEER

James M. Weeks 5/12/14

File Location: Y:\IDEE PROJECTS\LANL\LANL RLWTF LLW\DRAFTING\MODEL\CADD II\MAIN\55864-S-5120.DWG
Plotted By: FLORES, GABRIEL Plot Date: Monday, May 12, 2014

121133

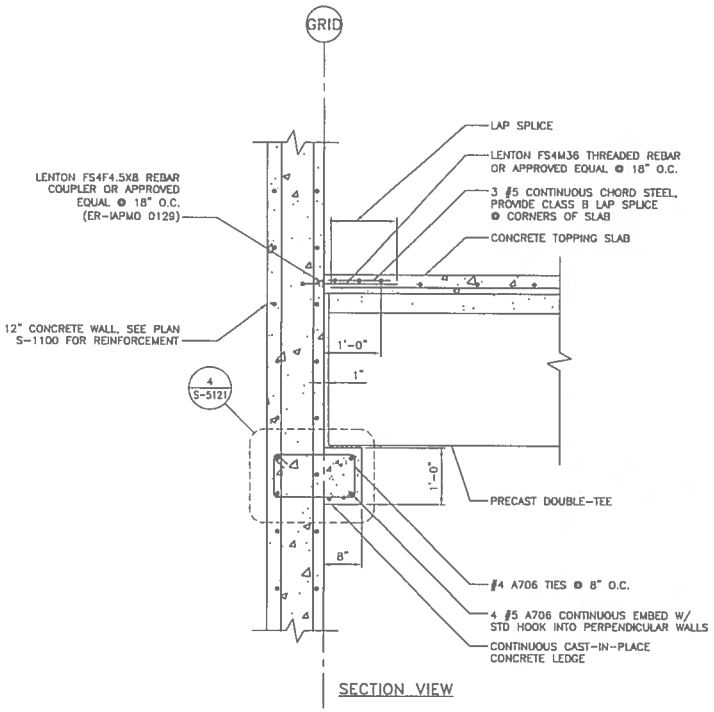

1 S-1101 DOUBLE-TEE BEARING @ CONTINUOUS LEDGE

1' 0" 6" 3" 0 1'
1"=1'-0"

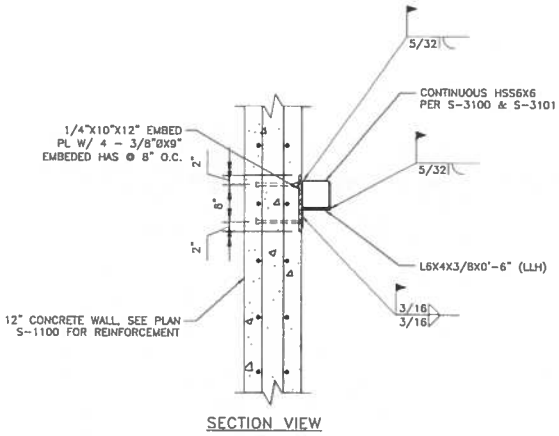

2 S-3100 HSS @ CONCRETE WALL, S-3101

1' 0" 6" 3" 0 1'
1"=1'-0"

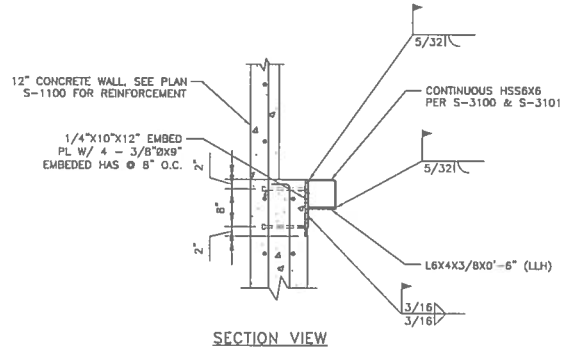

3 S-3100 HSS @ CONCRETE WALL, S-3101

1' 0" 6" 3" 0 1'
1"=1'-0"

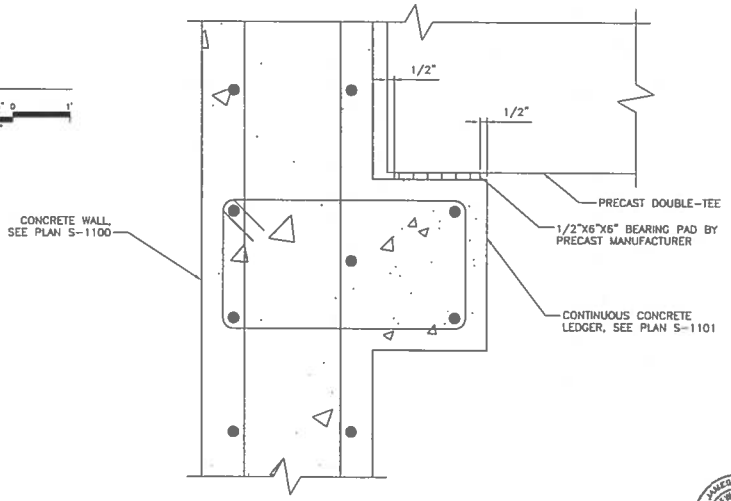

4 S-5121 DOUBLE-TEE BEARING PAD AT LEDGER

0 1" 2" 4" 6" 8"
3"=1'-0"

GENERAL NOTES

1. ABBREVIATIONS & LEGEND ARE LOCATED ON SHEET S-0001. GENERAL STRUCTURAL NOTES ARE LOCATED ON SHEET S-0002.
2. IF THIS SHEET IS NOT 24"X36", THEN IT IS A REDUCED SIZE PLOT. USE GRAPHIC SCALE ACCORDINGLY.

NO	DATE	CLASS REV	ADC	DESCRIPTION	DWN	DES	CHKD	SUB	APP

AECOM

RLWTF-UP LOW LEVEL WASTE SUBPROJECT

FRAMING DETAILS

DRAWN	G.FLORES	
DESIGN	D.AXELROD	
CHECKED	C.ROSENBERGER	
DATE	05-06-14	

BLDG. 230 TA-50

SUBMITTED MANNY TARIN

APPROVED FOR RELEASE ED ARTIGLIA

Los Alamos NATIONAL LABORATORY PO Box 1663 Los Alamos, New Mexico 87545

SHEET S-5121

83 OF 434

CLASSIFICATION REVIEWER DATE

PROJECT ID 100761

DRAWING NO C55864

REV 0

JAMES M. WALKER NEW MEXICO 11384 REGISTERED PROFESSIONAL ENGINEER

5/12/14

File: Loos Horn T:\ADE PROJECTS\LANL\LANL RLWTF LL\VS\DRAFTING\MODELS\CAD2 11\VMAIN\C55864-S-5121.DWG
Plotted By: FLORES, GABRIEL Plot Date: Monday, May 12, 2014

121121

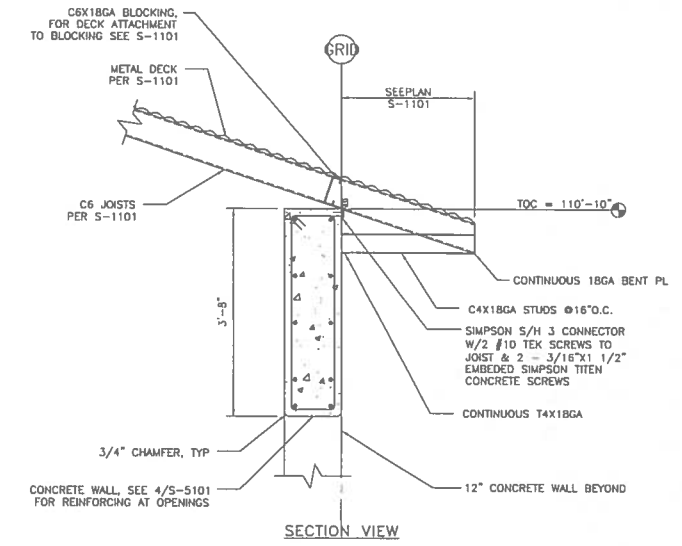

1 S-1101 ROOF FRAMING @ CONCRETE BEAM

1/2"=1'-0"

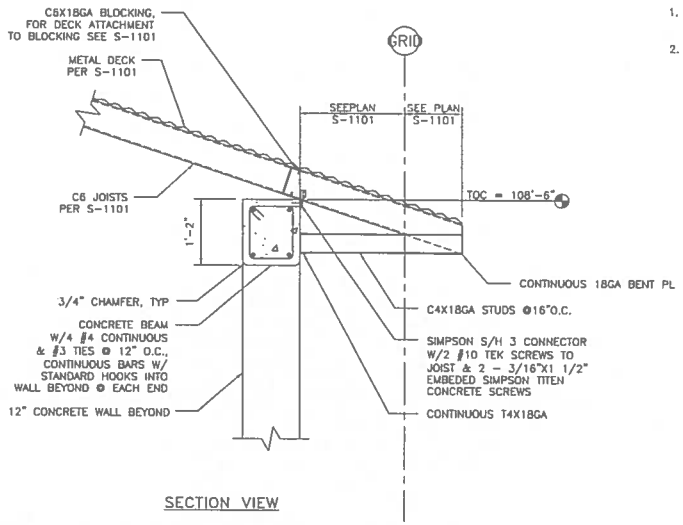

2 S-1101 ROOF FRAMING @ CONCRETE WALL

1/2"=1'-0"

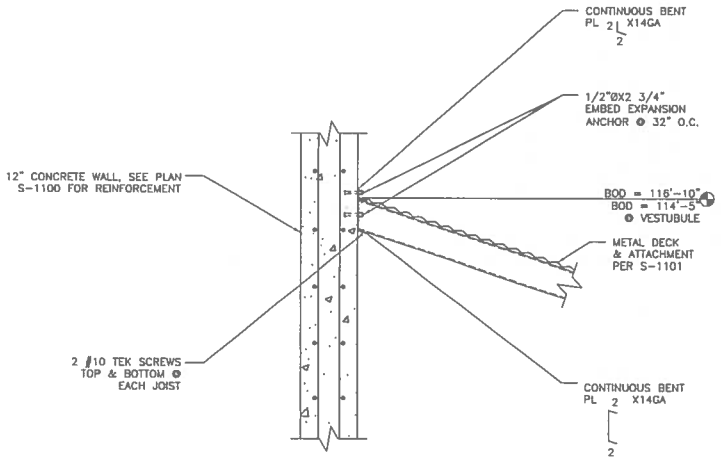

3 S-1101 ROOF FRAMING @ CONCRETE WALL

1/2"=1'-0"

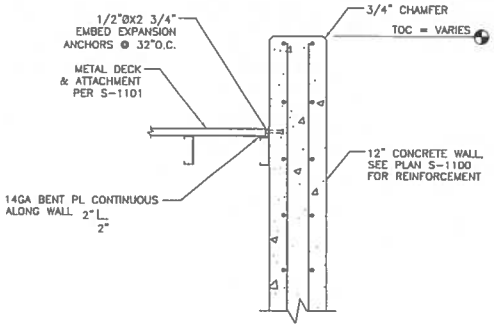

4 S-1101 DECKING @ WALL

1/2"=1'-0"

GENERAL NOTES

1. ABBREVIATIONS & LEGEND ARE LOCATED ON SHEET S-0001. GENERAL STRUCTURAL NOTES ARE LOCATED ON SHEET S-0002.
2. IF THIS SHEET IS NOT 24"X36", THEN IT IS A REDUCED SIZE PLOT. USE GRAPHIC SCALE ACCORDINGLY.

NO	DATE	CLASS REV	ADC	DESCRIPTION	DWN	DES	CHKD	SUB	APP

AECOM

RLWTF-UP LOW LEVEL WASTE SUBPROJECT

FRAMING DETAILS

BLDG. 230 TA-50

DRAWN	G.FLORES
DESIGN	D.AKELROD
CHECKED	C.ROSENBERGER
DATE	05-06-14

SUBMITTED MANNY TARIN

APPROVED FOR RELEASE ED ARTIGLIA

Los Alamos NATIONAL LABORATORY PO Box 1663 Los Alamos, New Mexico 87545

SHEET S-5122

84 OF 434

CLASSIFICATION | REVIEWER | DATE

PROJECT ID 100761 | DRAWING NO C55864 | REV 0

JAMES M. WEEKS NEW MEXICO 11384 REGISTERED PROFESSIONAL ENGINEER

5/12/14

S5122

File: Locks Horn: TA-50\DE PROJECTS\PLANS\PLANS_RLWTF LL\V3\DRAFTING\MODEL\CAD2 II\MAIN\55864-S-5122.DWG
Plotted By: FLORES, GABRIEL Plot Date: Monday, May 12, 2014

GENERAL NOTES

1. IF THIS SHEET IS NOT 24"x36", THEN IT IS A REDUCED SIZE PLOT. USE GRAPHIC SCALE ACCORDINGLY.
2. ABBREVIATIONS & LEGEND ARE LOCATED ON SHEET S-0001. GENERAL STRUCTURAL NOTES ARE LOCATED ON SHEET S-0002.

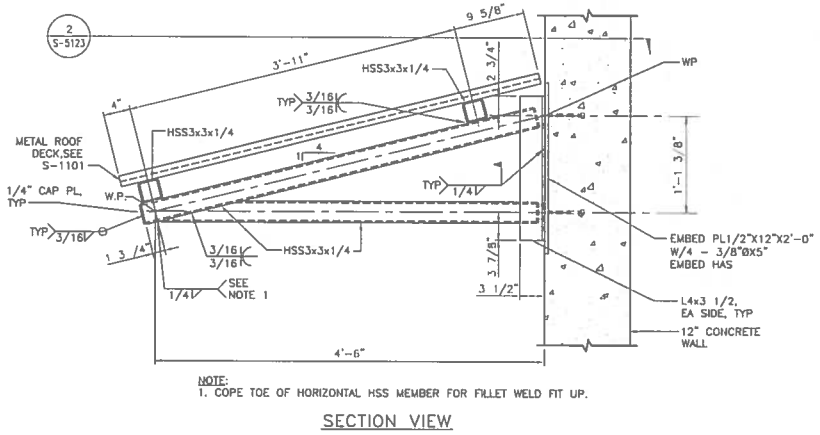

NOTE:
1. COPE TOE OF HORIZONTAL HSS MEMBER FOR FILLET WELD FIT UP.

SECTION VIEW

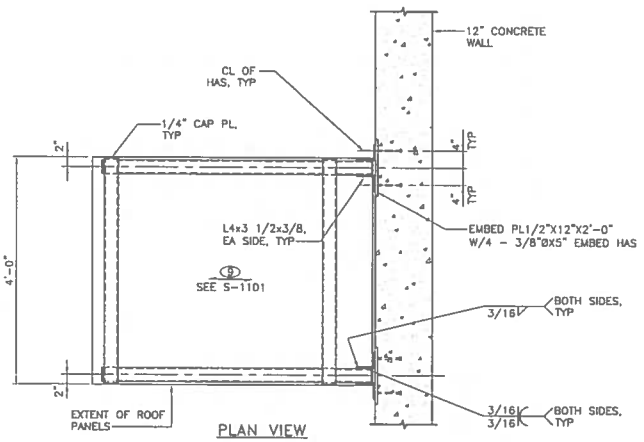

PLAN VIEW

1 S-1101 CANOPY AT CONCRETE WALL

1 1/2"=1'-0"

2 S-5123 CANOPY AT CONCRETE WALL

1"=1'-0"

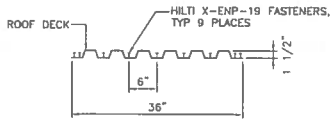

NOTE: SEE ICC ESR-2197

PATTERN 36/9

3 S-1101 ROOF DECK FASTENER CONFIGURATION

1"=1'-0"

JAMES M. WELCH NEW MEXICO 11384 REGISTERED PROFESSIONAL ENGINEER
5/12/14

NO	DATE	CLASS REV	ADC	DESCRIPTION	DWN	DES	CHKD	SUB	APP

AECOM

RLWTF-UP LOW LEVEL WASTE SUBPROJECT

FRAMING DETAILS

DRAWN	G.FLORES
DESIGN	D.AXELROD
CHECKED	J.WELCH
DATE	05-08-14

BLDG. 230 TA-50

SUBMITTED MANNY TARIN

APPROVED FOR RELEASE ED ARTIGLIA

Los Alamos NATIONAL LABORATORY PO Box 1663 Los Alamos, New Mexico 87545

SHEET S-5123

85 OF 434

CLASSIFICATION REVIEWER DATE

PROJECT ID 100761

DRAWING NO C55864

REV 0

File: Lewis Mtn TA-50\DE PROJECTS\CAD\LA\ML RLWTF LL\V\DRAFTING\MODEL\CAD2 [2]\MAIN\55864-S-5123.DWG
Plotted By: ELOPEZ, GABRIEL Plot Date: Monday, May 12, 2014

55211 : 121361

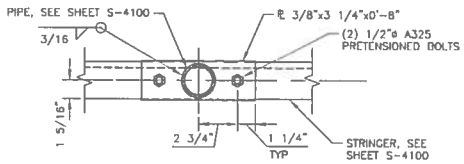

SECTION VIEW

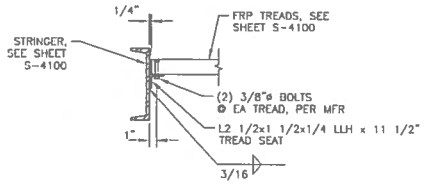

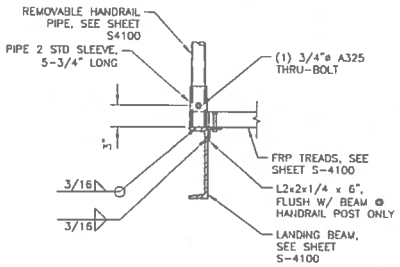

GENERAL NOTES

1. REFER TO SHEET S-4100 FOR SIZES NOT SHOWN ON THIS SHEET.
2. STAIRS BASED ON:
   LANL ESM DRAWING #ST_B10B1-3,
   CAL-12-00-0000-0012-S-R-0.

1 S-4100 DETAIL
3"=1'-0"

2 S-4100 DETAIL
1 1/2"=1'-0"

3 S-4100 DETAIL
1 1/2"=1'-0"

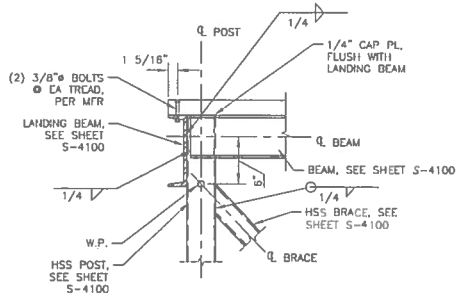

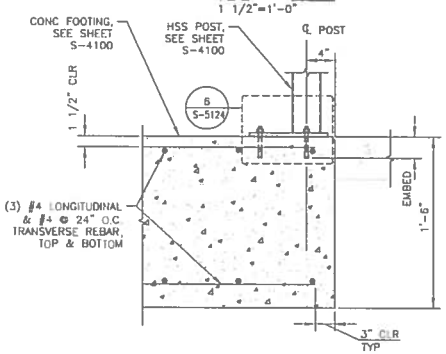

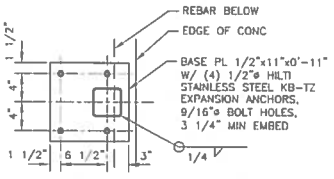

SECTION VIEW

4 S-4100 DETAIL
1 1/2"=1'-0"

5 S-4100 DETAIL
1 1/2"=1'-0"

6 S-5124 DETAIL
1 1/2"=1'-0"

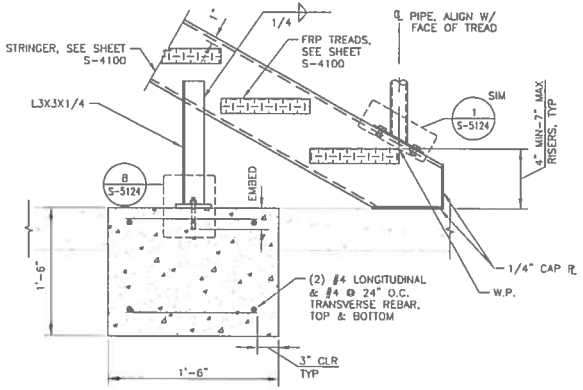

NOTE:
1. TREAD SEAT NOT SHOWN FOR CLARITY
2. 3/8" TOLERANCE WITHIN SINGLE FLIGHT BETWEEN LARGEST AND SMALLEST TREAD OR RISER

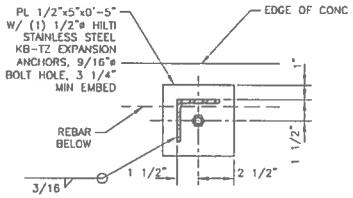

SECTION VIEW

8 S-5124 DETAIL
3"=1'-0"

7 S-4100 DETAIL
1 1/2"=1'-0"

NO	DATE	CLASS REV	ADC	DESCRIPTION	DWN	DES	CHKD	SUB	APP

AECOM

RLWTF-UP LOW LEVEL WASTE SUBPROJECT

STAIR DETAILS

BLDG. 230 TA-50

DRAWN	G.FLORES
DESIGN	D.LAKELROD
CHECKED	C.LANGENBECKER
DATE	05-08-14

SUBMITTED: MANNY TARIN
APPROVED FOR RELEASE: ED ARTIOLA

Los Alamos NATIONAL LABORATORY — PO Box 1663, Los Alamos, New Mexico 87545

SHEET S-5124
86 OF 434

CLASSIFICATION | REVIEWER | DATE

PROJECT ID 100761 | DRAWING NO C55864 | REV 0

JAMES M. WEEKS NEW MEXICO 11584 REGISTERED PROFESSIONAL ENGINEER
5/12/14

P:\TRID-EFS\ANL Eng Standards Unofficial Details Struct\ST-B10B1-3 unofficial.dgn, 04/13/12 @ 08:57 119113

121137

REINFORCING SPLICE AND EMBEDMENT SCHEDULE

BAR SIZE	EMBEDMENT & CLASS A SPLICE LENGTH	CLASS B SPLICE LENGTH	STD HOOK DEVELOPEMENT LENGTH
3	1'-7"	2'-1"	8"
4	2'-1"	2'-9"	10"
5	2'-7"	3'-5"	1'-0"
6	3'-1"	4'-1"	1'-3"
7	4'-6"	5'-11"	1'-5"
8	5'-2"	6'-9"	1'-7"
9	5'-10"	7'-7"	1'-10"
10	6'-7"	8'-6"	2'-1"

NOTES:

1. SPLICE LENGTHS ARE TYPICAL UNLESS OTHERWISE NOTED ON PLANS_AND DETAILS.
2. SPLICES SHALL BE STAGGERED AT LEAST 24".
3. FOR HORIZONTAL BARS WITH LESS THAN 12" OF FRESH CONCRETE CAST BELOW THE SPLICE OR EMBEDMENT. LENGTHS MAY BE REDUCED BY 30% OF THAT SHOWN.
4. TABLE IS BASED ON f'c = 4,000 PSI.
5. SPLICES ARE CLASS A, EXCEPT WHERE NOTED ON DRAWINGS.
6. SPLICE LOCATIONS WHERE REQUIRED ARE INDICATED ON DETAILS. ADDITIONAL SPLICES AS NEEDED FOR MEANS AND METHODS OF CONSTRUCTION BY CONTRACTOR.

FOUNDATION SCHEDULE

MARK	SIZE	DEPTH	TRANSVERSE REINFORCING	LONGITUDINAL REINFORCING	REMARKS
F1	3'-0" X CONT	1'-0"	#5 @ 12" O.C. BOTTOM	3 #5 BOTTOM	–
F2	4'-0" X CONT	1'-6"	#6 @ 12" O.C. BOTTOM	4 #6 BOTTOM	–
F3	4'-6" X CONT	1'-6"	#6 @ 12" O.C. BOTTOM	5 #6 BOTTOM	–
F4	7'-6" X CONT	2'-0"	#5 @ 24" O.C. TOP #7 @ 12" O.C. BOTTOM	3 #5 TOP 8 #7 BOTTOM	–
F5	8'-0" X CONT	2'-0"	#5 @ 24" O.C. TOP #7 @ 12" O.C. BOTTOM	4 #5 TOP 8 #7 BOTTOM	–

NO	DATE	CLASS REV	ADC	DESCRIPTION	DWN	DES	CHKD	SUB	APP

AECOM

RLWTF-UP LOW LEVEL WASTE SUBPROJECT

STRUCTURAL SCHEDULES

BLDG. 230 TA-50

DRAWN	G.FLORES
DESIGN	D.AXELROD
CHECKED	C.ROSENBERGER
DATE	05-06-14

SUBMITTED MANNY TARIN

APPROVED FOR RELEASE ED ARTIGLIA

Los Alamos NATIONAL LABORATORY PO Box 1663 Los Alamos, New Mexico 87545

SHEET S-7100

87 OF 434

CLASSIFICATION | REVIEWER | DATE

PROJECT ID 100761 | DRAWING NO C55864 | REV 0

JAMES M. WEEKS NEW MEXICO 11384 REGISTERED PROFESSIONAL ENGINEER

James M. Weeks 5/12/14

File Location: Y:\DOE PROJECTS\LANL\LANL RLWTF LLW\DRAFTING\MODEL\CADD II\MAIN\55864-S-7100.DWG
Plotted By: FLORES, GABRIEL Plot Date: Monday, May 12, 2014

12138

PENETRATION SCHEDULE

* DISTANCES ARE TO CENTER OF PENETRATION UNLESS NOTES OTHERWISE.

GENERAL LOCATION	PENETRATION SIZE	HORIZONTAL DISTANCE *	COLUMN LINE REFERENCE	ELEVATION *	SERVICE	COMMENT
NORTH WALL	33"Ø	11'-10"	EAST OF COL LINE 4	14'-0" ABOVE FF	MECH	–
	5"Ø	7'-8"	EAST OF COL LINE 3	11'-0" ABOVE FF	MECH	–
	4"Ø	9'-3"	EAST OF COL LINE 3	10'-11 1/2" ABOVE FF	MECH	–
	8"W X 16"H	38'-7"	EAST OF COL LINE 2	19'-2" ABOVE FF	MECH	BLOCK OUT
	29"W X 22"H	36'-3 1/2"	EAST OF COL LINE 2	18'-11" ABOVE FF	MECH	BLOCK OUT
	3"Ø	4'-0"	EAST OF COL LINE 3	12'-0" ABOVE FF	FIRE	SLEEVED
	1 1/4"Ø	8'-0"	WEST OF COL LINE 4	10'-0" ABOVE FF	ELEC	SLEEVED
	1 1/4"Ø	18'-4"	WEST OF COL LINE 5	10'-0" ABOVE FF	ELEC	SLEEVED
	3"Ø	1'-7 1/2"	WEST OF COL LINE 4	11'-10 13/32" ABOVE FF	MECH	–
	4"Ø	1'-8"	EAST OF COL LINE 3	11'-11 3/32" ABOVE FF	MECH	–
EAST WALL	12"W X 6"H	48'-6"	NORTH OF COL LINE A	17'-3" ABOVE FF	MECH	BLOCK OUT
	12"W X 12"H	39'-10"	NORTH OF COL LINE A	11'-10" ABOVE FF	MECH	BLOCK OUT
	3"Ø	6'-5"	NORTH OF COL LINE B	1'-0" ABOVE FF	FIRE	SLEEVED
	1 1/4"Ø	3'-4"	SOUTH OF COL LINE B	9'-6" ABOVE FF	ELEC	SLEEVED
	1 1/4"Ø	3'-9 1/2"	SOUTH OF COL LINE B	9'-6" ABOVE FF	ELEC	SLEEVED
	1 1/4"Ø	4'-3"	SOUTH OF COL LINE B	9'-6" ABOVE FF	ELEC	SLEEVED
	1 1/4"Ø	5'-2"	NORTH OF COL LINE A	14'-0" ABOVE FF	ELEC	SLEEVED
	2 1/2"Ø	4'-8"	NORTH OF COL LINE A	14'-0" ABOVE FF	ELEC	SLEEVED
	1 1/4"Ø	4'-2"	NORTH OF COL LINE A	14'-0" ABOVE FF	ELEC	SLEEVED
	1 1/4"Ø	3'-9 1/2"	NORTH OF COL LINE A	14'-0" ABOVE FF	ELEC	SLEEVED
	1 1/4"Ø	3'-2"	NORTH OF COL LINE A	14'-0" ABOVE FF	ELEC	SLEEVED
	1 1/4"Ø	2'-7 1/2"	NORTH OF COL LINE A	14'-0" ABOVE FF	ELEC	SLEEVED
SOUTH WALL	13"W X 13"H	23'-7"	EAST OF COL LINE 2	10'-5 1/2" ABOVE FF	MECH	–
	5"W X 2 1/2"H	6'-3"	EAST OF COL LINE 2	9'-6" ABOVE FF	MECH	BLOCK OUT
SOUTH WALL	5"W X 2 1/2"H	12'-3"	EAST OF COL LINE 2	9'-6" ABOVE FF	MECH	BLOCK OUT
	2"Ø	7'-0"	WEST OF COL LINE 5	10'-0" ABOVE FF	MECH	SLEEVED
	2"Ø	3'-2"	WEST OF COL LINE 5	10'-0" ABOVE FF	MECH	SLEEVED
	16"Ø	29'-8"	WEST OF COL LINE 5	6'-0 5/16" ABOVE FF	PROCESS	SLEEVED
	1 1/4"Ø	3'-1 1/2"	EAST OF COL LINE 2	10'-6" ABOVE FF	ELEC	SLEEVED
	1 1/4"Ø	2'-6"	EAST OF COL LINE 2	10'-6" ABOVE FF	ELEC	SLEEVED
WEST WALL	5"Ø	7'-10"	SOUTH OF COL LINE D	11'-0" ABOVE FF	MECH	–
	10"Ø	2'-8"	NORTH OF COL LINE C	12'-0" ABOVE FF	FIRE	SLEEVED
	3"Ø	17'-5"	NORTH OF COL LINE A	9'-10 1/4" ABOVE FF	FIRE	SLEEVED
	10"W X 20"H	2'-2"	SOUTH OF COL LINE B	13'-6" ABOVE FF	ELEC	SLEEVED
	1 1/4"Ø	2'-2"	SOUTH OF COL LINE D	10'-0" ABOVE FF	ELEC	SLEEVED
	1 1/4"Ø	2'-7 1/2"	SOUTH OF COL LINE D	10'-0" ABOVE FF	ELEC	SLEEVED
	1 1/4"Ø	3'-3"	SOUTH OF COL LINE D	10'-0" ABOVE FF	ELEC	SLEEVED
	1 1/4"Ø	6'-0"	SOUTH OF COL LINE C	10'-0" ABOVE FF	ELEC	SLEEVED
	1 1/4"Ø	13'-4"	NORTH OF COL LINE A	4'-0" ABOVE FF	ELEC	SLEEVED
	1 1/4"Ø	21'-6"	NORTH OF COL LINE A	4'-0" ABOVE FF	ELEC	SLEEVED
	–	–	–	–	–	–
RATED WALL	19"Ø	40'-9 7/16"	EAST OF COL LINE 2	10'-0" ABOVE FF	MECH	–
	27"W X 27"H	12'-11 7/8"	WEST OF COL LINE 5	18'-9" ABOVE FF	MECH	–
	36"W X 12"H	1'-4 1/2"	EAST OF COL LINE 4	12'-10" ABOVE FF	MECH/FIRE	BLOCK OUT
	3"Ø	10'-2 11/16"	EAST OF COL LINE 4	12'-5 1/2" ABOVE FF	MECH	SLEEVED
	9"W X 4"H	7'-7"	WEST OF COL LINE 5	9'-5 1/4" ABOVE FF	MECH	BLOCK OUT
	4'-0"W X 3'-0"H	–	BETWEEN COL LINES 3 & 4	–	WINDOW	–
	4'-0"W X 3'-0"H	–	BETWEEN COL LINES 3 & 4	–	WINDOW	–

PENETRATION SCHEDULE
CONTINUES ON SHEET
S-7102

JAMES W. WEEKS
NEW MEXICO
11384
REGISTERED PROFESSIONAL ENGINEER
5/12/14

NO	DATE	CLASS REV	ADC	DESCRIPTION	DWN	DES	CHKD	SUB	APP

AECOM

RLWTF-UP LOW LEVEL WASTE SUBPROJECT

STRUCTURAL SCHEDULES

BLDG. 230 TA-50

SUBMITTED MAMMY TARIN

APPROVED FOR RELEASE ED ARTIGLIA

Los Alamos NATIONAL LABORATORY PO Box 1663 Los Alamos, New Mexico 87545

DRAWN	G.FLORES
DES	D.AKELROD
CHECKED	C.GREENBERGER
DATE	05-06-14
SHEET	S-7101
	88 OF 434
CLASSIFICATION	
REVIEWER	
DATE	
PROJECT ID	100761
DRAWING NO	C55864
REV	0

65121
File: \\cds\store1\LANL PROJECTS\LANL RLWTF LL\CRAFTING\MODEL\CAD2 DWANN\55864-S-7101.DWG
Plotted By: FLORES, GABRIEL Plot Date: Monday, May 12, 2014

PENETRATION SCHEDULE CONTINUED

* DISTANCES ARE TO CENTER OF PENETRATION UNLESS NOTES OTHERWISE.

GENERAL LOCATION	PENETRATION SIZE	HORIZONTAL DISTANCE *	COLUMN LINE REFERENCE	ELEVATION *	SERVICE	COMMENT
RATED WALL	–	–	–	–	–	–
	16"Ø	29'-8"	WEST OF COL LINE 5	4'-2 3/8" ABOVE FF	PROCESS	SLEEVED
	2 1/2"Ø	6'-6"	EAST OF COL LINE 2	9'-2" ABOVE FF	ELEC	SLEEVED
	4"Ø	7'-1"	EAST OF COL LINE 2	9'-2" ABOVE FF	ELEC	SLEEVED
	4"Ø	7'-8"	EAST OF COL LINE 2	9'-2" ABOVE FF	ELEC	SLEEVED
	2 1/2"Ø	8'-3"	EAST OF COL LINE 2	9'-2" ABOVE FF	ELEC	SLEEVED
	1 1/4"Ø	8'-9"	EAST OF COL LINE 2	9'-2" ABOVE FF	ELEC	SLEEVED
	1 1/4"Ø	11'-7 1/2"	EAST OF COL LINE 2	9'-10" ABOVE FF	ELEC	SLEEVED
	1 1/4"Ø	12'-2"	EAST OF COL LINE 2	9'-10" ABOVE FF	ELEC	SLEEVED
	1 1/4"Ø	12'-2"	EAST OF COL LINE 2	9'-2" ABOVE FF	ELEC	SLEEVED
	2 1/2"Ø	9'-0"	EAST OF COL LINE 3	9'-10" ABOVE FF	ELEC	SLEEVED
	2 1/2"Ø	8'-5"	EAST OF COL LINE 3	9'-10" ABOVE FF	ELEC	SLEEVED
	2 1/2"Ø	7'-10"	EAST OF COL LINE 3	9'-10" ABOVE FF	ELEC	SLEEVED
	2 1/2"Ø	7'-3"	EAST OF COL LINE 3	9'-10" ABOVE FF	ELEC	SLEEVED
	1 1/4"Ø	15'-6"	EAST OF COL LINE 3	9'-10" ABOVE FF	ELEC	SLEEVED
FIRE RISER ROOM–NORTH WALL	6"W X 2 1/2"H	1'-3"	WEST OF COL LINE 2	9'-0" ABOVE FF	MECH	BLOCK OUT
	12"Ø	6'-1 1/2"	WEST OF COL LINE 2	0'-11" ABOVE FF	FIRE	SLEEVED
	1 1/4"Ø	0'-6"	WEST OF COL LINE 2	14'-0" ABOVE FF	ELEC	SLEEVED
FIRE RISER ROOM–SOUTH WALL	1 1/4"Ø	0'-6"	WEST OF COL LINE 2	14'-0" ABOVE FF	ELEC	SLEEVED
	1 1/4"Ø	0'-6"	WEST OF COL LINE 2	13'-6 1/2" ABOVE FF	ELEC	SLEEVED
	1 1/4"Ø	0'-6"	WEST OF COL LINE 2	13'-1" ABOVE FF	ELEC	SLEEVED
	1 1/4"Ø	0'-6"	WEST OF COL LINE 2	12'-7 1/2" ABOVE FF	ELEC	SLEEVED
FIRE RISER ROOM–WEST WALL	8"Ø	2'-8"	NORTH OF COL LINE C	4'-0" ABOVE FF	FIRE	SLEEVED
	8"Ø	4'-4 1/2"	NORTH OF COL LINE C	4'-0" ABOVE FF	FIRE	SLEEVED
	4"Ø	1'-3"	NORTH OF COL LINE C	1'-2 1/8" ABOVE FF	FIRE	SLEEVED
	1 1/2"Ø	1'-3"	NORTH OF COL LINE C	7'-0" ABOVE FF	FIRE	SLEEVED

GENERAL LOCATION	PENETRATION SIZE	HORIZONTAL DISTANCE *	COLUMN LINE REFERENCE	ELEVATION *	SERVICE	COMMENT
VACUUM PUMP ROOM–SOUTH WALL	3"Ø	1'-7 1/2"	WEST OF COL LINE 4	11'-10 13/32" ABOVE FF	MECH	–
	4"Ø	1'-8"	EAST OF COL LINE 3	11'-11 3/32" ABOVE FF	MECH	–
VACUUM PUMP ROOM–EAST WALL	1 1/4"Ø	0'-4"	NORTH OF COL LINE E	14'-0" ABOVE FF	ELEC	SLEEVED
	1 1/4"Ø	0'-4"	NORTH OF COL LINE E	13'-6 1/2" ABOVE FF	ELEC	SLEEVED
	1 1/4"Ø	0'-4"	NORTH OF COL LINE E	13'-1" ABOVE FF	ELEC	SLEEVED
	1 1/4"Ø	0'-4"	NORTH OF COL LINE E	12'-7 1/2" ABOVE FF	ELEC	SLEEVED
VACUUM PUMP ROOM–WEST WALL	5"W X 2 1/2"H	0'-4"	NORTH OF COL LINE E	9'-0" ABOVE FF	MECH	BLOCK OUT
	1 1/4"Ø	0'-4"	NORTH OF COL LINE E	14'-0" ABOVE FF	ELEC	SLEEVED
	1 1/4"Ø	0'-4"	NORTH OF COL LINE E	13'-6 1/2" ABOVE FF	ELEC	SLEEVED
	1 1/4"Ø	0'-4"	NORTH OF COL LINE E	13'-1" ABOVE FF	ELEC	SLEEVED
	1 1/4"Ø	0'-4"	NORTH OF COL LINE E	12'-7 1/2" ABOVE FF	ELEC	SLEEVED
PROCESS AREA–ROOF	4"Ø	18'-5 1/2"	EAST OF COL LINE 4	–	MECH	BLOCK OUT
		1'-8"	NORTH OF COL LINE C			
	4"Ø	20'-1 1/2"	EAST OF COL LINE 4	–	MECH	BLOCK OUT
		1'-8"	NORTH OF COL LINE C			
	4"Ø	15'-10 1/2"	WEST OF COL LINE 4	–	MECH	BLOCK OUT
		1'-8"	NORTH OF COL LINE C			
	4"Ø	17'-6 1/2"	WEST OF COL LINE 4	–	MECH	BLOCK OUT
		1'-8"	NORTH OF COL LINE C			
SUPPORT AREA–ROOF	21"W X 21"H	11'-3 1/16"	EAST OF COL LINE 2	–	MECH	BLOCK OUT
		10'-1 1/8"	SOUTH OF COL LINE B			
	17"W X 17"H	4'-0"	WEST OF COL LINE 3	–	MECH	BLOCK OUT
		12'-11"	SOUTH OF COL LINE B			
	4"Ø	12'-5 5/8"	EAST OF COL LINE 4	–	MECH	BLOCK OUT
		20'-6 3/4"	NORTH OF COL LINE A			
	4"Ø	14'-1 5/8"	EAST OF COL LINE 4	–	MECH	BLOCK OUT
		20'-6 3/4"	NORTH OF COL LINE A			
	4"Ø	9'-10 5/8"	WEST OF COL LINE 4	–	MECH	BLOCK OUT
		20'-6 3/4"	NORTH OF COL LINE A			
	4"Ø	11'-6 5/8"	WEST OF COL LINE 4	–	MECH	BLOCK OUT
		20'-6 3/4"	NORTH OF COL LINE A			

NO	DATE	CLASS REV	ADC	DESCRIPTION	DWN	DES	CHKD	SUB	APP

AECOM

RLWTF–UP LOW LEVEL WASTE SUBPROJECT

STRUCTURAL SCHEDULES

BLDG. 230 TA-50

SUBMITTED MANNY TARIN

APPROVED FOR RELEASE ED ARTIOLIA

Los Alamos NATIONAL LABORATORY PO Box 1663 Los Alamos, New Mexico 87545

DRAWN	G.FLORES
DESIGN	D.AXELROD
CHECKED	C.ROSENBERGER
DATE	05-06-14

SHEET S-7102

89 OF 434

CLASSIFICATION REVIEWER DATE

PROJECT ID 100761 DRAWING NO C55864 REV 0

JAMES M. WREN NEW MEXICO 11364 REGISTERED PROFESSIONAL ENGINEER 5/12/14

DATE:

File Location: T:\UDE PROJECTS\LANL\LANL RLWTF LL\V3\DRAFTING\MODEL\C4123 11\MAIN\S3864-S-7102.DWG
Plotted By: FLORES, GABRIEL Plot Date: Monday, May 12, 2014

PROJECT DESIGN DATA

OCCUPANCY CLASSIFICATION — IBC 2009 / NFPA-101 2009

RLWTF PROCESS AREA MIXED OCCUPANCY	H-4	GENERAL INDUSTRIAL ORDINARY HAZARD
RLWTF ADMINISTRATIVE AREA MIXED OCCUPANCY	F-1	GENERAL INDUSTRIAL ORDINARY HAZARD

CONSTRUCTION TYPE

230-LLW TREATMENT BUILDING	II-B	II (000)

FLOOR AREA - ACTUAL VS ALLOWABLE

RLWTF TREATMENT BLDG 230

H-4 AREA	3,435 SF
F-1 AREA	3,247 SF
TOTAL GROSS AREA	6,682 SF
BASE ALLOWABLE AREA	33,000 SF

SPRINKLERS USED FOR 1 HR FIRE RESISTIVE CONSTRUCTION	N/A
CORRIDOR RATINGS	UNRATED
SPRINKLER CORRIDOR RATING SUBSTITUTION	NO
HAZARD CLASSIFICATION	LESS THAN HAZ CAT 3
PERFORMANCE CATEGORY	PC-1
SEISMIC CATEGORY	SITE CLASS D

STATE OF NEW MEXICO
Richard W. Kaselow
5-14-2014
NO. 2648
PROFESSIONAL ARCHITECT

NO	DATE	CLASS REV	ADC	DESCRIPTION	DWN	DES	CHKD	SUB	APP

AECOM

RLWTF-UP LOW LEVEL WASTE SUBPROJECT

PROJECT DESIGN DATA

DRAWN	T. VUET
DESIGN	T. LEACH
CHECKED	R. KASELOW
DATE	5/8/14

BLDG. 230 TA-50

SUBMITTED: MANNY TARIN

APPROVED FOR RELEASE: ED ARTIGLIA

Los Alamos NATIONAL LABORATORY — PO Box 1663, Los Alamos, New Mexico 87545

SHEET: A-0001

90 OF 434

CLASSIFICATION | REVIEWER | DATE

PROJECT ID: 100761

DRAWING NO: C55864

REV: 0

Plotted By: BROWN, DARLING Plot Date: Tuesday, May 06, 2014 Plot CTB File: LMLLCTB Page Setup Name: —— Initials: 1 1:1Scale: 1.000000 Measurements: IN
File: Locs:\Work PA_TECH\NLDD\TA50\C55901 - RLWTF\230 CAD\230 CAD SHEETS\VMEDIA\LLV FACILITY\A\SHEET\C55864-A-0001-R0.DWG

11211

LEGEND (NOT ALL SYMBOLS WILL APPLY TO THIS PROJECT)

- 8'-0" — DIMENSION LINE WITH WITNESS LINES AND DIMENSION
- CENTER LINE
- LEADER LINE
- FUTURE CONSTRUCTION
- EXISTING CONSTRUCTION
- NEW CONSTRUCTION
- BACKGROUND, NEW CONST.
- HIDDEN LINE
- MATCH LINE
- 1 HOUR FIRE RATED WALL
- FIRE OCCUPANCY SEPARATION WALL

} FIRE RATED SEPARATIONS SHOWN ON LIFE SAFETY PLAN: A-1000

IBC/NFPA101 TRAVEL DISTANCE TO COMMON PATH OF TRAVEL AND AN EXIT

PATH NUMBER (2) — START POINT — END OF COMMON PATH OF TRAVEL — POINT OF EXIT

DOE--STD-1066 TRAVEL DISTANCE TO EXIT OR NON-RAD HVAC AIR ZONE

PATH NUMBER (1) — START POINT — POINT OF EXIT

SECTION CUT: A / A-3000 — SECTION LETTER; SHEET NUMBER WHERE SECTION IS DRAWN; ARROWS INDICATE DIRECTION OF CUT

DETAIL CALLOUT: 1 / A-5000 — DETAIL NUMBER; SHEET NUMBER WHERE DETAIL IS DRAWN
- WHERE DETAIL IS A LARGER SCALE VIEW OF THE DRAWING SHOWN, (E.G., DETAIL OR ENLARGED PLAN) BUBBLE INDICATES ENLARGED AREA
- WHERE DETAIL IS AT 90° TO VIEW (E.G., A DETAIL SECTION VIEW), ARROW INDICATES DIRECTION OF CUT (NS)

INTERIOR ELEVATION CALLOUT: A / A-2000 — ELEVATION IDENTIFIER; FILLED AREA SHOWS DIRECTION; SHEET NUMBER WHERE ELEVATION IS DRAWN

NORTH ARROW — PLAN NORTH — TRUE NORTH

PLAN TITLES — PLANS — 0' 1' 2' 4' 8' 8' — 1/4"=1'-0" — SCALE

SECTION, DETAIL & INTERIOR ELEVATION TITLES: 1 / A-1000 — SECTION LETTER / DETAIL NUMBER / ELEVATION LETTER; SHEET NO FROM WHICH DRAWING IS CALLED.
SECTIONS - DETAILS — 0' 1' 2' 4' 8' 8' — 1/4"=1'-0" — SCALE

EXTERIOR ELEVATION TITLES
NORTH ELEVATION — 0' 1' 2' 4' 8' 8' — 1/4"=1'-0" — SCALE

- ROOM NAME & NUMBER (NAME / 100)
- DOOR NUMBER (NS) (100)
- WINDOW NUMBER (100)
- COLUMN LINE GRIDS (A / 1)
- KEYED NOTE (1)
- TOILET, SHOWER & MISC ACCESSORIES SPEC 10-2800 (NS) (WT)
- WALL TAG (SEE SHEET A-7101) (A)
- STAIR RUN (NS)
- FLOOR SLOPE ARROW (POINTS DOWN,)
- ELEVATION RELATIVE TO LOWER LEVEL FF=100'-0" (100'-00")
- ELEVATION OF FLOOR TOPPING ABOVE DATUM (1")
- HAND AND FOOT MONITOR (NS)
- PERSONNEL CONTAMINATION MONITOR (NS) (PCM)
- HAMPERS (NS)
- ROOF DRAIN & OVERFLOW
- LIGHTS
- EMERGENCY LIGHTS
- HVAC DIFFUSER (NS) — SUPPLY — RETURN/EXHAUST
- ACCESS PANEL
- FIRE SPRINKLER HEAD (NS)
- SIDEWALL FIRE SPRINKLER HEAD (NS)
- BOLLARD (NS)
- FIRE EXTINGUISHER
- FIRE FLOW DRAIN
- EXIT SIGN
- CONCRETE
- EARTH
- PRE-FINISHED METAL ROOF
- CABLE TRAY
- CEILING GRID

ABBREVIATIONS (NOT ALL SYMBOLS WILL APPLY TO THIS PROJECT)

ADA	AMERICANS WITH DISABILITIES ACT
ADMIN	ADMINISTRATION
AFF	ABOVE FINISHED FLOOR
AL	ALUMINUM
BRD	BOARD
BLDG	BUILDING
BOT	BOTTOM
BS	BOTH SIDES
CL ℄	CENTERLINE
CLG	CEILING
CUB	CENTRAL UTILITY BUILDING
CHEM	CHEMICAL
CJ	CONSTRUCTION JOINT
CLR	CLEAR
CMU	CONCRETE MASONRY UNIT
COL	COLUMN
COMM	COMMUNICATIONS
CONC	CONCRETE
CONT	CONTINUOUS
CSPE	SINGLE PLY CHLOROSULFONATE-POLYETHYLENE
DBL	DOUBLE
DIA, ⌀	DIAMETER
DIM	DIMENSION
DN	DOWN
DRE	DOOR ROLL-UP ELECTRICAL
DRU	DOOR ROLL-UP MANUAL
EA	EACH
EF	EACH FACE
EJ	EXPANSION JOINT
ELEC	ELECTRIC, ELECTRICAL
ELEV	ELEVATION
EQUIP	EQUIPMENT
EXP	EXPANSION
ES	EACH SIDE
EW	EACH WAY
EWC	ELECTRIC WATER COOLER
EXP	EXPANSION JOINT
FD	FLOOR DRAIN
FE	FIRE EXTINGUISHER
FEC	FIRE EXTINGUISHER CABINET
FF	FINISH FLOOR
FG	FINISH GRADE
FIN	FINISH
FOC	FACE OF CONCRETE
FOS	FACE OF STUD
FR	FRAME
FRG	FIRE RESISTIVE GLAZING (NOT WIRE)
GA	GAUGE
GB	GRAB BAR
GFE	GOVERNMENT FURNISHED EQUIPMENT
GYP BD	GYPSUM BOARD
HDWR, HW	HARDWARE
HFM	HAND AND FOOT MONITOR
HM	HOLLOW METAL
HORIZ	HORIZONTAL
HR	HOUR
HT	HEIGHT
HVAC	HEATING, VENTILATING AND AIR CONDITIONING
HW	HARDWARE
IBC	INTERNATIONAL BUILDING CODE (2009)
INSUL	INSULATION
JAN	JANITOR('S)
L	ANGLE
LAB	LABORATORY
LAV	LAVATORY
LSC	LIFE SAFETY CODE (NFPA-101, 2009)
MATL	MATERIAL
MAX	MAXIMUM
MECH	MECHANICAL
METL	METAL
MIN	MINIMUM, MINUTE
MISC	MISCELLANEOUS
MO	MASONRY OPENING
MTD	MOUNTED
NFPA	NATIONAL FIRE PROTECTION ASSOCIATION
NIC	NOT IN CONTRACT
NO/#	NUMBER
NOM	NOMINAL
NTS	NOT TO SCALE
OC	ON CENTER
OD	OUTSIDE DIAMETER / OVERFLOW DRAIN
OH	OPPOSITE HAND
OHM	OCCUPATIONAL HEALTH MONITORING
OPS	OPERATIONS
PCM	PERSONNEL CONTAMINATION MONITOR, PERSONNEL CONTAMINATION MONITORING
PL	PLATE
PLAM	PLASTIC LAMINATE
PS	PULL STATION
R	RISER
RAD	RADIUS
RD	ROOF DRAIN
REINF	REINFORCING
REQD	REQUIRED
RM	ROOM
REQD	REQUIRED
RO	ROUGH OPENING
RWL	RAIN WATER LEADER
SC	SOLID CORE
SCHED	SCHEDULE
SIM	SIMILAR
STL	STEEL
SPEC	SPECIFICATION
SQ	SQUARE
SS	STAINLESS STEEL
STD	STANDARD
STOR	STORAGE
STRUC	STRUCTURE, STRUCTURAL
T	TREAD
THK	THICK, THICKNESS
TOC	TOP OF CONCRETE
TOS	TOP OF STEEL
TOW	TOP OF WALL
TRU	TRANSURANIC
TS	TUBE STEEL
TYP	TYPICAL
UON	UNLESS OTHERWISE NOTED
VERT	VERTICAL
W/	WITH
W/O	WITHOUT
WC	WATER CLOSET
WT	WEIGHT

LEGEND (CONTINUED)

OCCUPANCY SEPARATION / HAZARD SEPARATION LINE

SHOWN ONLY ON OCCUPANCY LOAD PLANS: A-1101

FIRE RATED SEPARATIONS SHOWN ON LIFE SAFETY PLANS: A-1100

OCCUPANCY SEPARATION — F-1 | H-4

STATE OF NEW MEXICO — Richard W. Kasslow — 5-14-2014 — NO. 2648 — REGISTERED ARCHITECT

NO	DATE	CLASS REV	ADC	DESCRIPTION	DRN	DES	CHKD	SUB	APP

AECOM

RLWTF-UP LOW LEVEL WASTE SUBPROJECT

SYMBOL LEGEND AND ABBREVIATIONS

DRAWN	T. VUET
DESIGN	T. LEACH
CHECKED	R. KASELOW
DATE	5/8/14

BLDG. 230 TA-50

SUBMITTED: MANNY TARIN — APPROVED FOR RELEASE: ED ARTIOLA

Los Alamos NATIONAL LABORATORY — PO Box 1663, Los Alamos, New Mexico 87545

SHEET A-0002 — 91 OF 434

CLASSIFICATION | REVIEWER | DATE

PROJECT ID 100761 — DRAWING NO C55864 — REV 0

File: Locs/Work PA_TECHNOLOGY\ARCH\RWTF - RLWTF-1230 CAD\1302 CAD DIRECTORY\ACCFULLY FACILITY\A\SHEET\C55864-A-0002-R0.DWG
Plotted by: BROWN, DARLENE Plot Date: Tuesday, May 06, 2014 Plot CTB File: UNLOTB Page Setup Name: —— Initials: ½ LTScale 1.00 Measurement: IN
2014 12

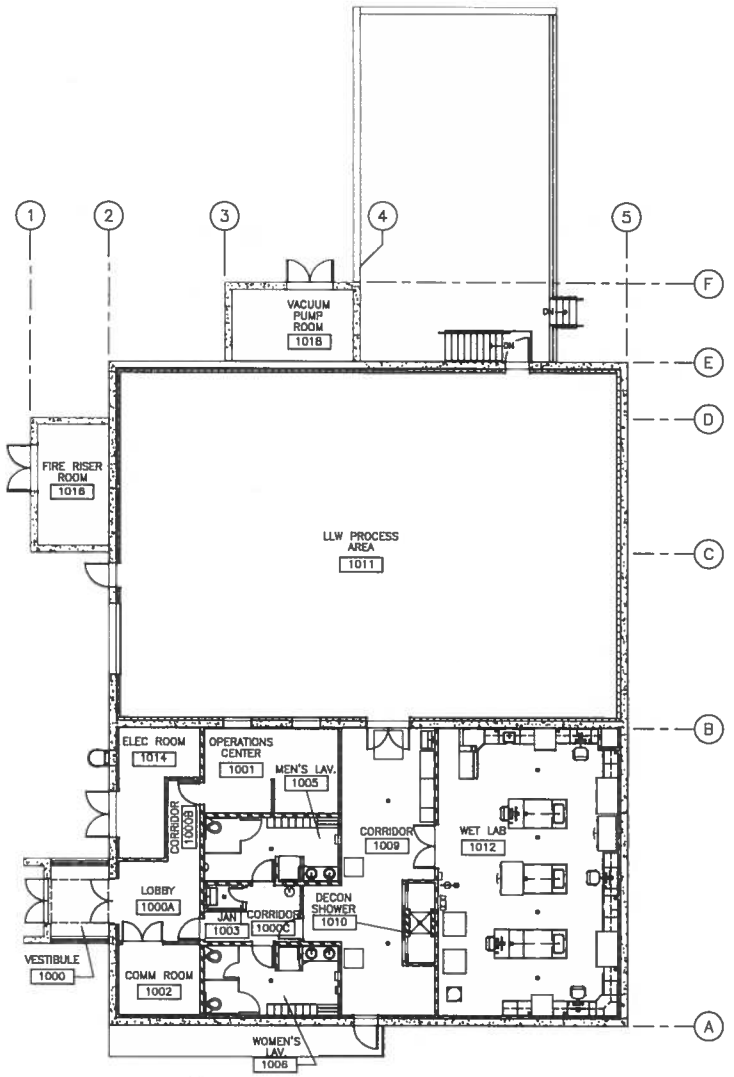

FLOOR PLAN OF RECORD

1/8"=1'-0"

GENERAL NOTES

1. IF THIS SHEET IS NOT 24" X 36", THEN IT IS A REDUCED SIZE PLOT. USE GRAPHIC SCALE ACCORDINGLY.
2. GROSS MEASURED AREA SHALL MEAN THE TOTAL AREA OF A BUILDING ENCLOSED BY THE DOMINANT PORTION, EXCLUDING PARKING AREAS AND LOADING DOCKS (OR PORTION OF SAME) OUTSIDE THE BUILDING. CALCULATED ON A FLOOR BY FLOOR BASIS.
3. GROSS BUILDING AREA SHALL MEAN THE TOTAL CONSTRUCTED AREA OF A BUILDING.

ROOM NAME	ROOM NUMBER	ROOM AREA
VESTIBULE	1000	82 SF
LOBBY	1000A	128 SF
CORRIDOR	1000B	54 SF
CORRIDOR	1000C	86 SF
OPERATIONS CENTER	1001	202 SF
COMM ROOM	1002	113 SF
JANITORS CLOSET	1003	19 SF
MEN'S LAV.	1005	180 SF
WOMEN'S LAV.	1006	182 SF
CORRIDOR	1009	523 SF
DECON SHOWER	1010	47 SF
LLW PROCESS AREA	1011	3433 SF
WET LAB	1012	1013 SF
ELECTRICAL ROOM	1014	148 SF
FIRE RISER ROOM	1016	170 SF
VACUUM PUMP ROOM	1018	170 SF
TOTAL NET AREA		6,550 SF
TOTAL GROSS MEASURED AREA		6,682 SF
TOTAL GROSS BUILDING AREA		7,324 SF

"PRIORITY DRAWING"

NO	DATE	CLASS REV	ADC	DESCRIPTION	DWN	DES	CHKD	SUB	APP

AECOM

RLWTF-UP LOW LEVEL WASTE SUBPROJECT

FLOOR PLAN OF RECORD

DRAWN T. VUET
DESIGN T. LEACH
CHECKED R. KASELOW
DATE 5/8/14

BLDG. 230 TA-50

SUBMITTED MANNY TARIN

APPROVED FOR RELEASE ED ARTIOLA

Los Alamos NATIONAL LABORATORY PO Box 1663 Los Alamos, New Mexico 87545

SHEET A-1001

92 OF 434

CLASSIFICATION REVIEWER DATE

PROJECT ID 100761 DRAWING NO C55864 REV 0

STATE OF NEW MEXICO Richard W. Kaselow 5-14-2014 NO. 2648 REGISTERED ARCHITECT

Plotted By: BRENNA BIELING Plot Date: Tuesday, May 06, 2014 Plot CTB File: UNLATB Page Setup Name: ---; Initials: tj; LScale: 1.000000 Measurement: ft;
File: Locs:\Serv PA_TECHNOLOGY\A229903 - RLWTF\309 CAD\DRS CAD SHEETS\TYCADFALLV FACILITY\A\SHEETS\C55864-A-1001-RELEVG

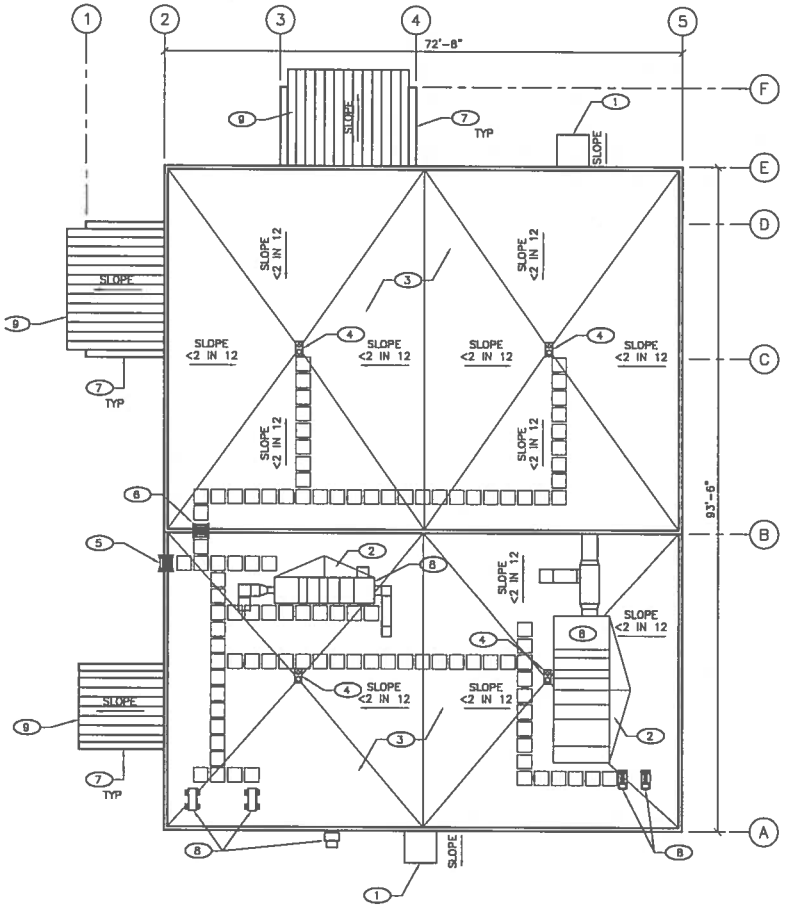

ROOF PLAN OF RECORD

1/8"=1'-0"

GENERAL NOTES

1. IF THIS SHEET IS NOT 24" X 36", THEN IT IS A REDUCED SIZE PLOT. USE GRAPHIC SCALE ACCORDINGLY.

KEYED NOTES

1. AWNING OVER EXIT DOOR
2. ROOF CRICKET AT MECHANICAL EQUIPMENT
3. CHLOROSULFONATE–POLYETHYLENE ROOFING (CSPE) FULLY ADHERED
4. ROOF DRAIN AND OVERFLOW
5. ROOF LADDER – SEE SHEET A–5103
6. ROOF LADDER – SEE SHEET A–5103
7. PARAPET WALLS
8. MECHANICAL EQUIPMENT
9. METAL ROOF

"PRIORITY DRAWING"

NO	DATE	CLASS REV	ADC	DESCRIPTION	DWN	DES	CHKD	SUB	APP

ACOM

RLWTF–UP LOW LEVEL WASTE SUBPROJECT

ROOF PLAN OF RECORD

BLDG. 230 TA–50

DRAWN	T. VIJET
DESIGN	T. LEACH
CHECKED	R. KASELOW
DATE	5/8/14

SUBMITTED: MANNY TARIN

APPROVED FOR RELEASE: ED ARTIOLA

STATE OF NEW MEXICO — Richard W. Kaselow — NO. 2648 — REGISTERED ARCHITECT

Los Alamos NATIONAL LABORATORY — PO Box 1663, Los Alamos, New Mexico 87545

SHEET A–1002

93 OF 434

CLASSIFICATION | REVIEWER | DATE

PROJECT ID 100761 | DRAWING NO C55864 | REV 0

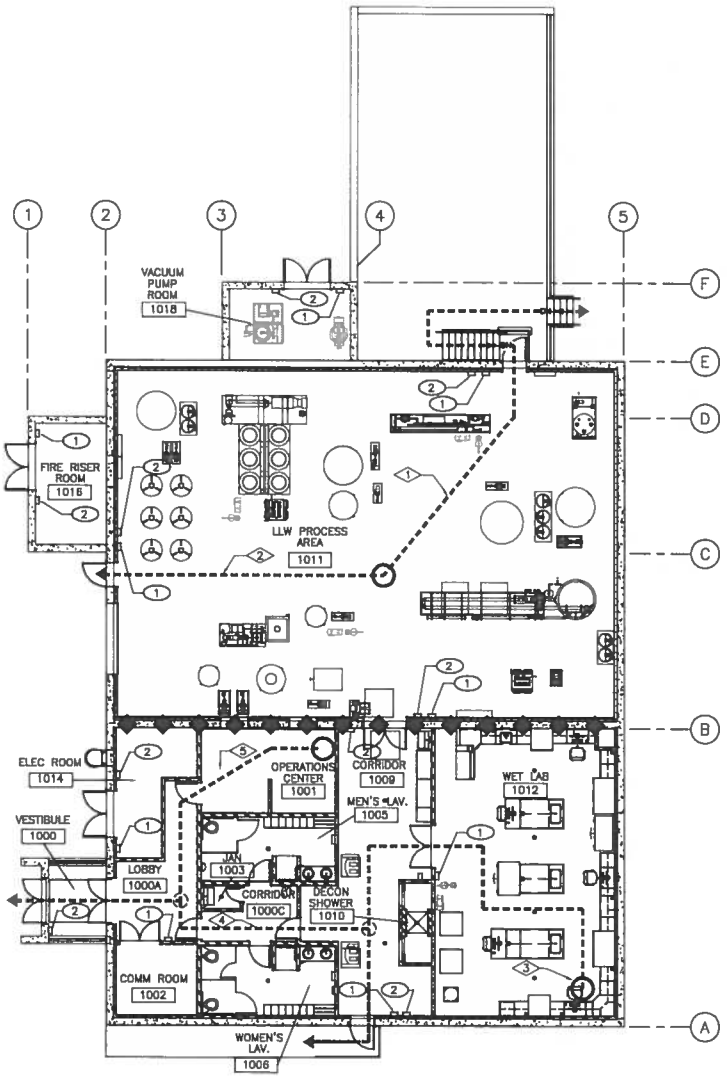

LIFE SAFETY PLAN

1/8"=1'-0"

GENERAL NOTES

1. IF THIS SHEET IS NOT 24"x 36", THEN IT IS A REDUCED SIZE PLOT. USE GRAPHIC SCALE ACCORDINGLY.
2. EGRESS PATHS START AT 1'-0" FROM THE MOST DISTANT POINT TO THE NEAREST EXIT. WHERE THERE ARE MULTIPLE EXITS, THE MOST DISTANT POINT MAY BE NEAR THE CENTER OF THE SPACE.
3. OPENINGS IN FIRE RATED CONSTRUCTION WILL BE PROVIDED WITH APPROPRIATE FIRE RATED ASSEMBLIES.
4. PROVIDE A MINIMUM HEADROOM OF 80 INCHES (6'-8") AND MINIMUM WIDTH OF 36" (3'-0") FOR ALL EGRESS PATHS IN PROCESS AREA.

KEYED NOTES

(1) FIRE EXTINGUISHER CABINET

(2) PULL STATION

EGRESS PATHS

DOE-STD-1066 75' TOTAL PATH LIMIT TO EXIT NON-RAD HVAC ZONE

PATH**	MAX TOTAL PATH	ACTUAL TOTAL PATH	TO
1	175'-0"	77'-0"	EXIT (EXTERIOR OF BLDG)
2	175'-0"	39'-0"	EXIT (EXTERIOR OF BLDG)
3	250'-0"	85'-0"	EXIT (EXTERIOR OF BLDG)
4	250'-0"	58'-0"	EXIT (EXTERIOR OF BLDG)
5	250'-0"	59'-0"	EXIT (EXTERIOR OF BLDG)

2009 IBC CHAPTER 29 PLUMBING SYSTEMS TABLE 2902.1

PLUMBING FIXTURE COUNT

32 MEN OCCUPANTS										32 WOMEN OCCUPANTS									
HA-WC		HA-LAV		UR		WC		LAV		SH		HA-WC		HA-LAV		WC		LAV		SH	
REQU.	PROV.	REQU.	PROV.	REQU.	PROV.	N/A	N/A	REQU.	PROV.	REQU.	PROV.	REQU.	PROV.	REQU.	PROV.	REQU.	PROV.	REQU.	PROV.	REQU.	PROV.
1	1	1	1	1	1	0	0	1	1	1	1	1	1	1	1	1	1	1	1	1	1

LEGEND: HA – HANDICAPPED ACCESSIBLE; DF – DRINKING FOUNTAIN; LAV – LAVATORY; UR – URINAL; WC – WATER CLOSET; SS – SANITARY SINK; SH – SHOWER

TREATMENT FACILITY DESIGN DATA			
HAZARD CLASSIFICATION	LESS THAN HAZCAT-3		
SEISMIC DESIGN CATEGORY	SITE CLASS D		
CONSTRUCTION TYPES			
IBC – 2009	SECTION 602		II-B
NFPA – 2009	TABLE 4.1.1		II (000)
OCCUPANCY TYPES			
	IBC	302	H-4: HIGH HAZARD PROCESS AREA CONTAINS TOXIC AND CORROSIVE MATERIAL IN AN OPEN SYSTEM
			F-1: MODERATE HAZARD LABORATORY AND SUPPORT AREA
	NFPA 101	6.1.12 & 40.1.4	GENERAL INDUSTRIAL-ORDINARY HAZARD
OCCUPANCY SEPARATIONS			
H-4 TO F-1	IBC	508.3.2.3 EX 508.4	1HR
FLOOR AREA: ALLOWABLE (SF)			
BASE AREA	IBC	TABLE 503	H-4 IN II-B – 17,500
INCREASES			F-1 IN II-B – 15,500
FRONTAGE, SPRINKLERS & STORIES	506.1,506.3		NOT NEEDED TO MEET REQU.
OCCUPANCY LOAD			
NET AREA IN SF	IBC	TABLE 1004.1.1	
ACCESS STORAGE AREAS, MECHANICAL EQUIPMENT ROOM		300 SF/ PER OCC.	805 SF — 2
BUSINESS AREA		100 SF/ PER OCC.	2,842 SF — 27
FACTORY AND INDUSTRIAL AREAS		100 SF/ PER OCC.	3,435 SF — 35
TOTAL OCCUPANTS			64
TRAVEL DISTANCES			
SPRINKLERED			YES
TOTAL TRAVEL DISTANCE (FT)			
F-1	IBC	TABLE 1016.1	250 FT
H-4	IBC	TABLE 1016.1	175 FT
GENERAL INDUSTRIAL	NFPA	TABLE A-7.8	250 FT
COMMON PATH OF TRAVEL (FT)			
F-1	IBC	1014.3 EX 1	100 FT
H-4	IBC	1014.3	75 FT
GENERAL INDUSTRIAL	NFPA	TABLE A-7.8	100 FT
DEAD END CORRIDORS			
F-1	IBC	1017.3 EX 2	50 FT
H-4	IBC	1017.3	20 FT
GENERAL INDUSTRIAL	NFPA	TABLE A-7.8	50 FT
FIRE SEPARATIONS (HRS)			
H-4 TO F-1			1 HR
ROOF / CEILING RATING			N/R
FLOOR / CEILING RATING			N/R
EXTERIOR WALL			N/R
SPRINKLERS USED FOR 1 HR RESISTIVE CONSTRUCTION			NO
CORRIDOR RATINGS			NO
SPRINKLER CORRIDOR RATING SUBSTITUTION			NO

"PRIORITY DRAWING"

NO	DATE	CLASS REV	ADC	DESCRIPTION	DWN	DES	CHKD	SUB	APP

STATE OF NEW MEXICO — Richard W. Kaselow — 5-14-2014 — NO. 2648 — REGISTERED ARCHITECT

AECOM

RLWTF-UP LOW LEVEL WASTE SUBPROJECT

LIFE SAFETY PLAN

BLDG. 230 TA-50

DRAWN	T. VLIET
DESIGN	T. LEACH
CHECKED	R. KASELOW
DATE	5/8/14

SUBMITTED: MANNY TARIN — APPROVED FOR RELEASE: ED ARTIOLA

Los Alamos NATIONAL LABORATORY — PO Box 1663, Los Alamos, New Mexico 87545

SHEET A-1100 — 94 OF 434

CLASSIFICATION — REVISER — DATE

PROJECT ID 100761 — DRAWING NO C55864 — REV 0

File Location: PA_TECHNOLOGY\ADZ99631 - RLWTF\350 CAD\SEC DAD DIRECTORY\ADZ0NLLY FACILITY\A\SHEET\C55864-A-1100-REV0.dwg
Plotted By: BROEHAM, DARLENE Plot Date: Tuesday, May 06, 2014 Plot CFG File: UNLCFG Page Setup Name: —— Initiator: N LDName: 1400000000 Nanosmatic 8.

12115

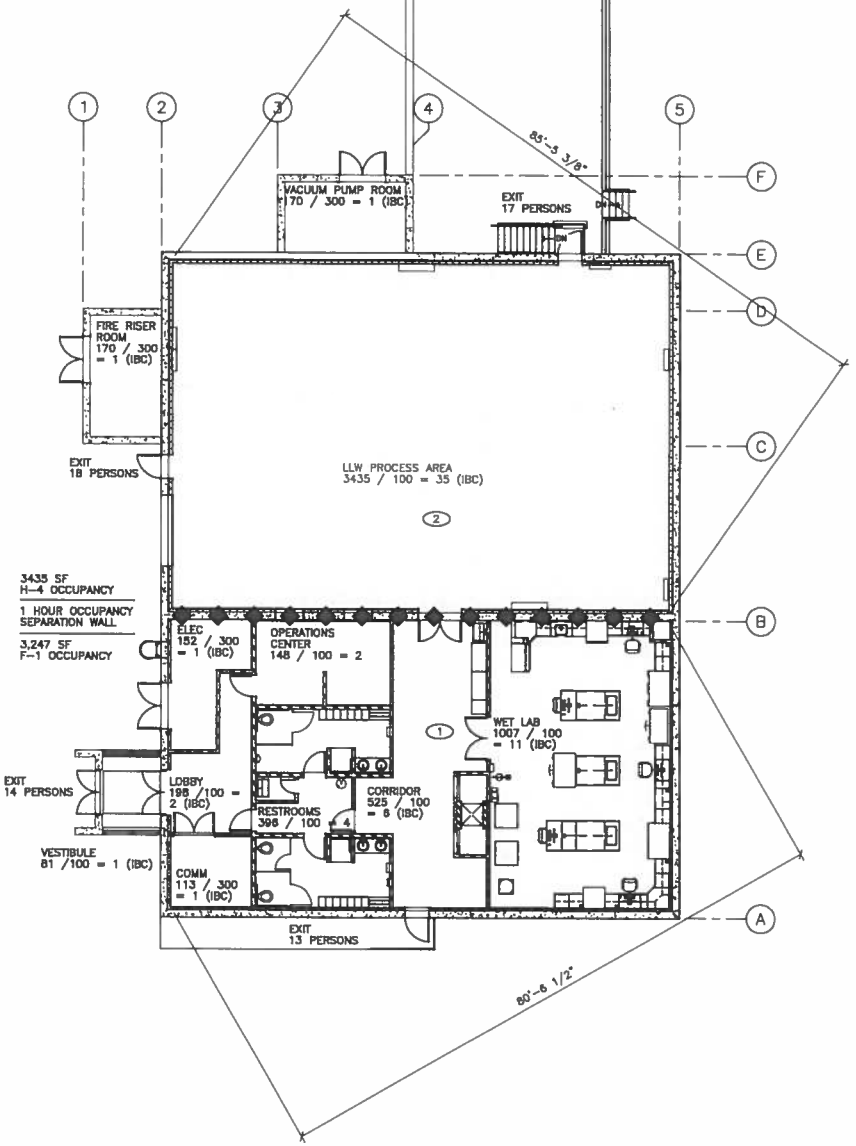

LIFE SAFETY OCCUPANCY LOAD PLAN

1/8"=1'-0"

GENERAL NOTES

1. IF THIS SHEET IS NOT 24"x 36", THEN IT IS A REDUCED SIZE PLOT. USE GRAPHIC SCALE ACCORDINGLY.

KEYED NOTES

(1) F-1 OCCUPANCY IS SHOWN ON A-1151 CONSISTING OF THE FOLLOWING ROOM IS THE ADMINISTRATION AREA:
- OPERATIONS CENTER STATION
- WET LABORATORY
- CORRIDORS
- LOBBY
- MEN'S LAVATORY
- WOMEN'S LAVATORY
- COMMUNICATIONS ROOM
- ELECTRICAL ROOM

(2) H-4 OCCUPANCY SHOWN ON A-1150 CONSISTING OF THE FOLLOWING ROOMS:
- LLW PROCESS AREA
- VACUUM PUMP ROOM
- FIRE RISER ROOM

"PRIORITY DRAWING"

NO	DATE	CLASS REV	ADC	DESCRIPTION	DRN	DES	CHKD	SUB	APP

STATE OF NEW MEXICO
Richard W. Kasselow
5-14-2014
NO. 2648
REGISTERED ARCHITECT

ACOM

RLWTF-UP LOW LEVEL WASTE SUBPROJECT

LIFE SAFETY OCCUPANCY LOAD PLAN

DRAWN	T. VUET
DESIGN	T. LEACH
CHECKED	R. KASSELOW
DATE	5/8/14

BLDG. 230 TA-50

SUBMITTED: MANNY TARIN — APPROVED FOR RELEASE: ED ARTIGLIA

Los Alamos NATIONAL LABORATORY — PO Box 1663 Los Alamos, New Mexico 87545

SHEET A-1101

95 OF 434

CLASSIFICATION | REVIEWER | DATE

PROJECT ID 100761 | DRAWING NO C55864 | REV 0

Shift: 12115
File Location: PA_TECHNOLOGY\ADSPACE1 - RLWTF\230 CAD\230 CAD BASE\DIRECTORY\ACCORDLLV FACILITY\ASSET\35864-A-1101-ROUTE.dwg
Pulled By: BROWNM, DARLENE; Plot Date: Tuesday, May 06, 2014; Plot CTB File: UNLIMITED; Page Setup Name: ——; Scale: 1; Scale: 1.000000; Measurement: A

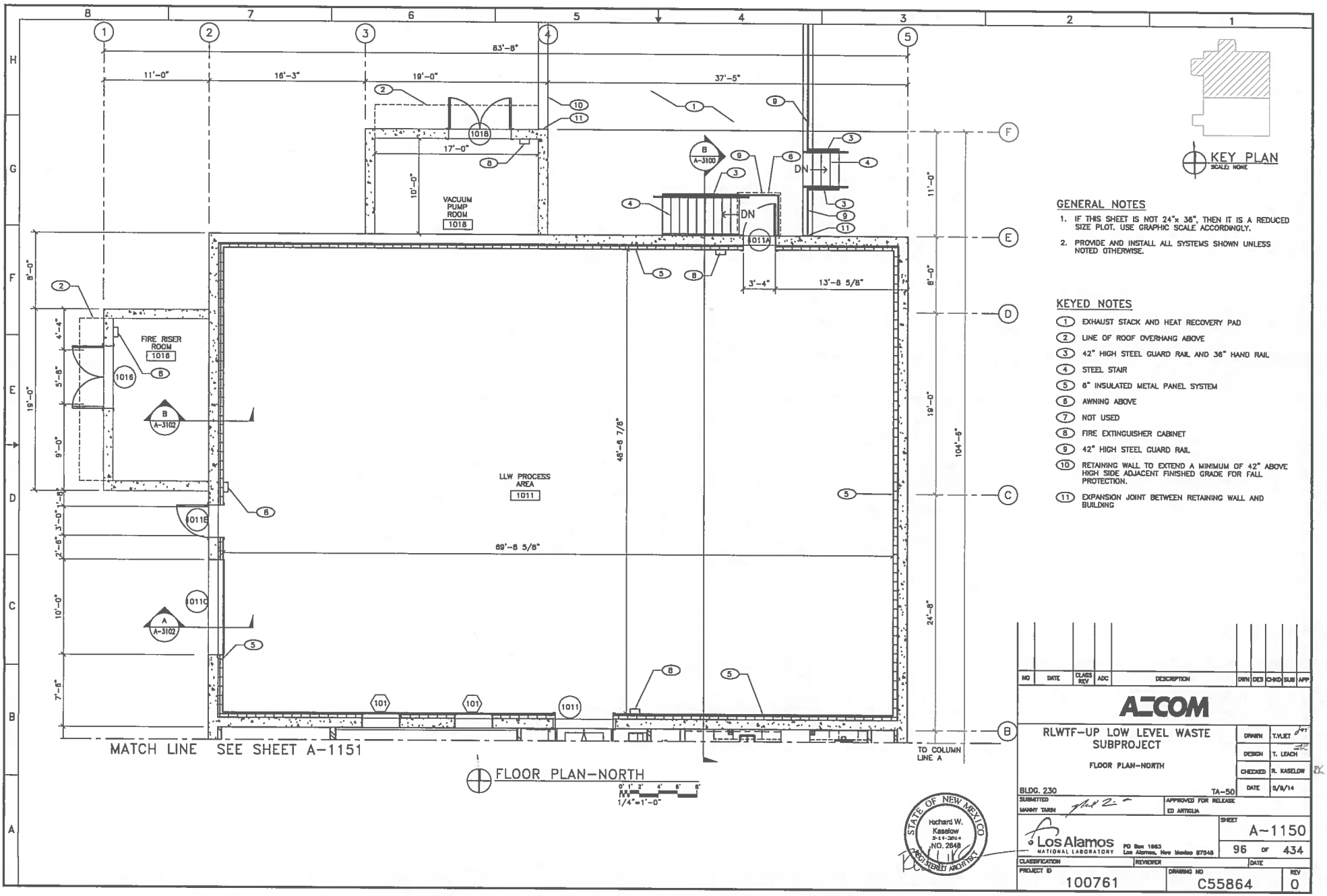

KEY PLAN
SCALE: NONE

GENERAL NOTES

1. IF THIS SHEET IS NOT 24"x 36", THEN IT IS A REDUCED SIZE PLOT. USE GRAPHIC SCALE ACCORDINGLY.
2. PROVIDE AND INSTALL ALL SYSTEMS SHOWN UNLESS NOTED OTHERWISE.

KEYED NOTES

1. EXHAUST STACK AND HEAT RECOVERY PAD
2. LINE OF ROOF OVERHANG ABOVE
3. 42" HIGH STEEL GUARD RAIL AND 36" HAND RAIL
4. STEEL STAIR
5. 8" INSULATED METAL PANEL SYSTEM
6. AWNING ABOVE
7. NOT USED
8. FIRE EXTINGUISHER CABINET
9. 42" HIGH STEEL GUARD RAIL
10. RETAINING WALL TO EXTEND A MINIMUM OF 42" ABOVE HIGH SIDE ADJACENT FINISHED GRADE FOR FALL PROTECTION.
11. EXPANSION JOINT BETWEEN RETAINING WALL AND BUILDING

NO	DATE	CLASS REV	ADC	DESCRIPTION	DRN	DES	CHKD	SUB	APP

AECOM

RLWTF-UP LOW LEVEL WASTE SUBPROJECT

FLOOR PLAN-NORTH

BLDG. 230 TA-50

SUBMITTED MANNY TARIN

APPROVED FOR RELEASE ED ARTIGLIA

DRAWN	T.YUET
DESIGN	T. LEACH
CHECKED	R. KASELOW
DATE	5/8/14

STATE OF NEW MEXICO Richard W. Kaselow 5-14-2014 NO. 2648 REGISTERED ARCHITECT

Los Alamos NATIONAL LABORATORY PO Box 1663 Los Alamos, New Mexico 87545

SHEET	A-1150
	96 OF 434
CLASSIFICATION	
REVIEWER	
DATE	
PROJECT ID	100761
DRAWING NO	C55864
REV	0

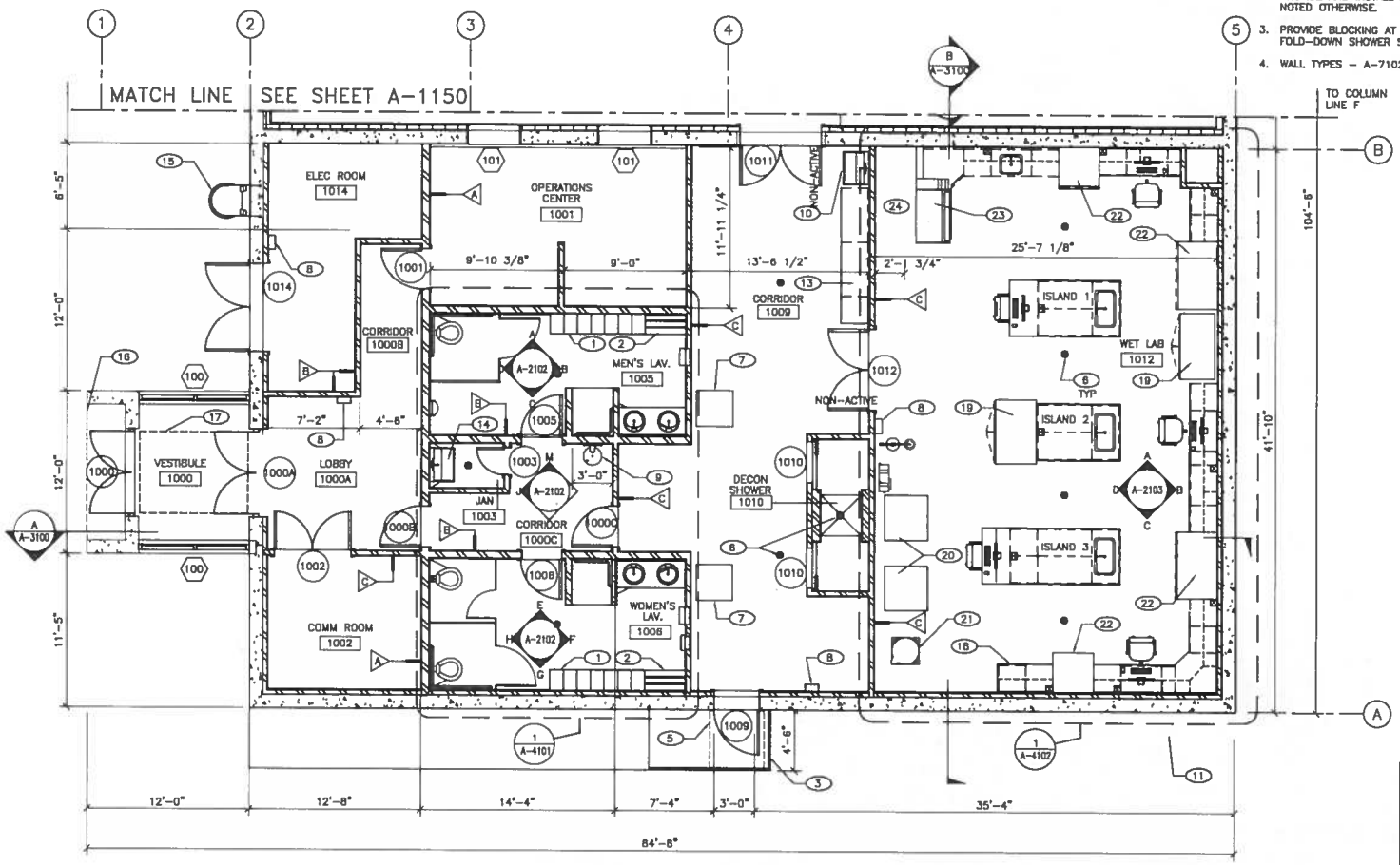

FLOOR PLAN-SOUTH

1/4"=1'-0"

GENERAL NOTES

1. IF THIS SHEET IS NOT 24"x 36", THEN IT IS A REDUCED SIZE PLOT. USE GRAPHIC SCALE ACCORDINGLY.
2. PROVIDE AND INSTALL ALL SYSTEMS SHOWN UNLESS NOTED OTHERWISE.
3. PROVIDE BLOCKING AT GRAB BAR, TOILET ACCESSORIES, FOLD-DOWN SHOWER SEAT, AND TOILET PARTITIONS.
4. WALL TYPES – A-7102

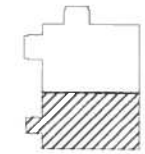

KEY PLAN
SCALE: NONE

KEYED NOTES

1. LOCKERS
2. BENCH
3. 42" STEEL GUARD RAIL
4. NOT USED
5. AWNING ABOVE
6. FLOOR DRAIN (TYPICAL)
7. PCM DEVICE
8. FIRE EXTINGUISHER CABINET
9. ELECTRIC WATER COOLER
10. SERVICE SINK
11. ARGON TANKS IN THIS AREA – SEE MECHANICAL
12. NOT USED
13. STORAGE CABINET
14. MOP SINK
15. ROOF ACCESS LADDER
16. ROOF OVERHANG ABOVE
17. 8'X8' RECESSED FLOOR MAT
18. SPECTROPHOTOMETER (GFE)
19. REFRIGERATOR (GFE)
20. LIQUID SCINTILLATION COUNTER (GFE)
21. GAMMA RAY SHIELD (GFE)
22. FUME HOOD
23. MASS SPECTROMETER (GFE)
24. REVERSE OSMOSIS UNIT (GFE)

NO	DATE	CLASS REV	ADC	DESCRIPTION	DWN	DES	CHKD	SUB	APP

AECOM

RLWTF-UP LOW LEVEL WASTE SUBPROJECT

FLOOR PLAN-SOUTH

BLDG. 230 TA-50

DRAWN	T.VLIET
DESIGN	T. LEACH
CHECKED	R. KASELOW
DATE	5/8/14

SUBMITTED: MANNY TARIN

APPROVED FOR RELEASE: ED ARTIGLIA

STATE OF NEW MEXICO
Richard W. Kaselow
5-14-2014
NO. 2648
REGISTERED ARCHITECT

Los Alamos NATIONAL LABORATORY
PO Box 1663
Los Alamos, New Mexico 87545

SHEET A-1151

97 OF 434

CLASSIFICATION | REVIEWER | DATE

PROJECT ID 100761 | DRAWING NO C55864 | REV 0

File Location: P:_TECHNOLOGY\AECOM\RLWTF\500 CAD\502 CAD DIRECTORY\AECOM\LLV FACILITY\A\SHEET\C55864-A-1151-R0.DWG
Plotted By: BRIDGMAN, DARLING Plot Date: Wednesday, May 14, 2014 Plot CTB File: LANL.CTB Page Setup Name: ---- Initials: 1; LTScale: 1.000000000 Measurement: 0;

12148

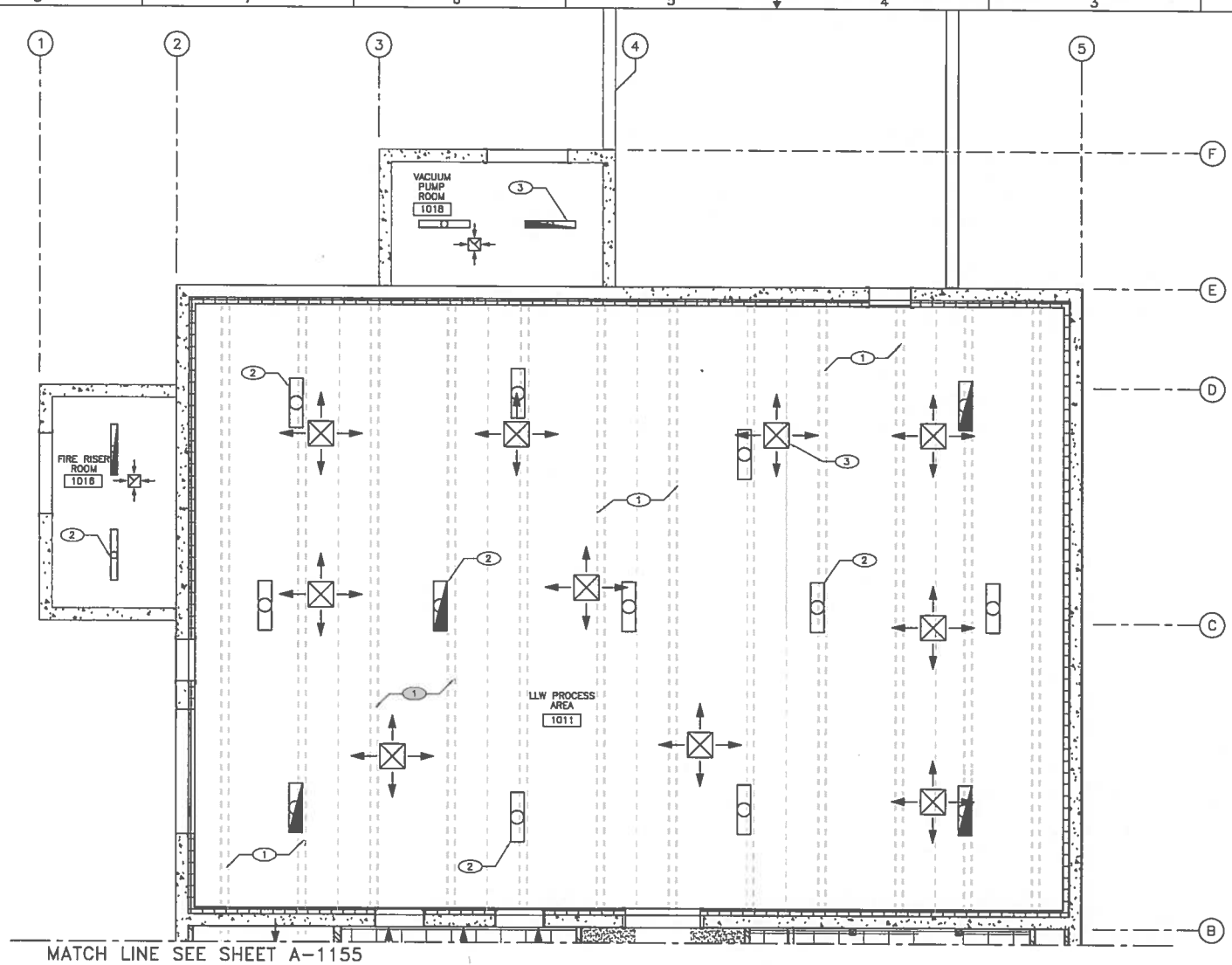

REFLECTED CEILING PLAN-NORTH

1/4"=1'-0"

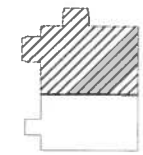

KEY PLAN
SCALE: NONE

GENERAL NOTES

1. IF THIS SHEET IS NOT 24"x 36", THEN IT IS A REDUCED SIZE PLOT. USE GRAPHIC SCALE ACCORDINGLY.
2. PROVIDE AND INSTALL ALL SYSTEMS SHOWN UNLESS NOTED OTHERWISE.
3. EXPOSED STRUCTURAL CEILING IN LLW PROCESS AREA, FIRE RISER ROOM, AND VACUUM PUMP ROOM.
4. PROVIDE A MINIMUM HEADROOM OF 80 (6'-8") AND MINIMUM WIDTH OF 36" (3'-0") FOR ALL EGRESS PATHS IN PROCESS AREA.

KEYED NOTES

1. CONCRETE TEE AT ROOF DECK (TYPICAL)
2. LIGHTING (TYPICAL)
3. MECHANICAL DIFFUSER (TYPICAL)

NO	DATE	CLASS REV	ADC	DESCRIPTION	DWN	DES	CHKD	SUB	APP

AECOM

RLWTF-UP LOW LEVEL WASTE SUBPROJECT

REFLECTED CEILING PLAN-NORTH

BLDG. 230 TA-50

DRAWN	T. VLIET
DESIGN	T. LEACH
CHECKED	R. KASELOW
DATE	8/8/14

SUBMITTED: MANNY TARIN

APPROVED FOR RELEASE: ED ARTIGLIA

STATE OF NEW MEXICO
Richard W. Kaselow
5-14-2014
NO. 2648
REGISTERED ARCHITECT

Los Alamos NATIONAL LABORATORY
PO Box 1663
Los Alamos, New Mexico 87545

SHEET A-1154

98 OF 434

CLASSIFICATION | REVIEWER | DATE

PROJECT ID 100761 | DRAWING NO C55864 | REV 0

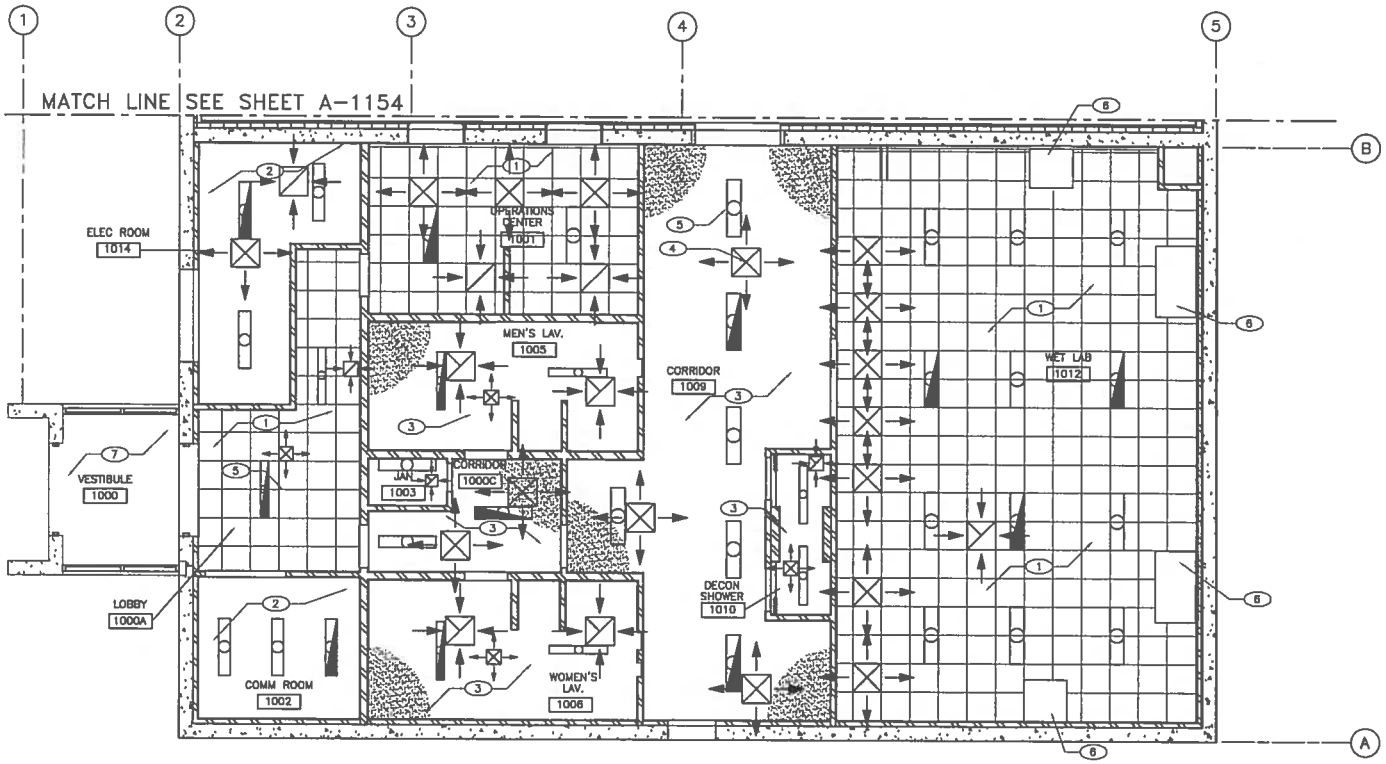

REFLECTED CEILING PLAN–SOUTH

1/4"=1'-0"

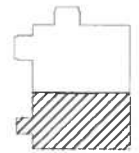

KEY PLAN
SCALE: NONE

GENERAL NOTES

1. IF THIS SHEET IS NOT 24"x 36", THEN IT IS A REDUCED SIZE PLOT. USE GRAPHIC SCALE ACCORDINGLY.
2. PROVIDE AND INSTALL ALL SYSTEMS SHOWN UNLESS NOTED OTHERWISE.

KEYED NOTES

1. 9'–0" SUSPENDED CEILING SYSTEM
2. OPEN TO ROOF DECK
3. GYPSUM BOARD CEILING
4. MECHANICAL DIFFUSER (TYPICAL)
5. LIGHTING (TYPICAL)
6. FUME HOOD
7. METAL CEILING

NO	DATE	CLASS REV	ADC	DESCRIPTION	DWN	DES	CHKD	SUB	APP

AECOM

RLWTF–UP LOW LEVEL WASTE SUBPROJECT

REFLECTED CEILING PLAN–SOUTH

BLDG. 230 TA-50

DRAWN	T. VIJET
DESIGN	T. LEACH
CHECKED	R. KASELOW
DATE	5/8/14

SUBMITTED: MANNY TAJEN

APPROVED FOR RELEASE: ED ARTIGLIA

STATE OF NEW MEXICO — Richard W. Kaselow — 5-14-2014 — NO. 2648 — REGISTERED ARCHITECT

Los Alamos NATIONAL LABORATORY — PO Box 1663, Los Alamos, New Mexico 87545

SHEET A–1155

99 OF 434

CLASSIFICATION | REVIEWER | DATE

PROJECT ID 100761 | DRAWING NO C55864 | REV 0

Plot Date: Tuesday, May 06, 2014 Plot CTB File: UNLATB Page Setup Name: —— Initials: TL LScale: 1.000000 Measurement: IN
File Location: P:_TECHNOLOGY\48229601 - RLWTF\300 CAD\CIVIL CAD DIRECTORY\ACCDN\LLV FACILITY\A\SHEET\C55864-A-1155-R0.DWG
Plotted By: BRENNAN, DARLENE

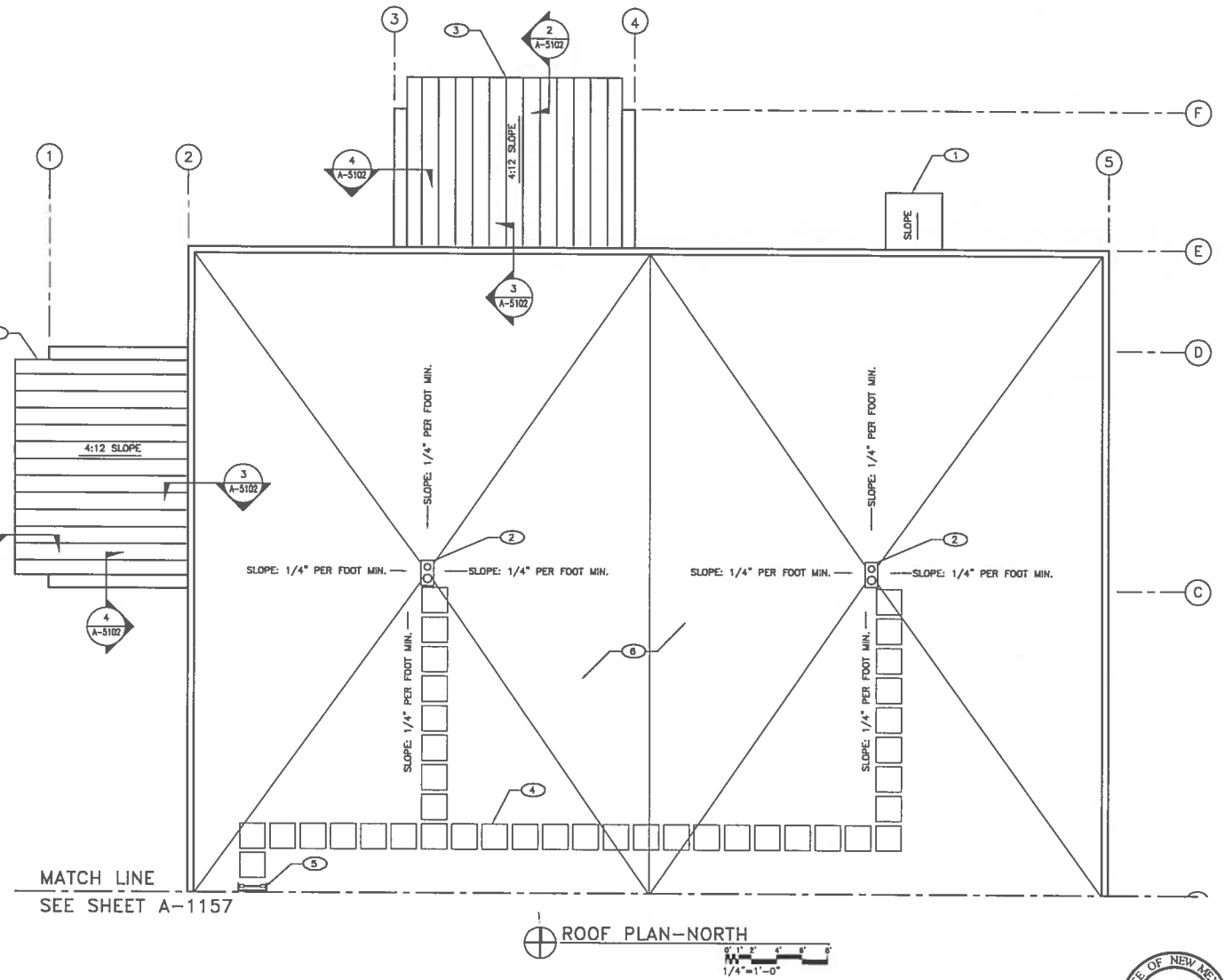

ROOF PLAN-NORTH

1/4"=1'-0"

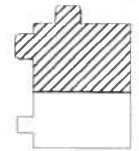

KEY PLAN
SCALE: NONE

GENERAL NOTES

1. IF THIS SHEET IS NOT 24"x 36", THEN IT IS A REDUCED SIZE PLOT. USE GRAPHIC SCALE ACCORDINGLY.
2. PROVIDE AND INSTALL ALL SYSTEMS SHOWN UNLESS NOTED OTHERWISE.

KEYED NOTES

1. AWNING OVER DOOR
2. ROOF DRAIN AND OVERFLOW
3. STANDING SEAM METAL ROOF
4. WALKING PADS
5. PROVIDE METALLIC LADDERS THAT ARE ELECTRICALLY CONTINOUS AND CONSTRUCTED OF METAL WITH A MINIMUM THICKNESS OF 3/16 ". LADDERS ARE REQUIRED TO BE BONDED TO THE LIGHTING PROTECTION SYSTEM AT THEIR UPPER AND LOWER EXTREMITIES.
6. CHLOROSULFONATE-POLYETHYLENE ROOFING (CSPE) FULLY ADHERED

NO	DATE	CLASS REV	ADC	DESCRIPTION	DWN	DES	CHKD	SUB	APP

STATE OF NEW MEXICO
Richard W. Kaselow
5-14-2014
NO. 2648
REGISTERED ARCHITECT

AECOM

RLWTF-UP LOW LEVEL WASTE SUBPROJECT

ROOF PLAN-NORTH

DRAWN	T. VUET
DESIGN	T. LEACH
CHECKED	R. KASELOW
DATE	5/8/14

BLDG. 230 TA-50

SUBMITTED MANNY TARIN

APPROVED FOR RELEASE ED ARTIOLA

Los Alamos NATIONAL LABORATORY PO Box 1663 Los Alamos, New Mexico 87545

SHEET A-1156

100 OF 434

CLASSIFICATION REVIEWER DATE

PROJECT ID 100761 DRAWING NO C55864 REV 0

121511

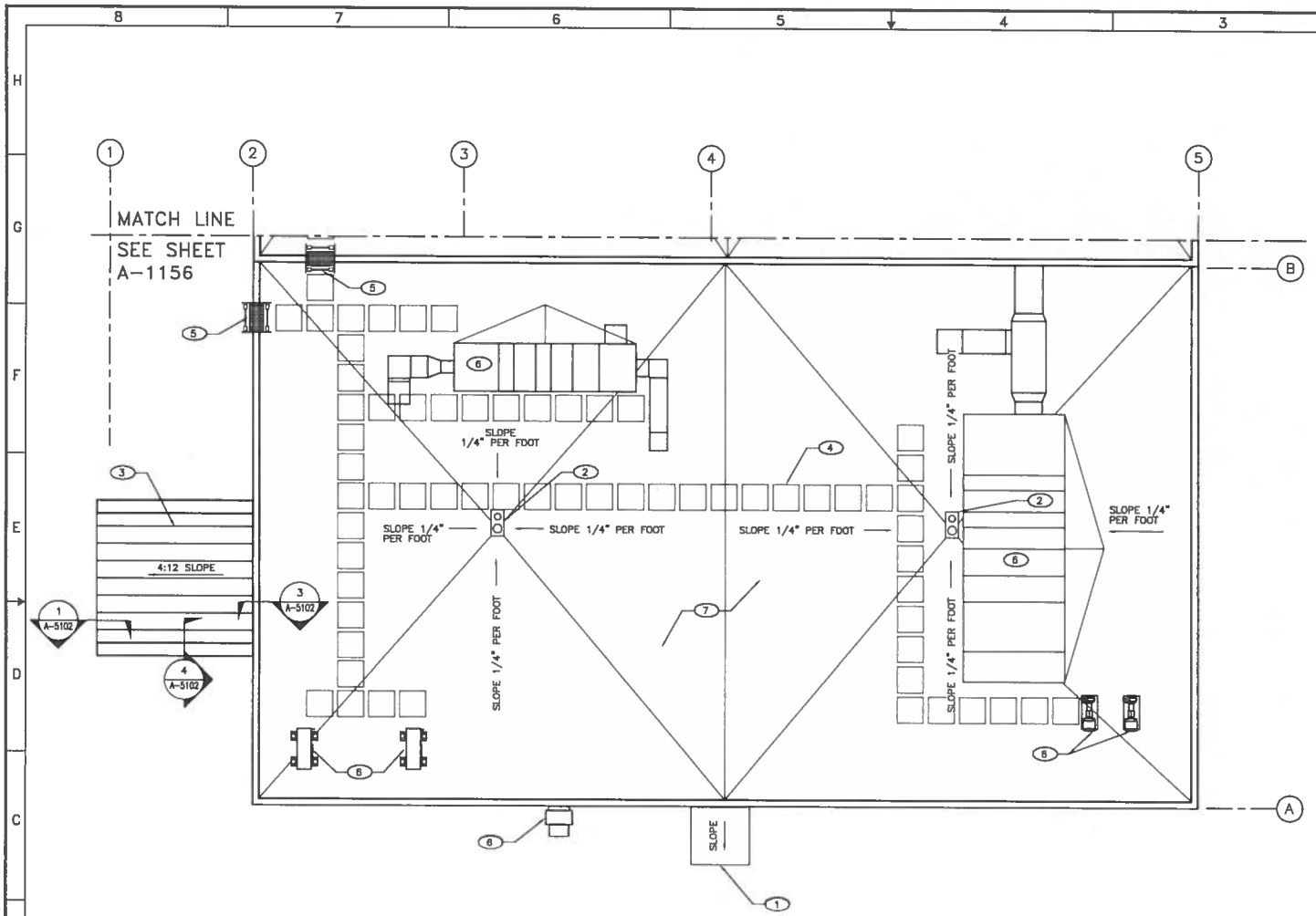

ROOF PLAN–SOUTH

1/4"=1'-0"

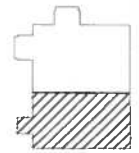

KEY PLAN
SCALE: NONE

GENERAL NOTES

1. IF THIS SHEET IS NOT 24"x 36", THEN IT IS A REDUCED SIZE PLOT. USE GRAPHIC SCALE ACCORDINGLY.
2. PROVIDE AND INSTALL ALL SYSTEMS SHOWN UNLESS NOTED OTHERWISE.

KEYED NOTES

1. AWNING OVER DOOR
2. ROOF DRAIN AND OVERFLOW
3. STANDING SEAM METAL ROOF
4. WALKING PADS
5. PROVIDE METALLIC LADDERS THAT ARE ELECTRICALLY CONTINUOUS AND CONSTRUCTED OF METAL WITH A MINIMUM THICKNESS OF 3/16". LADDERS ARE REQUIRED TO BE BONDED TO THE LIGHTNING PROTECTION SYSTEM AT THEIR UPPER AND LOWER EXTREMITIES.
6. MECHANICAL EQUIPMENT
7. CHLOROSULFONATE–POLYETHYLENE ROOFING (CSPE) FULLY ADHERED

NO	DATE	CLASS REV	ADC	DESCRIPTION	DRW	DES	CHKD	SUB	APP

AECOM

RLWTF–UP LOW LEVEL WASTE SUBPROJECT

ROOF PLAN–SOUTH

BLDG. 230 TA-50

DRAWN T. VUET
DESIGN T. LEACH
CHECKED R. KASELOW
DATE 5/8/14

SUBMITTED MANNY TARIN
APPROVED FOR RELEASE ED ARTIGLIA

STATE OF NEW MEXICO
Richard W. Kaselow
5-14-2014
NO. 2648
REGISTERED ARCHITECT

Los Alamos NATIONAL LABORATORY
PO Box 1663 Los Alamos, New Mexico 87545

SHEET A–1157
101 OF 434

CLASSIFICATION | REVIEWER | DATE

PROJECT ID 100761
DRAWING NO C55864
REV 0

121152

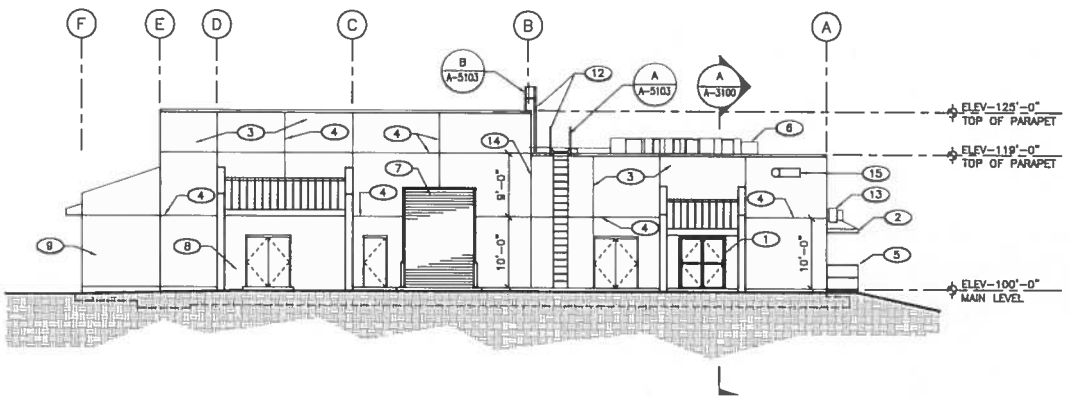

WEST ELEVATION

1/8"=1'-0"

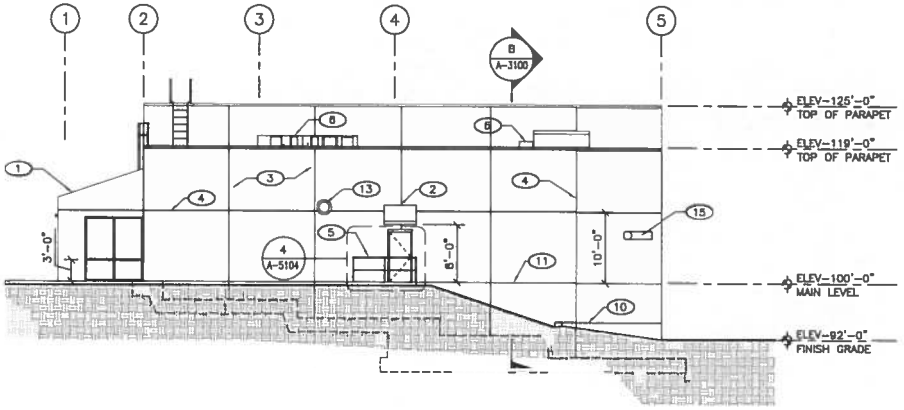

SOUTH ELEVATION

1/8"=1'-0"

GENERAL NOTES

1. IF THIS SHEET IS NOT 24"x 36", THEN IT IS A REDUCED SIZE PLOT. USE GRAPHIC SCALE ACCORDINGLY.
2. PROVIDE AND INSTALL ALL SYSTEMS SHOWN UNLESS NOTED OTHERWISE.
3. 7285.00' ABOVE MEAN SEA LEVEL (AMSL) = 100'-0" = 0.00 AFF. AT LOWER LEVEL
4. PROVIDE TWO BUILDING STRUCTURE SIGNS PER SPECIFICATION SECTION 10 1405 AND ESM SECTION B-C, G2040 2.3. COORDINATE WITH LANL FOR LOCATION.

KEYED NOTES

(1) ENTRY VESTIBULE
(2) AWNING
(3) CONCRETE EXTERIOR WALL STAINED/SEALED
(4) REVEAL (TYP.)
(5) 42" STEEL GUARD RAIL
(6) ROOF TOP EQUIPMENT
(7) OVERHEAD DOOR
(8) FIRE RISER ROOM
(9) VACUUM PUMP ROOM
(10) RETAINING WALL AT ARGON TANK YARD
(11) REVEAL CONTROL JOINT
(12) ROOF ACCESS LADDER
(13) MECHANICAL EQUIPMENT
(14) EXPANSION JOINT
(15) ON-BUILDING IDENTIFICATION SIGN - SEE DETAIL 1/A-5105

STATE OF NEW MEXICO
Richard W. Kasslow
5-14-2014
NO. 2648
REGISTERED ARCHITECT

NO	DATE	CLASS REV	ADC	DESCRIPTION	DRN	DES	CHKD	SUB	APP

AECOM

RLWTF-UP LOW LEVEL WASTE SUBPROJECT

EXTERIOR ELEVATIONS - WEST, SOUTH

BLDG. 230 TA-50

DRAWN	T. VIJET
DESIGN	T. LEACH
CHECKED	R. KASSLOW
DATE	5/8/14

SUBMITTED MANNY TARIN

APPROVED FOR RELEASE ED ARTIOLIA

Los Alamos NATIONAL LABORATORY PO Box 1663 Los Alamos, New Mexico 87545

SHEET A-2100

102 OF 434

CLASSIFICATION	REVISION	DATE
PROJECT ID 100761	DRAWING NO C55864	REV 0

File: Locs:\Work Pa_TECHNOLOGY\482PROJ - RLWTF\300 CAD\302 DRAWINGS\ARCH\LLV FACILITY\A SHEET\C55864-A-2100-RLWTF.dwg Model: by: GREENWAY, DARLENE Plot Date: Wednesday, May 14, 2014 Plot: CTB File: LANL.ctb Page Setup Name: —— Initiator: LI Scale: 1.000000 Measurement: E

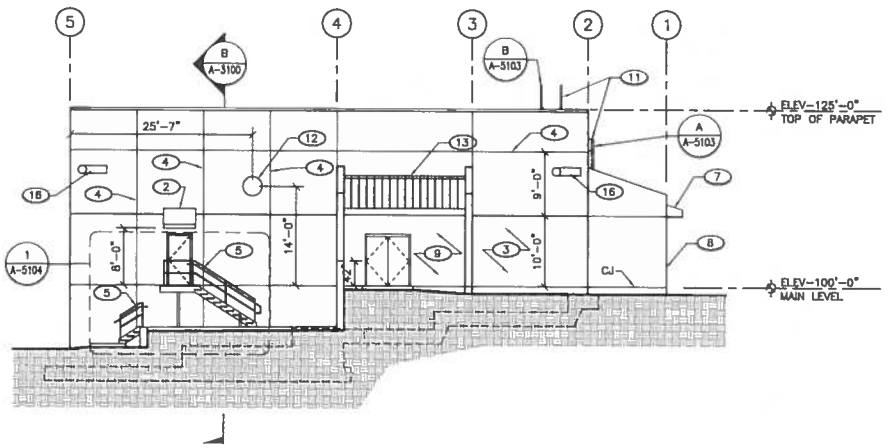

NORTH ELEVATION

1/8"=1'-0"

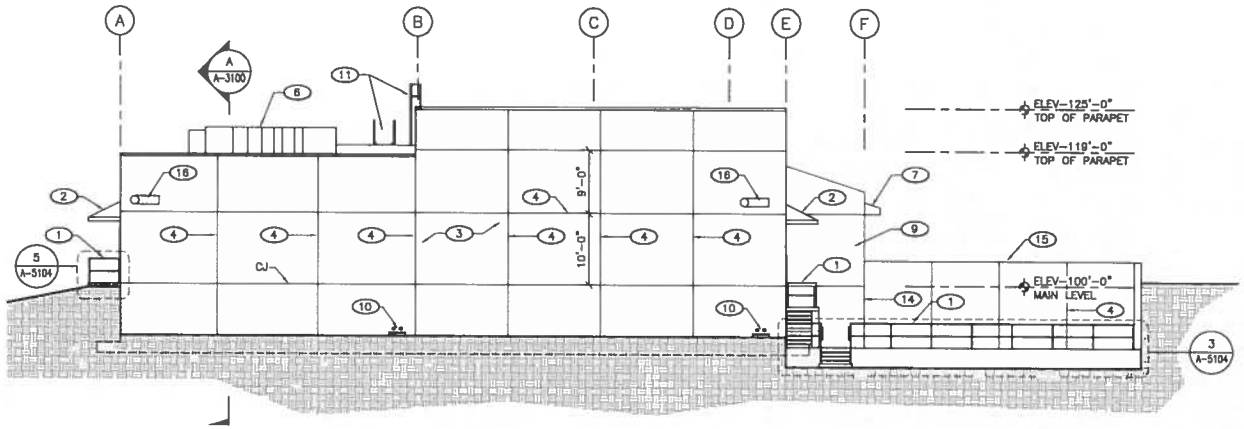

EAST ELEVATION

1/8"=1'-0"

GENERAL NOTES

1. IF THIS SHEET IS NOT 24"x 36", THEN IT IS A REDUCED SIZE PLOT. USE GRAPHIC SCALE ACCORDINGLY.
2. PROVIDE AND INSTALL ALL SYSTEMS SHOWN UNLESS NOTED OTHERWISE.
3. 7285.00' ABOVE MEAN SEA LEVEL (AMSL) = 100'-0" = 0.00 AFF. AT LOWER LEVEL
4. PROVIDE TWO BUILDING STRUCTURE SIGNS PER SPECIFICATION SECTION 10 1405 AND ESM SECTION B-C, 02040 2.3. COORDINATE WITH LANL FOR LOCATION.

KEYED NOTES

1. 42" HIGH STEEL GUARD RAIL
2. AWNING
3. CONCRETE EXTERIOR WALL STAINED/SEALED
4. REVEAL CONTROL JOINT (TYP.)
5. 42" HIGH STEEL GUARDRAIL AND 36" STEEL HANDRAIL
6. ROOF TOP EQUIPMENT
7. OVERHANG
8. FIRE RISER ROOM
9. VACUUM PUMP ROOM
10. ROOF DRAIN OUTLET AND SPLASH BLOCK
11. ROOF LADDER
12. EXHAUST DUCT
13. STANDING SEAM METAL ROOF
14. EXPANSION JOINT
15. RETAINING WALL
16. ON-BUILDING IDENTIFICATION SIGN – SEE DETAIL 1/A-5105

NO	DATE	CLASS REV	ADC	DESCRIPTION	DRW	DES	CHKD	SUB	APP

AECOM

RLWTF-UP LOW LEVEL WASTE SUBPROJECT

EXTERIOR ELEVATIONS – NORTH, EAST

DRAWN T. VUET
DESIGN T. LEACH
CHECKED R. KASELOW
DATE 5/8/14

BLDG. 230 TA-50

SUBMITTED MANNY TARIN

APPROVED FOR RELEASE ED ARTIOLA

Los Alamos NATIONAL LABORATORY PO Box 1663 Los Alamos, New Mexico 87545

SHEET A-2101

103 OF 434

CLASSIFICATION REVIEWER DATE

PROJECT ID 100761

DRAWING NO C55864

REV 0

STATE OF NEW MEXICO Richard W. Kaselow 5-14-2014 NO. 2648 REGISTERED ARCHITECT

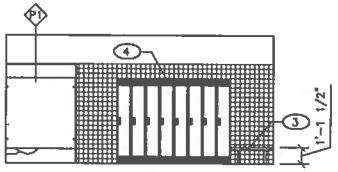

A A-1151 MEN'S NORTH ELEVATION

1/4"=1'-0"

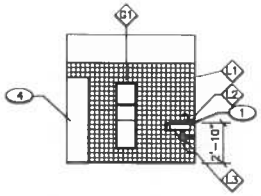

B A-1151 MEN'S EAST ELEVATION

1/4"=1'-0"

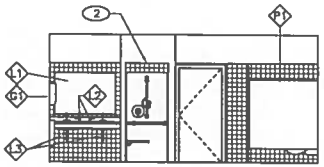

C A-1151 MEN'S SOUTH ELEVATION

1/4"=1'-0"

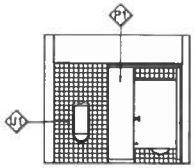

D A-1151 MEN'S WEST ELEVATION

1/4"=1'-0"

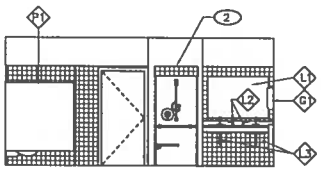

E A-1151 WOMEN'S NORTH ELEVATION

1/4"=1'-0"

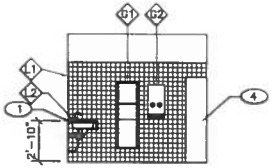

F A-1151 WOMEN'S EAST ELEVATION

1/4"=1'-0"

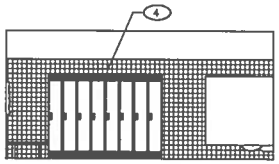

G A-1151 WOMEN'S SOUTH ELEVATION

1/4"=1'-0"

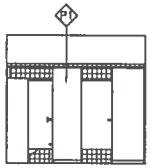

H A-1151 WOMEN'S WEST ELEVATION

1/4"=1'-0"

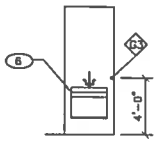

J A-1151 JANITOR

1/4"=1'-0"

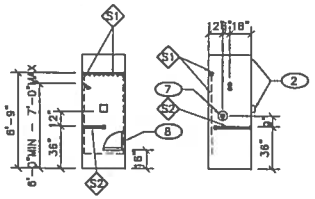

K A-1151 TYPICAL SHOWER STALL

1/4"=1'-0"

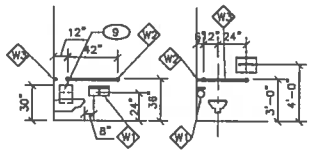

L A-1151 TOILET STALL LAYOUT

1/4"=1'-0"

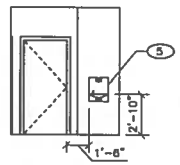

M A-1151 ELECTRIC WATER COOLER

1/4"=1'-0"

GENERAL NOTES

1. IF THIS SHEET IS NOT 24"x 36", THEN IT IS A REDUCED SIZE PLOT. USE GRAPHIC SCALE ACCORDINGLY.

KEYED NOTES

1. PLASTIC LAMINATE COUNTER TOP AND 4" BACK-SPLASH. ADJUST HEIGHT OF COUNTER TOP (DIMENSIONED AT 2'-10" MAX) SUCH THAT THE HIGHER OF THE RIM OF THE LAVATORY OR THE COUNTER IS AT 2'-10" AFF.
2. CERAMIC TILE SHOWER STALL WITH CERAMIC RECESSED SOAP DISH.
3. WOOD BENCH
4. METAL LOCKERS
5. ELECTRIC WATER COOLER
6. MOP SINK
7. SHOWER CONTROL, OFFSET PER ADA AS SHOWN
8. PROVIDE BLOCKING IN WALL FOR INSTALLATION OF FOLD-DOWN SEAT
9. SANITARY NAPKIN DISPENSER (W4) AT FEMALE STALLS ONLY

TOILET ACCESSORY NOTES

G1	TOWEL DISPENSER/WASTE RECEPTACLE	40" AFF TO DISPENSER SLOT
G2	SANITARY NAPKIN DISPENSER	40" AFF TO DISPENSER SLOT
G3	MOP AND BROOM HOLDER	AS SHOWN
L1	MIRROR	40" AFF TO BOTTOM
L2	SOAP DISPENSER	ON COUNTER TOP
L3	UNDER SINK PIPE COVERS	AS SHOWN
W1	TOILET PAPER DISPENSER	AS SHOWN
W2	GRAB BAR - 42"	36" AFF TO TOP OF BAR
W3	GRAB BAR - 36"	36" AFF TO TOP OF BAR
W4	SANITARY NAPKIN RECEPTACLE	30" AFF TO TOP
W5	TOILET SEAT COVER DISPENSER	48" AFF TO DISPENSER SLOT
P1	TOILET PARTITIONS	OVERHEAD BRACED
S1	SHOWER ROD, CURTAIN & HOOKS	AS SHOWN
S2	GRAB BAR 30" X 18"	36" AFF TO TOP OF BAR
U1	URINAL	AS SHOWN

NO	DATE	CLASS REV	ADC	DESCRIPTION	DRN	DES	CHKD	SUB	APP

STATE OF NEW MEXICO
Richard W. Kaselow
5-14-2014
NO. 2648
REGISTERED ARCHITECT

AECOM

RLWTF-UP LOW LEVEL WASTE SUBPROJECT

RESTROOM ELEVATIONS

DRAWN T. VUET
DESIGN T. LEACH
CHECKED R. KASELOW
DATE 5/8/14

BLDG. 230 TA-50

SUBMITTED MANNY TARIN

APPROVED FOR RELEASE ED ARTIDJA

Los Alamos NATIONAL LABORATORY PO Box 1663 Los Alamos, New Mexico 87545

SHEET A-2102

104 OF 434

CLASSIFICATION REVIEWER DATE

PROJECT ID 100761

DRAWING NO C55864

REV 0

12155

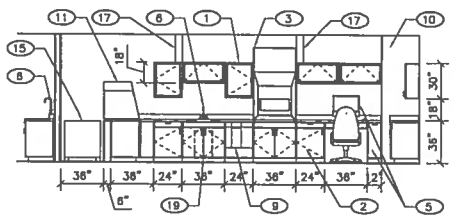

A A-4102 WET LABORATORY NORTH ELEVATION

0' 1' 2' 4' 6' 8'
1/4"=1'-0"

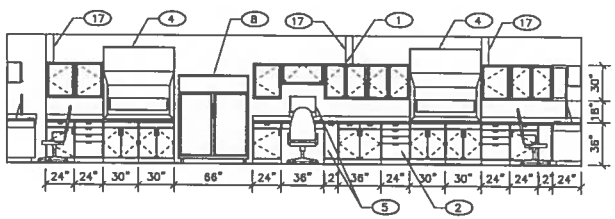

B A-4102 WET LABORATORY EAST ELEVATION

0' 1' 2' 4' 6' 8'
1/4"=1'-0"

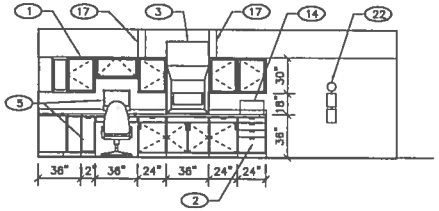

C A-4102 WET LABORATORY SOUTH ELEVATION

0' 1' 2' 4' 6' 8'
1/4"=1'-0"

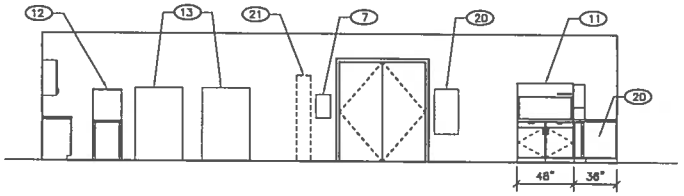

D A-4102 WET LABORATORY WEST ELEVATION

0' 1' 2' 4' 6' 8'
1/4"=1'-0"

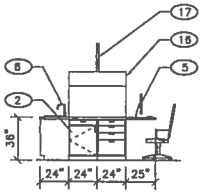

E A-4102 WET LABORATORY ISLAND 1

0' 1' 2' 4' 6' 8'
1/4"=1'-0"

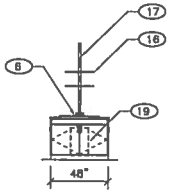

F A-4102 ISLAND 1

0' 1' 2' 4' 6' 8'
1/4"=1'-0"

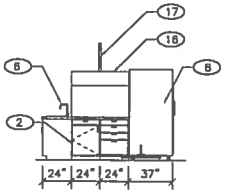

G A-4102 WET LABORATORY ISLAND 2

0' 1' 2' 4' 6' 8'
1/4"=1'-0"

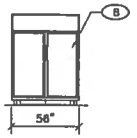

H A-4102 ISLAND 2

0' 1' 2' 4' 6' 8'
1/4"=1'-0"

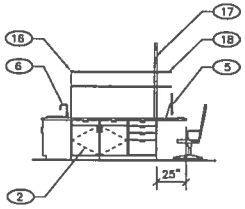

J A-4102 WET LABORATORY ISLAND 3

0' 1' 2' 4' 6' 8'
1/4"=1'-0"

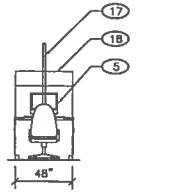

K A-4102 ISLAND 3

0' 1' 2' 4' 6' 8'
1/4"=1'-0"

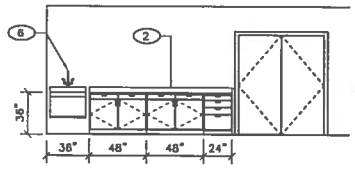

L A-4102 CORRIDOR 1009 ELEVATION

0' 1' 2' 4' 6' 8'
1/4"=1'-0"

GENERAL NOTES

1. IF THIS SHEET IS NOT 24"x 36", THEN IT IS A REDUCED SIZE PLOT. USE GRAPHIC SCALE ACCORDINGLY.
2. PROVIDE AND INSTALL ALL SYSTEMS SHOWN UNLESS NOTED OTHERWISE.
3. THIS AREA DOES NOT NEED TO COMPLY WITH ADA REQUIREMENTS

KEYED NOTES

1. WALL CABINETS
2. BASE CABINETS
3. 36" WIDE FUME HOOD W/HOOD STACK
4. 60" WIDE FUME HOOD W/HOOD STACK
5. COMPUTER SYSTEM (GFE)
6. SINK
7. FIRE EXTINGUISHER CABINET
8. REFRIGERATOR
9. GLASS SCRUBBER/WASHER
10. PLUMBING UTILITY CHASE
11. MASS SPECTROMETER (GFE)
12. GAMMA RAY SHIELD (GFE)
13. LIQUID SCINTILLATION COUNTER (GFE)
14. SPECTROPHOTOMETER (GFE)
15. REVERSE OSMOSIS UNIT
16. DOUBLE SIDED SHELF
17. SERVICE SUPPORT FRAME FOR ELECTRICAL AND COMMUNICATIONS WIRING
18. SINGLE-SIDED SHELF
19. UNDER-COUNTER WATER HEATER (GFE)
20. ELECTRICAL PANEL BOARD
21. SAFETY SHOWER LOCATION
22. LOW OXYGEN MONITOR

NO	DATE	CLASS REV	ADC	DESCRIPTION	DRN	DES	CHKD	SUB	APP

AECOM

RLWTF-UP LOW LEVEL WASTE SUBPROJECT

INTERIOR ELEVATIONS

DRAWN	T. VUET
DESIGN	T. LEACH
CHECKED	R. KASELOW
DATE	5/8/14

BLDG. 230 TA-50

SUBMITTED MANNY TARIN

APPROVED FOR RELEASE ED ARTIGLIA

Richard W. Kaselow 5-14-2014 NO. 2648 STATE OF NEW MEXICO REGISTERED ARCHITECT

Los Alamos NATIONAL LABORATORY PO Box 1663 Los Alamos, New Mexico 87545

SHEET A-2103

105 OF 434

CLASSIFICATION REVIEWER DATE

PROJECT ID 100761 DRAWING NO C55864 REV 0

95215

File Location: P:_TECHNOLOGY\582529831 - RLWTF\350 CAD\582 DRAWINGS\CAD DIRECTORY\ACCDATA\LV FACILITY\A\SHEET\355864-A-2103-R0.DWG
Plotted By: BROWN, SHAUNG Plot Date: Tuesday, May 06, 2014 Plot CTB File: LANL.CTB Page Setup Name: —— Initials: LI LSIcale: 1.000000000 Xrefs: None

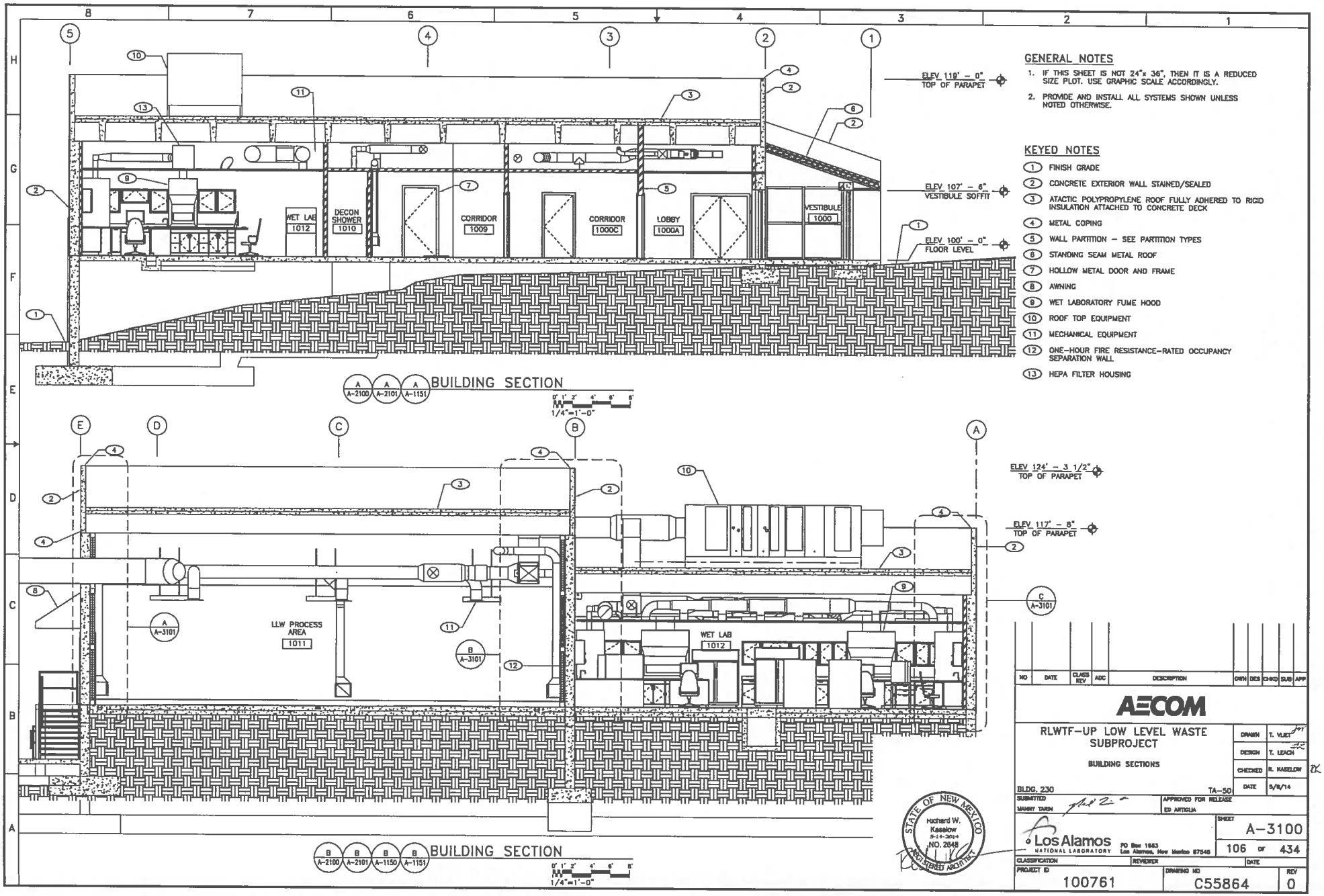

GENERAL NOTES

1. IF THIS SHEET IS NOT 24"x 36", THEN IT IS A REDUCED SIZE PLOT. USE GRAPHIC SCALE ACCORDINGLY.
2. PROVIDE AND INSTALL ALL SYSTEMS SHOWN UNLESS NOTED OTHERWISE.

KEYED NOTES

1. FINISH GRADE
2. CONCRETE EXTERIOR WALL STAINED/SEALED
3. ATACTIC POLYPROPYLENE ROOF FULLY ADHERED TO RIGID INSULATION ATTACHED TO CONCRETE DECK
4. METAL COPING
5. WALL PARTITION – SEE PARTITION TYPES
6. STANDING SEAM METAL ROOF
7. HOLLOW METAL DOOR AND FRAME
8. AWNING
9. WET LABORATORY FUME HOOD
10. ROOF TOP EQUIPMENT
11. MECHANICAL EQUIPMENT
12. ONE-HOUR FIRE RESISTANCE-RATED OCCUPANCY SEPARATION WALL
13. HEPA FILTER HOUSING

NO	DATE	CLASS REV	ADC	DESCRIPTION	ORIN	DES	CHKD	SUB	APP

AECOM

RLWTF-UP LOW LEVEL WASTE SUBPROJECT

BUILDING SECTIONS

DRAWN T. VUET
DESIGN T. LEACH
CHECKED R. KASELOW
DATE 5/8/14

BLDG. 230 TA-50

SUBMITTED MANNY TARIN

APPROVED FOR RELEASE ED ARTIGLIA

STATE OF NEW MEXICO Richard W. Kaselow 5-14-2014 NO. 2648 REGISTERED ARCHITECT

Los Alamos NATIONAL LABORATORY PO Box 1663 Los Alamos, New Mexico 87545

SHEET A-3100

106 OF 434

CLASSIFICATION REVIEWER DATE

PROJECT ID 100761

DRAWING NO C55864

REV 0

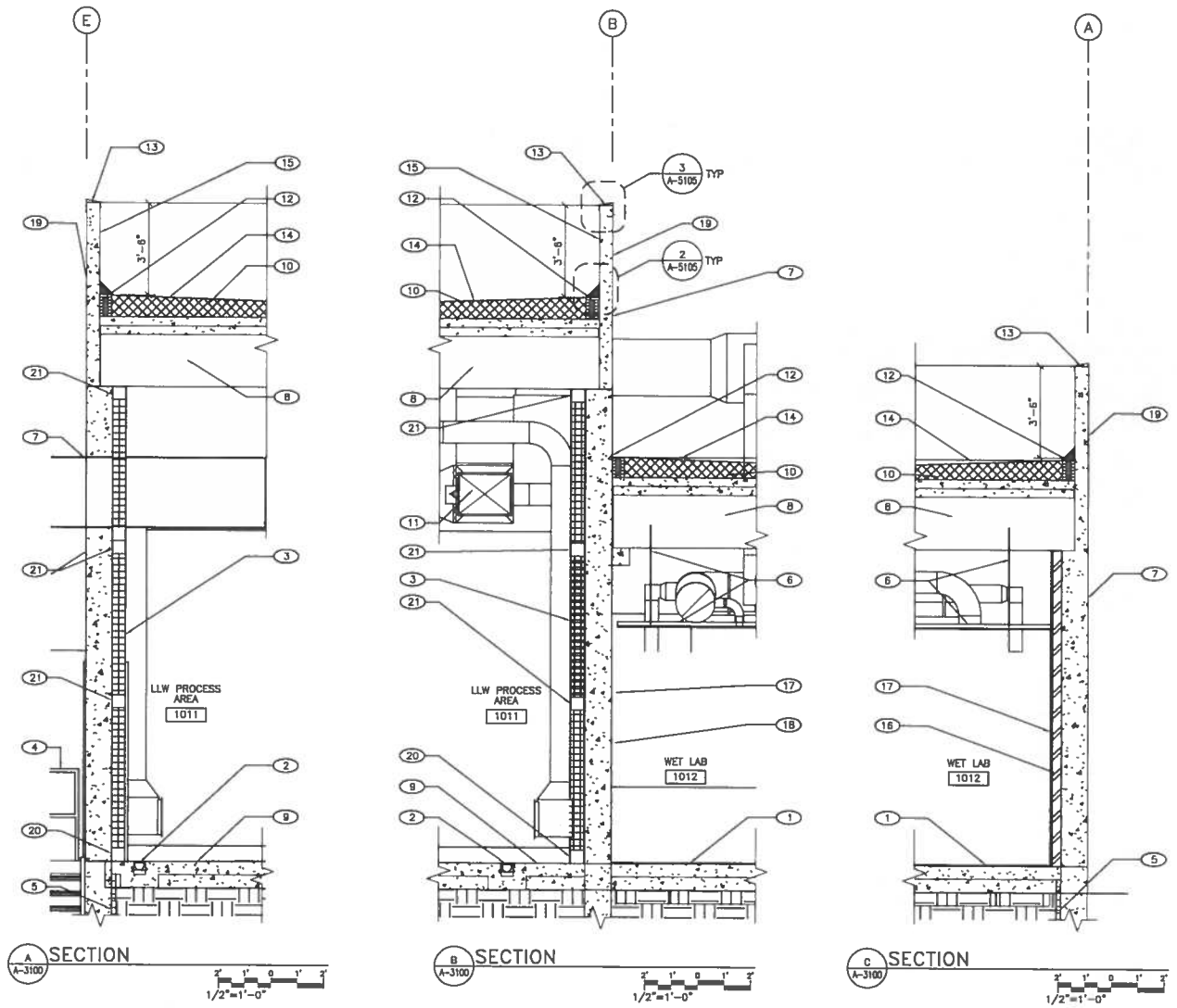

A A-3100 SECTION 1/2"=1'-0"

B A-3100 SECTION 1/2"=1'-0"

C A-3100 SECTION 1/2"=1'-0"

GENERAL NOTES

1. IF THIS SHEET IS NOT 24"x 36", THEN IT IS A REDUCED SIZE PLOT. USE GRAPHIC SCALE ACCORDINGLY.
2. PROVIDE AND INSTALL ALL SYSTEMS SHOWN UNLESS NOTED OTHERWISE.

KEYED NOTES

1. FINISH FLOOR – SEE ROOM FINISH SCHEDULE
2. TRENCH DRAIN
3. 6" METAL PANEL WITH BATT MINERAL WOOL
4. METAL GUARDRAIL AND HANDRAIL BEYOND
5. 2" EXPANDED POLYSTYRENE INSULATION
6. SUSPENDED CEILING SYSTEM
7. EXTERIOR CONCRETE WALL STAINED AND SEALED
8. CONCRETE STRUCTURE
9. SEALED CONCRETE FLOOR DECK
10. POLYISOCYANURATE INSULATION
11. MECHANICAL EQUIPMENT
12. FIRE TREATED WOOD BLOCKING
13. METAL COPING
14. ATACTIC POLYPROPYLENE ROOF
15. ROOF PARAPET FLASHING
16. RIGID INSULATION
17. GYPSUM BOARD WITH FINISH
18. ONE-HOUR FIRE RESISTANCE-RATED OCCUPANCY SEPARATION WALL
19. FALL PROTECTION PARAPET WALL
20. 8" X 6" CONCRETE CURB
21. HSS 8" X 6" – SEE STRUCTURAL SHEETS S-3100 AND S-3101

STATE OF NEW MEXICO
Richard W. Kaselow
3-14-2014
NO. 2648
REGISTERED ARCHITECT

NO	DATE	CLASS REV	ADC	DESCRIPTION	DWN	DES	CHKD	SUB	APP

AECOM

RLWTF–UP LOW LEVEL WASTE SUBPROJECT

WALL SECTIONS

DRAWN	T. VIJET
DESIGN	T. LEACH
CHECKED	R. KASELOW
DATE	5/8/14

BLDG. 230 TA-50

SUBMITTED MANNY TARIN

APPROVED FOR RELEASE ED ARTIGLIA

Los Alamos NATIONAL LABORATORY PO Box 1663 Los Alamos, New Mexico 87545

SHEET A-3101

107 OF 434

CLASSIFICATION REVISION DATE

PROJECT ID 100761

DRAWING NO C55864

REV 0

File: Locs Here PW_TECHNOLOGY\48209601 - RLWTF\300 CAD\SSC CAD SHEETS\FACILITY\VARIOUS\FACILITY\A\SHEETS\SSC864-A-3101-RLRV6
Plotted By: BRODMAN, DARLENE Plot Date: Monday, May 12, 2014 Plot STB File: UNLATB Page Setup Name: <---> Installed By: USAdata 1.0000000 Measurement: IN

121158

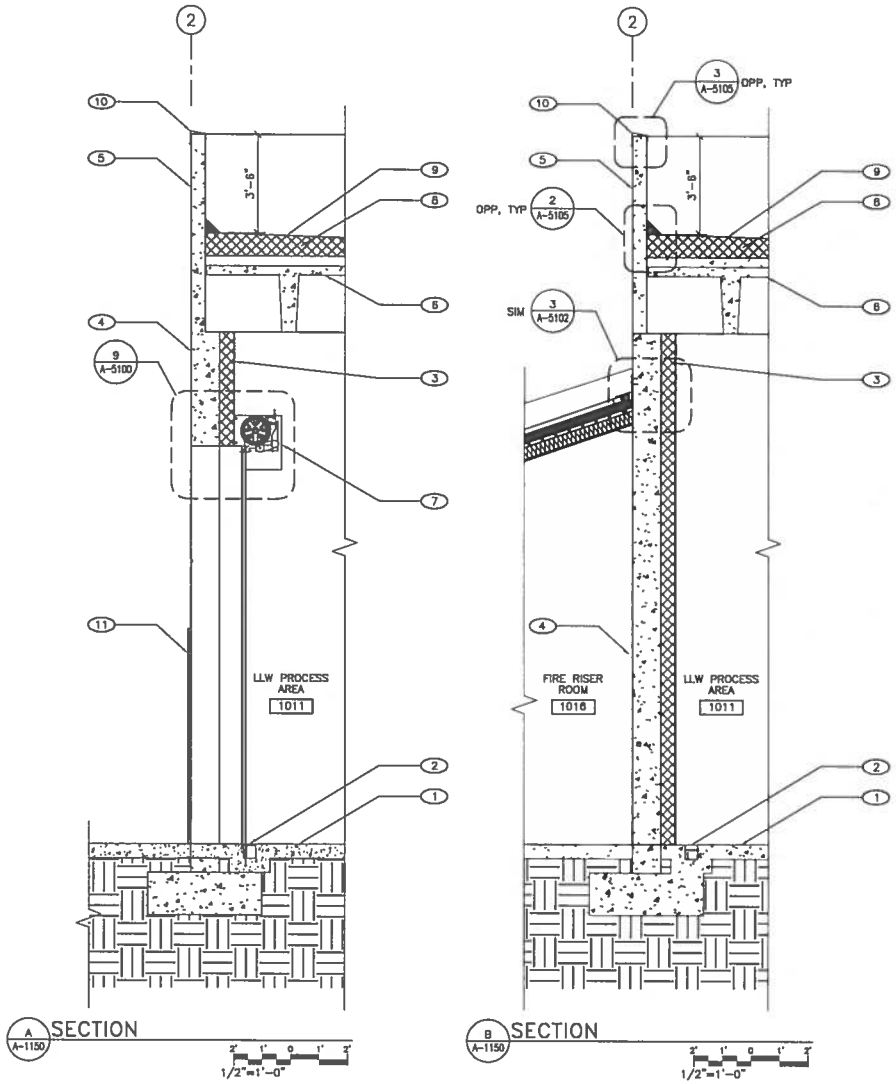

GENERAL NOTES

1. IF THIS SHEET IS NOT 24"x 36", THEN IT IS A REDUCED SIZE PLOT. USE GRAPHIC SCALE ACCORDINGLY.
2. PROVIDE AND INSTALL ALL SYSTEMS SHOWN UNLESS NOTED OTHERWISE.

KEYED NOTES

1. FINISH FLOOR – SEE ROOM FINISH SCHEDULE
2. TRENCH DRAIN
3. MINERAL WOOL SANDWICH PANEL
4. CONCRETE STRUCTURAL WALL – SEALED
5. FALL PROTECTION PARAPET WALL
6. CONCRTE ROOF STRUCTURE
7. OVERHEAD COILING DOOR
8. POLYISOCYANURATE INSULATION
9. ATACTIC POLYPROPYLENE ROOF
10. METAL COPING
11. DOOR FRAME BEYOND

STATE OF NEW MEXICO
Richard W. Kaselow
5-14-2014
NO. 2648
REGISTERED ARCHITECT

NO	DATE	CLASS REV	ADC	DESCRIPTION	DWN	DES	CHKD	SUB	APP

AECOM

RLWTF-UP LOW LEVEL WASTE SUBPROJECT

WALL SECTIONS

BLDG. 230 TA-50

DRAWN	T. VUET
DESIGN	T. LEACH
CHECKED	R. KASELOW
DATE	5/8/14

SUBMITTED: MANNY TARIN

APPROVED FOR RELEASE: ED ARTIGLIA

Los Alamos NATIONAL LABORATORY
PO Box 1663 Los Alamos, New Mexico 87545

SHEET A-3102

108 OF 434

CLASSIFICATION | REVIEWER | DATE

PROJECT ID 100761 | DRAWING NO C55864 | REV 0

File Location: P:_TECHNOLOGY\64229903 - RLWTF\500 CAD\502 CAD ISSUE\DRY\AECOM\LLW FACILITY\A\SHEET\C55864-A-3102-R0.DWG
Plotted By: BRICKMAN, DARLENE; Plot Date: Tuesday, May 06, 2014; Plot CTB File: LANL.CTB; Page Setup Name: ——; Isolation: 1; LTScale: 1.00000000; Measurement: 0;

12159

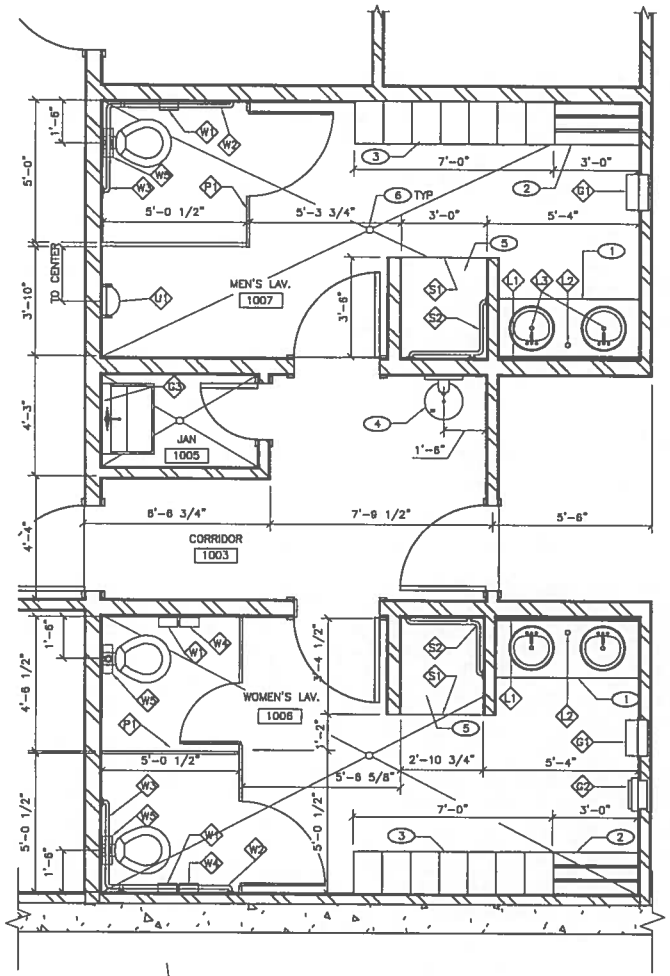

LARGE SCALE PLANS RESTROOM

1/2"=1'-0"

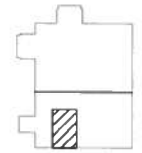

KEY PLAN

SCALE: NONE

GENERAL NOTES

1. IF THIS SHEET IS NOT 24"x 36", THEN IT IS A REDUCED SIZE PLOT. USE GRAPHIC SCALE ACCORDINGLY.
2. PROVIDE AND INSTALL ALL SYSTEMS SHOWN UNLESS NOTED OTHERWISE.
3. NOT ALL ITEMS IN THE TOILET ACCESSORIES NOTES ARE SHOWN ON THIS SHEET.

KEYED NOTES

(1) PLASTIC LAMINATE COUNTER TOP AND 4" BACK-SPLASH. ADJUST HEIGHT OF THE COUNTER TOP (DIMENSIONED AT 2'-10" MAX.) SUCH THAT THE HIGHER OF THE RIM OF THE LAVATORY OR THE COUNTER IS AT 2'-10" AFF.

(2) WOOD BENCH

(3) METAL LOCKERS

(4) ELECTRIC WATER COOLER

(5) CERAMIC TILE SHOWER STALL WITH CERAMIC RECESSED SOAP DISH

(6) FLOOR DRAIN

TOILET ACCESSORY NOTES ◇

G1	TOWEL DISPENSER/WASTE RECEPTACLE	40" AFF TO DISPENSER SLOT
G2	SANITARY NAPKIN DISPENSER	40" AFF TO DISPENSER SLOT
G3	MOP AND BROOM HOLDER	AS SHOWN
L1	MIRROR	40" AFF TO BOTTOM
L2	SOAP DISPENSER	ON COUNTER TOP
L3	UNDER SINK PIPE COVERS	AS SHOWN
W1	TOILET PAPER DISPENSER	AS SHOWN
W2	GRAB BAR – 42"	36" AFF TO TOP OF BAR
W3	GRAB BAR – 36"	36" AFF TO TOP OF BAR
W4	SANITARY NAPKIN RECEPTACLE	30" AFF TO TOP
W5	TOILET SEAT COVER DISPENSER	48" AFF TO DISPENSER SLOT
P1	TOILET PARTITIONS	OVERHEAD BRACED
S1	SHOWER ROD, CURTAIN & HOOKS	AS SHOWN
S2	GRAB BAR 30" X 18"	36" AFF TO TOP OF BAR
U1	URINAL	AS SHOWN

NO	DATE	CLASS REV	ADC	DESCRIPTION	DWN	DES	CHKD	SUB	APP

STATE OF NEW MEXICO
Richard W. Kaselow
5-14-2014
NO. 2648
REGISTERED ARCHITECT

AECOM

RLWTF-UP LOW LEVEL WASTE SUBPROJECT

LARGE SCALE PLANS RESTROOMS

BLDG. 230 TA-50

DRAWN	T. VUET
DESIGN	T. LEACH
CHECKED	R. KASELOW
DATE	5/8/14

SUBMITTED MANNY TARIN

APPROVED FOR RELEASE ED ARTIOLIA

Los Alamos NATIONAL LABORATORY PO Box 1663 Los Alamos, New Mexico 87545

SHEET A-4101

109 OF 434

CLASSIFICATION | REVIEWER | DATE

PROJECT ID 100761 | DRAWING NO C55864 | REV 0

12159

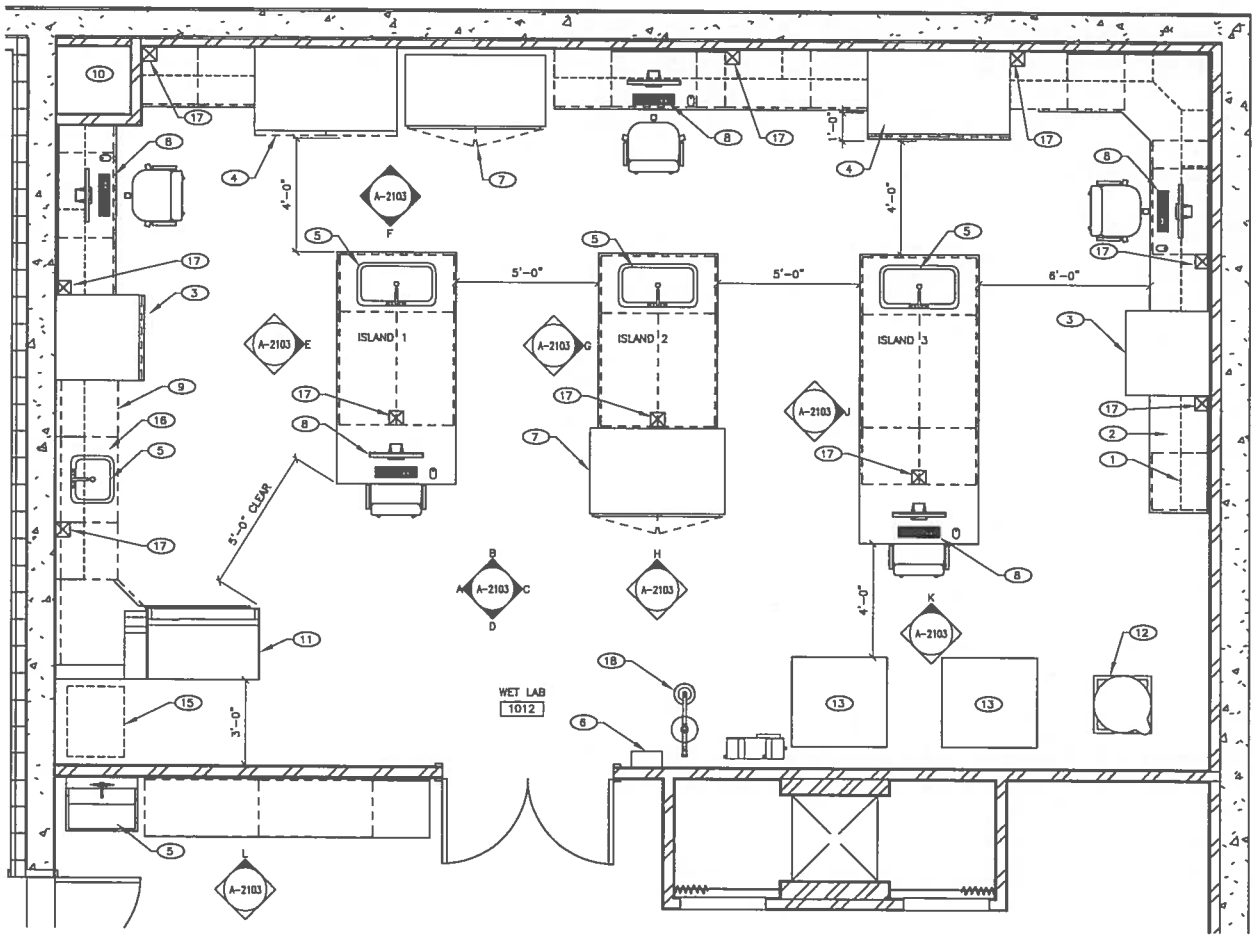

LARGE SCALE PLANS WET LAB

2" 1" 0 1" 2"
1/2"=1'-0"

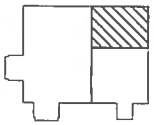

KEY PLAN
SCALE: NONE

GENERAL NOTES

1. IF THIS SHEET IS NOT 24"x 36", THEN IT IS A REDUCED SIZE PLOT. USE GRAPHIC SCALE ACCORDINGLY.
2. PROVIDE AND INSTALL ALL SYSTEMS SHOWN UNLESS NOTED OTHERWISE.
3. 7255.00' ABOVE MEAN SEA LEVEL (AMSL) = 100'-0" = 0.00 AFF.
4. SEE SHEET E-1108 FOR LAB CASEWORK RECEPTACLE LOCATIONS.
5. SEE SHEET T-1101 FOR LAB CASEWORK COMMUNICATIONS LOCATIONS.

KEYED NOTES

1. WALL CABINETS (TYP.)
2. BASE CABINETS (TYP.)
3. 3' WIDE FUME HOOD
4. 5' WIDE FUME HOOD
5. SINK
6. FIRE EXTINGUISHER CABINET
7. REFRIGERATOR – (GFE)
8. COMPUTER AND CHAIR – (GFE)
9. GLASS SCRUBBER/WASHER
10. PLUMBING UTILITY CHASE
11. MASS SPECTROMETER (GFE)
12. GAMMA RAY SHIELD (GFE)
13. LIQUID SCINTILLATION COUNTER – (GFE)
14. SPECTOPHOTOMETER (GFE)
15. REVERSE OSMOSIS UNIT
16. UNDER-COUNTER WATER HEATER
17. ELECTRICAL POWER AND COMMUNICATIONS SERVICE UMBILICAL
18. SAFETY SHOWER

NO	DATE	CLASS REV	ADC	DESCRIPTION	DRN	DES	CHKD	SUB	APP

STATE OF NEW MEXICO
Richard W. Kasslow
5-14-2014
NO. 2648
REGISTERED ARCHITECT

AECOM

RLWTF-UP LOW LEVEL WASTE SUBPROJECT

LARGE SCALE PLANS
WET LABORATORY

DRAWN	T. VUET
DESIGN	T. LEACH
CHECKED	R. KASSLOW
DATE	5/8/14

BLDG. 230 TA-50

SUBMITTED MANNY TARIN

APPROVED FOR RELEASE ED ARTIOLA

Los Alamos NATIONAL LABORATORY
PO Box 1663 Los Alamos, New Mexico 87545

SHEET A-4102
110 OF 434

CLASSIFICATION | REVIEWER | DATE

PROJECT ID 100761 | DRAWING NO C55864 | REV 0

File: Locs/Work Pk_TECHNOLOGY\ARCHIVES - RLWTF\300 CAD\300 CAD FILES\DIRECTORY\MECHANICAL\V FACILITY\A\SHEET\C55864-A-4102-RELEVG
Plotted By: MCDONALD, DARLENE Plot Date: Wednesday, May 07, 2014 Plot CTB File: UNLOTB Page Setup Name: —— Initials: 1; LTScale: 1.0000000 Measurement: IN
12161

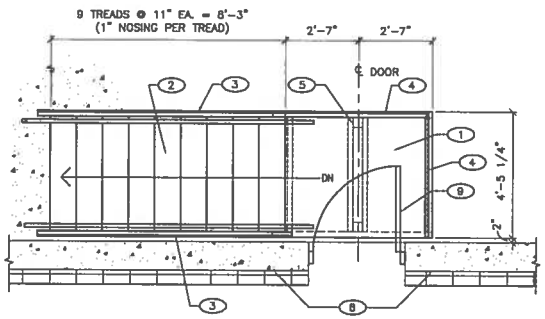

NORTH STAIR DETAIL PLAN

1/2"=1'-0"

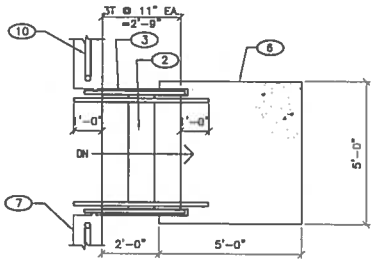

NORTH LANDING STAIR DETAIL PLAN

1/2"=1'-0"

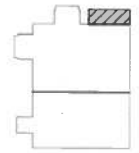

KEY PLAN

SCALE: NONE

GENERAL NOTES

1. IF THIS SHEET IS NOT 24"x 36", THEN IT IS A REDUCED SIZE PLOT. USE GRAPHIC SCALE ACCORDINGLY.
2. PROVIDE AND INSTALL ALL SYSTEMS SHOWN UNLESS NOTED OTHERWISE.

KEYED NOTES

(1) FIBER REINFORCED POLYMER (FRP) COVERED LANDING – SEE SHEET S-4100
(2) FRP COVERED STAIR TREADS – SEE SHEET S-4100
(3) 1 1/2" ϕ STEEL PIPE GUARDRAIL WITH 1 1/2" ϕ HANDRAIL
(4) 1 1/2 ϕ STEEL PIPE GUARDRAIL
(5) STEEL COLUMN AND BEAMS BELOW, SEE SHEET S-4100
(6) 5'-0" x 5'-0" CONCRETE LANDING
(7) CONCRETE RETAINING WALL BELOW
(8) 12" CONCRETE EXTERIOR BUILDING WALL
(9) EXIT DOOR
(10) GUARDRAIL ON RETAINING WALL, SEE DETAIL 4/A-5104

NO	DATE	CLASS REV	ADC	DESCRIPTION	DRWN	DES	CHKD	SUB	APP

STATE OF NEW MEXICO
Richard W. Kasslow
5-19-2014
NO. 2648
REGISTERED ARCHITECT

AECOM

RLWTF-UP LOW LEVEL WASTE SUBPROJECT

LARGE SCALE PLANS
NORTH ELEVATION STAIR

DRAWN	T. VUET
DESIGN	T. LEACH
CHECKED	R. KASSLOW
DATE	5/8/14

BLDG. 230 TA-50

SUBMITTED: MANNY TARIN
APPROVED FOR RELEASE: ED ARTIOLA

Los Alamos NATIONAL LABORATORY
PO Box 1663 Los Alamos, New Mexico 87545

SHEET A-4103
111 OF 434

CLASSIFICATION | REVIEWER | DATE

PROJECT ID	DRAWING NO	REV
100761	C55864	0

File: Location PA_TECH\BLDG\A4103.DWG - RLWTF-1300 CAP/SDE CAD DIRECTORY\ACCORALLY FACILITY\A\SHEET\C55864-A-4103-R0.DWG
Plotted By: BROOKMAN, DARLENE Plot Date: Wednesday, May 07, 2014 Plot CFG File: UNLOCK Page Setup Name: —— Installs: 1 LTScale: 1.0000000 Measurement: 0

12162

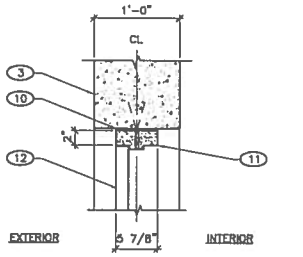

1 A-7100 HEAD/JAMB (SIM)

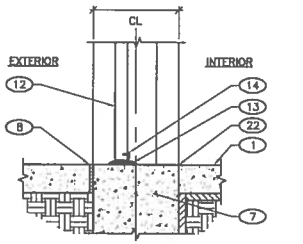

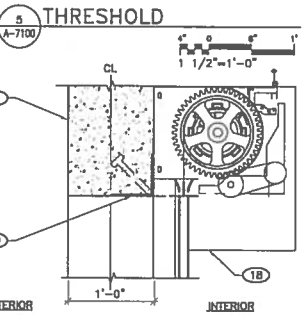

5 A-7100 THRESHOLD

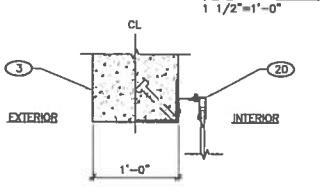

9 A-3102 / 9 A-7100 HEAD – OH DOOR

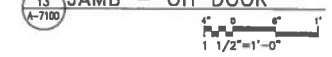

13 A-7100 JAMB – OH DOOR

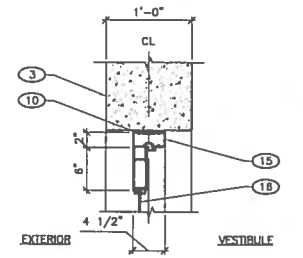

2 A-7100 HEAD/JAMB (SIM)

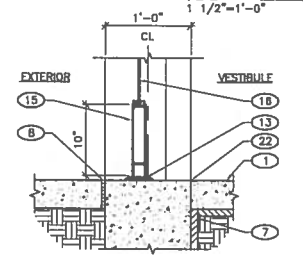

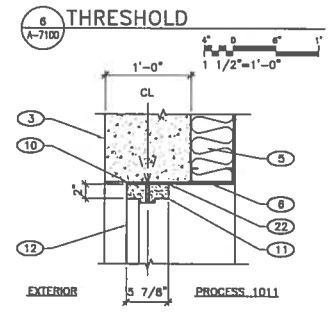

6 A-7100 THRESHOLD

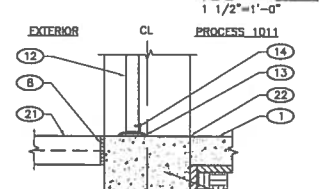

10 A-7100 HEAD/JAMB (SIM)

14 A-7100 THRESHOLD

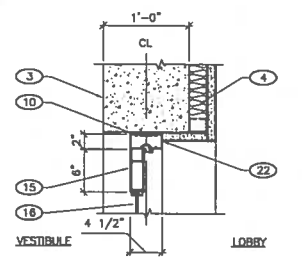

3 A-7100 HEAD/JAMB (SIM)

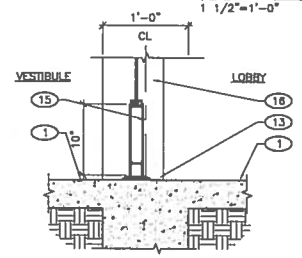

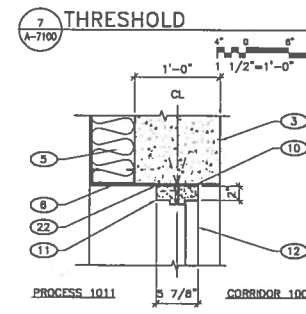

7 A-7100 THRESHOLD

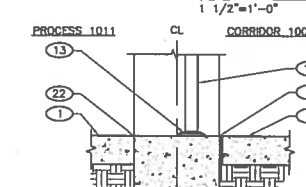

11 A-7100 HEAD/JAMB (SIM)

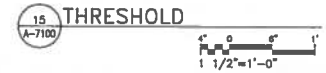

15 A-7100 THRESHOLD

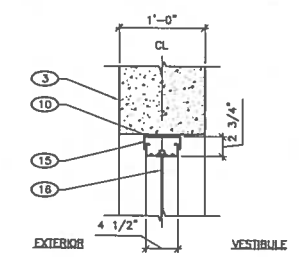

4 A-7100 HEAD/JAMB (SIM)

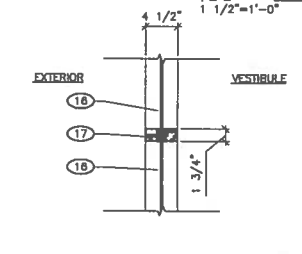

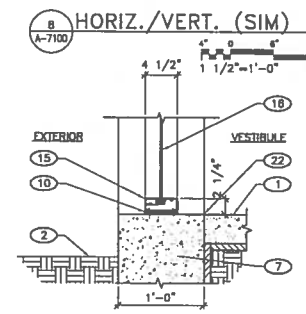

8 A-7100 HORIZ./VERT. (SIM)

12 A-7100 SILL

GENERAL NOTES

1. IF THIS SHEET IS NOT 24"x 36", THEN IT IS A REDUCED SIZE PLOT. USE GRAPHIC SCALE ACCORDINGLY.
2. PROVIDE AND INSTALL ALL SYSTEMS SHOWN UNLESS NOTED OTHERWISE.

KEYED NOTES

1. FLOOR FINISH – AS SCHEDULED
2. FINISH GRADE
3. CONCRETE STRUCTURAL WALL – SEALED.
4. 2 1/2" METAL STUD @ 16" O.C. WITH MINERAL WOOL INSULATION AND 5/8" TYPE 'X' GYPSUM BOARD
5. 6" METAL PANELS WITH MINERAL WOOL INSULATION
6. BRAKEMETAL
7. 1" RIGID INSULATION AT PERIMETER
8. 1/2" EXPANSION JOINT
9. CONTROL JOINT
10. WOOD SHIM AND BACKERROD WITH SEALANT BOTH SIDES
11. HOLLOW METAL DOOR FRAME WITH JAMB ANCHORS (FULL GROUT)
12. INSULATED METAL DOOR
13. ADA COMPLIANT THRESHOLD SET IN BED OF SEALANT
14. WEATHERSTRIPPING
15. ALUMINUM STOREFRONT SYSTEM WITH SEALANT BOTH SIDES
16. DOUBLE-PANE GLAZING
17. ALUMINUM STOREFRONT MULLION SYSTEM
18. OVERHEAD COILING DOOR HOOD AND MOTOR
19. STEEL ANGLE WITH ANCHOR
20. OVERHEAD COILING DOOR JAMB ANGLE WITH WEATHER STRIPPING
21. CONCRETE LANDING OR METAL STAIR LANDING, SEE SHEET A-1150
22. SEALANT

NO	DATE	CLASS REV	ADC	DESCRIPTION	DRW	DES	CHKD	SUB	APP

AECOM

RLWTF-UP LOW LEVEL WASTE SUBPROJECT

DOOR AND WINDOW DETAILS

BLDG. 230 TA-50

SUBMITTED MANNY TAPIA

APPROVED FOR RELEASE ED ARTALIA

DRAWN	T. VIJET
DESIGN	T. LEACH
CHECKED	R. KASELOW
DATE	5/8/14

STATE OF NEW MEXICO Richard W. Kaselow 5-14-2014 NO. 2648 REGISTERED ARCHITECT

Los Alamos NATIONAL LABORATORY PO Box 1663 Los Alamos, New Mexico 87545

SHEET A-5100

112 OF 434

CLASSIFICATION REVIEWER DATE

PROJECT ID 100761

DRAWING NO C55864

REV 0

65913

File: Locs:\Work PA_TECH\ENGINEERING\RLWTF\300 CAD\300 CAD SHEETS\DWG\RLLW FACILITY\A\SHEETS\055864-A-5100-BLDG Plotted By: BROOKMAN, DARLENE Plot Date: Wednesday, May 07, 2014 Plot CTB File: LANL.ctb Page Setup Name: ---; Initials: 1; Units: 1.000000 Measurement: A

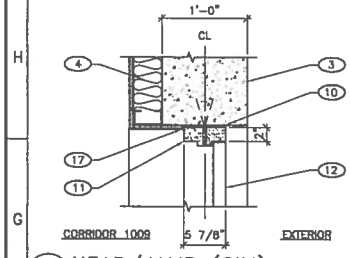

1 A-7100 HEAD/JAMB (SIM)

1 1/2"=1'-0"

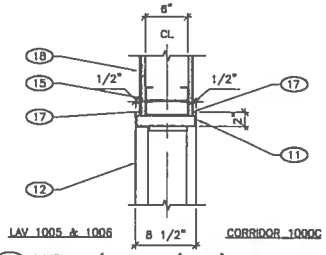

2 A-7100 HEAD/JAMB (SIM)

1 1/2"=1'-0"

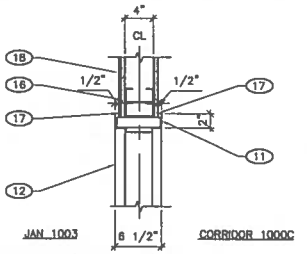

3 A-7100 HEAD/JAMB (SIM)

1 1/2"=1'-0"

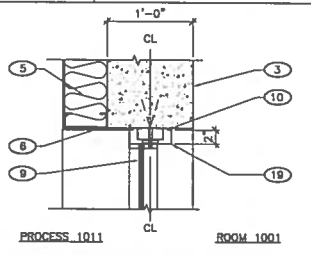

4 A-7100 HEAD/JAMB (SIM)

1 1/2"=1'-0"

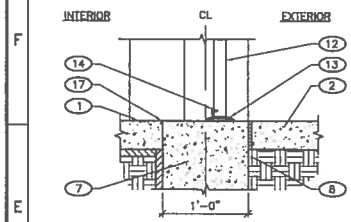

5 A-7100 THRESHOLD

1 1/2"=1'-0"

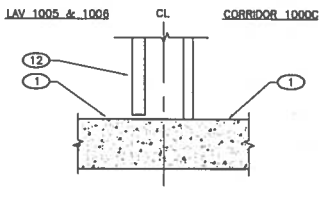

6 A-7100 THRESHOLD

1 1/2"=1'-0"

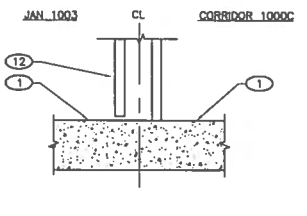

7 A-7100 THRESHOLD

1 1/2"=1'-0"

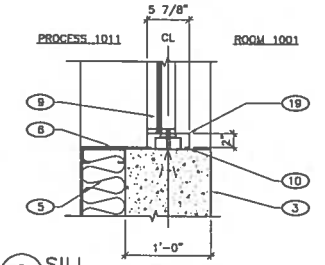

8 A-7100 SILL

1 1/2"=1'-0"

GENERAL NOTES

1. IF THIS SHEET IS NOT 24"x 36", THEN IT IS A REDUCED SIZE PLOT. USE GRAPHIC SCALE ACCORDINGLY.
2. PROVIDE AND INSTALL ALL SYSTEMS SHOWN UNLESS NOTED OTHERWISE.

KEYED NOTES

1. FLOOR FINISH – AS SCHEDULED
2. CONCRETE LANDING
3. CONCRETE STRUCTURAL WALL – SEALED
4. 4" METAL STUD @ 16" O.C. WITH MINERAL WOOL INSULATION AND 5/8" TYPE 'X' GYPSUM BOARD
5. 6" METAL PANELS WITH MINERAL WOOL INSULATION
6. BRAKEMETAL
7. 1" RIGID INSULATION AT PERIMETER
8. 1/2" EXPANSION JOINT
9. DOUBLE-PANE GLAZING
10. WOOD SHIM AND BACKER ROD WITH SEALANT BOTH SIDES
11. HOLLOW METAL DOOR FRAME WITH JAMB ANCHORS (FULL GROUT)
12. INSULATED METAL DOOR
13. ADA COMPLIANT THRESHOLD SET IN BED OF SEALANT
14. WEATHERSTRIPPING
15. 6" METAL STUDS @ 16" O.C. WITH 5/8" TYPE 'X' GYPSUM BOARD EACH SIDE.
16. 4" METAL STUDS @ 16" O.C. WITH 5/8" TYPE 'X' GYPSUM BOARD EACH SIDE.
17. SEALANT
18. TILE FINISH – SEE ROOM FINISH SCHEDULE, A-7101
19. HOLLOW METAL WINDOW FRAME WITH FRAME ANCHORS (FULL GROUT)

NO	DATE	CLASS REV	ADC	DESCRIPTION	DWN	DES	CHKD	SUB	APP

STATE OF NEW MEXICO
Richard W. Kaselow
2-14-2014
NO. 2648
REGISTERED ARCHITECT

AECOM

RLWTF-UP LOW LEVEL WASTE SUBPROJECT

DOOR AND WINDOW DETAILS

DRAWN	T. VUET
DESIGN	T. LEACH
CHECKED	R. KASELOW
DATE	5/8/14

BLDG. 230 TA-50

SUBMITTED MANNY TARIN

APPROVED FOR RELEASE ED ARTERIA

Los Alamos NATIONAL LABORATORY PO Box 1663 Los Alamos, New Mexico 87545

SHEET A-5101

113 OF 434

CLASSIFICATION REVIEWER DATE

PROJECT ID 100761

DRAWING NO C55864

REV 0

121614

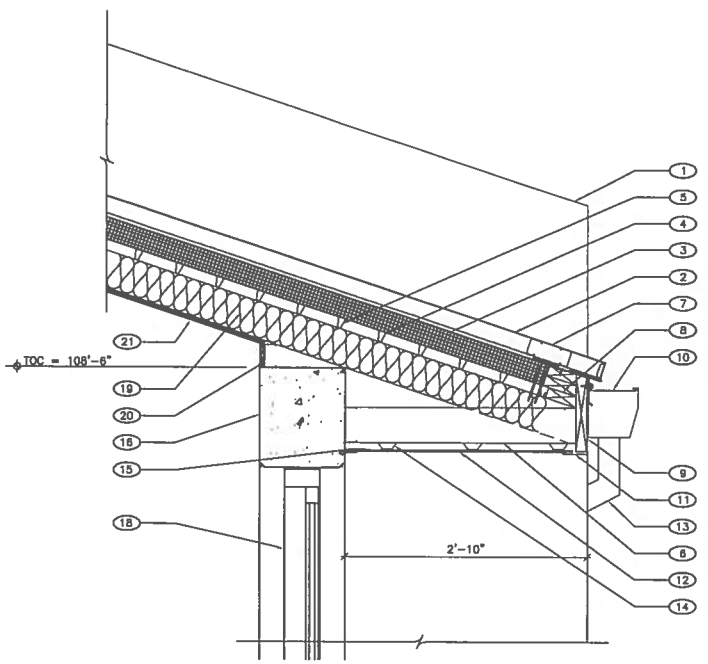

1 DETAIL A-1157

1 1/2"=1'-0"

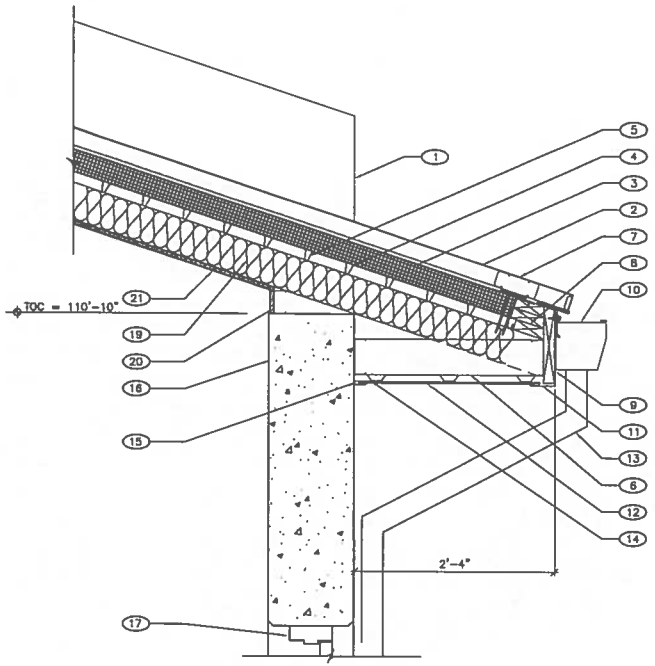

2 DETAIL A-1156

1 1/2"=1'-0"

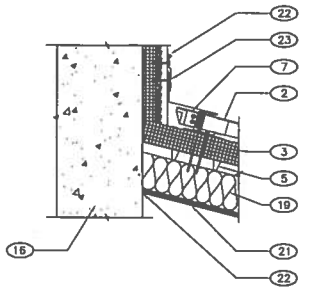

3 A-3102 3 A-1156 3 A-1157 DETAIL

1 1/2"=1'-0"

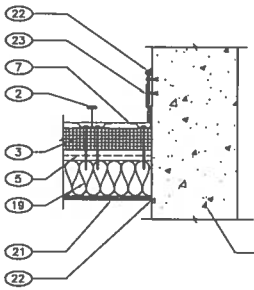

4 A-1156 4 A-1157 DETAIL

1 1/2"=1'-0"

GENERAL NOTES

1. IF THIS SHEET IS NOT 24"x 36", THEN IT IS A REDUCED SIZE PLOT. USE GRAPHIC SCALE ACCORDINGLY.
2. PROVIDE AND INSTALL ALL SYSTEMS SHOWN UNLESS NOTED OTHERWISE.

KEYED NOTES

1. CONCRETE WALL BEYOND
2. STANDING SEAM METAL ROOF SYSTEM
3. 3" – R-15 RIGID POLYISOCYANURATE INSULATION
4. AIR BARRIER
5. 9/16" METAL DECK
6. 6" – 20 GA. METAL FRAMING
7. PANEL CLIP
8. WOOD BLOCKING
9. EAVE TRIM
10. ALUMINUM GUTTER AND STRAP
11. METAL FASCIA TRIM
12. METAL SOFFIT
13. ALUMINUM DOWNSPOUT
14. 7/8" HAT CHANNELS @ 16" O.C.
15. J-CHANNEL
16. 12" CONCRETE WALL
17. HOLLOW METAL DOOR FRAME
18. ALUMINUM STOREFRONT
19. 6" – R-15 BATT INSULATION
20. 2" x 3 1/2" METAL 20 GA. STUDS
21. 5/8" GYPSUM BOARD TYPE 'X'
22. SEALANT
23. COUNTER FLASHING

NO	DATE	CLASS REV	ADC	DESCRIPTION	DWN	DES	CHKD	SUB	APP

AECOM

RLWTF–UP LOW LEVEL WASTE SUBPROJECT

ROOF DETAILS

BLDG. 230 TA–50

DRAWN	T. VUET
DESIGN	T. LEACH
CHECKED	R. KASELOW
DATE	5/8/14

SUBMITTED MANNY TARIN

APPROVED FOR RELEASE ED ARTIGLIA

STATE OF NEW MEXICO Richard W. Kaselow 5-14-2014 NO. 2648 REGISTERED ARCHITECT

Los Alamos NATIONAL LABORATORY PO Box 1663 Los Alamos, New Mexico 87545

SHEET A–5102

114 OF 434

CLASSIFICATION REVIEWER DATE

PROJECT ID 100761

DRAWING NO C55864

REV 0

File: Locus Name: P:_TEC\NEU\ENV\540229\R01 - RLWTF\380 CAD\302 CAD SHEETS\ENV\ADDENDUM\LV FACILITY\A1SHEET\302864-A-5102-R2.DWG Plotted By: BROZAK, DARLENE Plot Date: Wednesday, May 07, 2014 Plot STB File: LMC.STB Page Setup Name: ---- Includes: 1; LTScale: 1.0000000 Measurement: 0;

12165

GENERAL NOTES

1. IF THIS SHEET IS NOT 24"x 36", THEN IT IS A REDUCED SIZE PLOT. USE GRAPHIC SCALE ACCORDINGLY.
2. PROVIDE AND INSTALL ALL SYSTEMS SHOWN UNLESS NOTED OTHERWISE.
3. ATTACH LADDER TO CONCRETE WALL WITH 1/2"ø EPOXY ANCHORS

KEYED NOTES

1. FINISH GRADE
2. TOP OF PARAPET WALL – METAL COPING
3. BUILDING STRUCTURE – 12" THICK CONCRETE STRUCTURAL WALL – SEALED
4. FINISH ROOF
5. STEEL LADDER. PAINT CAUTION YELLOW
6. SIDE RAILS AT CROSS–OVER PLATFORM
7. STEEL CROSS–OVER PLATFORM
8. WALKING PAD ON ROOF
9. LADDER ACCESS GATE – LOCK GFE

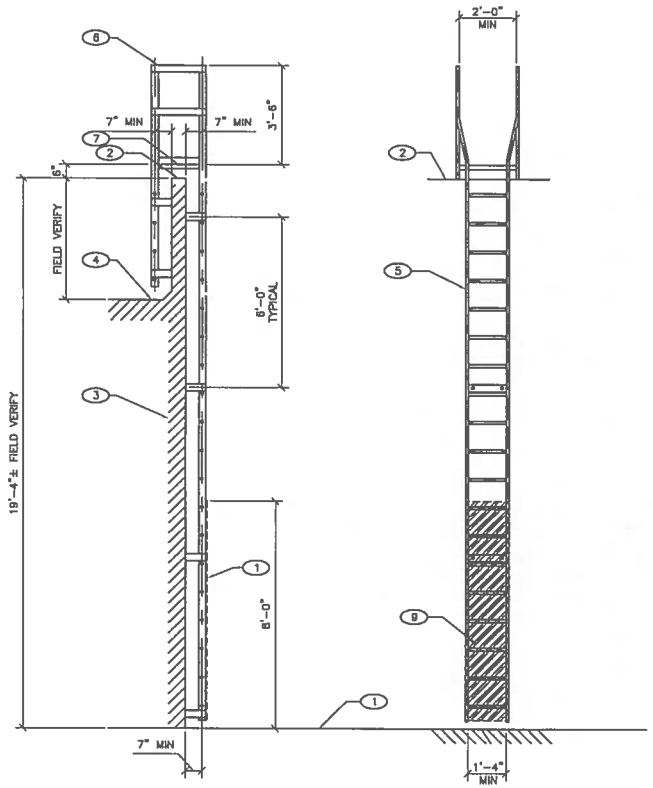

A A A-2100 A-2101 CAGED LADDER DETAIL

1/2"=1'–0"

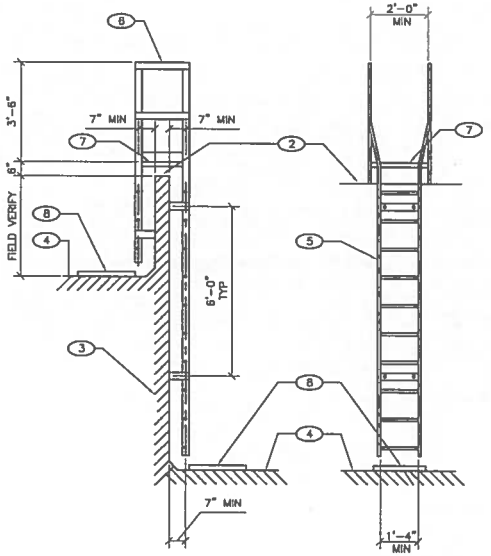

B B A-2100 A-2101 PARAPET LADDER DETAIL

1/2"=1'–0"

STATE OF NEW MEXICO Richard W. Kaselow 5-14-2014 NO. 2648 REGISTERED ARCHITECT

NO	DATE	CLASS REV	ADC	DESCRIPTION	DRW	DES	CHKD	SUB	APP

AECOM

RLWTF–UP LOW LEVEL WASTE SUBPROJECT

LADDER DETAILS

DRAWN	T. VUET
DESIGN	T. LEACH
CHECKED	R. KASELOW
DATE	5/8/14

BLDG. 230 TA–50

SUBMITTED MANNY TARIN

APPROVED FOR RELEASE ED ARTEGUA

Los Alamos NATIONAL LABORATORY PO Box 1663 Los Alamos, New Mexico 87545

SHEET A–5103

115 OF 434

CLASSIFICATION REVIEWER DATE

PROJECT ID 100761

DRAWING NO C55864

REV 0

File: Locs:\Work Pk_TECHNOLOGY\A&E\PROJ - RLWTF\230 CAD\C55 CAD DIRECTORY\ARCCDW\LLV FACILITY\A\SHEET\C55864-A-5103-R0.DWG Plotted By: BROWN, DAVID Plot Date: Wednesday, May 07, 2014 Plot CTB File: LANL.ctb Page Setup Name: — Scale: 1 Units: 1.000000 Measurement: A

69159

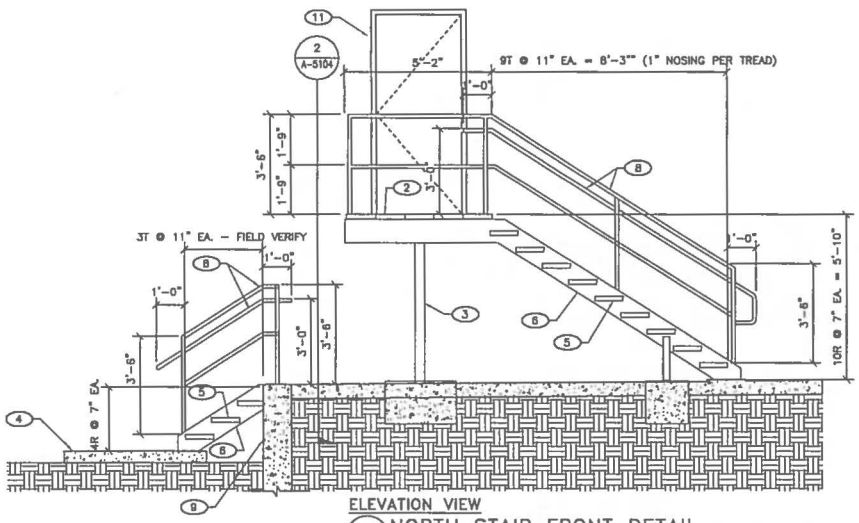

ELEVATION VIEW

1 A-2101 NORTH STAIR FRONT DETAIL

1/2"=1'-0"

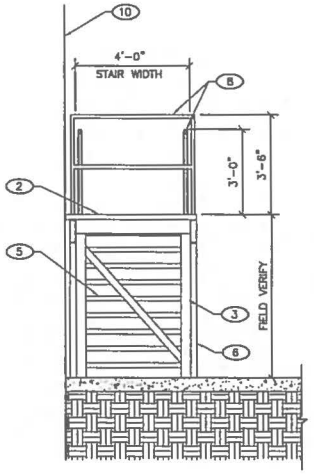

ELEVATION VIEW

2 A-5104 NORTH STAIR SIDE DETAIL

1/2"=1'-0"

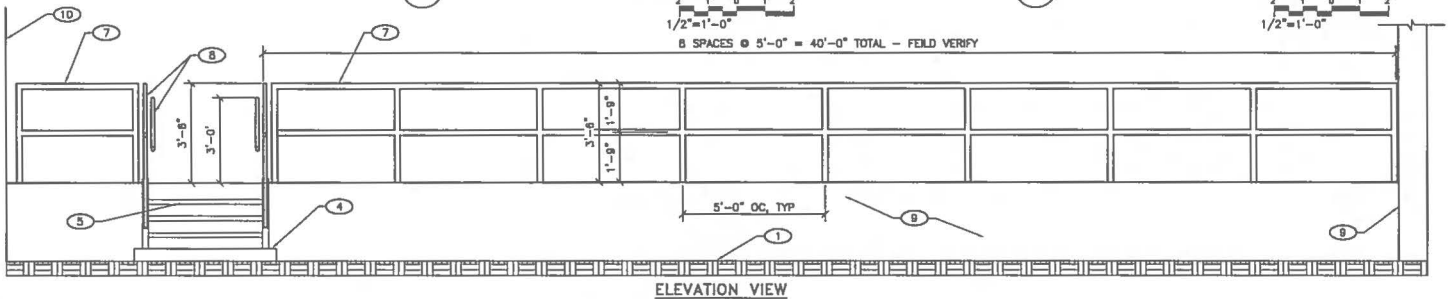

ELEVATION VIEW

3 A-2101 EQUIPMENT YARD GUARDRAIL DETAIL

1/2"=1'-0"

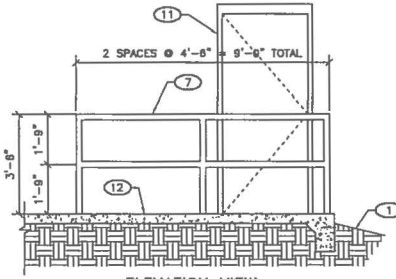

ELEVATION VIEW

4 A-2100 SOUTH EGRESS DETAIL

1/2"=1'-0"

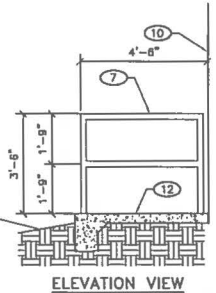

ELEVATION VIEW

5 A-2101 SOUTH EGRESS SIDE DETAIL

1/2"=1'-0"

GENERAL NOTES

1. IF THIS SHEET IS NOT 24"x 36", THEN IT IS A REDUCED SIZE PLOT. USE GRAPHIC SCALE ACCORDINGLY.
2. PROVIDE AND INSTALL ALL SYSTEMS SHOWN UNLESS NOTED OTHERWISE.
3. SEE STRUCTURAL SHEET S-4100 FOR STAIR AND RAILING DETAILS

KEYED NOTES

1. FINISH GRADE
2. FIBER REINFORCED POLYMER (FRP) COVERED LANDING - SEE SHEET S-4100
3. STEEL COLUMN, SEE SHEET S-4100
4. 5'-0" x 5'-0" CONCRETE LANDING
5. FRP COVERED STAIR TREADS - SEE SHEET S-4100
6. STAIR STRINGER - SEE SHEET S-4100
7. STEEL PIPE GUARDRAIL AND POSTS, SEE DETAIL 4/A-5105
8. 1 1/2"ø STEEL PIPE HANDRAIL AND GUARDRAIL, SEE SHEET S-4001
9. CONCRETE RETAINING WALL, SEE SHEET C-4000
10. FACE OF EXTERIOR BUILDING WALL
11. DOOR BEYOND
12. CONCRETE SIDEWALK W/ TURNDOWN

NO	DATE	CLASS REV	ADC	DESCRIPTION	DRN	DES	CHKD	SUB	APP

AECOM

RLWTF-UP LOW LEVEL WASTE SUBPROJECT

RAILING DETAILS

DRAWN T. VUET
DESIGN T. LEACH
CHECKED R. KASELOW
DATE 9/8/14

BLDG. 230 TA-50

SUBMITTED MANNY TARIN
APPROVED FOR RELEASE ED ARTIGLIA

STATE OF NEW MEXICO Richard W. Kaselow 5-14-2014 NO. 2648 REGISTERED ARCHITECT

Los Alamos NATIONAL LABORATORY PO Box 1663 Los Alamos, New Mexico 87545

SHEET A-5104
116 OF 434

CLASSIFICATION REVISION DATE

PROJECT ID 100761
DRAWING NO C55864
REV 0

19127

File: Locs:\Work Pk_TECHNOLOGY\&SERVICES - RLWTF\300 CAD\302 CAD DIRECTORY\ACCDR\LLV FACILITY\A\SHEET\55864-A-5104-R07.DWG Plot Date: Wednesday, May 07, 2014 Plot CTB File: UNLATB Page Setup Name: — Scale: 1.000000 Measurement: IN
Plotted By: BROEMAN, BARBARA

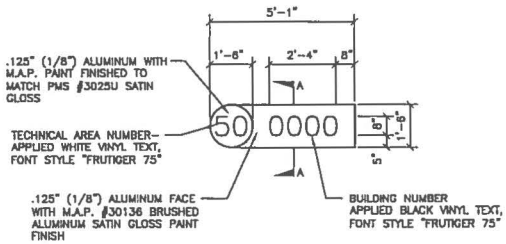

ELEVATION VIEW

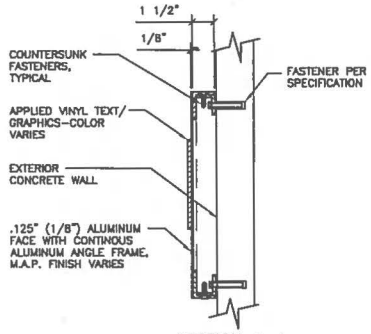

SECTION A-A

1 A-2100 TYPICAL ON-BUILDING IDENTIFICATION SIGN
NOT TO SCALE

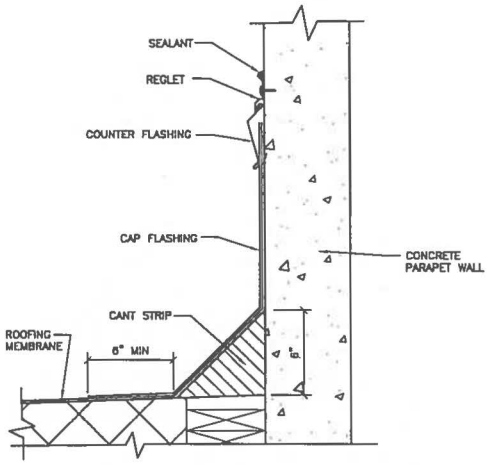

2 A-3101 2 A-3102 ROOF FLASHING DETAIL
3"=1'-0"

GENERAL NOTES

1. PROVIDE AND INSTALL ALL SYSTEMS SHOWN UNLESS NOTED OTHERWISE.

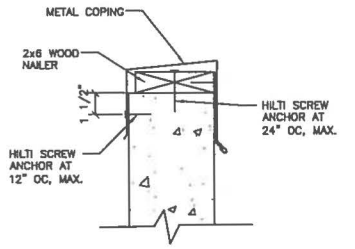

SECTION VIEW

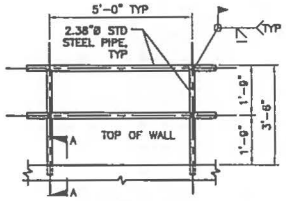

ELEVATION VIEW

NOTE: GUARDRAIL SHALL BE IN CONFORMANCE WITH SPECIFICATION 05 5200.

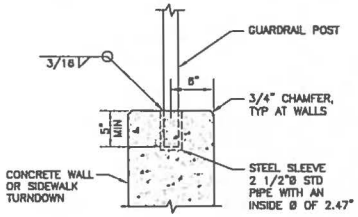

SECTION A-A

3 A-3101 3 A-3102 PARAPET COPING DETAIL
3"=1'-0"

4 A-5104 GUARD RAIL DETAIL
SCALE: NONE

NO	DATE	CLASS REV	ADC	DESCRIPTION	DWN	DES	CHKD	SUB	APP

AECOM

RLWTF-UP LOW LEVEL WASTE SUBPROJECT

MISCELLANEOUS DETAILS

DRAWN T. VUET
DESIGN T. LEACH
CHECKED R. KASELOW
DATE 11/6/14

BLDG. 230 TA-50

SUBMITTED MANNY TARIN
APPROVED FOR RELEASE ED ARTIELLA

Los Alamos NATIONAL LABORATORY PO Box 1663 Los Alamos, New Mexico 87545

SHEET A-5105
117 OF 434

CLASSIFICATION REVIEWER DATE

PROJECT ID 100761
DRAWING NO C55864
REV 0

STATE OF NEW MEXICO Richard W. Kaselow NO. 2648 REGISTERED ARCHITECT

89121 :

File: Locs/Work Pt_TECHNOLOGY_GROUP_RLWTF_UP_LOW_LEVEL_WASTE_FACILITY_PROJECT_C55864_A-5105.RLWTF.dwg Plotted By: BROSMAN, DANIEL Plot Date: Wednesday, May 07, 2014 Plot CTB File: UNLCTB Page Setup Name: ---; Initials: tj; Units: 1.000000 Measurements: ft

DOOR AND FRAME SCHEDULE

MARK	DOOR SIZE WIDTH	DOOR SIZE HEIGHT	DOOR SIZE THICK	DOOR TYPE	DOOR MATL	DOOR GLAZING	FRAME TYPE	FRAME MATL	FRAME DETAIL HEAD	FRAME DETAIL JAMB	FRAME DETAIL THRESHOLD	FIRE RATING LABEL	HARDWARE SET NO	NOTES
1000	6'-0"	7'-2"	1 7/8"	E	AL	DBL	1	AL	2/A-5100	2/A-5100	6/A-5100	---	1	
1000A	6'-0"	7'-2"	1 7/8"	E	AL	DBL	1	AL	3/A-5100	3/A-5100	7/A-5100	---	2	ELEC. STRIKE
1000B	3'-0"	7'-0"	1 3/4"	B	HM	---	1	HM	2/A-5101	2/A-5101	6/A-5101	---	5	
1000C	3'-0"	7'-0"	1 3/4"	B	HM	---	1	HM	2/A-5101	2/A-5101	6/A-5101	---	5	
1001	3'-0"	7'-0"	1 3/4"	B	HM	---	1	HM	2/A-5101	2/A-5101	6/A-5101	---	5	
1002	6'-0"	7'-0"	1 3/4"	D	HM	---	1	HM	3/A-5101	3/A-5101	7/A-5101	---	6	
1003	3'-0"	7'-0"	1 3/4"	A	HM	---	1	HM	3/A-5101	3/A-5101	7/A-5101	---	7	
1005	3'-0"	7'-0"	1 3/4"	A	HM	---	1	HM	2/A-5101	2/A-5101	6/A-5101	---	8	
1008	3'-0"	7'-0"	1 3/4"	A	HM	---	1	HM	2/A-5101	2/A-5101	6/A-5101	---	8	
1009	3'-0"	7'-0"	1 3/4"	A	HM	---	1	HM	1/A-5101	1/A-5101	5/A-5101	---	4	
1010														DECON SHOWER CURTAINS
1011	6'-0"	7'-0"	1 3/4"	C	HM	FIRE RATED	1	HM	11/A-5100	11/A-5100	15/A-5100	45 MIN	9	
1011A	3'-0"	7'-0"	1 3/4"	A	HM	---	1	HM	10/A-5100	10/A-5100	14/A-5100	---	4	
1011B	3'-0"	7'-0"	1 3/4"	A	HM	---	1	HM	10/A-5100	10/A-5100	14/A-5100	---	4	
1011C	10'-0"	13'-0"	1"	F	STL	---	N/A	STL	9/A-5100	13/A-5100	---	---	SEE SPECS	
1012	6'-0"	7'-0"	1 3/4"	C	HM	---	1	HM	3/A-5101	4/A-5101	7/A-5101	---	6	
1014	6'-0"	7'-0"	1 3/4"	D	HM	---	1	HM	1/A-5101	1/A-5101	5/A-5101	---	3	
1016	6'-0"	7'-0"	1 3/4"	D	HM	---	1	HM	1/A-5101	1/A-5101	5/A-5101	---	3	
1018	6'-0"	7'-0"	1 3/4"	D	HM	---	1	HM	1/A-5101	1/A-5101	5/A-5101	---	3	

DOOR FRAME TYPES

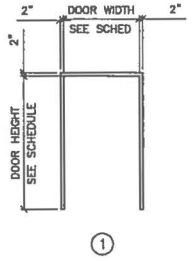

(1)

WINDOW TYPES

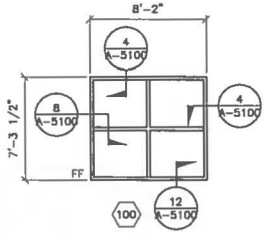

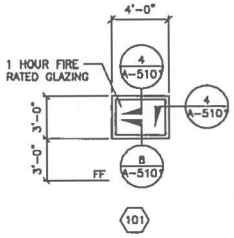

DOOR TYPES

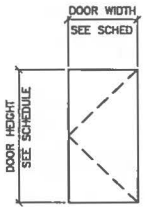

(A)

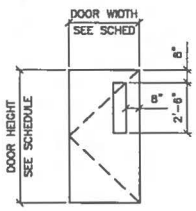

(B)

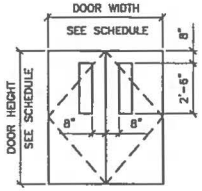

(C)

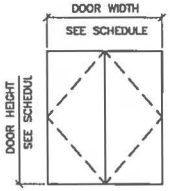

(D)

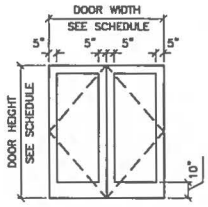

(E)

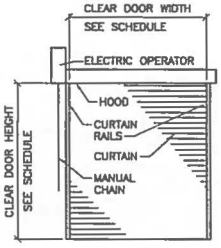

(F)

GENERAL NOTES

1. IF THIS SHEET IS NOT 24"x 36", THEN IT IS A REDUCED SIZE PLOT. USE GRAPHIC SCALE ACCORDINGLY.
2. PROVIDE AND INSTALL ALL SYSTEMS SHOWN UNLESS NOTED OTHERWISE.
3. FIRE RESISTIVE GLAZING (FRG) PER SPECIFICATION 08 8117 SHALL BE 60 MIN IN 45 MINUTE DOOR ASSEMBLY
4. UNLESS OTHERWISE NOTED. DOORS AND WINDOWS SHALL NOT HAVE WIRED GLAZING.

KEYED NOTES

(1) OVERHEAD COILING DOOR SIZES SCHEDULED ARE THE CLEAR WIDTHS AND HEIGHTS REQUIRED. PROVIDE CURTAIN/JAMB RAIL CONFIGURATION MEETING THOSE REQUIREMENTS.

(2) OVERHEAD COILING DOOR MOUNTING:
- A. EXTERIOR OVERHEAD COILING DOORS ARE SURFACE MOUNTED ON THE INTERIOR FACE OF THE BUILDING.

(3) OVERHEAD COILING DOOR ELEVATIONS ARE SHOWN FROM INSIDE (I.E., FROM THE HOOD SIDE). OPERATOR TYPES INDICATED IN THE SCHEDULES UNDER THE NOTES COLUMN ARE:
- A. DRE-L: DOOR ROLL-UP ELECTRIC – OPERATOR ON LEFT
- B. DRE-R: DOOR ROLL-UP ELECTRIC – OPERATOR ON RIGHT
- C. DRM-L: DOOR ROLL-UP MANUAL – OPERATOR ON LEFT

NO	DATE	CLASS REV	ADC	DESCRIPTION	DWN	DES	CHKD	SUB	APP

AECOM

RLWTF-UP LOW LEVEL WASTE SUBPROJECT

DOOR AND WINDOW SCHEDULE

BLDG. 230 TA-50

SUBMITTED MANNY TARIN

APPROVED FOR RELEASE ED ARTIOLA

DRAWN T. VUET

DESIGN T. LEACH

CHECKED R. KASELOW

DATE 8/8/14

Los Alamos NATIONAL LABORATORY PO Box 1663 Los Alamos, New Mexico 87545

SHEET A-7100

118 OF 434

CLASSIFICATION REVISER DATE

PROJECT ID 100761

DRAWING NO C55864

REV 0

STATE OF NEW MEXICO Richard W. Kaselow 5-14-2014 NO. 2648 REGISTERED ARCHITECT

File Location: P:_TECHNOLOGY\GRZ\PROJECTS - RLWTF\300 CAD\300 CAD DIRECTORY\MECHANICAL\V FACILITY\A-7100\A-7100-1-A-7100-RLWTF-R1.DWG
Plotted By: BRODMAN, DARLENE Plot Date: Wednesday, May 07, 2014 Plot CTB File: UNLISTED Page Setup Name: ---- Initiation: 1; Measurement: IN

551219

ROOM FINISH SCHEDULE

ROOM		WALLS				FLOOR	CEILING	
NUMBER	NAME	N	S	E	W		MATL	HEIGHT
1000	VESTIBULE	C|C	C|C	C|C	C|C	C|C	C|C	SLOPED
1000A	LOBBY	GB|P	GB|P	GB|P	GB|P	SV	GB|P	9'-0"
1000B	CORRIDOR	GB|P	GB|P	GB|P	GB|P	SV	GB|P	9'-0"
1000C	CORRIDOR	GB|P	GB|P	GB|P	GB|P	SV	GB|P	9'-0"
1001	OPERATIONS CENTER	GB|P	GB|P	GB|P	GB|P	VCT	GB|P	9'-0"
1002	COMM ROOM	PW|GB|P	PW|GB|P	PW|GB|P	PW|GB|P	VCT	SMC	9'-0"
1003	JANITOR	GB|P	GB|P	GB|P	GB|P	SV	GB|P	9'-0"
1005	MEN'S LAVATORY	TC	TC	TC	TC	TP	GB|P	9'-0"
1006	WOMEN'S LAVATORY	TC	TC	TC	TC	TP	GB|P	9'-0"
1009	CORRIDOR	GB|P	GB|P	GB|P	GB|P	SV	GB|P	9'-0"
1010	DECON SHOWER	TC	TC	TC	TC	TP	GB|P	8'-0"
1011	LLW PROCESS AREA	GB|MP	GB|MP	GB|MP	GB|MP	C|C	EX	18'-0"
1012	WET LAB	GB|P	GB|P	GB|P	GB|P	SV	GB|P	9'-0"
1014	ELECTRICAL ROOM	C|P	GB|P	GB|P	GB|P	C|P	EX	9'-0"
1016	FIRE RISER ROOM	C|P	C|P	C|P	C|P	C|P	EX	SLOPED
1018	VACUUM PUMP ROOM	C|P	C|P	C|P	C|P	C|P	EX	SLOPED

FINISH SCHEDULE LEGEND (NOT ALL FINISHES USED IN THIS BUILDING)	
C|C	CONCRETE PAINTED WITH INDUSTRIAL COATING
C|P	PAINTED CONCRETE
EX	EXPOSED STRUCTURE – NO FINISH
GB|C	GYPSUM BOARD WITH INDUSTRIAL COATING
GB|MP	GYPSUM BOARD WITH METAL PANEL
GB|P	PAINTED GYPSUM BOARD
GR	STEEL GRATING
GR|C|C	STEEL GRATING SUSPENDED ABOVE CONCRETE FLOOR. CONCRETE FLOOR TO HAVE INDUSTRIAL COATING
NA	NOT APPLICABLE (NO SURFACE)
PW|C|P	PAINTED FIRE RESISTANT TREATED 3/4" PLYWOOD FROM FINISH FLOOR TO 8'-0" AFF OVER PAINTED CONCRETE. THE PAINTED PORTION OF THE CONCRETE SHALL EXTEND, AS A MINIMUM, TO THE STAINLESS STEEL CEILING.
PW|GB|P	PAINTED FIRE RESISTANT TREATED 3/4" PLYWOOD FROM FINISH FLOOR TO 8'-0" AFF OVER PAINTED GYPSUM BOARD. THE PAINTED PORTION OF THE GYPSUM BOARD SHALL EXTEND, AS A MINIMUM, TO THE STAINLESS STEEL CEILING.
SC	SEALED CONCRETE
SMC	STAINLESS STEEL SHEET METAL CEILING
SV	SHEET VINYL FLOORING
SVA	ANTI-STATIC VINYL FLOORING
TC	CERAMIC TILE
TP	PORCELAIN FLOORING TILE
TRC	TRAFFIC COATING
VCT	VINYL COMPOSITION TILE

GENERAL NOTES

1. PROVIDE AND INSTALL ALL SYSTEMS SHOWN UNLESS NOTED OTHERWISE.
2. EXPOSED INTERIOR WALL OR CEILINGS, INCLUDING CEILINGS FORMED BY THE UNDERSIDE OF ROOFS, AND ANY FACTORY-INSTALLED WALL OR FACING MATERIAL, SHALL HAVE A UL-LISTED/FM-APPROVED FLAME SPREAD RATING OF 25 OR LESS AND A SMOKE DEVELOPED RATING OF 50 OR LESS, PER ASTM E-84. THIS REQUIREMENT DOES NOT APPLY TO UNPAINTED STEEL OR CONCRETE.

STATE OF NEW MEXICO
Richard W. Kaselow
5-14-2014
NO. 2648
REGISTERED ARCHITECT

NO	DATE	CLASS REV	ADC	DESCRIPTION	DWN	DES	CHKD	SUB	APP

AECOM

RLWTF-UP LOW LEVEL WASTE SUBPROJECT

ROOM FINISH SCHEDULE

DRAWN T. VUIET
DESIGN T. LEACH
CHECKED R. KASELOW
DATE 5/8/14

BLDG. 230 TA-50

SUBMITTED MANNY TARIN
APPROVED FOR RELEASE ED ARTIGLIA

Los Alamos NATIONAL LABORATORY
PO Box 1663 Los Alamos, New Mexico 87545

SHEET A-7101
119 OF 434

CLASSIFICATION REVIEWER DATE

PROJECT ID 100761
DRAWING NO C55864
REV 0

File: Locs Store PVL_TECHNOLOGY\ARCHIVES - RLVTF\300 CAMPUS CAD DIRECTORY-ACCEPTED\LLW FACILITY\A\SHEET\55864-A-7101-RLB.DWG
Pulled By: BRZEZINSKI, DARLENE; Pltd Date: Wednesday, May 07, 2014; Pltd CTB File: LANL.CTB; Page Setup Name: ——; Installed: 1; LScale: 1.000000000; Measurements: M;

121170

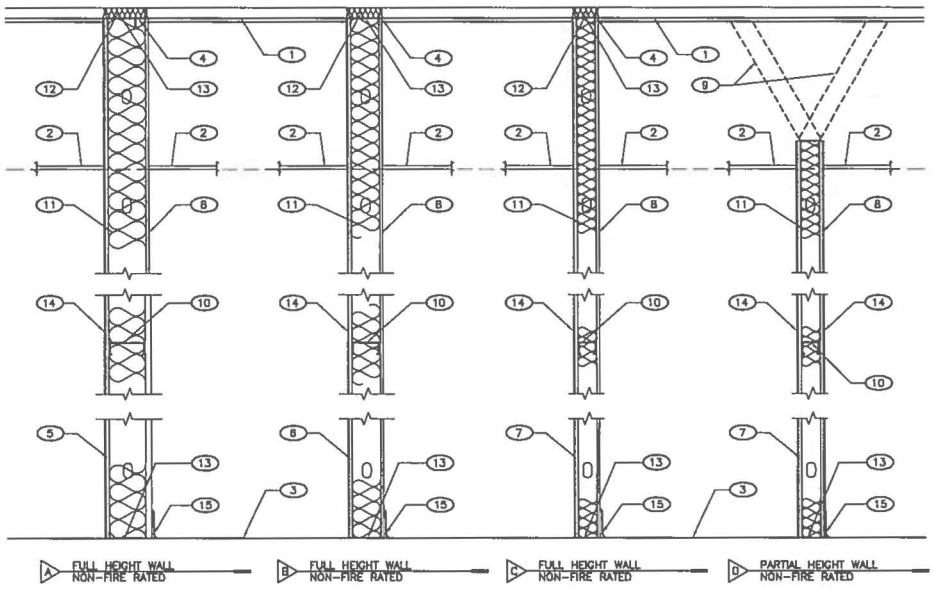

GENERAL NOTES

1. PROVIDE AND INSTALL ALL SYSTEMS SHOWN UNLESS NOTED OTHERWISE.
2. ALL GYPSUM BOARD IS TYPE 'X' UNLESS OTHERWISE NOTED.

KEYED NOTES

(1) STRUCTURAL DECK
(2) LINE OF CEILING. SEE ROOM FINISH SCHEDULE
(3) FINISH FLOOR
(4) SEALANT AND INSULATION AT STRUCTURAL DECK
(5) 20 GA. 6" METAL STUDS AT 16" O.C.
(6) 20 GA. 6" METAL STUDS AT 16" O.C.
(7) 20 GA. 4" METAL STUDS AT 16" O.C.
(8) 1 LAYER 5/8" TYPE 'X' GYPSUM BOARD
(9) KICKERS
(10) BRACING AT 54" O.C. VERTICAL
(11) ACOUSTIC INSULATION INSTALLED FULL HEIGHT
(12) ACOUSTIC SEALANT AND SOUND BATT INSULATION AT DECK
(13) PROVIDE MATCHING TRACK AT BOTTOM AND DOUBLE SLIP-FIT TRACKS AT TOP OF METAL STUDS
(14) CERAMIC TILE AND TILE BASE ON WATER RESISTANT TYPE 'X' GYPSUM BOARD
(15) RESILIENT BASE (BOTH SIDES WHERE APPLIES)

NO	DATE	CLASS REV	ADC	DESCRIPTION	DRN	DES	CHKD	SUB	APP

AECOM

RLWTF-UP LOW LEVEL WASTE SUBPROJECT

PARTITION TYPES SCHEDULE

DRAWN	T. VUET
DESIGN	T. LEACH
CHECKED	R. KASELOW
DATE	5/9/14

BLDG. 230 TA-50

SUBMITTED MANNY TARIN

APPROVED FOR RELEASE ED ARTIGLIA

Richard W. Kaselow 5-14-2014 NO. 2648 REGISTERED ARCHITECT STATE OF NEW MEXICO

Los Alamos NATIONAL LABORATORY PO Box 1663 Los Alamos, New Mexico 87545

SHEET A-7102

120 OF 434

CLASSIFICATION REVIEWER DATE

PROJECT ID 100761

DRAWING NO C55864

REV 0

FILED:

File: Local Mirror P:_TECHNOLOGY\55279621 - RLVTF\550 CAD\550 CAD DIRECTORY\ACCONLLV FACILITY\ASHEET\C55864-A-7102-REV0.dgn Plotted By: BRIDEMAN, DARLENE Plot Date: Wednesday, May 07, 2014 Plot CTB File: UNLIGN Page Setup Name: ——; IndiMin: 1; 1/Scale: 1.000000000 Measurement: ft

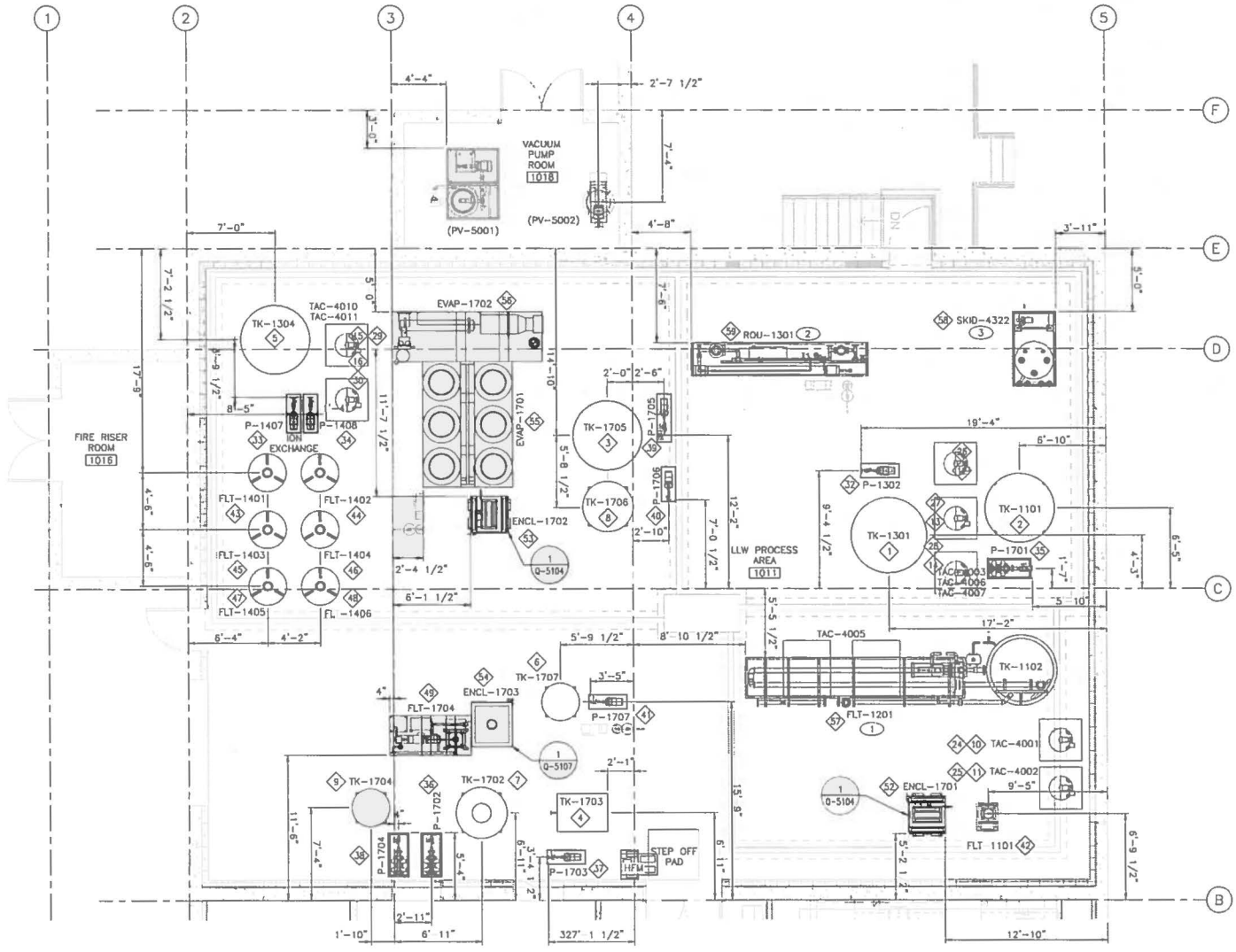

EQUIPMENT PLAN – NORTH

1/4"=1'-0"

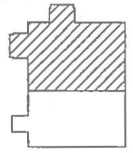

KEY PLAN

SCALE: NONE

GENERAL NOTES

1. IF THIS SHEET IS NOT 24"x 36", THEN IT IS A REDUCED SIZE PLOT. USE GRAPHIC SCALE ACCORDINGLY.
2. ALL CHEMICAL DOSING TANKS (TAC-4001 THRU TAC-4011) HAVE A PUMP (P-4001 THRU P-4011) MOUNTED ON TOP.
3. REFER TO Q-71XX SHEETS FOR EQUIPMENT DATA.

KEYED NOTES

1. SKID INCLUDES CIP SYSTEM AND PUMP P-1201.
2. SKID INCLUDES PUMP P-1303.
3. SKID INCLUDES TAC-4302 AND PAC-4301.

NO	DATE	CLASS REV	ADC	DESCRIPTION	DWN	DES	CHKD	SUB	APP

AECOM

RLWTF-UP LOW LEVEL WASTE SUBPROJECT

PROCESS EQUIPMENT PLAN – NORTH

BLDG. 230 TA-50

DRAWN	V DAVISON
DESIGN	S MOORE
CHECKED	C MOYERS
DATE	5/8/14

SUBMITTED: MANNY TARIN

APPROVED FOR RELEASE: ED ARTIGLIA

Los Alamos NATIONAL LABORATORY PO Box 1663 Los Alamos, New Mexico 87545

SHEET Q-1101

121 OF 434

CLASSIFICATION | REVIEWER | DATE

PROJECT ID 100761 | DRAWING NO C55864 | REV 0

CHARLES MOYERS NEW MEXICO 18830 LICENSED PROFESSIONAL ENGINEER

05-08-14

File Location: P:\RLWTF LOW-LEVEL WASTE FACILITY\500 CAD\C55864 MAIN BUILDING\SHEETS\11 EQUIPMENT\55864-Q-1101-R0.DWG
Plotted By: MOORE, STEPHEN Plot Date: Monday, May 05, 2014

: 121172

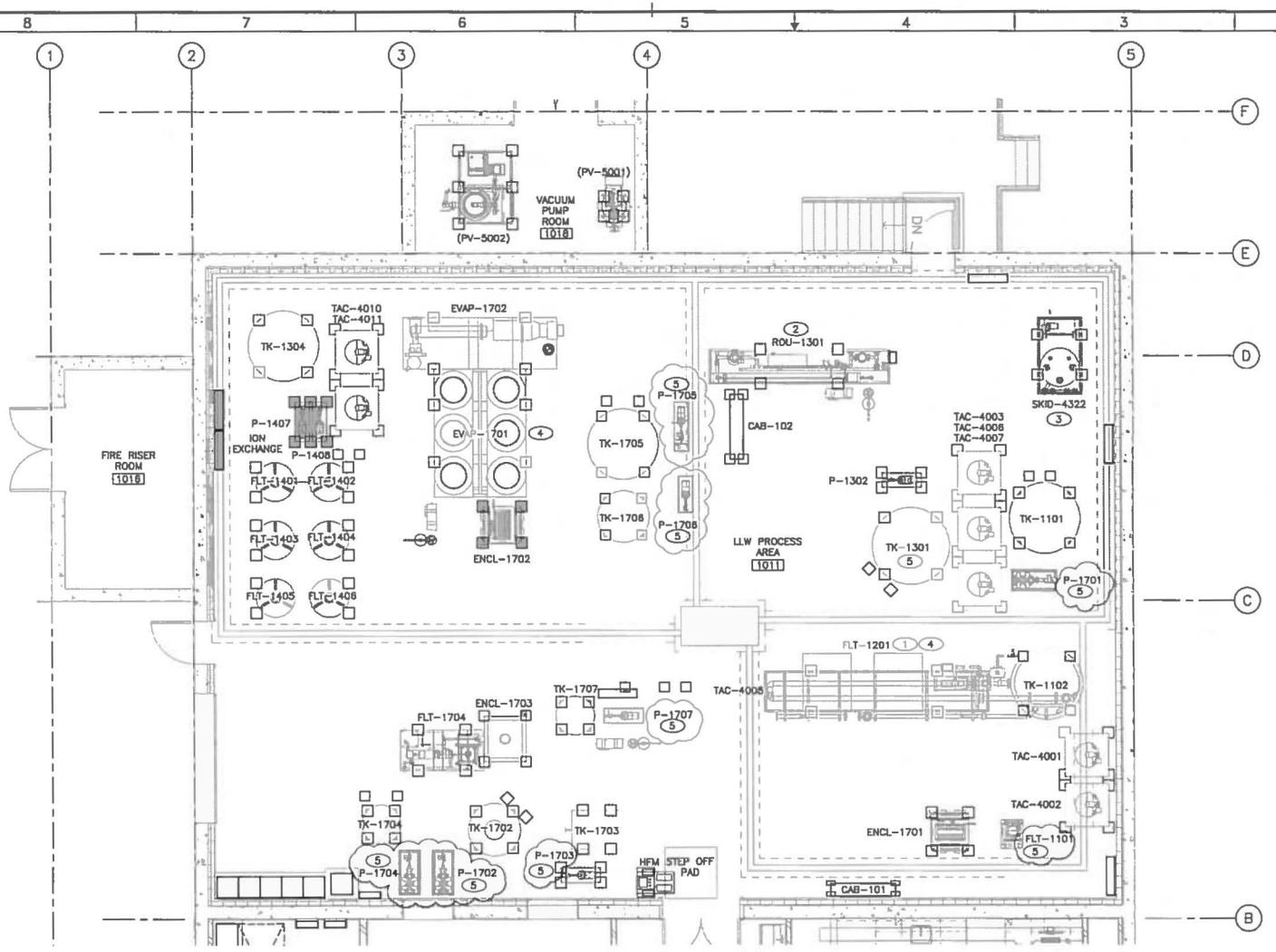

EMBEDMENT PLATE PLAN – NORTH

1/4"=1'-0"

KEY PLAN
SCALE: NONE

GENERAL NOTES

1. IF THIS SHEET IS NOT 24"x 36", THEN IT IS A REDUCED SIZE PLOT. USE GRAPHIC SCALE ACCORDINGLY.
2. ALL CHEMICAL DOSING TANKS (TAC-4001 THRU TAC-4011) HAVE A PUMP (P-4001 THRU P-4011) MOUNTED ON TOP.
3. SEE SHEETS Q-4100 THROUGH Q-4103 FOR EMBEDMENT PLATE LOCATIONS.
4. COORDINATE LOCATION OF EMBED PLATES WITH VENDORS AND ENSURE A 5" MINIMUM DISTANCE FROM CONCRETE EDGE TO EDGE OF PLATE, AND A 5" MINIMUM EDGE DISTANCE TO SCREW ANCHORS.
5. SECURE ALL EQUIPMENT BASES TO EMBED PLATES WITH 1/4" FILLET WELD, 1" LONG, +/– 2" WITHIN CENTER OF THE EMBED PLATE, WITH EXCEPTION OF FLT-1201, EVAP-1701, (SEE KEYED NOTE 4).

KEYED NOTES

1. SKID INCLUDES CIP SYTEM AND PUMP P-1201.
2. SKID INCLUDES PUMP P-1303.
3. SKID INCLUDES TAC-4302 AND PAC-4301.
4. SEE GENERAL NOTE 5, USE 1/4" FILLET 1 1/2" LONG.
5. SECURE TO SLAB WITH (4) HILTI KH-EZ 1/2"ø x H_{nom} = 4 1/4" SCREW ANCHORS.

NO	DATE	CLASS REV	ADC	DESCRIPTION	DRN	DES	CHKD	SUB	APP
1	7/7/14	U		REMOVED EMBED PLATES, ADDED KH 5	MT	MT	MT	MT	

AECOM

RLWTF-UP LOW LEVEL WASTE SUBPROJECT

EMBEDMENT PLATE PLAN – NORTH

DRAWN	V DAVISON
DESIGN	S MOORE
CHECKED	C MOYERS
DATE	5/8/14

BLDG. 230 TA-50

SUBMITTED: MANNY TARIN

APPROVED FOR RELEASE: ED ARTIDUA

Los Alamos NATIONAL LABORATORY PO Box 1663 Los Alamos, New Mexico 87545

SHEET Q-1102

122 OF 434

CLASSIFICATION | REVIEWER | DATE

PROJECT ID 100761

DRAWING NO C55864

REV 1

CHARLES MOYERS NEW MEXICO 10830 REGISTERED PROFESSIONAL ENGINEER 7-7-14

File Location: W:\PLOT LOW-LEVEL WASTE FACILITY\300 CAD\C55864 MAIN BUILDING\SHEETS\11 EQUIPMENT\C55864-Q-1102-R1.DWG
Plotted By: DALLIZOS, ALAN Plot Date: Thursday, July 03, 2014

121173

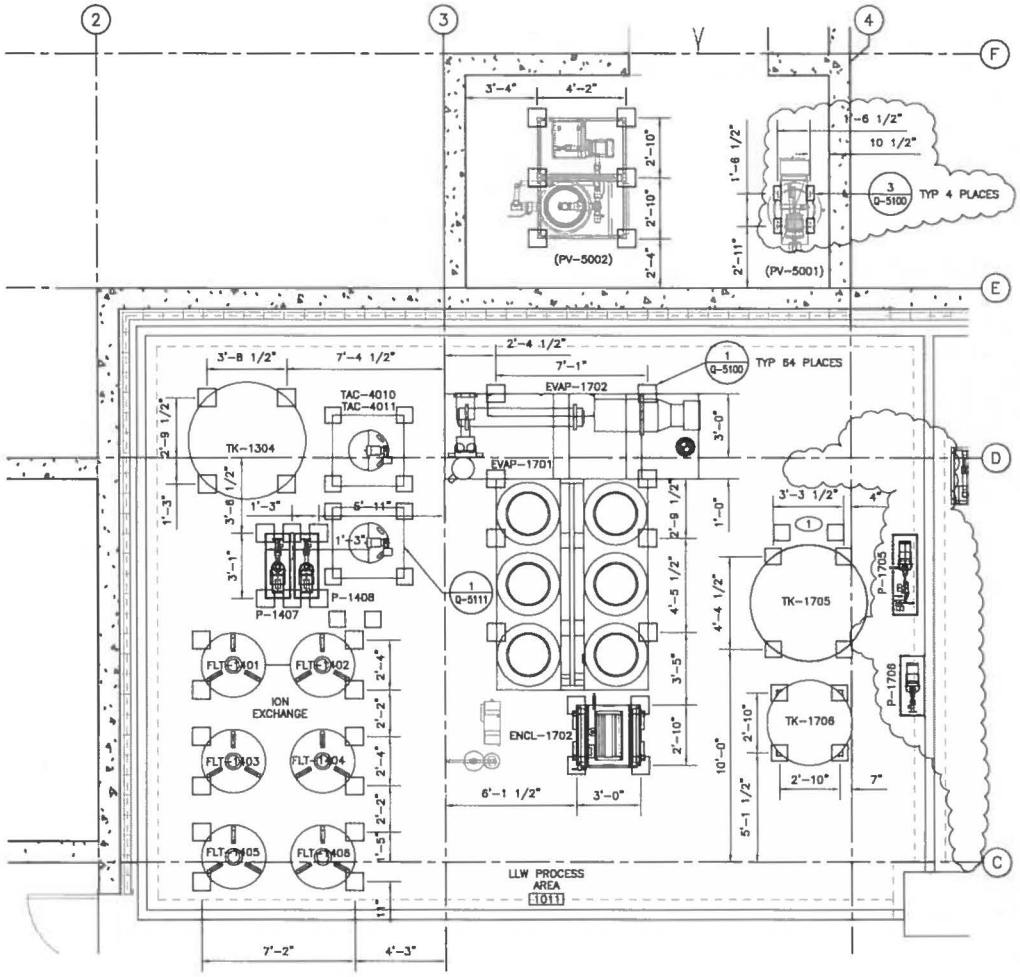

PROCESS BAY ENLARGED PLAN

3/8"=1'-0"

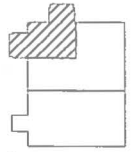

KEY PLAN

SCALE: NONE

GENERAL NOTES

1. IF THIS SHEET IS NOT 24"x 36", THEN IT IS A REDUCED SIZE PLOT. USE GRAPHIC SCALE ACCORDINGLY.
2. COORDINATE LOCATION OF EMBED PLATES WITH VENDORS AND ENSURE A 5" MINIMUM DISTANCE FROM CONCRETE EDGE TO EDGE OF PLATE, AND A 5" MINIMUM EDGE DISTANCE TO SCREW ANCHORS.
3. SECURE EQUIPMENT BASES TO EMBED PLATES WITH 1/4" FILLET WELD, 1-1/2" LONG, AND +/- 2" WITHIN CENTER OF EMBED PLATE.

KEYED NOTES

1. EMBED PLATES NOT DIMENSIONED ARE FOR SUPPORT EQUIPMENT AND SHALL BE PLACED APPROXIMATELY WHERE SHOWN.

NO	DATE	CLASS REV	ADC	DESCRIPTION	DWN	DES	CHKD	SUB	APP
1	7/7/14	U		REVISED/REMOVED EMBED PLATES					

AECOM

RLWTF-UP LOW LEVEL WASTE SUBPROJECT

PROCESS BAY ENLARGED PLAN

BLDG. 230 TA-50

DRAWN	V DAVISON
DESIGN	S MOORE
CHECKED	B SHREEVE
DATE	5/6/14

SUBMITTED: MANNY TARIN

APPROVED FOR RELEASE: ED ARTIGLIA

Los Alamos NATIONAL LABORATORY PO Box 1663 Los Alamos, New Mexico 87545

SHEET Q-4100

123 OF 434

CLASSIFICATION | REVIEWER | DATE

PROJECT ID 100761 | DRAWING NO C55864 | REV 1

7-7-14

File Location: W:\RLWTF LOW-LEVEL WASTE FACILITY\500 CAD\C55864 MAIN BUILDING\SHEETS\11 EQUIPMENT\55864-Q-4100-R1.DWG
Plotted By: CALLEGOS, ALAN Plot Date: Thursday, July 03, 2014

121714

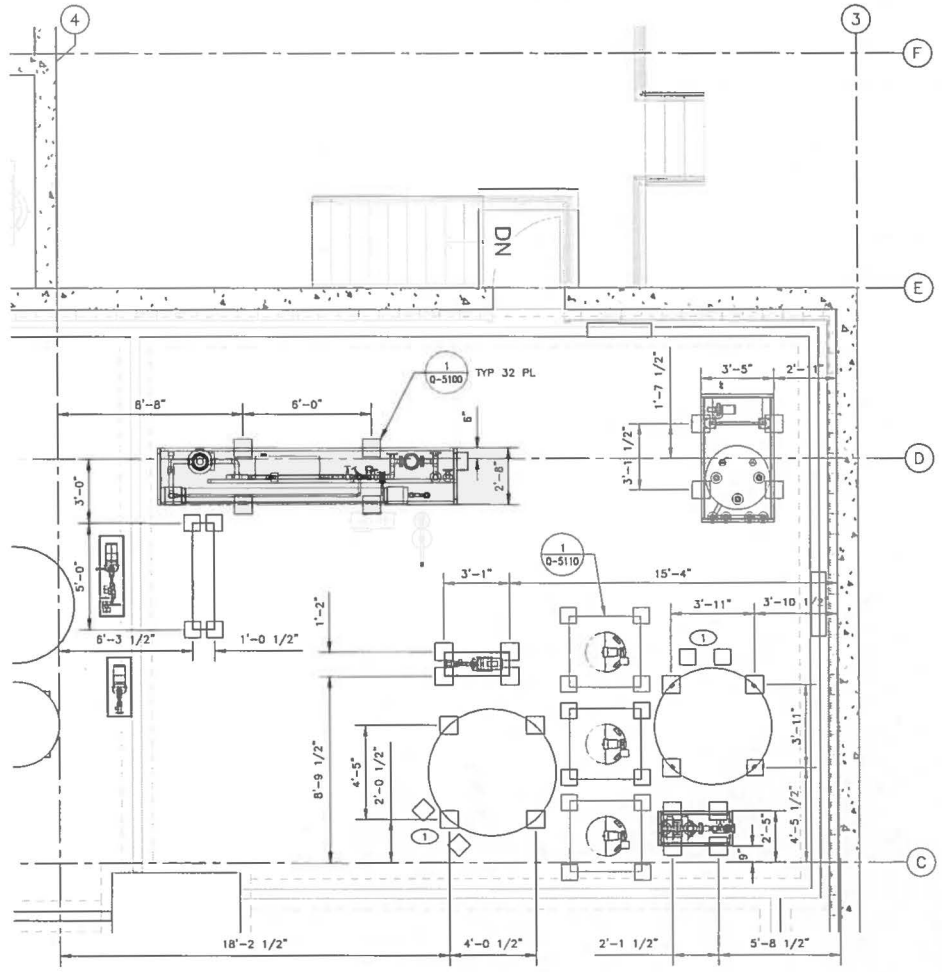

PROCESS BAY ENLARGED PLAN

1' 0 1' 2' 3' 4'

3/8"=1'-0"

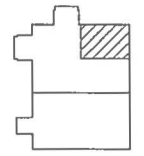

KEY PLAN

SCALE: NONE

GENERAL NOTES

1. IF THIS SHEET IS NOT 24"x 36", THEN IT IS A REDUCED SIZE PLOT. USE GRAPHIC SCALE ACCORDINGLY.
2. COORDINATE LOCATION OF EMBED PLATES WITH VENDORS AND ENSURE A 5" MINIMUM DISTANCE FROM CONCRETE EDGE TO EDGE OF PLATE, AND A 4" MINIMUM EDGE DISTANCE TO SCREW ANCHORS.

KEYED NOTES

(1) EMBED PLATES NOT DIMENSIONED ARE FOR SUPPORT EQUIPMENT AND SHALL BE PLACED APPROXIMATELY WHERE SHOWN.

NO	DATE	CLASS REV	ADC	DESCRIPTION	DWN	DES	CHKD	SUB	APP

AECOM

RLWTF-UP LOW LEVEL WASTE SUBPROJECT

PROCESS BAY ENLARGED PLAN

DRAWN	V DAVISON
DESIGN	S. MOORE
CHECKED	C MOYERS
DATE	5/8/14

BLDG. 230 TA-50

SUBMITTED MANNY TARIN

APPROVED FOR RELEASE ED ARTIGLIA

Los Alamos NATIONAL LABORATORY PO Box 1663 Los Alamos, New Mexico 87545

SHEET Q-4101

124 OF 434

CLASSIFICATION REVIEWER DATE

PROJECT ID 100761

DRAWING NO C55864

REV 0

CHARLES MOYERS NEW MEXICO 16838 REGISTERED PROFESSIONAL ENGINEER 05-04-14

File Location: P:\RLWTF LOW-LEVEL WASTE FACILITY\300 CAD\C55864 MAIN BUILDING\SHEETS\11 EQUIPMENT\55864-Q-4101.MCD.DWG
Plotted By: MOORE, STEPHEN Plot Date: Monday, May 05, 2014

51121 :

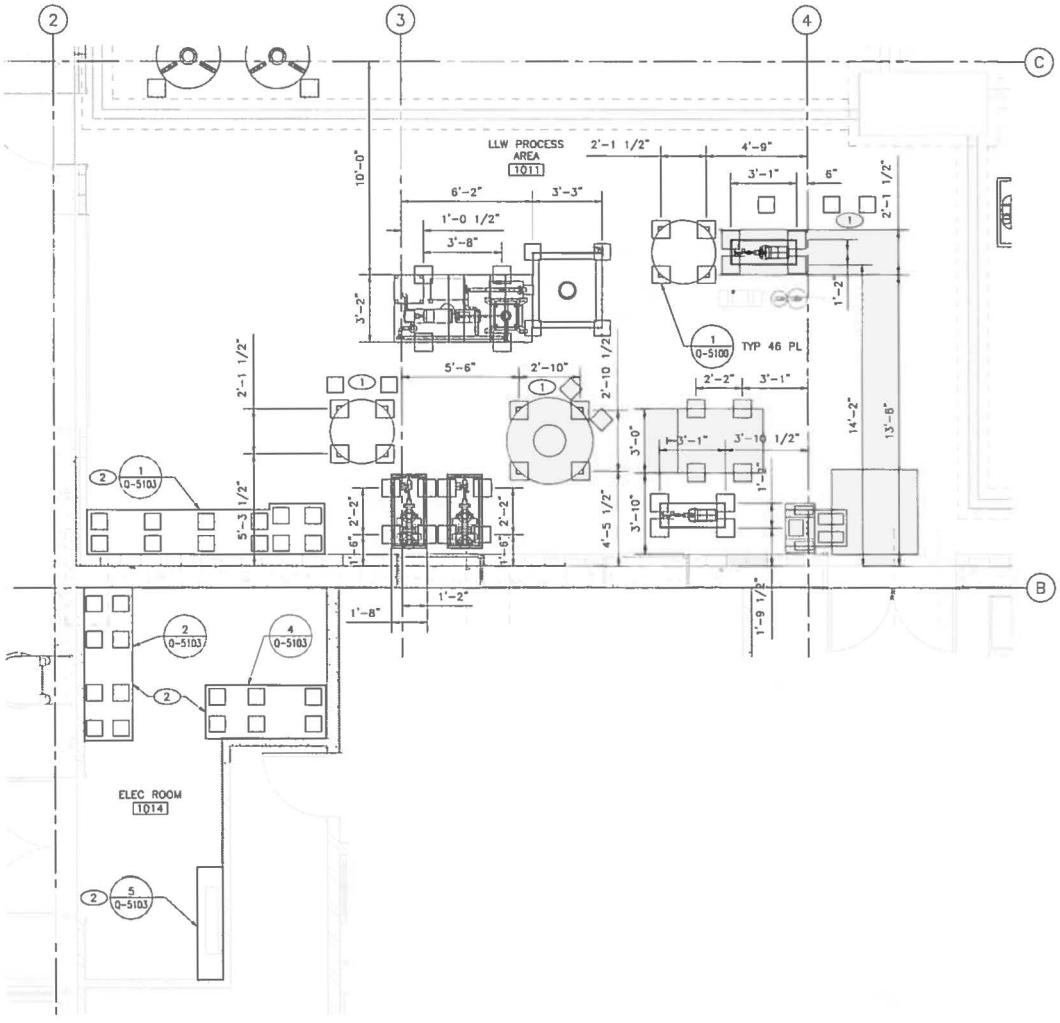

PROCESS BAY ENLARGED PLAN

1' 0 1' 2' 3' 4'

3/8"=1'-0"

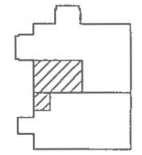

KEY PLAN
SCALE: NONE

GENERAL NOTES

1. IF THIS SHEET IS NOT 24"x 36", THEN IT IS A REDUCED SIZE PLOT. USE GRAPHIC SCALE ACCORDINGLY.
2. COORDINATE LOCATION OF EMBED PLATES WITH VENDORS AND ENSURE A 5" MINIMUM DISTANCE FROM CONCRETE EDGE TO EDGE OF PLATE, AND A 4" MINIMUM EDGE DISTANCE TO SCREW ANCHORS.

KEYED NOTES

(1) EMBED PLATES NOT DIMENSIONED ARE FOR SUPPORT EQUIPMENT AND SHALL BE PLACED APPROXIMATELY WHERE SHOWN.

(2) 5" HOUSEKEEPING PADS FOR ELECTRICAL EQUIPMENT, REFER TO SHEET S-5100 DETAIL 3.

NO	DATE	CLASS REV	ADC	DESCRIPTION	DWN	DES	CHKD	SUB	APP

AECOM

RLWTF-UP LOW LEVEL WASTE SUBPROJECT

PROCESS BAY ENLARGED PLAN

DRAWN	W. DAVIDSON
DESIGN	S. MOORE
CHECKED	C. MOYERS
DATE	5/8/14

BLDG. 230 TA-50

SUBMITTED MANNY TARIN

APPROVED FOR RELEASE ED ARTIGLIA

Los Alamos NATIONAL LABORATORY PO Box 1663 Los Alamos, New Mexico 87545

SHEET Q-4102

125 OF 434

CLASSIFICATION REVIEWER DATE

PROJECT ID 100761

DRAWING NO C55864

REV 0

05-07-14

File Location: P:\RLWTF LOW-LEVEL WASTE FACILITY\300 CAD\C55864 MAIN BUILDING\SHEETS\11 EQUIPMENT\55864-Q-4102-R0.DWG
Plotted By: MOORE, STEPHEN Plot Date: Monday, May 05, 2014

91121:

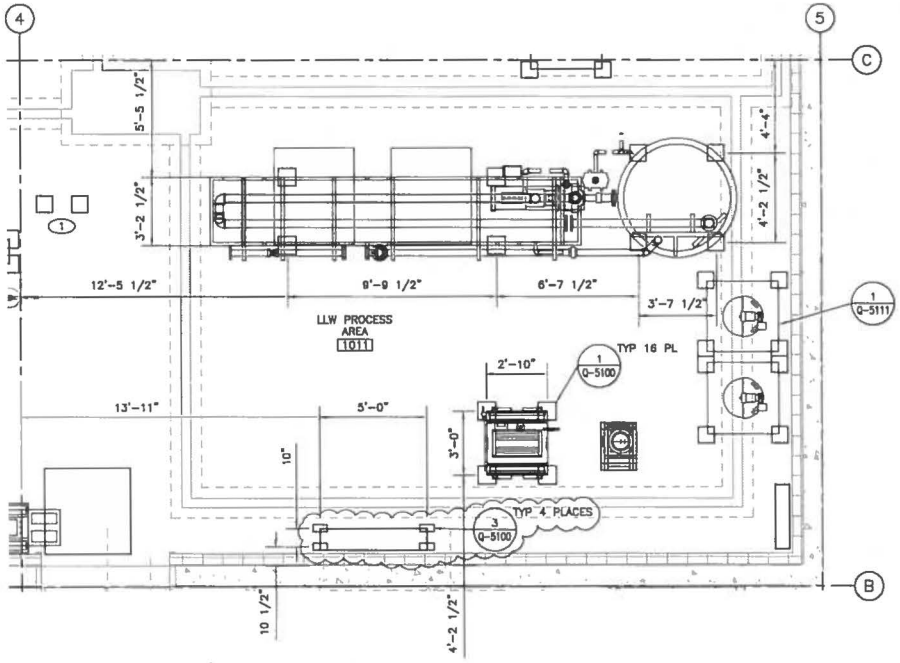

PROCESS BAY ENLARGED PLAN

1' 0 1' 2' 3' 4'

3/8"=1'-0"

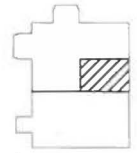

KEY PLAN
SCALE: NONE

GENERAL NOTES

1. IF THIS SHEET IS NOT 24"x 36", THEN IT IS A REDUCED SIZE PLOT. USE GRAPHIC SCALE ACCORDINGLY.
2. COORDINATE LOCATION OF EMBED PLATES WITH VENDORS AND ENSURE A 5" MINIMUM DISTANCE FROM CONCRETE EDGE TO EDGE OF PLATE, AND A 4" MINIMUM EDGE DISTANCE TO SCREW ANCHORS.

KEYED NOTES

(1) EMBED PLATES NOT DIMENSIONED ARE FOR SUPPORT EQUIPMENT AND SHALL BE PLACED APPROXIMATELY WHERE SHOWN.

NO	DATE	CLASS REV	ADC	DESCRIPTION	DWN	DES	CHKD	SUB	APP
1	7/7/14	U		REVISED EMBED PLATES	AmT	MmT			

AECOM

RLWTF-UP LOW LEVEL WASTE SUBPROJECT

PROCESS BAY ENLARGED PLAN

DRAWN	V DAVISON
DESIGN	S MOORE
CHECKED	B SHREEVE
DATE	8/8/14

BLDG. 230 TA-50

SUBMITTED: MANNY TARIN

APPROVED FOR RELEASE: ED ARTIGLIA

Los Alamos NATIONAL LABORATORY PO Box 1663 Los Alamos, New Mexico 87545

SHEET Q-4103

126 OF 434

CLASSIFICATION | REVIEWER | DATE

PROJECT ID 100761 | DRAWING NO C55864 | REV 1

CHARLES MOYER NEW MEXICO 10820 REGISTERED PROFESSIONAL ENGINEER 7-7-14

File Location: N:\RLWTF LOW-LEVEL WASTE FACILITY\000 CAD\C55864 MAIN BUILDING\SHEETS\11 EQUIPMENT\A55864-Q-4103-R1.DWG
Plotted By: GALLEGOS, ALAN Plot Date: Thursday, July 03, 2014

12717

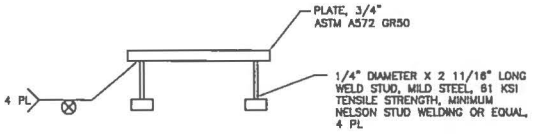

SIDE VIEW

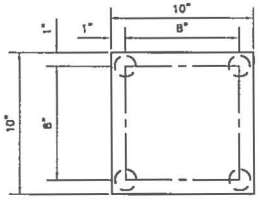

TOP VIEW

1 Q-4100 1 Q-4101 1 Q-4102 1 Q-5100 1 Q-4103 1 Q-5110 1 Q-5111

EMBED PLATE WELDMENT DETAIL

SCALE: NONE

NOTE:
1.) PLACE AT GRADE IN MAIN POUR.
2.) WELD EQUIPMENT BASE TO EMBED PLATE. USE E309 ELECTRODE AT STAINLESS STEEL TO EMBED PLATE WELDING, E70 ELECTRODE ALL OTHER STEEL TO STEEL CONDITIONS.

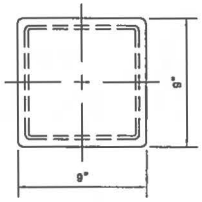

TOP VIEW

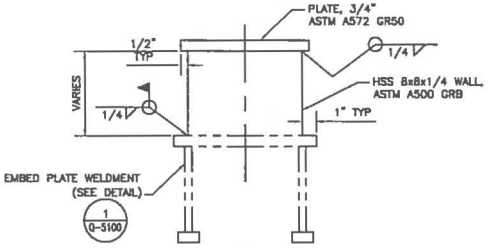

SIDE VIEW

2 Q-5100 HOUSEKEEPING PAD AND EXTENSION WELDMENT DETAIL

SCALE: NONE

NOTE:
1.) LENGTH OF HSS VARIES, DEPENDENT ON HOUSEKEEPING PAD THICKNESS. TOP OF PLATE/CHANNEL SHALL BE FLUSH WITH TOP OF HOUSEKEEPING PAD OR PROUD UP TO 1/4".

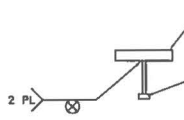

SIDE VIEW

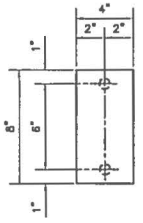

TOP VIEW

3 Q-4100 EMBED PLATE WELDMENT DETAIL

SCALE: NONE

NOTE:
1.) PLACE AT GRADE IN MAIN POUR.

NO	DATE	CLASS REV	ADC	DESCRIPTION	DWN	DES	CHKD	SUB	APP
1	7/7/14	U		ADDED DETAIL					

AECOM

RLWTF-UP LOW LEVEL WASTE SUBPROJECT

EMBEDMENT PLATE DETAILS

BLDG. 230 TA-50

DRAWN	V DAVISON
DESIGN	S MOORE
CHECKED	C MOYERS
DATE	5/8/14

SUBMITTED: MANNY TARIN

APPROVED FOR RELEASE: ED ARTIGLIA

Los Alamos NATIONAL LABORATORY PO Box 1663 Los Alamos, New Mexico 87545

SHEET Q-5100

127 OF 434

CLASSIFICATION | REVIEWER | DATE

PROJECT ID 100761 | DRAWING NO C55864 | REV 1

CHARLES MOYERS NEW MEXICO 16836 LICENSED PROFESSIONAL ENGINEER 7-7-14

File Location: W:\RLWTF LOW-LEVEL WASTE FACILITY\300 CAD\C55864 MAIN BUILDING\SHEETS\11 EQUIPMENT\55864-Q-5100-R1.DWG
Plotted By: GILLESON, ALAN Plot Date: Thursday, July 03, 2014

: 12178

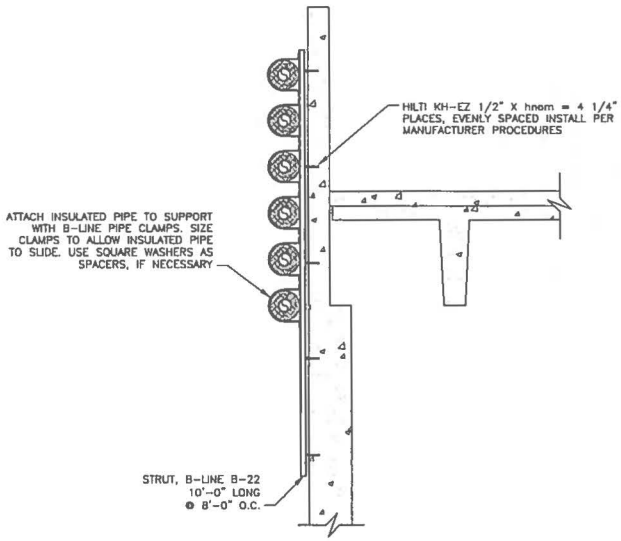

1 / M-1105 VERTICAL PIPE SUPPORT DETAIL
SCALE: NONE

NO	DATE	CLASS REV	ADC	DESCRIPTION	DWN	DES	CHKD	SUB	APP

AECOM

RLWTF-UP LOW LEVEL WASTE SUBPROJECT

PIPE SUPPORT DETAILS

BLDG. 230 TA-50

DRAWN	V DAVISON
DESIGN	S MOORE
CHECKED	C MOYERS
DATE	5/8/14

SUBMITTED MANNY TARIN

APPROVED FOR RELEASE ED ARTIGLIA

Los Alamos NATIONAL LABORATORY PO Box 1663 Los Alamos, New Mexico 87545

SHEET Q-5102

128 OF 434

CLASSIFICATION | REVIEWER | DATE

PROJECT ID 100761 | DRAWING NO C55864 | REV 0

CHARLES MOYERS NEW MEXICO 18830 LICENSED PROFESSIONAL ENGINEER
05-08-14

File Location: P:\RLWTF LOW-LEVEL WASTE FACILITY\500 CAD\C55864 MAIN BUILDING\SHEETS\11 EQUIPMENT\55864-Q-5102-R0.DWG
Plotted By: DAVISON, VANESSA; Plot Date: Monday, May 12, 2014

121179

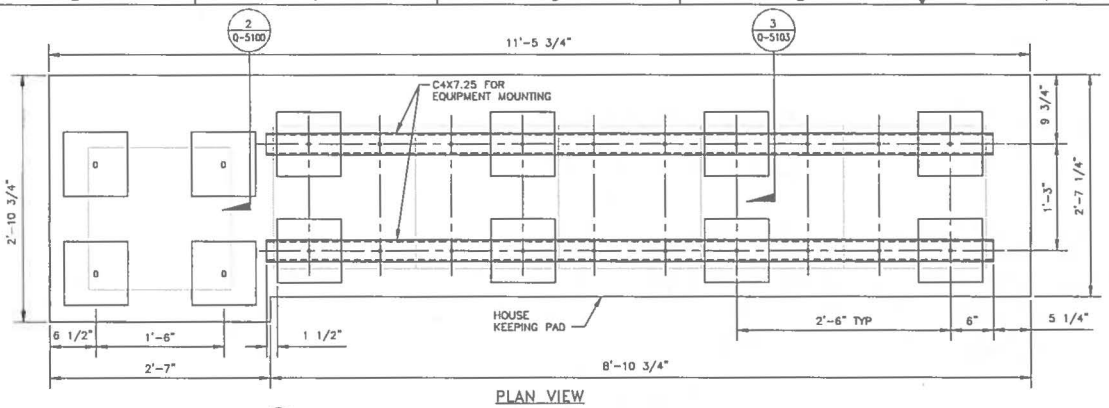

PLAN VIEW

1 Q-4102 MCC-A AND XFMR-2 FLOOR MOUNTING DETAIL
SCALE: NONE

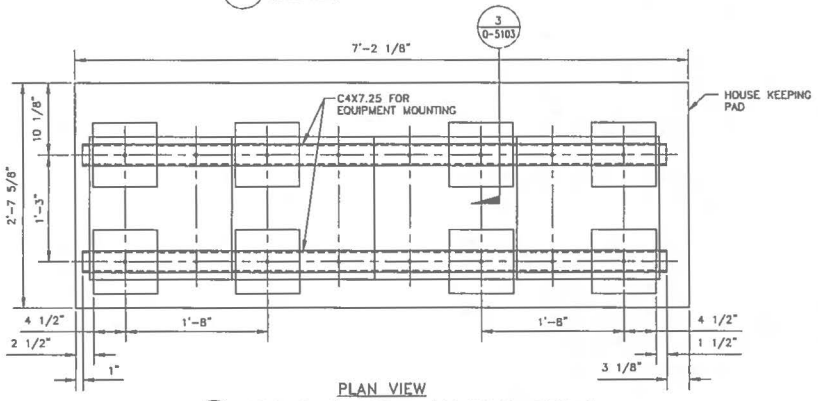

PLAN VIEW

2 Q-4102 MCC-B FLOOR MOUNTING DETAIL
SCALE: NONE

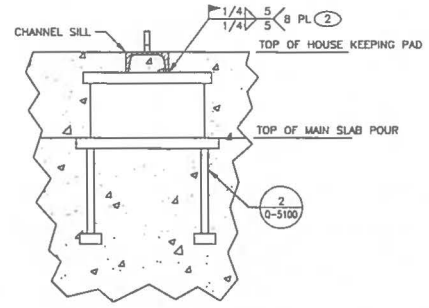

SECTION VIEW

3 Q-5103 SILL CHANNEL EMBEDMENT DETAIL
3"=1'-0"

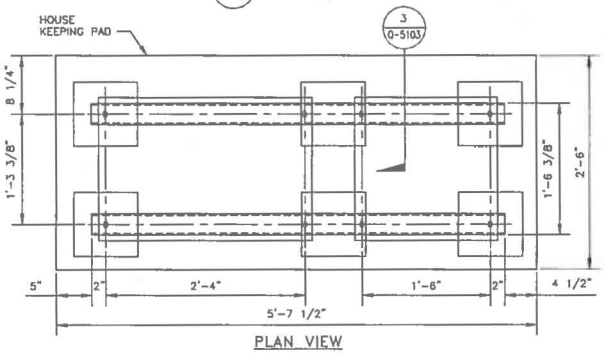

PLAN VIEW

4 Q-4102 XFMR-1 AND XFMR-3 FLOOR MOUNTING DETAIL
SCALE: NONE

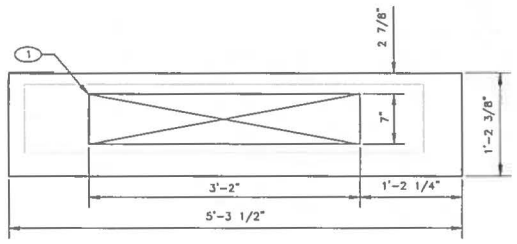

PLAN VIEW

5 Q-4102 SWBD-A FLOOR MOUNTING DETAIL
SCALE: NONE

GENERAL NOTES

1. IF THIS SHEET IS NOT 24"X36", THEN IT IS A REDUCED SIZE PLOT. USE THE GRAPHIC SCALE ACCORDINGLY.

KEYED NOTES

1. BLOCKOUT HOUSE KEEPING PAD AROUND SERVICE CONDUITS THAT PENETRATE THE FLOOR SLAB.
2. WELD CENTERED ON EMBED PLATE TYPICAL.

NO	DATE	CLASS REV	ADC	DESCRIPTION	DWN	DES	CHKD	SUB	APP

AECOM

RLWTF-UP LOW LEVEL WASTE SUBPROJECT

MOTOR CONTROL CENTER MOUNTING DETAILS

BLDG. 230 TA-50

DRAWN	V DAVISON
DESIGN	S MOORE
CHECKED	C MOYERS
DATE	5/8/14

SUBMITTED: MANNY TARIN
APPROVED FOR RELEASE: ED ARTIGLIA

Los Alamos NATIONAL LABORATORY PO Box 1663 Los Alamos, New Mexico 87545

SHEET Q-5103
129 OF 434

CLASSIFICATION | REVIEWER | DATE

PROJECT ID 100761 | DRAWING NO C55864 | REV 0

CHARLES MOYERS NEW MEXICO 16838 LICENSED PROFESSIONAL ENGINEER
05-08-14

File Location: P:\RLWTF LOW-LEVEL WASTE FACILITY\000 CAD\C55864 MAIN BUILDING\SHEETS\11 EQUIPMENT\C55864-Q-5103-R0.DWG
Plotted By: MOORE, STEPHEN Plot Date: Monday, May 05, 2014

12180

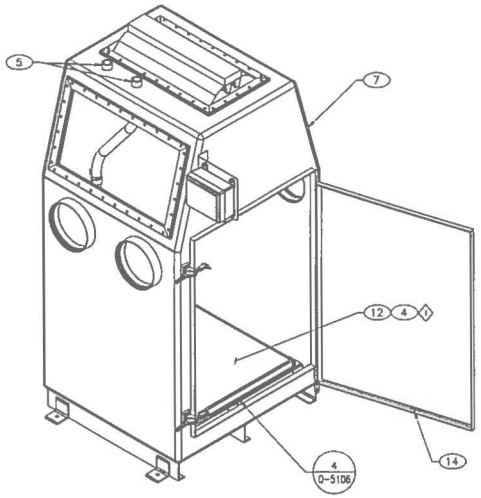

ISOMETRIC VIEW

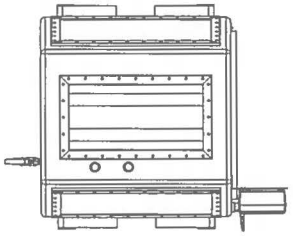

TOP VIEW

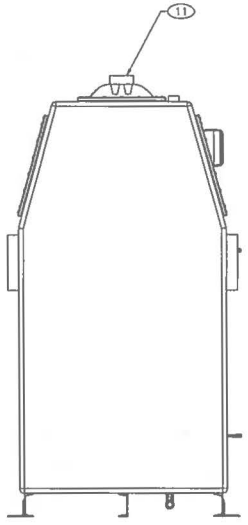

LEFT VIEW

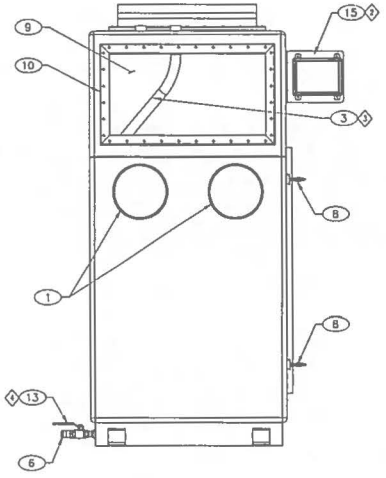

FRONT VIEW

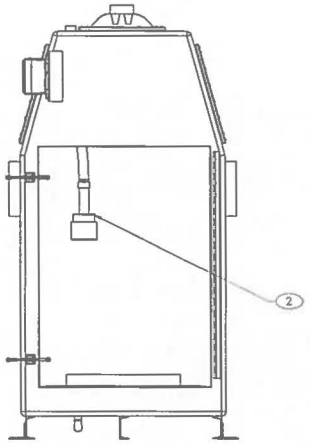

NOTE: DOOR NOT SHOWN FOR CLARITY

RIGHT VIEW

ENCL-1701, ENCL-1702
DRUM LOADING STATION DETAIL

1 / 0-1101 SCALE: NONE

GENERAL NOTES

1. IF THIS SHEET IS NOT 24"x 36", THEN IT IS A REDUCED SIZE PLOT. USE GRAPHIC SCALE ACCORDINGLY.
2. REFER TO SPECIFICATION SECTIONS 115311.08, 115311.10, 115311.12 AND 115311.17 FOR ENCLOSURE DESIGN, FABRICATION, INSTALLATION, AND INSTRUMENTATION DETAILS.

KEYED NOTES

(1) BARE HAND ENTRY (IRIS PORTS), 7-5/8" ID.
(2) SST 20 OZ. BEAKER, MCMASTER-CARR 4352T4.
(3) FLEX HOSE FILL LINE.
(4) SEE SHEETS Q-5105 & Q-5106 FOR DRUM SCALE MOUNT AND CONTAINMENT DETAILS.
(5) 1" FNPT THREADED COUPLING.
(6) QUICK COUPLING DIXON G75-F-SS, OR EQUIVALENT.
(7) ENCLOSURE WELDMENT AND ANCHORAGE, SEE SHEET Q-5105 FOR DETAILS.
(8) HOLD DOWN CLAMPS, MINIMUM HOLDING CAPACITY, 600 LBS.
(9) VIEWING WINDOW, LEXAN WITH WINDOW CHANNEL GASKET.
(10) TYPICAL WINDOW BEZEL. DETAIL PER AGS-G001-2007.
(11) 24" FLUORESCENT LAMP.
(12) FORCE FLOW DRUM SCALE, STAINLESS STEEL, 0-800 LBS, 27-DR8DSS, OR EQUIVALENT.
(13) ENCLOSURE DRAIN VALVE.
(14) LEAK TIGHT DOOR GASKET.
(15) DRUM SCALE INDICATOR.
(16) HEPA FILTER.

		LLW ROUGHING FILTER DRUM LOADING STATION	LLW EVAPORATOR DRUM LOADING STATION
	ENCLOSURE	ENC-1701	ENC-1702
1	DRUM SCALE	WE-1701	WE-1702
2	WEIGHT INDICATOR	WI-1701	WI-1702
3	FLEX HOSE	LLW-071-FH-01	LLW-200-FH-01
4	DRAIN VALVE	V-1115	V-1781
5	HEPA FILTER	FAH-1701	FAH-1702

NO	DATE	CLASS REV	ADC	DESCRIPTION	DWN	DES	CHKD	SUB	APP

AECOM

RLWTF-UP LOW LEVEL WASTE SUBPROJECT

DRUM LOADING STATION DETAIL

DRAWN V. DAVISON
DESIGN S. MOORE
CHECKED C. MOYERS
DATE 9/8/14

BLDG. 230 TA-50

SUBMITTED MANNY TARIN

APPROVED FOR RELEASE ED ARTIGLIA

Los Alamos NATIONAL LABORATORY PO Box 1663 Los Alamos, New Mexico 87545

SHEET Q-5104
130 OF 434

CLASSIFICATION REVIEWER DATE

PROJECT ID 100761 DRAWING NO C55864 REV 0

CHARLES MOYERS 18838 NEW MEXICO REGISTERED PROFESSIONAL ENGINEER 05-09-14

121821 :

File Location: P:\RLWTF LOW-LEVEL WASTE FACILITY\500 DAD\C55864 MAIN BUILDING\SHEETS\11 EQUIPMENT\55864-Q-5104.R0.DWG
Plotted By: MOORE, STEPHEN Plot Date: Monday, May 05, 2014

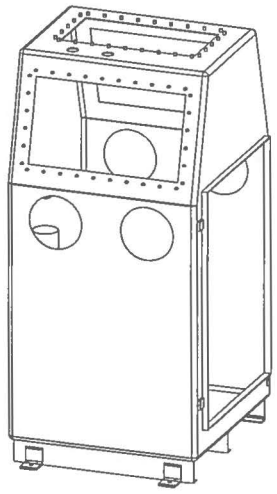

ISOMETRIC VIEW

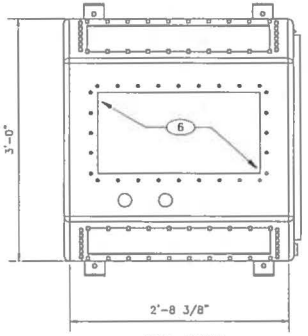

TOP VIEW

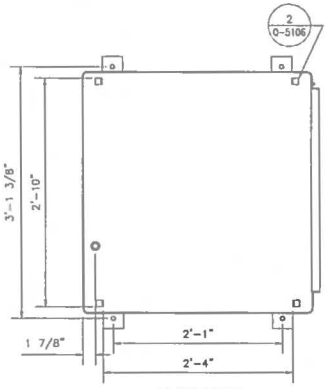

PLAN VIEW

2 Q-5105 FLOOR PAN DETAIL
SCALE: NONE

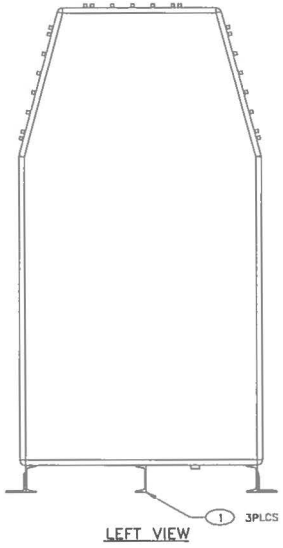

LEFT VIEW

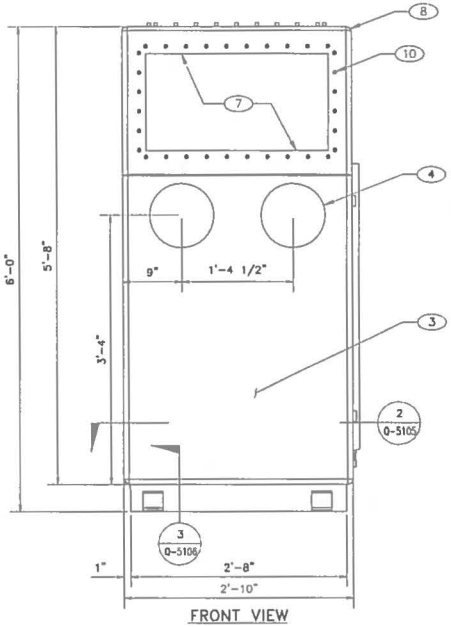

FRONT VIEW

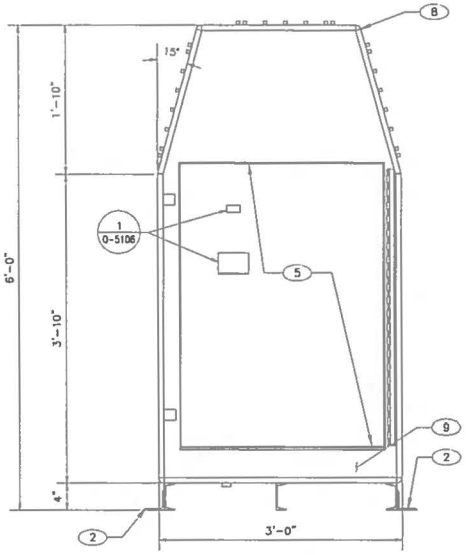

RIGHT VIEW

1 Q-5105 DRUM LOADING STATION WELDMENT
SCALE: NONE

GENERAL NOTES

1. IF THIS SHEET IS NOT 24"x 36", THEN IT IS A REDUCED SIZE PLOT. USE GRAPHIC SCALE ACCORDINGLY.
2. REFER TO SPECIFICATION SECTIONS 115311.08, 115311.10, 115311.12 AND 115311.17 FOR ENCLOSURE DESIGN, FABRICATION, INSTALLATION, AND INSTRUMENTATION DETAILS.

KEYED NOTES

1. C4x5.4, STAINLESS STEEL.
2. L3x3x3/8, 3"L, STAINLESS STEEL.
3. 7 GAUGE SHEET METAL, 304L STAINLESS STEEL W/ A MAXIMUM ACCEPTABLE ROUGHNESS AVERAGE VALUE OF 32 MICRO-IN OR EQUIVALENT ASTM A480/A480M NO. 4 FINISH.
4. GLOVEPORT OPENING SIZE AS REQUIRED.
5. 45" X 30" DOOR OPENING.
6. 24" X 12" WINDOW OPENING. STANDARD PER AGS-G001-2007.
7. 27" X 15" WINDOW OPENING, STANDARD PER AGS-G001-2007 BOTH SIDES.
8. ALL INTERIOR CORNERS SHALL BE ROUNDED WITH A MINIMUM 5/8" INSIDE RADIUS AND A MATCHING SPHERICAL INSIDE RADIUS WHERE 3 SIDES MEET IN A CORNER.
9. GLOVE BOX DOOR THRESHOLD POSITIONED SUCH THAT GLOVE BOX CAN HOLD A MINIMUM OF 25 GALLONS.
10. ø0.05" WELD STUD. TAP 1/4-20 UNC-2B, LENGTH AS REQUIRED. WELD STUD ARRANGEMENT PER AGS-G001-2007.

NO	DATE	CLASS REV	ADC	DESCRIPTION	DWN	DES	CHKD	SUB	APP

AECOM

RLWTF-UP LOW LEVEL WASTE SUBPROJECT

DRUM LOADING STATION WELDMENT

BLDG. 230 TA-50

DRAWN	V DAVISON
DESIGN	S MOORE
CHECKED	C MOYERS
DATE	5/8/14

SUBMITTED MANNY TARIN

APPROVED FOR RELEASE ED ARTIGLIA

Los Alamos NATIONAL LABORATORY PO Box 1663 Los Alamos, New Mexico 87545

SHEET Q-5105

131 OF 434

CLASSIFICATION | REVIEWER | DATE

PROJECT ID 100761 | DRAWING NO C55864 | REV 0

CHARLES MOYERS NEW MEXICO 16838 LICENSED PROFESSIONAL ENGINEER

05-08-14

File Location: P:\RLWTF LOW-LEVEL WASTE FACILITY\500 CAD\C55864 MAIN BUILDING\SHEETS\11 EQUIPMENT\55864-Q-5105-RO.DWG
Plotted By: MOORE, STEPHEN Plot Date: Monday, May 05, 2014

: 12182

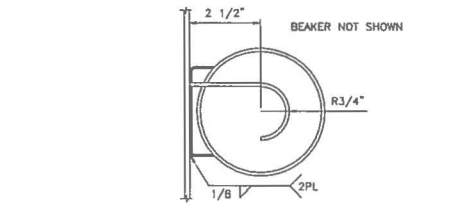

PLAN VIEW

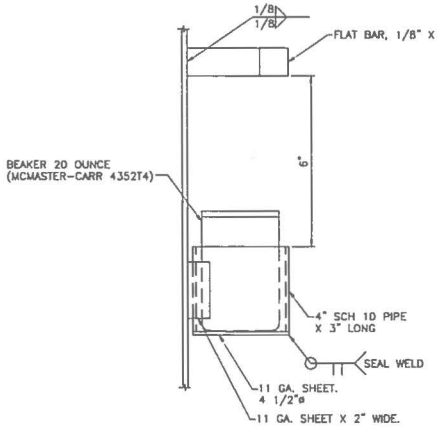

SIDE VIEW

1 0-5105 FILL LINE STORAGE DETAIL

2" 1" 0 1" 2"
1/2"=1"

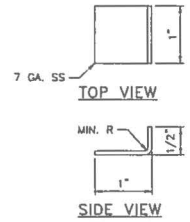

TOP VIEW

SIDE VIEW

2 0-5105 FLOOR CLIP DETAIL
SCALE: NONE

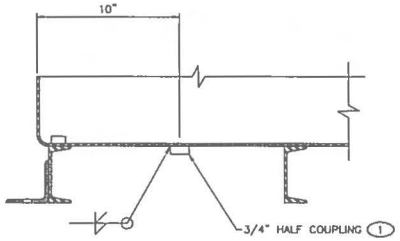

SECTION VIEW

3 0-5105 DRAIN DETAIL

0 1" 2" 4" 6" 8"
3"=1'-0"

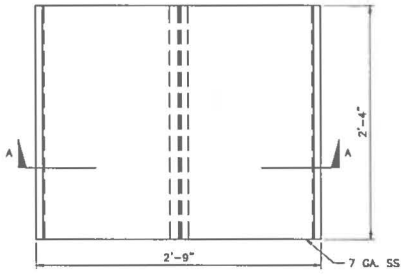

PLAN VIEW

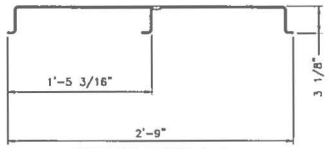

SECTION VIEW A-A

4 0-5104 DRUM SCALE MOUNT DETAIL
SCALE: NONE

GENERAL NOTES

1. IF THIS SHEET IS NOT 24"x 36", THEN IT IS A REDUCED SIZE PLOT. USE GRAPHIC SCALE ACCORDINGLY.
2. REFER TO SPECIFICATION SECTIONS 115311.08, 115311.10, 115311.12 AND 115311.17 FOR ENCLOSURE DESIGN, FABRICATION, INSTALLATION, AND INSTRUMENTATION DETAILS.

KEYED NOTES

(1) COUPLING SHALL BE INSTALLED FLUSH WITH BOTTOM OF GLOVE BOX. SEAL WELD INSIDE SEAM AND GRIND SMOOTH.

NO	DATE	CLASS REV	ADC	DESCRIPTION	DWN	DES	CHKD	SUB	APP

AECOM

RLWTF-UP LOW LEVEL WASTE SUBPROJECT

DRUM LOADING STATION DETAILS

DRAWN	V DAVISON
DESIGN	S MOORE
CHECKED	C MOYERS
DATE	5/8/14

BLDG. 230 TA-50

SUBMITTED MANNY TARIN

APPROVED FOR RELEASE ED ARTIGLIA

Los Alamos NATIONAL LABORATORY PO Box 1663 Los Alamos, New Mexico 87545

SHEET Q-5106

132 OF 434

CLASSIFICATION | REVIEWER | DATE

PROJECT ID 100761 | DRAWING NO C55864 | REV 0

CHARLES MOYERS NEW MEXICO 15030 REGISTERED PROFESSIONAL ENGINEER

05-09-14

File: Location: P:\RLWTF LOW-LEVEL WASTE FACILITY\500 CAD\C55864 MAIN BUILDING\SHEETS\11 EQUIPMENT\55864-Q-5106-R0.DWG
Plotted By: MOORE, JUSTIN Plot Date: Monday, May 05, 2014

121183

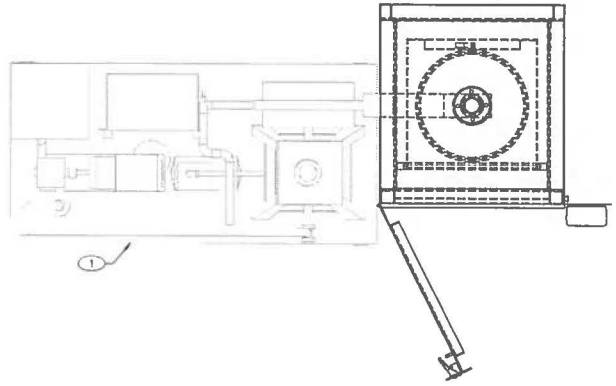

TOP VIEW

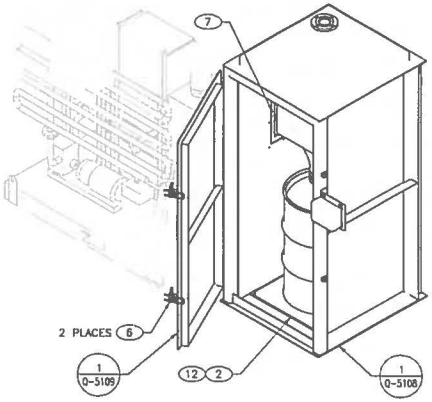

ISOMETRIC VIEW
NOT TO SCALE

GENERAL NOTES

1. IF THIS SHEET IS NOT 24"x 36", THEN IT IS A REDUCED SIZE PLOT. USE GRAPHIC SCALE ACCORDINGLY.
2. REFER TO SPECIFICATION SECTION 444616 FOR ENCLOSURE DESIGN, FABRICATION, INSTALLATION, AND INSTRUMENTATION DETAILS.

KEYED NOTES

1. ROTARY PRESS (FLT-1704).
2. DRUM SCALE (WE-1730), FORCE FLOW, STAINLESS STEEL, 0-800 LBS., 27-DRBDSS OR EQUIVALENT.
3. WEIGH STATION INDICATOR (WI-1730).
4. ROTARY PRESS DISCHARGE CHUTE.
5. 3" VENTILATION OUTLET, 150# RF FLANGE.
6. HOLD DOWN CLAMPS, MINIMUM CAPACITY 600LBS.
7. FLEXIBLE ENTRY BOOT.
8. PLASTIC BAG LINED 55 GALLON DRUM, DRUM AND BAG PROVIDED BY OTHERS.
9. BAG IN / BAG OUT TYPE CHUTE CONNECTION.
10. 25 GALLON SPILLAGE CONTAINMENT BASIN.
11. PROVIDE SUFFICIENT CLEARANCE TO COMPLETE BAG IN/BAG OUT PROCEDURES.
12. DRUM SCALE MOUNTING PLATFORM.
13. HEPA FILTER.

ENCLOSURE	FILTER PRESS DRUM LOADING STATION
DRUM SCALE	WE-1730
WEIGHT INDICATOR	WI-1730
HEPA FITLER	FAH-1703

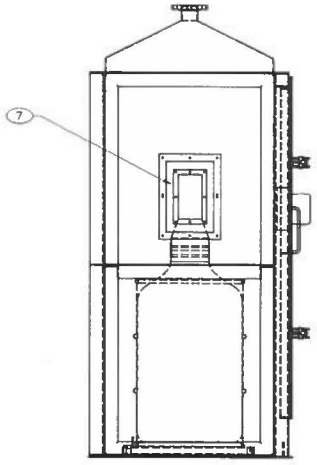

LEFT VIEW

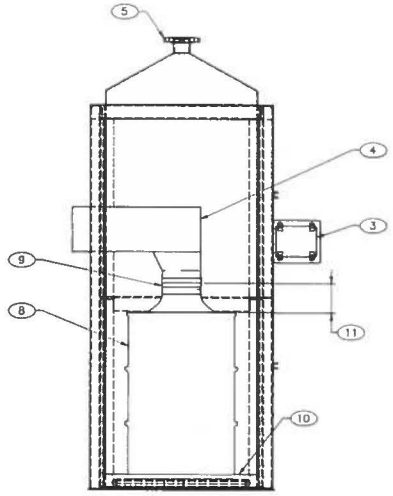

NOTE. DOOR NOT SHOWN FOR CLARITY

FRONT VIEW

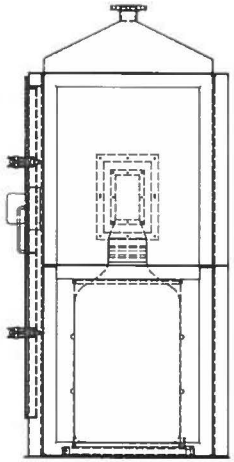

RIGHT VIEW

1 Q-1101 ENCL-1703 FILTER PRESS DRUM LOADING STATION DETAIL

1" 0" 6" 3" 0 1"
1"=1'-0"

CHARLES MOYERS NEW MEXICO 10839 REGISTERED PROFESSIONAL ENGINEER
05-09-14

NO	DATE	CLASS REV	ADC	DESCRIPTION	DWN	DES	CHKD	SUB	APP

AECOM

RLWTF-UP LOW LEVEL WASTE SUBPROJECT

FILTER PRESS DRUM LOADING STATION DETAIL

DRAWN	V DAVISON
DESIGN	S MOORE
CHECKED	C MOYERS
DATE	5/8/14

BLDG. 230 TA-50

SUBMITTED MANNY TARIN — APPROVED FOR RELEASE ED ARTIGLIA

Los Alamos NATIONAL LABORATORY PO Box 1663 Los Alamos, New Mexico 87545

SHEET Q-5107

133 OF 434

CLASSIFICATION | REVIEWER | DATE

PROJECT ID 100761 | DRAWING NO C55864 | REV 0

File Location: P:\RLWTF LOW-LEVEL WASTE FACILITY\350 CAD\C55864 MAIN BUILDING\SHEETS\11 EQUIPMENT\55864-Q 5107-R0.DWG
Plotted By: MOORE, STEPHEN Plot Date: Monday, May 05, 2014

121181

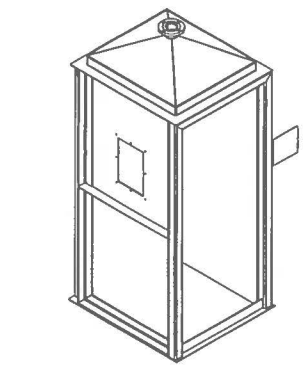

ISOMETRIC VIEW
NOT TO SCALE

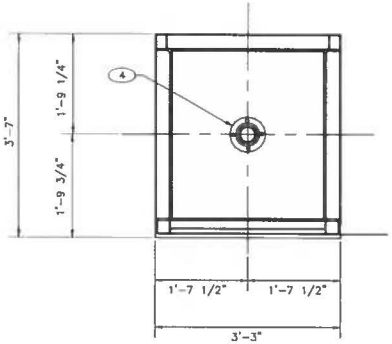

TOP VIEW

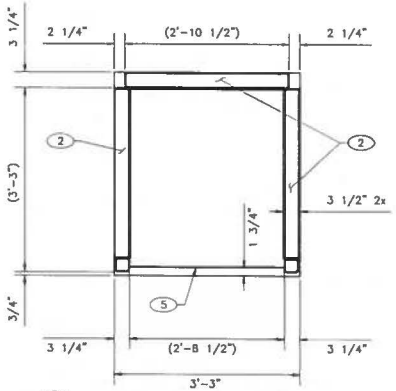

2 Q-5108 WELDMENT BASE DETAIL
1"=1'-0"

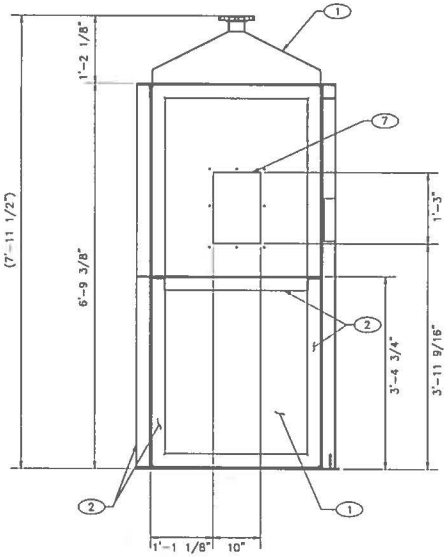

LEFT VIEW

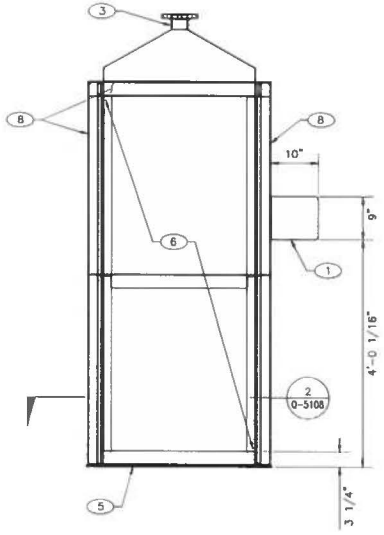

FRONT VIEW

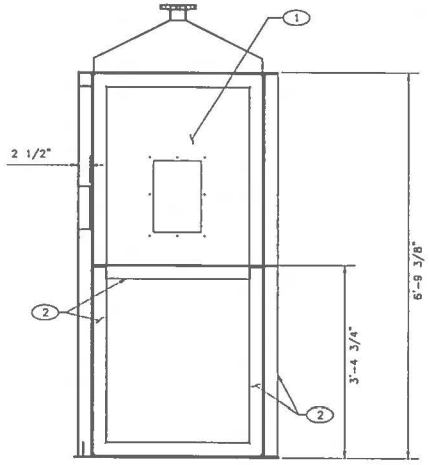

RIGHT VIEW

1 Q-5107 FILTER PRESS DRUM LOADING STATION WELDMENT
1"=1'-0"

GENERAL NOTES

1. IF THIS SHEET IS NOT 24"x 36", THEN IT IS A REDUCED SIZE PLOT. USE GRAPHIC SCALE ACCORDINGLY.
2. REFER TO SPECIFICATION SECTION 444616 FOR ENCLOSURE DESIGN, FABRICATION, INSTALLATION, AND INSTRUMENTATION DETAILS.

KEYED NOTES

1. 7 GAUGE SHEET METAL, STAINLESS STEEL, TYPICAL.
2. L3x3x1/4, ASTM A276, STAINLESS STEEL, TYPICAL FRAME MEMBERS.
3. PIPE, 3" SCH 40, ASTM A312/A312M, STAINLESS STEEL.
4. FLANGE, 3" RF 150#, STAINLESS STEEL.
5. PLATE, 1/4" THICK, ASTM A240/A240M, STAINLESS STEEL.
6. 75" X 31 3/4" DOOR OPENING.
7. OPENING FOR ROTARY PRESS CHUTE AND FLEXIBLE ENTRY BOOT.
8. 3x3x1/4 HHS, ASTM A554, STAINLESS STEEL.

NO	DATE	CLASS REV	ADC	DESCRIPTION	DWN	DES	CHKD	SUB	APP

AECOM

RLWTF-UP LOW LEVEL WASTE SUBPROJECT

FILTER PRESS DRUM LOADING STATION WELDMENT

BLDG. 230 TA-50

DRAWN	V DAVISON
DESIGN	S MOORE
CHECKED	C MOYERS
DATE	5/6/14

SUBMITTED MANNY TARIN

APPROVED FOR RELEASE ED ARTIGLIA

Los Alamos NATIONAL LABORATORY PO Box 1663 Los Alamos, New Mexico 87545

SHEET Q-5108

134 OF 434

CLASSIFICATION | REVIEWER | DATE

PROJECT ID 100761 | DRAWING NO C55864 | REV 0

CHARLES MOYERS NEW MEXICO 18030 LICENSED PROFESSIONAL ENGINEER
05-08-14

File Location: P:\RLWTF-LOW-LEVEL WASTE FACILITY\100 CAD\C55864 MAIN BUILDING\SHEETS\11 EQUIPMENT\55864-Q-5108-R0.DWG
Plotted By: MOORE, STEPHEN; Plot Date: Monday, May 05, 2014

: 12185

GENERAL NOTES

1. IF THIS SHEET IS NOT 24"x 36", THEN IT IS A REDUCED SIZE PLOT. USE GRAPHIC SCALE ACCORDINGLY.
2. REFER TO SPECIFICATION SECTION 444616 FOR ENCLOSURE DESIGN, FABRICATION, INSTALLATION, AND INSTRUMENTATION DETAILS.

KEYED NOTES

1. 7 GAUGE SHEET METAL, STAINLESS STEEL
2. L3x3x1/4, ASTM A276, STAINLESS STEEL
3. CONTINUOUS HINGE, STAINLESS STEEL
4. DOOR HANDLE, STAINLESS STEEL

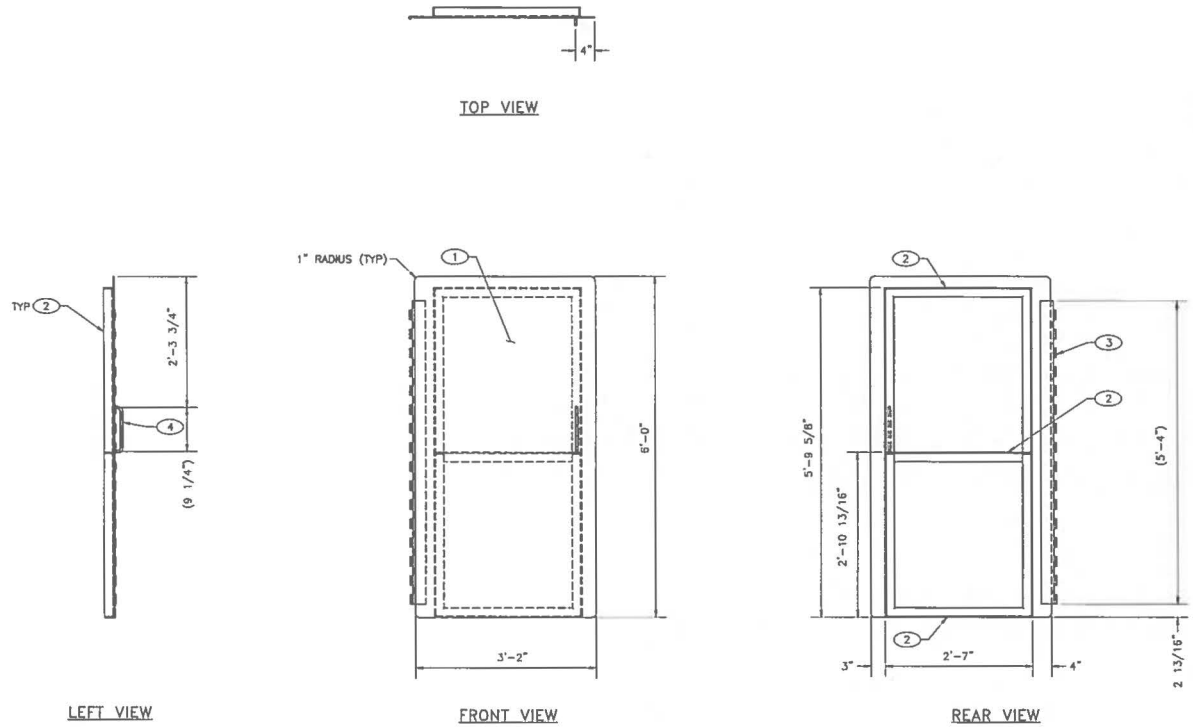

1 Q-5107 FILTER PRESS DRUM LOADING STATION DOOR DETAIL

1" 9" 6" 3" 0 1"
1"=1'-0"

NO	DATE	CLASS REV	ADC	DESCRIPTION	DWN	DES	CHKD	SUB	APP

AECOM

RLWTF-UP LOW LEVEL WASTE SUBPROJECT

FILTER PRESS DRUM LOADING STATION DETAIL

BLDG. 230 TA-50

DRAWN	V DAVISON
DESIGN	S MOORE
CHECKED	C MOYERS
DATE	5/8/14

SUBMITTED: MANNY TARIN

APPROVED FOR RELEASE: ED ARTIGLIA

Los Alamos NATIONAL LABORATORY PO Box 1663 Los Alamos, New Mexico 87545

SHEET Q-5109

135 OF 434

CLASSIFICATION | REVIEWER | DATE

PROJECT ID 100761 | DRAWING NO C55864 | REV 0

CHARLES MOYERS NEW MEXICO 16830 LICENSED PROFESSIONAL ENGINEER

05-08-14

File Location: P:\RLWTF LOW-LEVEL WASTE FACILITY\500 CAD\C55864 MAIN BUILDING\SHEETS\11 EQUIPMENT\55864-Q-5109-R0.DWG
Plotted By: MOORE, STEPHEN Plot Date: Monday, May 05, 2014

SB1212 :

GENERAL NOTES

1. CHEMICAL STORAGE DRUM RESTRAINT FIXTURE APPROXIMATE WEIGHT IS 390 LBS.

KEYED NOTES

(1) STAINLESS STEEL CHAIN.

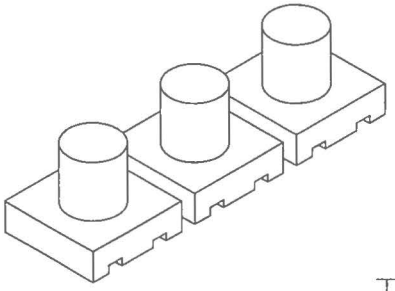

ISOMETRIC VIEW

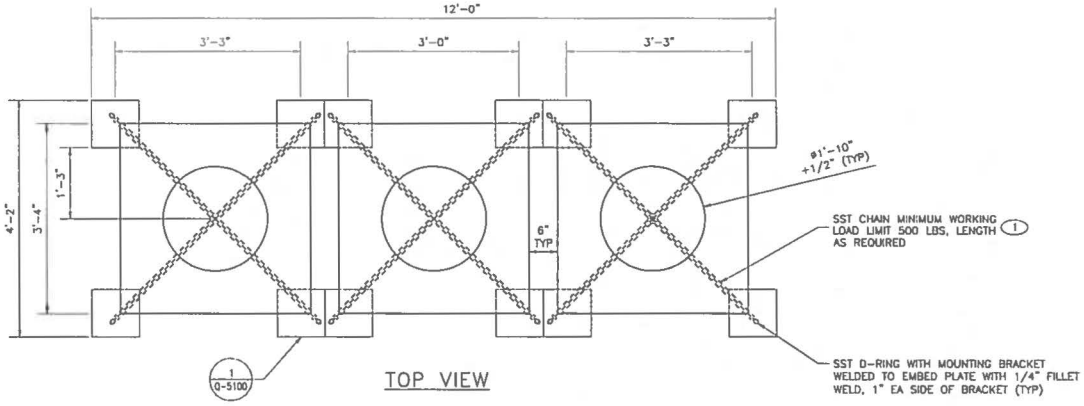

TOP VIEW

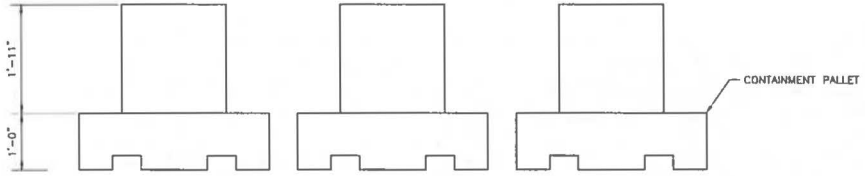

FRONT VIEW

1 / Q-4101 CHEMICAL STORAGE DRUM RESTRAINT FIXTURE
SCALE: NONE

NO	DATE	CLASS REV	ADC	DESCRIPTION	DWN	DES	CHKD	SUB	APP

AECOM

RLWTF-UP LOW LEVEL WASTE SUBPROJECT

CHEMICAL STORAGE DRUM RESTRAINT FIXTURE

BLDG. 230 TA-50

DRAWN	V. DAVISON
DESIGN	S. MOORE
CHECKED	C. MOYERS
DATE	5/8/14

SUBMITTED MANNY TARIN — APPROVED FOR RELEASE ED ARTIGLIA

CHARLES MOYERS NEW MEXICO 16828 REGISTERED PROFESSIONAL ENGINEER
05-09-14

Los Alamos NATIONAL LABORATORY PO Box 1663 Los Alamos, New Mexico 87545

SHEET Q-5110

136 OF 434

CLASSIFICATION | REVIEWER | DATE

PROJECT ID 100761 | DRAWING NO C55864 | REV 0

File Location: P:\RLWTF LOW-LEVEL WASTE FACILITY\300 CAD\C55864 MAIN BUILDING\SHEETS\11 EQUIPMENT\55864-Q-5110-R0.DWG
Plotted By: ADAC, STEPHEN Plot Date: Monday, May 12, 2014

121871

GENERAL NOTES

1. CHEMICAL STORAGE DRUM RESTRAINT FIXTURE APPROXIMATE WEIGHT IS 260 LBS.

KEYED NOTES

(1) STAINLESS STEEL CHAIN.

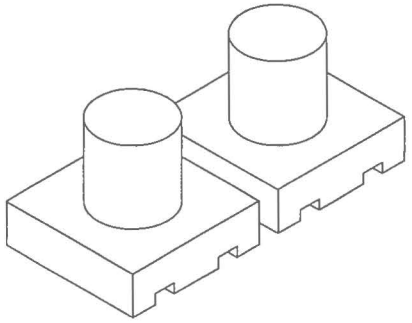

ISOMETRIC VIEW

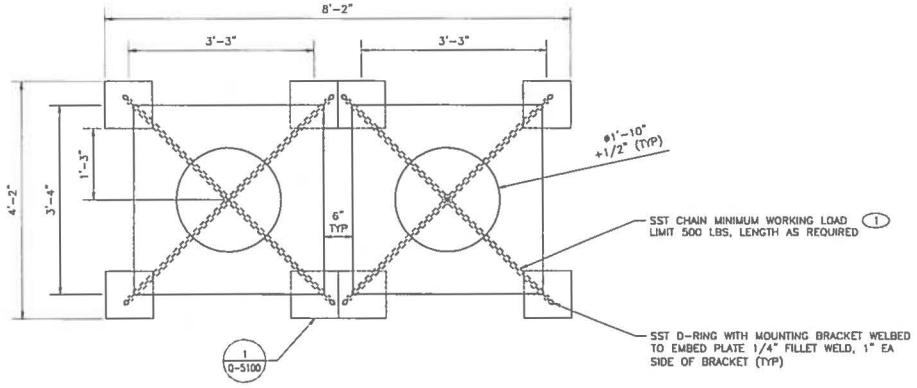

TOP VIEW

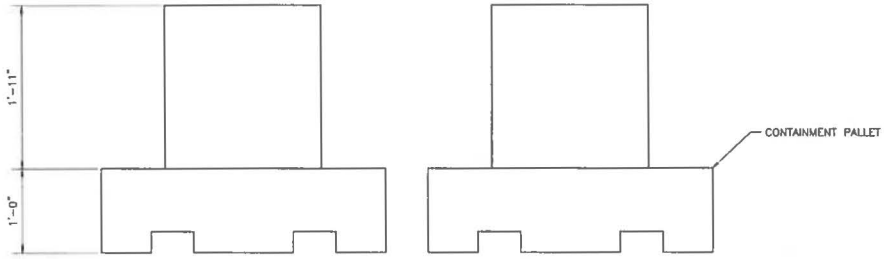

FRONT VIEW

1 Q-1400 1 Q-4100 1 Q-4103 CHEMICAL STORAGE DRUM RESTRAINT FIXTURE
SCALE: NONE

NO	DATE	CLASS REV	ADC	DESCRIPTION	DWN	DES	CHKD	SUB	APP

AECOM

RLWTF-UP LOW LEVEL WASTE SUBPROJECT

CHEMICAL STORAGE DRUM RESTRAINT FIXTURE

BLDG. 230 TA-50

DRAWN	V DAVISON
DESIGN	S MOORE
CHECKED	C MOYERS
DATE	5/8/14

SUBMITTED MANNY TARIN

APPROVED FOR RELEASE ED ARTIGLIA

Los Alamos NATIONAL LABORATORY PO Box 1663 Los Alamos, New Mexico 87545

CHARLES MOYERS NEW MEXICO 16839 LICENSED PROFESSIONAL ENGINEER 05-08-14

SHEET	
	Q-5111
	137 OF 434

CLASSIFICATION REVIEWER DATE

PROJECT ID	DRAWING NO	REV
100761	C55864	0

File Location: P:\RLWTF LOW-LEVEL WASTE FACILITY\500 CAD\C55864 MAIN BUILDING\SHEETS\11 EQUIP\MDGN\55864-Q-5111-MD.DWG
Plotted By: MOORE, STEPHEN Plot Date: Monday, May 05, 2014

88127 : 121188

PROCESS EQUIPMENT LIST – TANKS & MIXERS

ITEM NO.	LOCATION ROOM NO.	NO. REQUIRED	DESCRIPTION, MANUFACTURER OR APPROVED EQUAL — ALL EQUIPMENT SIZED FOR OPERATION AT 7500 FT. ELEVATION							FURNISHED BY
1 TK-1301	1011	1	CAPACITY 1,200 GALLONS	DIAMETER 6 FT	HEIGHT 7 FT		BOTTOM CONFIGURATION SLOPED	MATERIAL 304 SST	MIXER SEE BELOW	SUBCONTRACTOR
2 TK-1101	1011	1	CAPACITY 1,000 GALLONS	DIAMETER 5'-6"	HEIGHT 10'-6 1/2"		BOTTOM CONFIGURATION CONICAL	MATERIAL 304 SST	MIXER SEE BELOW	SUBCONTRACTOR
3 TK-1705	1011	1	CAPACITY 1,000 GALLONS	DIAMETER 5'-6"	HEIGHT 7 FT		BOTTOM CONFIGURATION SLOPED	MATERIAL 304 SST	MIXER SEE BELOW	SUBCONTRACTOR
4 TK-1703	1011	1	CAPACITY 200 GALLONS	DIAMETER 3 FT	LENGTH 6 FT		HORIZONTAL	MATERIAL 304 SST		SUBCONTRACTOR
5 TK-1304	1011	1	CAPACITY 800 GALLONS	DIAMETER 5'-6"	HEIGHT 5'-6"		BOTTOM CONFIGURATION SLOPED	MATERIAL 304 SST		SUBCONTRACTOR
6 TK-1707	1011	1	CAPACITY 100 GALLONS	DIAMETER 3' FT	HEIGHT 5'-6"		BOTTOM CONFIGURATION CONICAL	MATERIAL 304 SST		SUBCONTRACTOR
7 TK-1702	1011	1	CAPACITY 600 GALLONS	DIAMETER 4 FT	HEIGHT 10'-9 1/2"		BOTTOM CONFIGURATION CONICAL	MATERIAL 304 SST	MIXER SEE BELOW	SUBCONTRACTOR
8 TK-1706	1011	1	CAPACITY 500 GALLONS	DIAMETER 4 FT	HEIGHT 6'-6"		BOTTOM CONFIGURATION SLOPED	MATERIAL 304 SST		SUBCONTRACTOR
9 TK-1704	1011	1	CAPACITY 100 GALLONS	DIAMETER 3 FT	HEIGHT 5'-6"		BOTTOM CONFIGURATION CONICAL	MATERIAL 304 SST	MIXER SEE BELOW	SUBCONTRACTOR
10 TAC-4001 (1)	1011	1	CAPACITY 50 GALLONS	DIAMETER 1'-10"	HEIGHT 2'-8 1/2"		BOTTOM CONFIGURATION FLAT	MATERIAL HDPE	MIXER SEE BELOW	SUBCONTRACTOR
11 TAC-4002 (1)	1011	1	CAPACITY 50 GALLONS	DIAMETER 1'-10"	HEIGHT 2'-8 1/2"		BOTTOM CONFIGURATION FLAT	MATERIAL HDPE	MIXER SEE BELOW	SUBCONTRACTOR
12 TAC-4003 (1)	1011	1	CAPACITY 50 GALLONS	DIAMETER 1'-10"	HEIGHT 2'-8 1/2"		BOTTOM CONFIGURATION FLAT	MATERIAL HDPE		SUBCONTRACTOR
13 TAC-4006 (1)	1011	1	CAPACITY 50 GALLONS	DIAMETER 1'-10"	HEIGHT 2'-8 1/2"		BOTTOM CONFIGURATION FLAT	MATERIAL HDPE		SUBCONTRACTOR
14 TAC-4007 (1)	1011	1	CAPACITY 50 GALLONS	DIAMETER 1'-10"	HEIGHT 2'-8 1/2"		BOTTOM CONFIGURATION FLAT	MATERIAL HDPE		SUBCONTRACTOR
15 TAC-4010 (1)	1011	1	CAPACITY 50 GALLONS	DIAMETER 1'-10"	HEIGHT 2'-8 1/2"		BOTTOM CONFIGURATION FLAT	MATERIAL HDPE		SUBCONTRACTOR
16 TAC-4011 (1)	1011	1	CAPACITY 50 GALLONS	DIAMETER 1'-10"	HEIGHT 2'-8 1/2"		BOTTOM CONFIGURATION FLAT	MATERIAL HDPE		SUBCONTRACTOR
17 MC-1101	1011	1	TANK TK-1101	TANK INTERFACE 12" PIPE FLANGE	MANUFACTURER LIGHTNIN	MODEL NUMBER MIS51-1 11.2 H	POWER 0.5HP/120V			SUBCONTRACTOR
18 MC-1301	1011	1	TANK TK-1301	TANK INTERFACE 12" PIPE FLANGE	MANUFACTURER LIGHTNIN	MODEL NUMBER MIS51-1 11.2 H	POWER 0.5HP/120V			SUBCONTRACTOR
19 MC-1702	1011	1	TANK TK-1702	TANK INTERFACE 12" PIPE FLANGE	MANUFACTURER LIGHTNIN	MODEL NUMBER MIS51-1 11.2 H	POWER 0.5HP/120V			SUBCONTRACTOR
20 MC-1704	1011	1	TANK TK-1704	TANK INTERFACE 4" PIPE FLANGE	MANUFACTURER LIGHTNIN	MODEL NUMBER MITL1-1 3.8 H	POWER 0.5HP/120V			SUBCONTRACTOR
21 MC-1705	1011	1	TANK TK-1705	TANK INTERFACE 12" PIPE FLANGE	MANUFACTURER LIGHTNIN	MODEL NUMBER MIS51-1 11.2 H	POWER 0.5HP/120V			SUBCONTRACTOR
22 MC-4001	1011	1	TANK TAC-4001	MANUFACTURER NEPTUNE	MODEL NUMBER AN-E-50	POWER 1/20 HP/120V				SUBCONTRACTOR
23 MC-4002	1011	1	TANK TAC-4002	MANUFACTURER NEPTUNE	MODEL NUMBER AN-E-50	POWER 1/20 HP/120V				SUBCONTRACTOR

KEYED NOTES

(1) CHEMICAL HAZARD RATINGS:

CHEMICAL HAZARD RATING

ITEM NO.	CHEMICAL HAZARD	NFPA RATINGS				HAZARD	IBC MAQ (TOTAL CUMULATIVE AMOUNT PER CLASS)
		HEALTH	FIRE	REACTIVITY	PERSONAL PROTECTION		
10 TAC-4001	$Fe_2(SO_4)$	2	0	1	NA	CORROSIVE	1000 GAL
11 TAC-4002	$MgSO_4$	0	0	0	NA	NOT REGULATED	--
12 TAC-4003	NaOH	2	0	0	NA	CORROSIVE TOXIC	1000 GAL CORROSIVE 1000 GAL TOXIC
13 TAC-4006	NaOH	2	0	0	NA	CORROSIVE TOXIC	1000 GAL CORROSIVE 1000 GAL TOXIC
14 TAC-4007	H_2SO_4	3	0	2	NA	CORROSIVE TOXIC	1000 GAL CORROSIVE 1000 GAL TOXIC
15 TAC-4010	NaOH	2	0	0	NA	CORROSIVE TOXIC	1000 GAL CORROSIVE 1000 GAL TOXIC
16 TAC-4011	H_2SO_4	3	0	2	NA	CORROSIVE TOXIC	1000 GAL CORROSIVE 1000 GAL TOXIC

IBC – INTERNATIONAL BUILDING CODE
MAQ – MAXIMUM ALLOWABLE QUANTITY

NO	DATE	CLASS REV	ADC	DESCRIPTION	DWN	DES	CHKD	SUB	APP

AECOM

RLWTF-UP LOW LEVEL WASTE SUBPROJECT

EQUIPMENT SCHEDULE

BLDG. 230 TA-50

DRAWN VHJ V. DAVISON
DESIGN S. MOORE
CHECKED C. MOYERS
DATE 5/8/14

SUBMITTED MANNY TARIN
APPROVED FOR RELEASE ED ARTIGLIA

Los Alamos NATIONAL LABORATORY PO Box 1663 Los Alamos, New Mexico 87545

SHEET Q-7100
138 OF 434

CLASSIFICATION REVIEWER DATE

PROJECT ID 100761
DRAWING NO C55864
REV 0

CHARLES MOYERS NEW MEXICO 16639 REGISTERED PROFESSIONAL ENGINEER
05-04-14

68127

File Location: P:\RLWTF LOW-LEVEL WASTE FACILITY\300 CAD\C55864 MAIN BUILDING\SHEETS\11 EQUIPMENT\55864-Q-7100-R0.DWG
Plotted By: MOORE, STEPHEN, Plot Date: Monday, May 05, 2014

PROCESS EQUIPMENT LIST – CHEMICAL DOSING PUMPS

ITEM NO.	LOCATION ROOM NO.	NO. REQUIRED	DESCRIPTION, MANUFACTURER OR APPROVED EQUAL			ALL EQUIPMENT SIZED FOR OPERATION AT 7500 FT. ELEVATION			FURNISHED BY
24 P-4001	1011	1	PUMP TYPE METERING	PUMPING RATE 1.6 GPH	INPUT POWER 18 WATTS	ELECTRICAL 120/1/60	MANUFACTURER NEPTUNE	MODEL NUMBER PZi8-12-VFC	SUBCONTRACTOR
25 P-4002	1011	1	PUMP TYPE METERING	PUMPING RATE 1.6 GPH	INPUT POWER 18 WATTS	ELECTRICAL 120/1/60	MANUFACTURER NEPTUNE	MODEL NUMBER PZi8-12-VFC	SUBCONTRACTOR
26 P-4003	1011	1	PUMP TYPE METERING	PUMPING RATE 5.7 GPH	INPUT POWER 30 WATTS	ELECTRICAL 120/1/60	MANUFACTURER NEPTUNE	MODEL NUMBER PZi4-32-VEC	SUBCONTRACTOR
27 P-4006	1011	1	PUMP TYPE METERING	PUMPING RATE 1.6 GPH	INPUT POWER 18 WATTS	ELECTRICAL 120/1/60	MANUFACTURER NEPTUNE	MODEL NUMBER PZi4-12-VEC	SUBCONTRACTOR
28 P-4007	1011	1	PUMP TYPE METERING	PUMPING RATE 1.6 GPH	INPUT POWER 18 WATTS	ELECTRICAL 120/1/60	MANUFACTURER NEPTUNE	MODEL NUMBER PZi4-12-FTC	SUBCONTRACTOR
29 P-4010	1011	1	PUMP TYPE METERING	PUMPING RATE 1.6 GPH	INPUT POWER 18 WATTS	ELECTRICAL 120/1/60	MANUFACTURER NEPTUNE	MODEL NUMBER PZi4-12-VEC	SUBCONTRACTOR
30 P-4011	1011	1	PUMP TYPE METERING	PUMPING RATE 1.6 GPH	INPUT POWER 18 WATTS	ELECTRICAL 120/1/60	MANUFACTURER NEPTUNE	MODEL NUMBER PZi4-12-FTC	SUBCONTRACTOR

NO	DATE	CLASS REV	ADC	DESCRIPTION	DWN	DES	CHKD	SUB	APP

AECOM

RLWTF-UP LOW LEVEL WASTE SUBPROJECT

EQUIPMENT SCHEDULE

BLDG. 230 TA-50

DRAWN	V DAVISON
DESIGN	S MOORE
CHECKED	C MOYERS
DATE	5/6/14

SUBMITTED MANNY TARIN

APPROVED FOR RELEASE ED ARTIGLIA

Los Alamos NATIONAL LABORATORY PO Box 1663 Los Alamos, New Mexico 87545

SHEET Q-7101

CLASSIFICATION | REVIEWER | DATE

PROJECT ID 100761 | DRAWING NO C55864 | REV 0

CHARLES MOYERS NEW MEXICO 16838 LICENSED PROFESSIONAL ENGINEER

05-08-14

File Location: P:\RLWTF LOW-LEVEL WASTE FACILITY\500 CAD\C55864 MAIN BUILDING\SHEETS\11 EQUIPMENT\55864-Q-7101-R0.DWG
Plotted By: MOORE, STEPHEN Plot Date: Monday, May 05, 2014

06121 :

PROCESS EQUIPMENT LIST

ITEM NO.	LOCATION ROOM NO.	NO. REQUIRED	DESCRIPTION, MANUFACTURER OR APPROVED EQUAL — ALL EQUIPMENT SIZED FOR OPERATION AT 7500 FT. ELEVATION								FURNISHED BY
32 P-1302	1011	1	PUMP TYPE CENTRIFUGAL	PUMPING RATE 45 GPM @ 37'	HORSEPOWER 1.5	ELECTRICAL 460/3/60	MANUFACTURER GRUNDFOS	MODEL NUMBER SERIES CM OR LC	MATERIAL 316 SS		SUBCONTRACTOR
33 P-1407	1011	1	PUMP TYPE CENTRIFUGAL	PUMPING RATE 51 GPM @ 26'	HORSEPOWER 1	ELECTRICAL 460/3/60	MANUFACTURER GRUNDFOS	MODEL NUMBER SERIES CM OR LC	MATERIAL 316 SS		SUBCONTRACTOR
34 P-1408	1011	1	PUMP TYPE CENTRIFUGAL	PUMPING RATE 30 GPM @ 15'	HORSEPOWER 1	ELECTRICAL 460/3/60	MANUFACTURER GRUNDFOS	MODEL NUMBER SERIES CM OR LC	MATERIAL 316 SS		SUBCONTRACTOR
35 P-1701	1011	1	PUMP TYPE DIAPHRAGM	PUMPING RATE 37 GPM @ 14'	HORSEPOWER NA	ELECTRICAL NA	MANUFACTURER ARO	MODEL NUMBER ARO-PD15X	MATERIAL 316 SS		SUBCONTRACTOR
36 P-1702	1011	1	PUMP TYPE DIAPHRAGM	PUMPING RATE 7 GPM @ 22'	HORSEPOWER NA	ELECTRICAL NA	MANUFACTURER ARO	MODEL NUMBER ARO-PD05X	MATERIAL PVDF		SUBCONTRACTOR
37 P-1703	1011	1	PUMP TYPE CENTRIFUGAL	PUMPING RATE 17 GPM @ 36'	HORSEPOWER 1	ELECTRICAL 460/3/60	MANUFACTURER GRUNDFOS	MODEL NUMBER SERIES CM OR LC	MATERIAL PVDF		SUBCONTRACTOR
38 P-1704	1011	1	PUMP TYPE DIAPHRAGM	PUMPING RATE 7 GPM @ 28'	HORSEPOWER NA	ELECTRICAL NA	MANUFACTURER ARO	MODEL NUMBER ARO-PD05X	MATERIAL PVDF		SUBCONTRACTOR
39 P-1705	1011	1	PUMP TYPE CENTRIFUGAL	PUMPING RATE 5 GPM @ 9'	HORSEPOWER 1	ELECTRICAL 460/3/60	MANUFACTURER GRUNDFOS	MODEL NUMBER SERIES CM OR LC	MATERIAL 316 SS		SUBCONTRACTOR
40 P-1706	1011	1	PUMP TYPE CENTRIFUGAL	PUMPING RATE 15 GPM @ 38'	HORSEPOWER 1	ELECTRICAL 460/3/60	MANUFACTURER GRUNDFOS	MODEL NUMBER SERIES CM OR LC	MATERIAL 316 SS		SUBCONTRACTOR
41 P-1707	1011	1	PUMP TYPE CENTRIFUGAL	PUMPING RATE 17 GPM @ 35'	HORSEPOWER 1	ELECTRICAL 460/3/60	MANUFACTURER GRUNDFOS	MODEL NUMBER SERIES CM OR LC	MATERIAL 316 SS		SUBCONTRACTOR
42 FLT-1101	1011	1	TYPE EQUIPMENT ROUGHING FILTER	MATERIAL STAINLESS	MANUFACTURER EATON	MODEL NUMBER MCF	MEDIA RETENTION 150 MICRONS	MEDIA SLOTTED WEDGE MESH			SUBCONTRACTOR
43 FLT-1401	1011	1	TYPE EQUIPMENT ION EXCHANGE	MATERIAL FIBERGLASS	MANUFACTURER PENTAIR	MODEL NUMBER 31418	DIAMETER 36"	HEIGHT 57"	MEDIA RETENTION PERCHLORATE	MEDIA IONAC SR-6	SUBCONTRACTOR
44 FLT-1402	1011	1	TYPE EQUIPMENT ION EXCHANGE	MATERIAL FIBERGLASS	MANUFACTURER PENTAIR	MODEL NUMBER 31418	DIAMETER 36"	HEIGHT 57"	MEDIA RETENTION PERCHLORATE	MEDIA IONAC SR-6	SUBCONTRACTOR
45 FLT-1403	1011	1	TYPE EQUIPMENT ION EXCHANGE	MATERIAL FIBERGLASS	MANUFACTURER PENTAIR	MODEL NUMBER 31418	DIAMETER 36"	HEIGHT 57"	MEDIA RETENTION CU/ZU	MEDIA SCU/SCP	SUBCONTRACTOR
46 FLT-1404	1011	1	TYPE EQUIPMENT ION EXCHANGE	MATERIAL FIBERGLASS	MANUFACTURER PENTAIR	MODEL NUMBER 31418	DIAMETER 36"	HEIGHT 57"	MEDIA RETENTION CU/ZU	MEDIA SCU/SCP	SUBCONTRACTOR
47 FLT-1405	1011	1	TYPE EQUIPMENT ION EXCHANGE	MATERIAL FIBERGLASS	MANUFACTURER PENTAIR	MODEL NUMBER 31418	DIAMETER 36"	HEIGHT 57"	MEDIA RETENTION ORGANICS	MEDIA ACTIVATED CARBON	SUBCONTRACTOR
48 FLT-1406	1011	1	TYPE EQUIPMENT ION EXCHANGE	MATERIAL FIBERGLASS	MANUFACTURER PENTAIR	MODEL NUMBER 31418	DIAMETER 36"	HEIGHT 57"	MEDIA RETENTION ORGANICS	MEDIA ACTIVATED CARBON	SUBCONTRACTOR

NO	DATE	CLASS REV	ADC	DESCRIPTION	DWN	DES	CHKD	SUB	APP

AECOM

RLWTF-UP LOW LEVEL WASTE SUBPROJECT

EQUIPMENT SCHEDULE

DRAWN V. DAVISON
DESIGN S. MOORE
CHECKED C. MOYERS
DATE 5/8/14

BLDG. 230 TA-50

SUBMITTED MANNY TARIN
APPROVED FOR RELEASE ED ARTIGLIA

Los Alamos NATIONAL LABORATORY PO Box 1663 Los Alamos, New Mexico 87545

SHEET Q-7102
140 OF 434

CLASSIFICATION REVIEWER DATE

PROJECT ID 100761
DRAWING NO C55864
REV 0

CHARLES MOYERS NEW MEXICO 18539 REGISTERED PROFESSIONAL ENGINEER
05-09-14

16121 :

File Location: P:\RLWTF LOW-LEVEL WASTE FACILITY\500 CAD\C55864 MAIN BUILDING\SHEETS\11 EQUIPMENT\55864-Q-7102-R0.DWG
Plotted By: MOORE, STEPHEN, Plot Date: Monday, May 05, 2014

PROCESS EQUIPMENT LIST

ITEM NO.	LOCATION ROOM NO.	NO. REQUIRED	DESCRIPTION, MANUFACTURER OR APPROVED EQUAL — ALL EQUIPMENT SIZED FOR OPERATION AT 7500 FT. ELEVATION	FURNISHED BY
49 FLT-1704	1011	1	EQUIPMENT: ROTARY PRESS; ELECTRICAL: 480/3/60; INPUT POWER: 8.78 kW; MANUFACTURER: PRIME SOLUTION; MODEL NUMBER: RFP185-SKE; PUMP TYPE: ROTARY LOBE; COMPRESSOR	SUBCONTRACTOR
52 ENCL-1701	1011	1	SEE SPECIFICATION SECTION 11 5311.08	SUBCONTRACTOR
53 ENCL-1702	1011	1	SEE SPECIFICATION SECTION 11 5311.08	SUBCONTRACTOR
54 ENCL-1703	1011	1	SEE SPECIFICATION SECTION 44 4616	SUBCONTRACTOR
55 EVAP-1701 (1)	1011	1	EQUIPMENT: EVAPORATOR MECHANICAL SKID; ELECTRICAL: 480/3/60; INPUT POWER: 100 kW; MANUFACTURER: ISA CORP; MODEL NUMBER: CE-500 (INCLUDES VACUUM SYSTEM, COMPRESSOR SYSTEM, CONTROL PANEL)	SUBCONTRACTOR
56 EVAP-1702 (1)	1011	1	EQUIPMENT: EVAPORATOR/CONDENSATE CHAMBERS INCLUDES P-1708(AIR OPERATED CONCENTRATE PUMP) AND P-1710(CENTRIFUGAL CONDENSATE PUMP)	SUBCONTRACTOR
57 FLT-1201	1011	1	TYPE EQUIPMENT: MICROFILTER; ELECTRICAL: 120/1/60; MANUFACTURER: SIEMENS; MODEL NUMBER: EFC-1200; MODULES: 12; TUBES: 120	SUBCONTRACTOR
P-1201	1011	1	PUMP TYPE: CENTRIFUGAL; PUMPING RATE: 350 GPM @ 110'; HORSEPOWER: 20 HP; ELECTRICAL: 480/3/60; MANUFACTURER: GOULDS; MODEL: 3196MTX 3X4X13; MATERIAL: 316 SST	
P-1709	1011	1	PUMP TYPE: DIAPHRAGM; PUMPING RATE: 15 GPM @ 50'; AIR PRESSURE: 30 PSI @ 75 CFM; MANUFACTURER: ARO; MODEL: 666152-3EB-C; MATERIAL: CAST IRON/SANTOPRENE	
PAC-4201	1011	1	PUMP TYPE: DIAPHRAGM; PUMPING RATE: 20 GPM @ 130'; AIR PRESSURE: 70 PSI @ 13 CFM; MANUFACTURER: ARO; MODEL: 666152-344-C; MATERIAL: POLYPROP/TEFLON	
TK-1102	1011	1	CAPACITY: 880 GAL; DIAMETER: 5'; HEIGHT: 6'; BOTTOM CONFIGURATION: FLAT; MATERIAL: FRP	
TAC-4200	1011	1	CAPACITY: 250 GAL; WIDTH: 40'; HEIGHT: 33 1/2"; LENGTH: 51"; BOTTOM CONFIGURATION: FLAT; MATERIAL: POLYPROPYLENE	
TAC-4201	1011	1	CAPACITY: 250 GAL; WIDTH: 40'; HEIGHT: 33 1/2"; LENGTH: 51"; BOTTOM CONFIGURATION: FLAT; MATERIAL: POLYPROPYLENE	
58 SKID-4322	1011	1	TYPE EQUIPMENT: RO-CIP; ELECTRICAL: 480/3/60; POWER: 5 HP; MATERIAL: LPE-TANK; MANUFACTURER: SIEMENS; MODEL/PART NUMBER: CIP-30	SUBCONTRACTOR
59 ROU-1301		1	TYPE EQUIPMENT: REVERSE OSMOSIS; MATERIAL: FRP-RO HOUSING; MANUFACTURER: SIEMENS; MODEL/PART NUMBER: M83R012 OR M83R006	SUBCONTRACTOR
F-1301	1011	1	TYPE EQUIPMENT: CARTRIDGE FILTER; CARTRIDGE: DOUBLE OPEN ENDED; MATERIAL: SS304L; MANUFACTURER: SHELLCO; MODEL/PART NUMBER: 4FOS3C-304-2F-ML-P	
P-1303		1	PUMP TYPE: CENTRIFUGAL; PUMPING RANGE: 40 GPM @ 610'; HORSEPOWER: 15; ELECTRICAL: 480/3/60; MANUFACTURER: GRUNDFOS; MODEL NUMBER: CRN10-14; MATERIAL:	

KEYED NOTES

(1) THE EVAPORATOR IS COMPRISED OF TWO SKIDS. EVAP-1701 AND EVAP-1702 ARE CONNECTED BY FREON PIPING.

NO	DATE	CLASS REV	ADC	DESCRIPTION	DWN	DES	CHKD	SUB	APP

AECOM

RLWTF-UP LOW LEVEL WASTE SUBPROJECT

EQUIPMENT SCHEDULE

BLDG. 230 TA-50

DRAWN V. DAVISON 5/8/14
DESIGN S. MOORE 5/8/14
CHECKED C. MOYERS 5/8/14
DATE 5/8/14

SUBMITTED MANNY TARIN
APPROVED FOR RELEASE ED ARTIGLIA

Los Alamos NATIONAL LABORATORY PO Box 1663 Los Alamos, New Mexico 87545

SHEET Q-7103
141 OF 434

CLASSIFICATION REVIEWER DATE

PROJECT ID 100761
DRAWING NO C55864
REV 0

CHARLES MOYERS NEW MEXICO 18538 REGISTERED PROFESSIONAL ENGINEER 05-01-14

25121

File Location: P:\RLWTF LOW-LEVEL WASTE FACILITY\500 CAD\C55864 MAIN BUILDING\SHEETS\11 EQUIPMENT\C55864-Q-7103-R0.DWG
Plotted By: MOORE_STEPHEN Plot Date: Monday, May 05, 2014

FIRE PROTECTION AND FIRE ALARM LEGEND

(ALL ABBREVIATIONS SHOWN ARE NOT NECESSARILY USED ON THE DRAWINGS)

ABBREVIATIONS

ACV	ALARM CHECK VALVE
AC	AIR CONDITIONING
AFF	ABOVE FINISHED FLOOR
AFG	ABOVE FINISHED GRADE
AHU	AIR HANDLING UNIT
ALRM	ALARM SIGNAL
BDD	BACK DRAFT DAMPER
BFP	BACKFLOW PREVENTER
BHP	BRAKE HORSEPOWER
BMCS	BUILDING MANAGEMENT CONTROL SYSTEM
BOD	BOTTOM OF DUCT
BOP	BOTTOM OF PIPE
BP	BUILDING PRESSURE
BTUH	BTU PER HOUR
CAV	CONSTANT AIR VOLUME
CO	CLEANOUT
CFM	CUBIC FEET PER MINUTE
CIE	CONTRACTOR INSTALLED EQUIPMENT
CONT.	CONTINUATION
D	DRAIN
DEMO	DEMOLISH, DEMOLITION
DV	DELUGE VALVE
DX	DIRECT EXPANSION
ENT	ENTERING
EP	ELECTRIC-PNEUMATIC
EXH	EXHAUST
°F	DEGREES FAHRENHEIT
FC	FLEXIBLE CONNECTOR
FD	FLOOR DRAIN
FDC	FIRE DEPARTMENT CONNECTION
FDMPR	FIRE DAMPER
F.G.	FILTER GAUGE
FLEX	FLEXIBLE
FM	FACTORY MUTUAL
FMS	FACILITY MANAGEMENT SYSTEM
FPM	FEET PER MINUTE
FT	FLAT TOP
FT.	FEET
GFE	GOVERNMENT FURNISHED EQUIPMENT
GIE	GOVERNMENT INSTALLED EQUIPMENT
GPH	GALLONS PER HOUR
GPM	GALLONS PER MINUTE
HEPA	HIGH EFFICIENCY PARTICULATE ARRESTOR
HD	HEAD, HUB DRAIN
HGT	HEIGHT
HOA	HAND-OFF-AUTOMATIC
HORIZ	HORIZONTAL
HP	HORSEPOWER
HSTAT	HUMIDISTAT
HTG	HEATING
HTR	HEATER
HVAC	HEATING, VENTILATING AND AIR CONDITIONING
HW	HOT WATER
HX	HEPA EXHAUST AIR
HYD	HYDRANT
HZ	HERTZ
IN	INCHES
KW	KILOWATT
KWH	KILOWATT HOUR
LX	LABORATORY EXHAUST AIR
MA	MIXED AIR
MIN	MINIMUM
NA	NOT APPLICABLE
NAC	NOTIFICATION ALARM CIRCUIT
NIC	NOT IN CONTRACT
NO.	NUMBER (QUANTITY)
OA	OUTSIDE AIR
OBD	OPPOSED BLADE DAMPER
PCM	PROGRAMMABLE CONTROL MODULE
POC	POINT OF CONNECTION TO EXISTING
POR	POINT OF REMOVAL FROM EXISTING
PRV	PRESSURE REDUCING VALVE
PSIG	POUNDS PER SQUARE INCH GAGE
PWC	POTABLE WATER COLD
QTY	QUANTITY
RA	RETURN AIR
RLA	RELIEF AIR
RPM	REVOLUTIONS PER MINUTE
SA	SUPPLY AIR
SLC	SIGNALING LINE CIRCUIT
SP	STATIC PRESSURE (INCHES OF WATER)
SUPR	SUPERVISORY SIGNAL
TX	TOILET EXHAUST
TYP.	TYPICAL
UL	UNDERWRITERS LABORATORIES
V	VALVE
VAC	VOLTS, ALTERNATING CURRENT
VAV	VARIABLE AIR VOLUME
VD	VOLUME DAMPER
VEL	VELOCITY
VTR	VENT THRU ROOF
VX	VACUUM EXHAUST
W/	WITH

FIRE PROTECTION SYMBOLS

SYMBOL	DESCRIPTION
	CHECK VALVE
	SPRINKLER RISER
	INDICATING VALVE
	FIRE DEPARTMENT CONNECTION FREE STANDING
	FIRE DEPARTMENT CONNECTION WALL MOUNTED
	TEST CONNECTION
	FIRE HYDRANT – TWO HOSE OUTLETS
	FIRE HYDRANT – ONE HOSE OUTLET
	FIRE HYDRANT – TWO HOSE OUTLETS & PUMPER CONNECTION
	WALL HYDRANT – TWO HOSE OUTLETS
	WATER SYSTEM BLOCK VALVE
D	REDUCER
	ALARM VALVE
	DRY-PIPE VALVE
	DELUGE VALVE
	ALARM GONG
TS	P&ID, TAMPER SWITCH
FS	P&ID, FIRE SUPPRESSION – WATER FLOW SWITCH
PS	P&ID, FIRE SUPPRESSION – PRESSURE SWITCH
	SPRINKLER – DRY SIDE WALL
	SPRINKLER – PENDENT W/DROP NIPPLE
	SPRINKLER – UPRIGHT
	END OF LINE RESTRAINT TO UNISTRUT IN CONCRETE TEE
	END OF LINE RESTRAINT TO METAL STUD
	HANGER TO UNISTRUT IN CONCRETE TEE
	HANGER TO METAL STUD
S	PIPE SUPPORT FROM FINISHED FLOOR
	TRAPEZE HANGER WITH PIPE SUPPORTED BY RING HANGER
	TRAPEZE HANGER WITH PIPE ABOVE
	TRAPEZE HANGER FROM METAL STUDS WITH PIPE SUPPORTED BY RING HANGER

FIRE PROTECTION SYMBOLS (CONT.)

SYMBOL	DESCRIPTION
CA	COMPRESSED AIR
D	DRAIN
F	FIRE PROTECTION WATER
	DIRECTION OF FLOW
	REDUCER OR INCREASER
	ECCENTRIC REDUCER
	TOP CONNECTION, 45° OR 90°
	BOTTOM CONNECTION, 45° OR 90°
	SIDE CONNECTION
	CAPPED OUTLET
	RISE OR DROP IN PIPE
	RISE IN PIPE
	UNION
	UNIVERSAL TEMPERATURE-PRESSURE FITTING
	OS&Y CONTROL VALVE
	STRAINER
	THERMOMETER
	PRESSURE GAGE
	GAGE & GAGE COCK
	BALL VALVE
	LINE BREAK
	POST INDICATING VALVE
	INDICATING CONTROL VALVE
	GROUND VALVE
AX	HYDRAULIC NODE FOR MAIN
AX / XX	HYDRAULIC NODE FOR BRANCH LINE
W	4-WAY BRACE TO CONCRETE WALL
F	4-WAY BRACE TO CONCRETE FLOOR
F	LONGITUDINAL BRACE TO UNISTRUT IN STEM OF CONCRETE TEE
	LATERAL BRACE TO UNISTRUT IN STEM OF CONCRETE TEE
T	LONGITUDINAL BRACE TO SIDE OF CONCRETE TEE
T	LATERAL BRACE TO SIDE OF CONCRETE TEE

FIRE ALARM SYMBOLS

SYMBOL	DESCRIPTION
FACP	BUILDING FIRE ALARM CONTROL PANEL
FCPS	REMOTE POWER SUPPLY PANEL
ANN	FIRE SYSTEM ANNUNCIATOR
	MANUAL PULL STATION
	PHOTOELECTRIC SMOKE DETECTOR
	DUCT SMOKE DETECTOR (PHOTOELECTRIC)
	DUCT HEAT DETECTOR
XP10	10 ZONE MONITOR MODULE
MM	MONITOR MODULE
R	CONTROL RELAY MODULE
	FIRE ALARM HORN/STROBE
	FIRE ALARM VISUAL DEVICE
S	PRESSURE SWITCH
WF	FLOW SWITCH
T	VALVE SUPERVISORY SWITCH
PM	POST INDICATOR VALVE TAMPER SWITCH
	POST INDICATING VALVE
	INDICATING CONTROL VALVE
	SPRINKLER RISER
	TRANSIENT VOLTAGE SURGE SUPPRESSOR
1 X	INTERLOCKS TO FIRE SYSTEM FROM OTHER SYSTEMS
	WATERFLOW ALARM GONG

GENERAL SYMBOLS

ELLIPSE SYMBOL INDICATES A KEYED NOTE THE NUMBER REFERS TO A SPECIFIC NOTE LISTED IN THE KEYED NOTE LIST

EQUIPMENT CODE LISTING

ALTITUDE VALVE

ALTV ALTITUDE VALVE

BACKFLOW PREVENTER

BFP BACKFLOW PREVENTER

COMPRESSORS

CA AIR COMPRESSOR (FIRE PROTECTION)

FIRE ALARM

EOLR END OF LINE RESISTOR
FACP FIRE ALARM CONTROL PANEL
MM MONITOR MODULE
NAC NOTIFICATION APPLIANCE CIRCUIT
SLC SIGNALING LINE CIRCUIT
VAC VOLTS ALTERNATING CURRENT
WF WATER FLOW

BACKFLOW PREVENTER

BFP BACKFLOW PREVENTER

HVAC UNITS

AHU AIR HANDLING UNIT

PUMPS

PF FIRE PUMP

DAVID TOMECEK NEW MEXICO 19234 LICENSED PROFESSIONAL ENGINEER

05-06-2014

NO	DATE	CLASS REV	ADC	DESCRIPTION	DWN	DES	CHKD	SUB	APP

AECOM

RLWTF-UP LOW LEVEL WASTE SUBPROJECT

FIRE PROTECTION ABBREVIATIONS & LEGEND SYMBOLS

BLDG. 230 TA-50

DRAWN	C AZHOC
DESIGN	M FERRARESI
CHECKED	B SMEATON
DATE	5/8/14

SUBMITTED MANUEL TARIN

APPROVED FOR RELEASE ED ARTIOLIA

Los Alamos NATIONAL LABORATORY PO Box 1663 Los Alamos, New Mexico 87545

SHEET F-0101

142 OF 434

CLASSIFICATION REVIEWER DATE

PROJECT ID 100761

DRAWING NO C55864

REV 0

121193

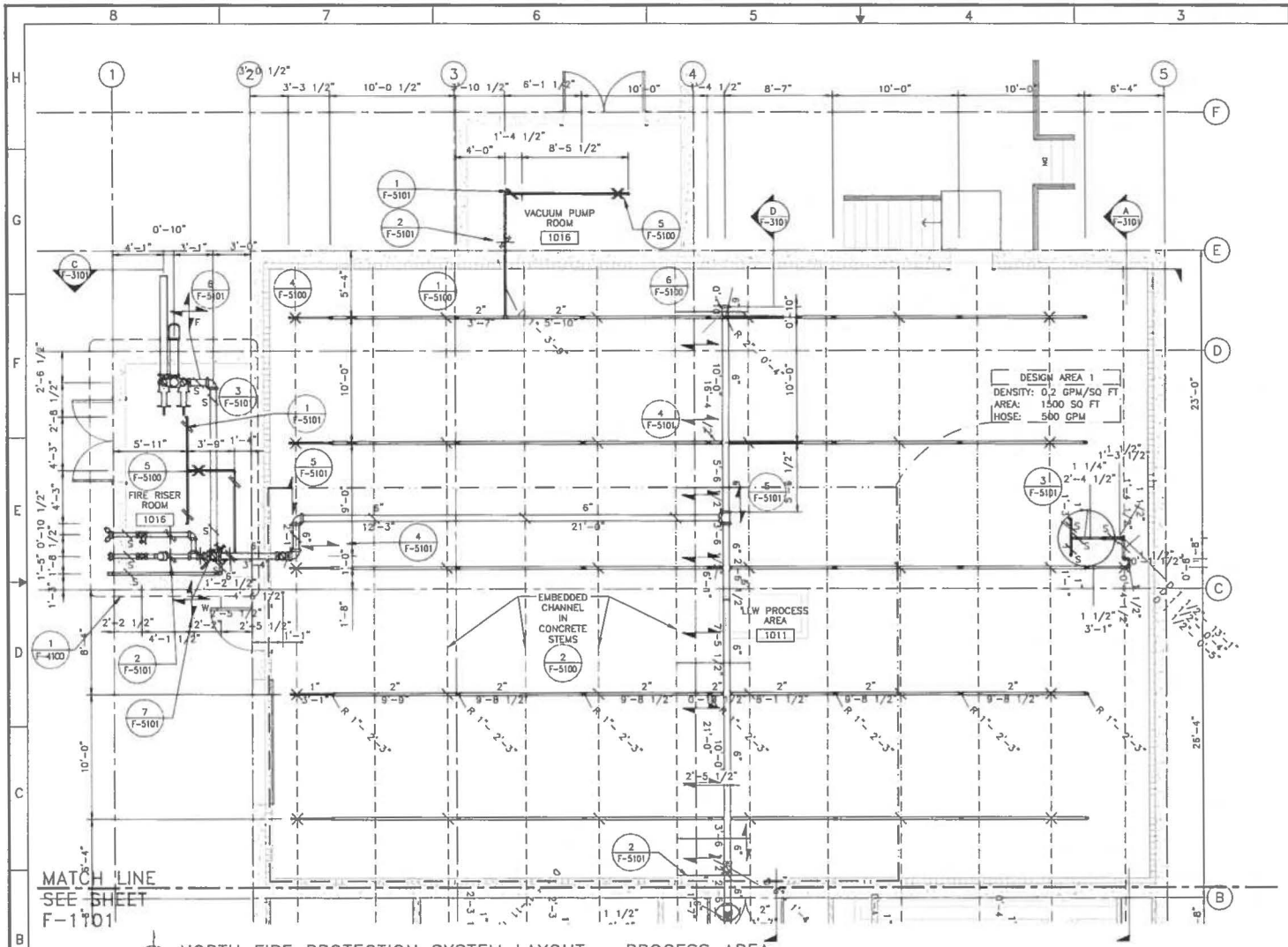

NORTH FIRE PROTECTION SYSTEM LAYOUT – PROCESS AREA

1/4"=1'-0"

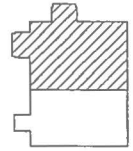

KEY PLAN
SCALE: NONE

GENERAL NOTES:

1. IF THIS SHEET IS NOT 24"x 36", THEN IT IS A REDUCED SIZE PLOT. USE GRAPHIC SCALE ACCORDINGLY.
2. FIRE PROTECTION PIPING & SPRINKLER INSTALLATION SHALL BE PER NFPA 13-2007, FOR ORDINARY HAZARD GROUP 2.
3. NOT USED.
4. THE UNSUPPORTED LENGTH BETWEEN THE END SPRINKLER AND THE LAST HANGER ON THE LINE SHALL NOT BE GREATER THAN 36" FOR 1" PIPE, 48" FOR 1-1/4" PIPE AND 60" FOR 1-1/2" OR LARGER PIPE.
5. THERE SHALL NOT BE LESS THAN ONE HANGER FOR EACH SECTION OF PIPE.
6. SEE DETAILS ON SHEET F-5100 FOR ADDITIONAL HANGER INSTALLATION REQUIREMENTS.
7. VERTICAL RISERS SHALL BE SUPPORTED WITHIN 24" OF THEIR HORIZONTAL CONNECTIONS. INTERMEDIATE SUPPORTS SHALL BE PROVIDED TO LIMIT AXIAL MOVEMENT.

NO	DATE	CLASS REV	ADC	DESCRIPTION	DWN	DES	CHKD	SUB	APP

AECOM

RLWTF-UP LOW LEVEL WASTE SUBPROJECT

NORTH FIRE PROTECTION SYSTEM LAYOUT – PROCESS AREA

BLDG. 230 TA-50

DRAWN	C AZNOE
DESIGN	M FERRARESI
CHECKED	B SMEATON
DATE	5/8/14

SUBMITTED: MANUEL TARIN

APPROVED FOR RELEASE: ED ARTIGLIA

Los Alamos NATIONAL LABORATORY PO Box 1663 Los Alamos, New Mexico 87545

SHEET F-1100

143 OF 434

CLASSIFICATION | REVIEWER | DATE

PROJECT ID 100761 | DRAWING NO C55864 | REV 0

DAVID TOMECEK NEW MEXICO LICENSED PROFESSIONAL ENGINEER

05-06-2014

: 121194

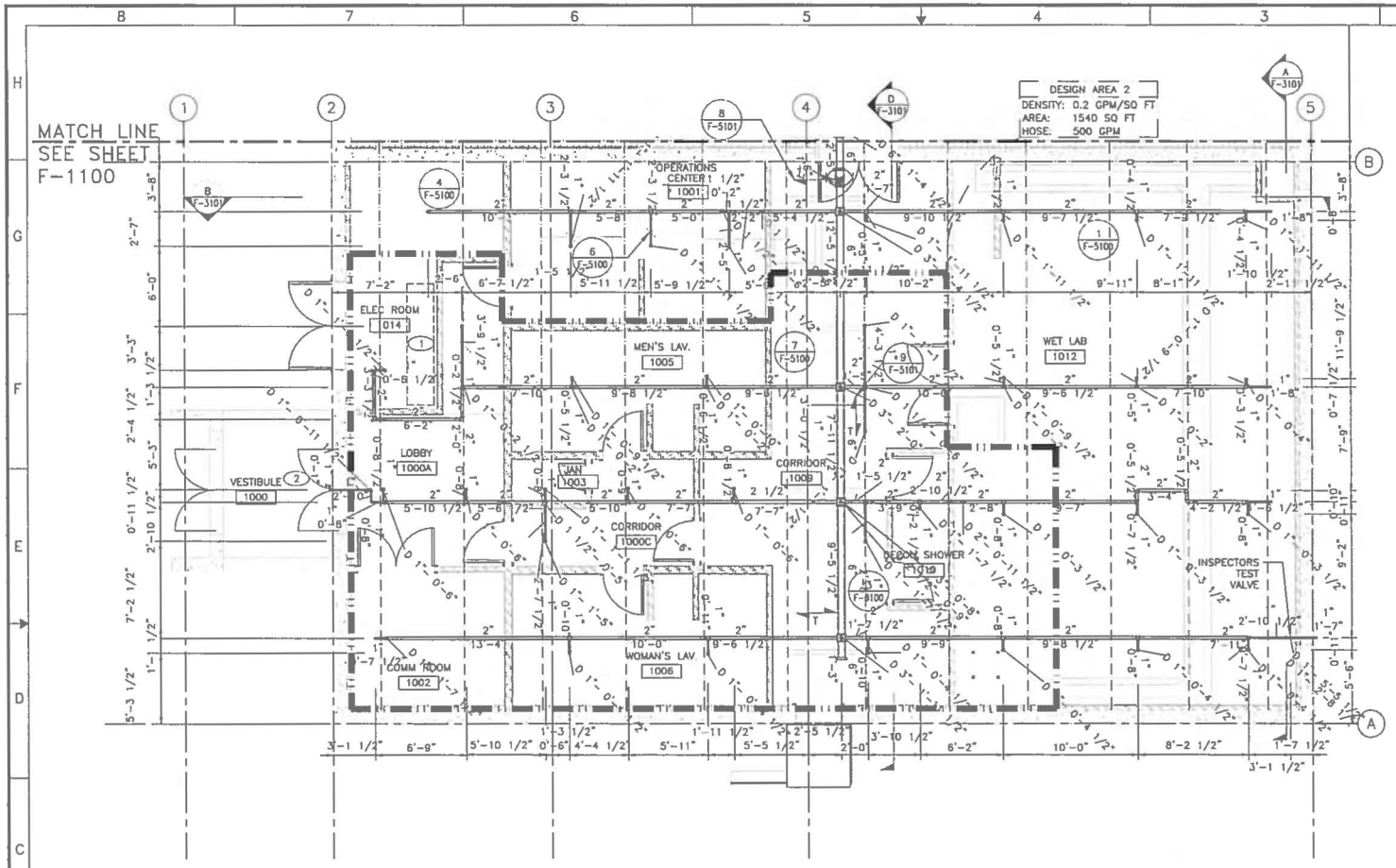

SOUTH FIRE PROTECTION SYSTEM LAYOUT – WET LAB, SUPPORT AREA

0' 1' 2' 4' 8' 8'
1/4"=1'-0"

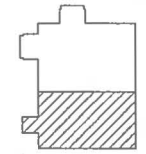

KEY PLAN
SCALE: NONE

GENERAL NOTES:

1. IF THIS SHEET IS NOT 24"x 36", THEN IT IS A REDUCED SIZE PLOT. USE GRAPHIC SCALE ACCORDINGLY.
2. FIRE PROTECTION PIPING & SPRINKLER INSTALLATION SHALL BE PER NFPA 13-2007, FOR ORDINARY HAZARD GROUP 2.
3. VERTICAL RISERS SHALL BE SUPPORTED WITHIN 24" OF THEIR HORIZONTAL CONNECTIONS. INTERMEDIATE SUPPORTS SHALL BE PROVIDED TO LIMIT AXIAL MOVEMENT.
4. THE UNSUPPORTED LENGTH BETWEEN THE END SPRINKLER AND THE LAST HANGER ON THE LINE SHALL NOT BE GREATER THAN 36" FOR 1" PIPE, 48" FOR 1-1/4" PIPE AND 60" FOR 1-1/2" OR LARGER PIPE.
5. THERE SHALL NOT BE LESS THAN ONE HANGER FOR EACH SECTION OF PIPE.
6. SEE DETAILS ON SHEET F-5100 FOR ADDITIONAL HANGER INSTALLATION REQUIREMENTS.

KEYED NOTES:

(1) ELECTRICAL PANEL. NO PIPING OVERHEAD.

(2) SIDEWALL SPRINKLER SWING JOINT, ROTATED TO MATCH SLOPE OF VESTIBULE CEILING.

NO	DATE	CLASS REV	ADC	DESCRIPTION	DWN	DES	CHKD	SUB	APP

AECOM

RLWTF-UP LOW LEVEL WASTE SUBPROJECT

SOUTH FIRE PROTECTION
SYSTEM LAYOUT – WET LAB, SUPPORT AREA

DRAWN	C AZNOE
DESIGN	M FERRARESI
CHECKED	B SWEATON
DATE	3/6/14

BLDG. 230 TA-50

SUBMITTED MANUEL TARIN
APPROVED FOR RELEASE ED ARTIOLIA

Los Alamos NATIONAL LABORATORY PO Box 1663 Los Alamos, New Mexico 87545

SHEET F-1101
144 OF 434

CLASSIFICATION | REVIEWER | DATE

PROJECT ID 100761 | DRAWING NO C55864 | REV 0

DAVID TOMECEK NEW MEXICO 12746 LICENSED PROFESSIONAL ENGINEER
05-06-2014

121195

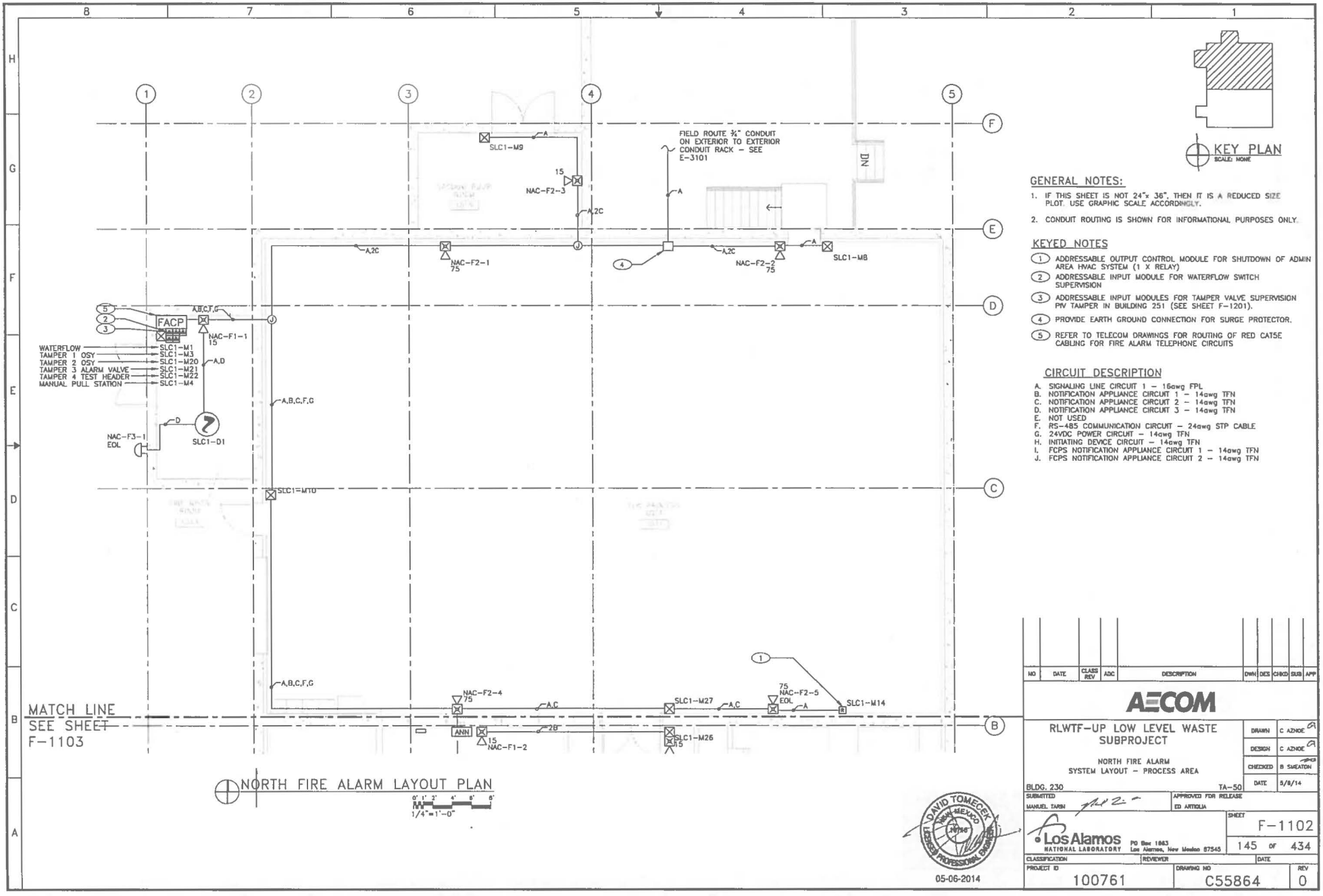

GENERAL NOTES:

1. IF THIS SHEET IS NOT 24"x 36", THEN IT IS A REDUCED SIZE PLOT. USE GRAPHIC SCALE ACCORDINGLY.
2. CONDUIT ROUTING IS SHOWN FOR INFORMATIONAL PURPOSES ONLY.

KEYED NOTES

(1) ADDRESSABLE OUTPUT CONTROL MODULE FOR SHUTDOWN OF ADMIN AREA HVAC SYSTEM (1 X RELAY)
(2) ADDRESSABLE INPUT MODULE FOR WATERFLOW SWITCH SUPERVISION
(3) ADDRESSABLE INPUT MODULES FOR TAMPER VALVE SUPERVISION PIV TAMPER IN BUILDING 251 (SEE SHEET F-1201).
(4) PROVIDE EARTH GROUND CONNECTION FOR SURGE PROTECTOR.
(5) REFER TO TELECOM DRAWINGS FOR ROUTING OF RED CAT5E CABLING FOR FIRE ALARM TELEPHONE CIRCUITS

CIRCUIT DESCRIPTION

A. SIGNALING LINE CIRCUIT 1 – 16awg FPL
B. NOTIFICATION APPLIANCE CIRCUIT 1 – 14awg TFN
C. NOTIFICATION APPLIANCE CIRCUIT 2 – 14awg TFN
D. NOTIFICATION APPLIANCE CIRCUIT 3 – 14awg TFN
E. NOT USED
F. RS-485 COMMUNICATION CIRCUIT – 24awg STP CABLE
G. 24VDC POWER CIRCUIT – 14awg TFN
H. INITIATING DEVICE CIRCUIT – 14awg TFN
I. FCPS NOTIFICATION APPLIANCE CIRCUIT 1 – 14awg TFN
J. FCPS NOTIFICATION APPLIANCE CIRCUIT 2 – 14awg TFN

NO	DATE	CLASS REV	ADC	DESCRIPTION	DWN	DES	CHKD	SUB	APP

AECOM

RLWTF-UP LOW LEVEL WASTE SUBPROJECT

NORTH FIRE ALARM SYSTEM LAYOUT – PROCESS AREA

BLDG. 230 TA-50

DRAWN	C AZNOE		
DESIGN	C AZNOE		
CHECKED	B SWEATON		
DATE	5/8/14		

SUBMITTED MANUEL TARIN

APPROVED FOR RELEASE ED ARTIOLIA

Los Alamos NATIONAL LABORATORY PO Box 1663 Los Alamos, New Mexico 87545

SHEET F-1102

145 OF 434

CLASSIFICATION REVIEWER DATE

PROJECT ID 100761

DRAWING NO C55864

REV 0

DAVID TOMECEK NEW MEXICO 14736 LICENSED PROFESSIONAL ENGINEER

05-06-2014

56127

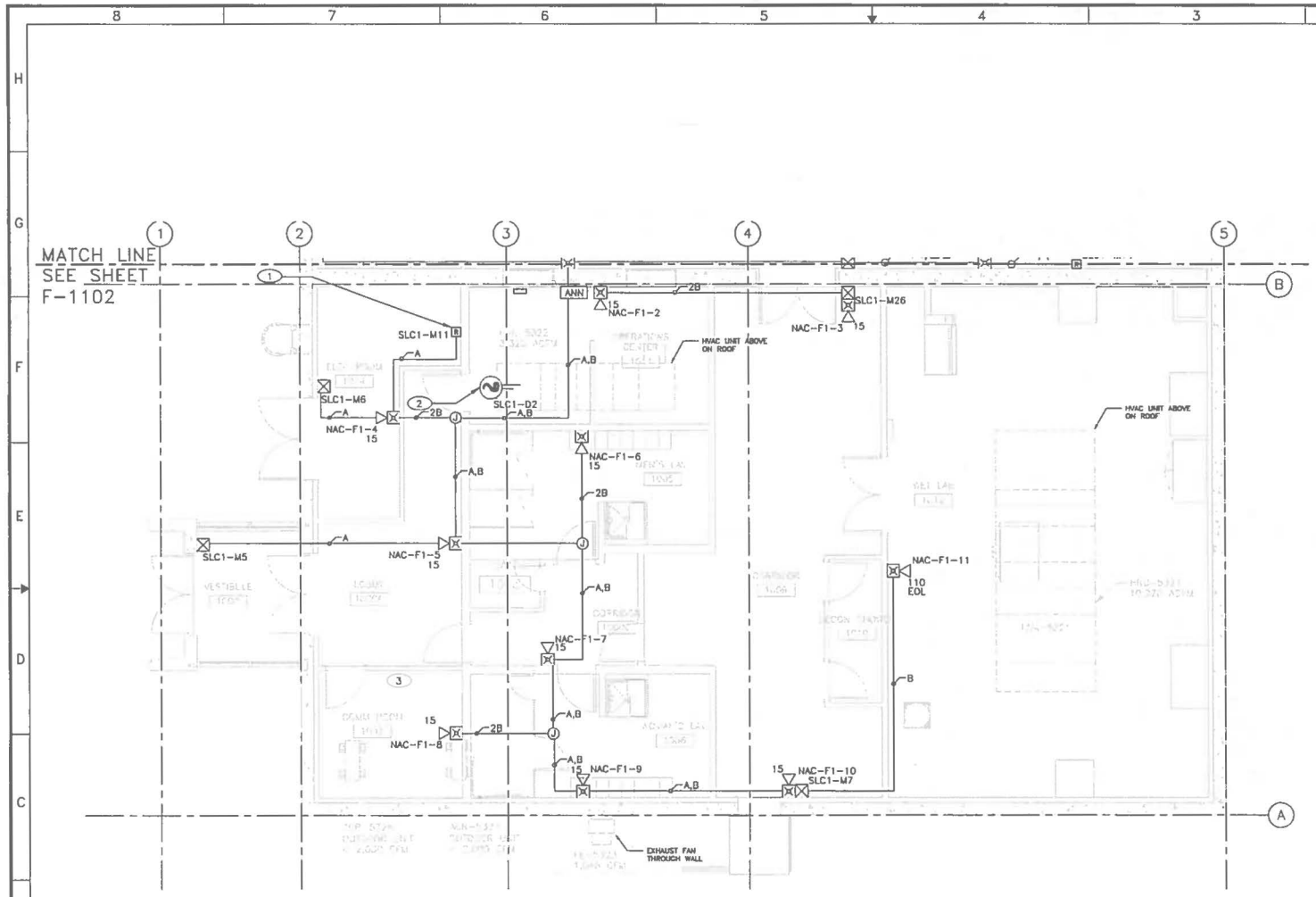

SOUTH FIRE ALARM LAYOUT PLAN

1/4"=1'-0"

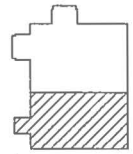

KEY PLAN
SCALE: NONE

GENERAL NOTES:

1. IF THIS SHEET IS NOT 24"x 36", THEN IT IS A REDUCED SIZE PLOT. USE GRAPHIC SCALE ACCORDINGLY.
2. CONDUIT ROUTING IS SHOWN FOR INFORMATIONAL PURPOSES ONLY.

KEYED NOTES

1. ADDRESSABLE OUTPUT CONTROL MODULE FOR DRAIN SOLENOID ACTIVATION. SEE RELAY XC-5501 ON E-4100, ENLARGED ELECTRICAL ROOM FLOOR PLAN FOR DETAILS.
2. ADDRESSABLE DUCT SMOKE DETECTOR FOR ADMIN AREA HVAC SYSTEM LOCATED ON ROOF
3. REFER TO TELECOM DRAWINGS FOR ROUTING OF RED CAT5E CABLING FOR FIRE ALARM TELEPHONE CIRCUITS

CIRCUIT DESCRIPTION

A. SIGNALING LINE CIRCUIT 1 – 16awg FPL
B. NOTIFICATION APPLIANCE CIRCUIT 1 – 14awg TFN
C. NOTIFICATION APPLIANCE CIRCUIT 2 – 14awg TFN
D. NOTIFICATION APPLIANCE CIRCUIT 3 – 14awg TFN
E. NOT USED
F. RS-485 COMMUNICATION CIRCUIT – 24awg STP CABLE
G. 24VDC POWER CIRCUIT – 14awg TFN
H. INITIATING DEVICE CIRCUIT – 14awg TFN
I. FCPS NOTIFICATION APPLIANCE CIRCUIT 1 – 14awg TFN
J. FCPS NOTIFICATION APPLIANCE CIRCUIT 2 – 14awg TFN

NO	DATE	CLASS REV	ADC	DESCRIPTION	DWN	DES	CHKD	SUB	APP

AECOM

RLWTF-UP LOW LEVEL WASTE SUBPROJECT

SOUTH FIRE ALARM
SYSTEM LAYOUT – WET LAB, SUPPORT AREA

BLDG. 230 TA-50

DRAWN	C AZNOE
DESIGN	C AZNOE
CHECKED	B SMEATON
DATE	5/8/14

SUBMITTED: MANUEL TARIN
APPROVED FOR RELEASE: ED ARTIGLIA

Los Alamos NATIONAL LABORATORY
PO Box 1663
Los Alamos, New Mexico 87545

SHEET F-1103
146 OF 434

CLASSIFICATION | REVIEWER | DATE

PROJECT ID 100761 | DRAWING NO C55864 | REV 0

DAVID TOMECEK NEW MEXICO LICENSED PROFESSIONAL ENGINEER

05-06-2014

: 121197

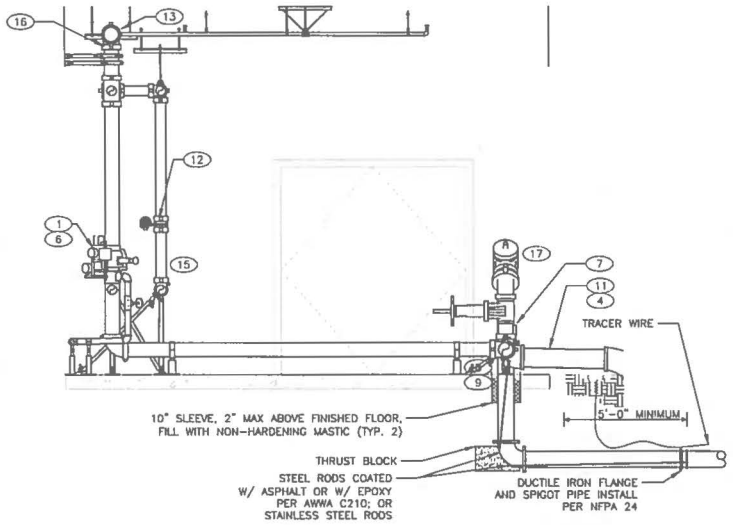

A F-4100 LLW RISER ELEVATION, FROM EAST

1/2"=1'-0"

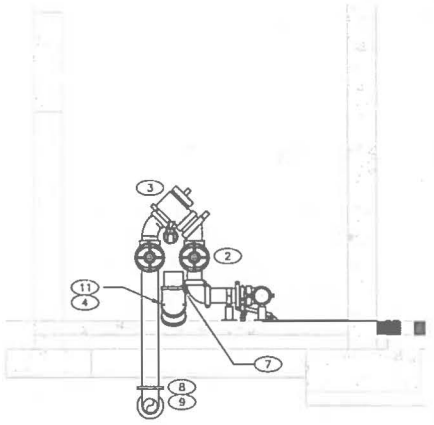

B F-4100 LLW RISER ELEVATION, FROM SOUTH

1/2"=1'-0"

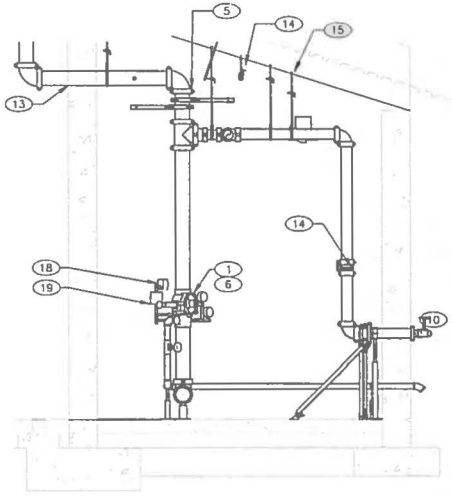

C F-4100 LLW RISER ELEVATION, FROM NORTH

1/2"=1'-0"

GENERAL NOTES:

1. IF THIS SHEET IS NOT 24"x 36", THEN IT IS A REDUCED SIZE PLOT. USE GRAPHIC SCALE ACCORDINGLY.
2. FIRE PROTECTION PIPING & SPRINKLER INSTALLATION SHALL BE PER NFPA 13-2007, FOR ORDINARY HAZARD GROUP 2.

KEYED NOTES:

(1) ALARM CHECK VALVE WITH COMPLETE UL-LISTED TRIM FOR RETARD CHAMBER AND PRESSURE SWITCH PER SPECIFICATION 21 13 13 WET PIPE SPRINKLER SYSTEMS. MONITOR WITH FIRE ALARM SYSTEM MONITOR MODULE.

(2) TAMPER SWITCH

(3) 6" REDUCED-PRESSURE BACKFLOW PREVENTION ASSEMBLY

(4) 8" DRAIN FOR BFP (ONE SIZE LARGER THAN BFP) WITH 45° ELBOW TURN DOWN.

(5) PROVIDE FLEXIBLE COUPLINGS AT TOP AND BOTTOM OF RISERS LONGER THAN 7'-0", AND FLEXIBLE COUPLING AT TOP OR BOTTOM OF RISER BETWEEN 3'-0" AND 7'-0"

(6) PROVIDE MINIMUM CLEARANCES FROM PERMANENT OBSTRUCTIONS FOR UNIT TESTING AND REPAIR (PER MANUFACTURER'S REQUIREMENTS).

(7) AIR GAP KIT. DRAIN PIPE SIZE MINIMUM ONE PIPE SIZE LARGER THAN BACKFLOW PREVENTER. ROUTE DRAIN PIPE TO DAYLIGHT & COVER EXPOSED END WITH 1/4" HARDWARE CLOTH.

(8) PROVIDE FLEXIBLE COUPLING WITHIN 24" OF FINISHED FLOOR.

(9) 10" FLOOR PENETRATION.

(10) PROVIDE TEST HEADER ON OUTSIDE WALL FOR FORWARD FLOW TESTS OF BACKFLOW PREVENTION ASSEMBLY. SEE SPECIFICATION FOR DETAILS.

(11) 12" WALL PENETRATION AT 0'-11" AFF.

(12) SUPERVISED, NORMALLY CLOSED, INDICATING BUTTERFLY VALVE.

(13) 10" WALL PENETRATION AT 12'-0" AFF.

(14) ROTATE SPRINKLER DEFLECTORS PARALLEL TO CEILING SLOPE.

(15) ATTACH TO METAL STUDS USING ITW BUILDEX SAMMY SH-DSTR-1 OR APPROVED EQUAL.

(16) PROVIDE FLEXIBLE COUPLING AT TOP AND BOTTOM OF RISERS LONGER THAN 7'-0" AND FLEXIBLE COUPLINGS AT TOP OR BOTTOM OF RISERS BETWEEN 3'-0" AND 7'-0".

(17) REDUCED PRESSURE BACKFLOW PREVENTION ASSEMBLY.

(18) PRESSURE SWITCH.

(19) RETARD CHAMBER.

05-06-2014

NO	DATE	CLASS REV	ADC	DESCRIPTION	DWN	DES	CHKD	SUB	APP

AECOM

RLWTF-UP LOW LEVEL WASTE SUBPROJECT

FIRE PROTECTION RISER ELEVATIONS

BLDG. 230 TA-50

DRAWN	M FERRARESI
DESIGN	M FERRARESI
CHECKED	B SWEATON
DATE	3/8/14

SUBMITTED MANUEL TARIN

APPROVED FOR RELEASE ED ARTIOLA

Los Alamos NATIONAL LABORATORY PO Box 1663 Los Alamos, New Mexico 87545

SHEET F-3100

147 OF 434

CLASSIFICATION REVIEWER DATE

PROJECT ID 100761

DRAWING NO C55864

REV 0

121198

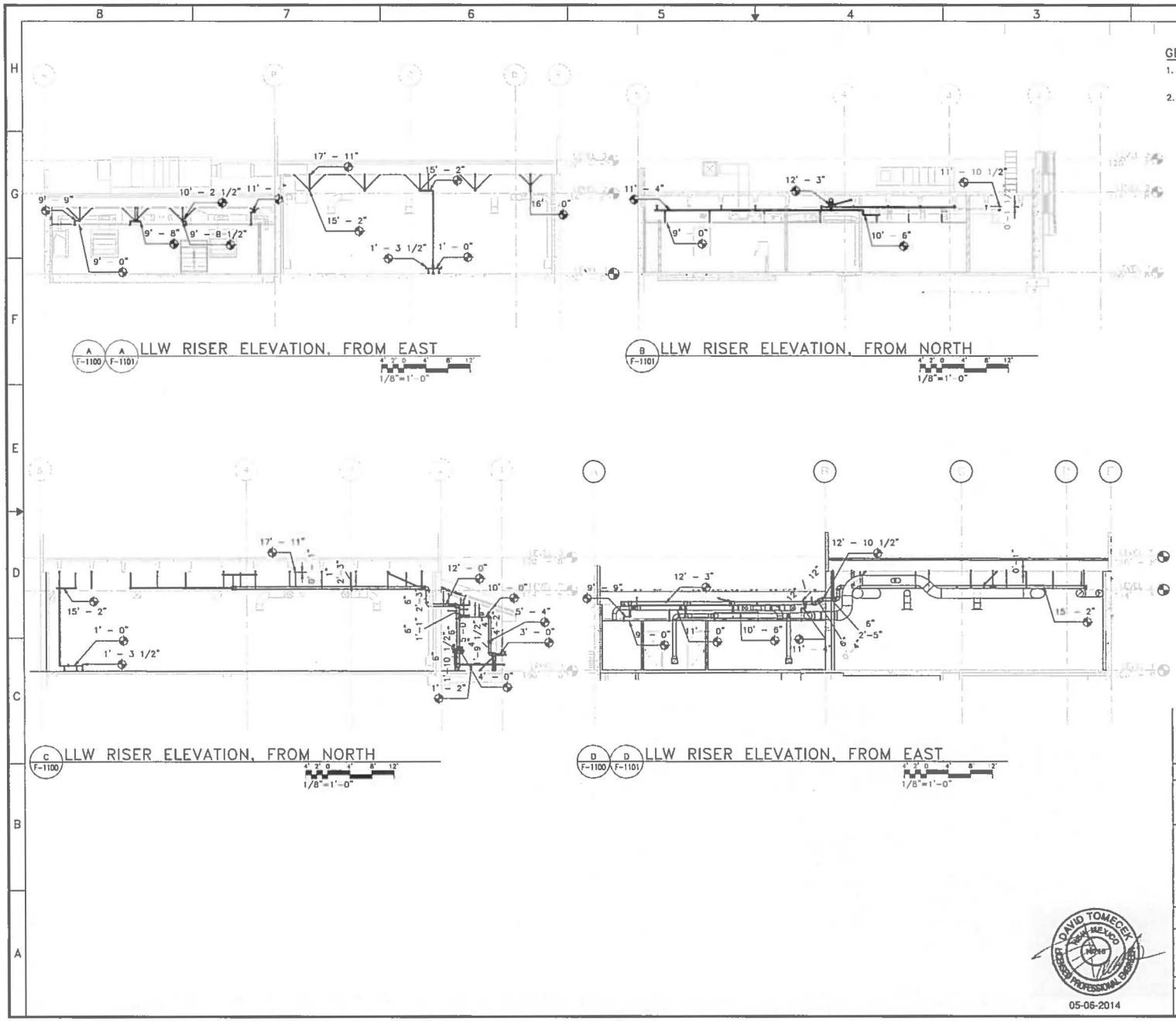

GENERAL NOTES:

1. IF THIS SHEET IS NOT 24"x 36", THEN IT IS A REDUCED SIZE PLOT. USE GRAPHIC SCALE ACCORDINGLY.
2. FIRE PROTECTION PIPING & SPRINKLER INSTALLATION SHALL BE PER NFPA 13-2007, FOR ORDINARY HAZARD GROUP 2.

DAVID TOMECEK NEW MEXICO 14218 LICENSED PROFESSIONAL ENGINEER
05-06-2014

NO	DATE	CLASS REV	ADC	DESCRIPTION	DWN	DES	CHKD	SUB	APP

AECOM

RLWTF-UP LOW LEVEL WASTE SUBPROJECT

FIRE PROTECTION SECTION VIEWS

BLDG. 230 TA-50

DRAWN	C AZHOE
DESIGN	M FERRARESI
CHECKED	B SMEATON
DATE	5/8/14

SUBMITTED MANUEL TARIN

APPROVED FOR RELEASE ED ARTIOLA

Los Alamos NATIONAL LABORATORY PO Box 1663 Los Alamos, New Mexico 87545

SHEET F-3101

148 OF 434

CLASSIFICATION REVIEWER DATE

PROJECT ID 100761 DRAWING NO C55864 REV 0

66727

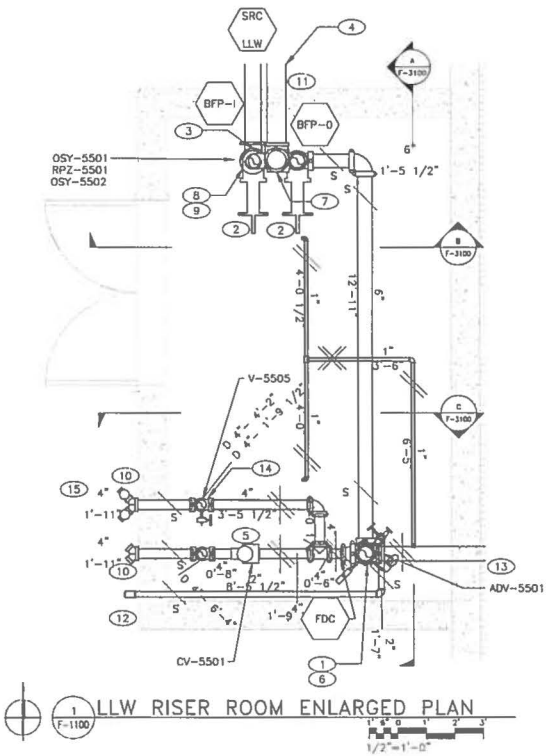

1 F-1100 LLW RISER ROOM ENLARGED PLAN

1/2"=1'-0"

GENERAL NOTES:

1. IF THIS SHEET IS NOT 24"x 36", THEN IT IS A REDUCED SIZE PLOT. USE GRAPHIC SCALE ACCORDINGLY.
2. FIRE PROTECTION PIPING & SPRINKLER INSTALLATION SHALL BE PER NFPA 13-2007, FOR ORDINARY HAZARD GROUP 2.

KEYED NOTES:

1. ALARM CHECK VALVE WITH COMPLETE UL-LISTED TRIM, PER SPECIFICATION
2. TAMPER SWITCH
3. 6" REDUCED-PRESSURE BACKFLOW PREVENTION ASSEMBLY
4. 8" DRAIN FOR BFP (ONE SIZE LARGER THAN BFP) WITH 45° ELBOW TURN DOWN.
5. PROVIDE PIPING FROM BALL DRIP DISCHARGE THROUGH EXTERIOR WALL AND TERMINATE AT FDC CONNECTION.
6. PROVIDE MINIMUM CLEARANCES FROM PERMANENT OBSTRUCTIONS FOR UNIT TESTING AND REPAIR (PER MANUFACTURER'S REQUIREMENTS).
7. AIR GAP KIT. DRAIN PIPE SIZE MINIMUM ONE PIPE SIZE LARGER THAN BACKFLOW PREVENTER. ROUTE DRAIN PIPE TO DAYLIGHT & COVER EXPOSED END WITH 1/4" HARDWARE CLOTH.
8. PROVIDE FLEXIBLE COUPLING WITHIN 24" OF FINISHED FLOOR.
9. FLOOR PENETRATION.
10. 8" WALL PENETRATION AT 3'-6" AFF.
11. 12" WALL PENETRATION AT 0'-11" AFF.
12. 4" WALL PENETRATION AT 0'-11" AFF
13. 10" WALL PENETRATION AT 12'-0" AFF.
14. SUPERVISED, NORMALLY CLOSED, INDICATING BUTTERFLY VALVE.
15. PROVIDE TEST HEADER ON OUTSIDE WALL FOR FORWARD FLOW TESTS OF BACKFLOW PREVENTION ASSEMBLY. SEE SPECIFICATION FOR DETAILS.

DAVID TOMECEK NEW MEXICO 14216 LICENSED PROFESSIONAL ENGINEER

05-06-2014

NO	DATE	CLASS REV	ADC	DESCRIPTION	DWN	DES	CHKD	SUB	APP

AECOM

RLWTF-UP LOW LEVEL WASTE SUBPROJECT

FIRE PROTECTION
ENLARGED PLAN VIEW – FIRE RISER ROOM

BLDG. 230 TA-50

DRAWN	C AZHOE
DESIGN	M FERNANDES
CHECKED	B SMEATON
DATE	5/8/14

SUBMITTED: MANUEL TARIN
APPROVED FOR RELEASE: ED ARTIGLIA

Los Alamos NATIONAL LABORATORY
PO Box 1663 Los Alamos, New Mexico 87545

SHEET F-4100
149 OF 434

CLASSIFICATION | REVIEWER | DATE

PROJECT ID	DRAWING NO	REV
100761	C55864	0

12200

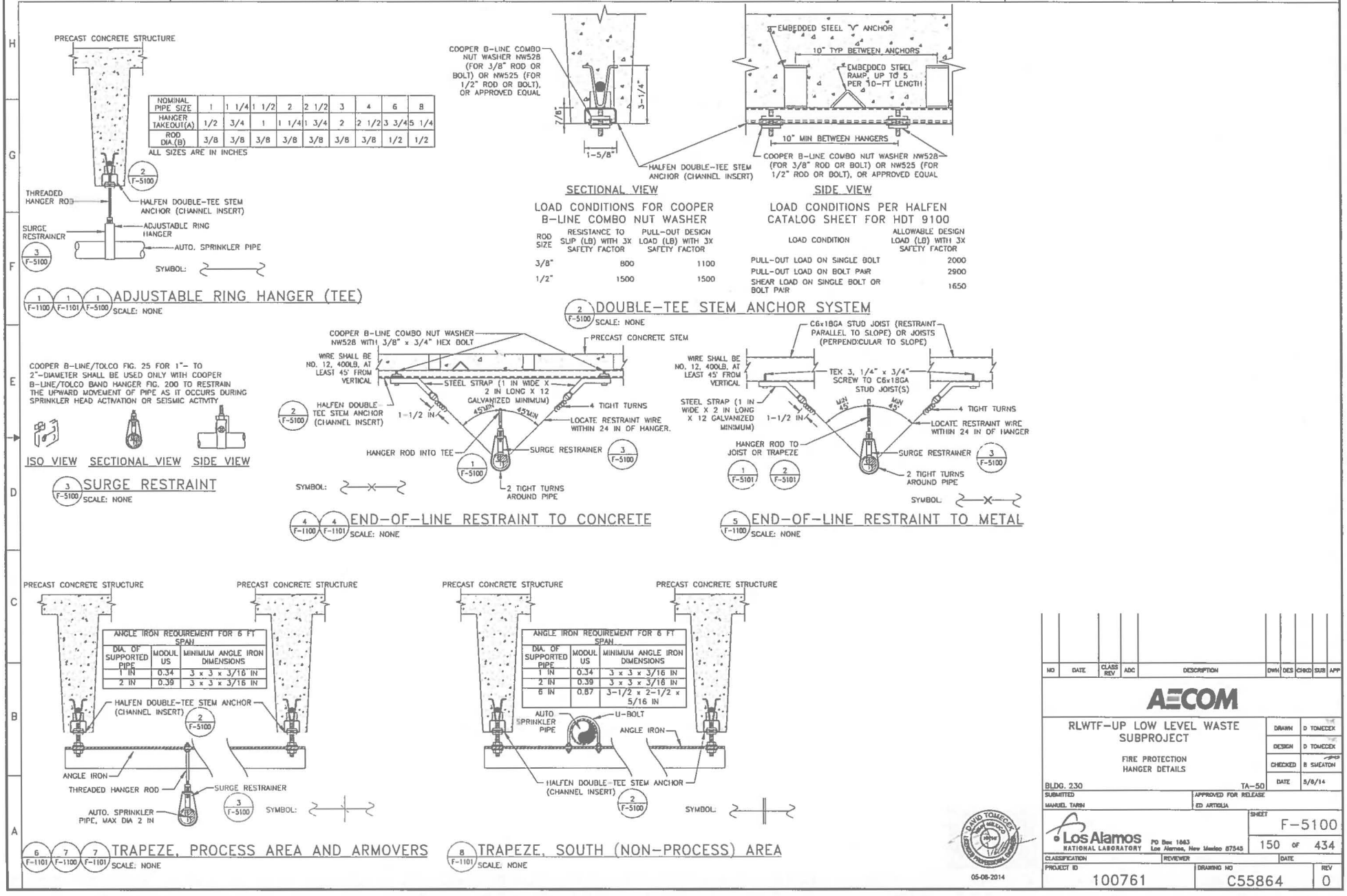
PRECAST CONCRETE STRUCTURE
NOMINAL PIPE SIZE | 1 | 1 1/4 | 1 1/2 | 2 | 2 1/2 | 3 | 4 | 6 | 8
HANGER TAKEOUT(A) | 1/2 | 3/4 | 1 | 1 1/4 | 1 3/4 | 2 | 2 1/2 | 3 3/4 | 5 1/4
ROD DIA.(B) | 3/8 | 3/8 | 3/8 | 3/8 | 3/8 | 3/8 | 3/8 | 1/2 | 1/2
ALL SIZES ARE IN INCHES
2 F-5100
THREADED HANGER ROD
HALFEN DOUBLE-TEE STEM ANCHOR (CHANNEL INSERT)
SURGE RESTRAINER
ADJUSTABLE RING HANGER
AUTO. SPRINKLER PIPE
3 F-5100
SYMBOL:
1 F-1100 1 F-1101 1 F-5100 ADJUSTABLE RING HANGER (TEE)
SCALE: NONE
COOPER B-LINE COMBO NUT WASHER NW528 (FOR 3/8" ROD OR BOLT) OR NW525 (FOR 1/2" ROD OR BOLT), OR APPROVED EQUAL
7/8"
3-1/4"
1-5/8"
HALFEN DOUBLE-TEE STEM ANCHOR (CHANNEL INSERT)
EMBEDDED STEEL "Y" ANCHOR
10" TYP BETWEEN ANCHORS
EMBEDDED STEEL RAMP, UP TO 5 PER 10-FT LENGTH
10" MIN BETWEEN HANGERS
COOPER B-LINE COMBO NUT WASHER NW528 (FOR 3/8" ROD OR BOLT) OR NW525 (FOR 1/2" ROD OR BOLT), OR APPROVED EQUAL
SECTIONAL VIEW
SIDE VIEW
LOAD CONDITIONS FOR COOPER B-LINE COMBO NUT WASHER
ROD SIZE | RESISTANCE TO SLIP (LB) WITH 3X SAFETY FACTOR | PULL-OUT DESIGN LOAD (LB) WITH 3X SAFETY FACTOR
3/8" | 800 | 1100
1/2" | 1500 | 1500
LOAD CONDITIONS PER HALFEN CATALOG SHEET FOR HDT 9100
LOAD CONDITION | ALLOWABLE DESIGN LOAD (LB) WITH 3X SAFETY FACTOR
PULL-OUT LOAD ON SINGLE BOLT | 2000
PULL-OUT LOAD ON BOLT PAIR | 2900
SHEAR LOAD ON SINGLE BOLT OR BOLT PAIR | 1650
2 F-5100 DOUBLE-TEE STEM ANCHOR SYSTEM
SCALE: NONE
COOPER B-LINE/TOLCO FIG. 25 FOR 1"- TO 2"-DIAMETER SHALL BE USED ONLY WITH COOPER B-LINE/TOLCO BAND HANGER FIG. 200 TO RESTRAIN THE UPWARD MOVEMENT OF PIPE AS IT OCCURS DURING SPRINKLER HEAD ACTIVATION OR SEISMIC ACTIVITY
ISO VIEW
SECTIONAL VIEW
SIDE VIEW
3 F-5100 SURGE RESTRAINT
SCALE: NONE
COOPER B-LINE COMBO NUT WASHER NW528 WITH 3/8" x 3/4" HEX BOLT
PRECAST CONCRETE STEM
WIRE SHALL BE NO. 12, 400LB. AT LEAST 45° FROM VERTICAL
STEEL STRAP (1 IN WIDE X 2 IN LONG X 12 GALVANIZED MINIMUM)
2 F-5100 HALFEN DOUBLE TEE STEM ANCHOR (CHANNEL INSERT)
1-1/2 IN
45° MIN
4 TIGHT TURNS
LOCATE RESTRAINT WIRE WITHIN 24 IN OF HANGER.
HANGER ROD INTO TEE
1 F-5100
SURGE RESTRAINER
3 F-5100
2 TIGHT TURNS AROUND PIPE
SYMBOL:
4 F-1100 4 F-1101 END-OF-LINE RESTRAINT TO CONCRETE
SCALE: NONE
C6x18GA STUD JOIST (RESTRAINT PARALLEL TO SLOPE) OR JOISTS (PERPENDICULAR TO SLOPE)
WIRE SHALL BE NO. 12, 400LB. AT LEAST 45° FROM VERTICAL
TEK 3, 1/4" x 3/4" SCREW TO C6x18GA STUD JOIST(S)
STEEL STRAP (1 IN WIDE X 2 IN LONG X 12 GALVANIZED MINIMUM)
1-1/2 IN
MIN 45°
4 TIGHT TURNS
LOCATE RESTRAINT WIRE WITHIN 24 IN OF HANGER
HANGER ROD TO JOIST OR TRAPEZE
1 F-5101
2 F-5101
SURGE RESTRAINER
3 F-5100
2 TIGHT TURNS AROUND PIPE
SYMBOL:
5 F-1100 END-OF-LINE RESTRAINT TO METAL
SCALE: NONE
PRECAST CONCRETE STRUCTURE
PRECAST CONCRETE STRUCTURE
ANGLE IRON REQUIREMENT FOR 6 FT SPAN
DIA. OF SUPPORTED PIPE | MODULUS | MINIMUM ANGLE IRON DIMENSIONS
1 IN | 0.34 | 3 x 3 x 3/16 IN
2 IN | 0.39 | 3 x 3 x 3/16 IN
HALFEN DOUBLE-TEE STEM ANCHOR (CHANNEL INSERT)
2 F-5100
ANGLE IRON
THREADED HANGER ROD
SURGE RESTRAINER
AUTO. SPRINKLER PIPE, MAX DIA 2 IN
3 F-5100
SYMBOL:
6 F-1101 7 F-1100 7 F-1101 TRAPEZE, PROCESS AREA AND ARMOVERS
SCALE: NONE
PRECAST CONCRETE STRUCTURE
PRECAST CONCRETE STRUCTURE
ANGLE IRON REQUIREMENT FOR 6 FT SPAN
DIA. OF SUPPORTED PIPE | MODULUS | MINIMUM ANGLE IRON DIMENSIONS
1 IN | 0.34 | 3 x 3 x 3/16 IN
2 IN | 0.39 | 3 x 3 x 3/16 IN
6 IN | 0.87 | 3-1/2 x 2-1/2 x 5/16 IN
AUTO SPRINKLER PIPE
U-BOLT
ANGLE IRON
HALFEN DOUBLE-TEE STEM ANCHOR (CHANNEL INSERT)
2 F-5100
SYMBOL:
8 F-1101 TRAPEZE, SOUTH (NON-PROCESS) AREA
SCALE: NONE
DAVID TOMECEK
05-08-2014
NO | DATE | CLASS REV | ADC | DESCRIPTION | DWN | DES | CHKD | SUB | APP
AECOM
RLWTF-UP LOW LEVEL WASTE SUBPROJECT
FIRE PROTECTION HANGER DETAILS
DRAWN D TOMECEK
DESIGN D TOMECEK
CHECKED B SWEATON
DATE 5/9/14
BLDG. 230
TA-50
SUBMITTED MANUEL TARIN
APPROVED FOR RELEASE ED ARTIGLIA
Los Alamos NATIONAL LABORATORY PO Box 1663 Los Alamos, New Mexico 87545
SHEET F-5100
150 OF 434
CLASSIFICATION
REVIEWER
DATE
PROJECT ID 100761
DRAWING NO C55864
REV 0

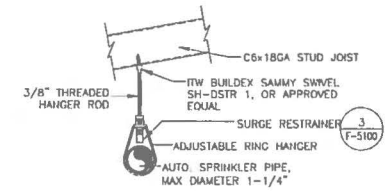

1 F-1100 / 1 F-5100 SPRINKLER HANGER TO JOIST
SCALE: NONE

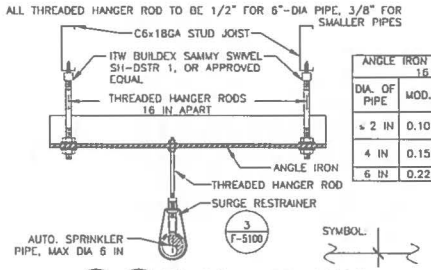

ANGLE IRON REQUIREMENT FOR 16 IN SPAN		
DIA. OF PIPE	MOD.	MINIMUM ANGLE IRON DIMENSIONS
≤ 2 IN	0.10	1-1/2 X 1-1/2 X 3/16 IN
4 IN	0.15	2 X 1-1/2 X 3/16 IN
6 IN	0.22	2 X 2 X 1/4 IN

2 F-1100 / 2 F-5100 TRAPEZE TO JOIST
SCALE: NONE

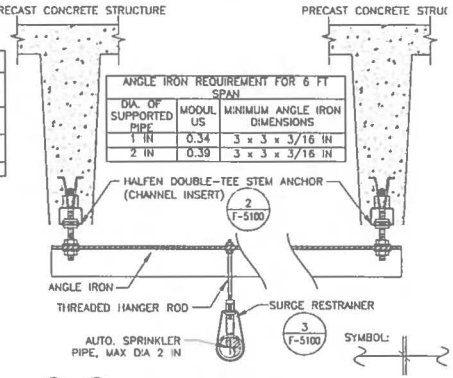

3 F-1100 / 3 F-1101 TRAPEZE FOR ARMOVERS
SCALE: NONE

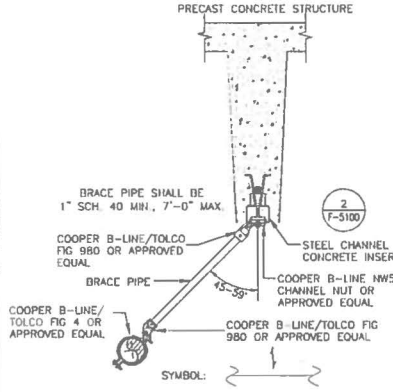

4 F-1100 LATERAL SWAY BRACE
SCALE: NONE

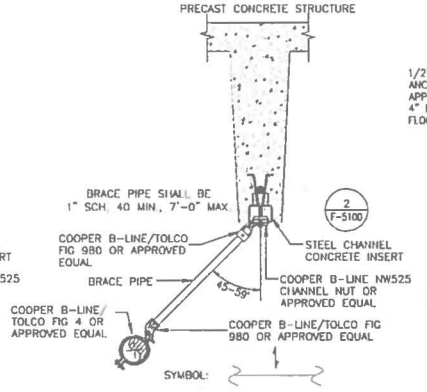

5 F-1100 LONGITUDINAL SWAY BRACE
SCALE: NONE

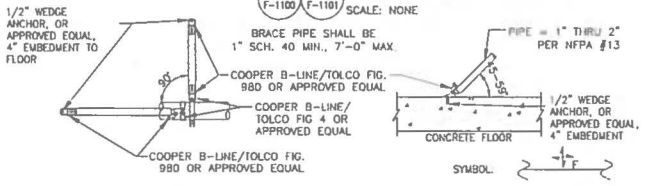

6 F-1100 4-WAY SWAY BRACE TO CONCRETE FLOOR
SCALE: NONE

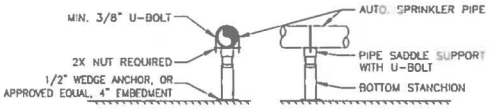

7 F-1100 / 7 F-5100 PIPE STAND
SCALE: NONE

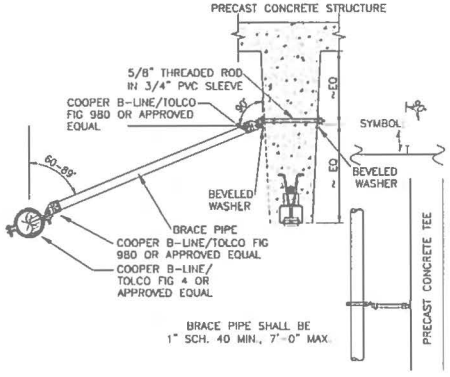

8 F-1101 LATERAL SWAY BRACE TO TEE
SCALE: NONE

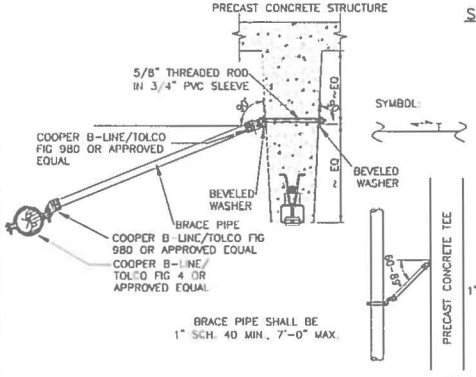

9 F-1101 LONGITUDINAL SWAY BRACE TO TEE
SCALE: NONE

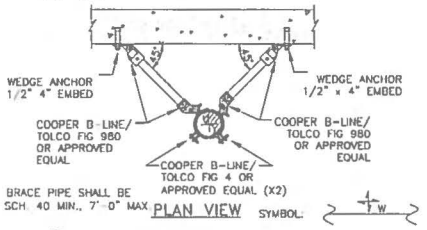

10 F-1100 4-WAY BRACE TO WALL
SCALE: NONE

05-06-2014

NO	DATE	CLASS REV	ADC	DESCRIPTION	DWN	DES	CHKD	SUB	APP

AECOM

RLWTF-UP LOW LEVEL WASTE SUBPROJECT

FIRE PROTECTION
HANGER AND SUPPORT DETAILS

BLDG. 230 TA-50

DRAWN	D TOMECEK
DESIGN	D TOMECEK
CHECKED	B SWEATON
DATE	5/6/14

SUBMITTED: MANUEL TARIN
APPROVED FOR RELEASE: ED ARTIGLIA

Los Alamos NATIONAL LABORATORY
PO Box 1663 Los Alamos, New Mexico 87545

SHEET F-5101
151 OF 434

CLASSIFICATION | REVIEWER | DATE

PROJECT ID	DRAWING NO	REV
100761	C55864	0

12021

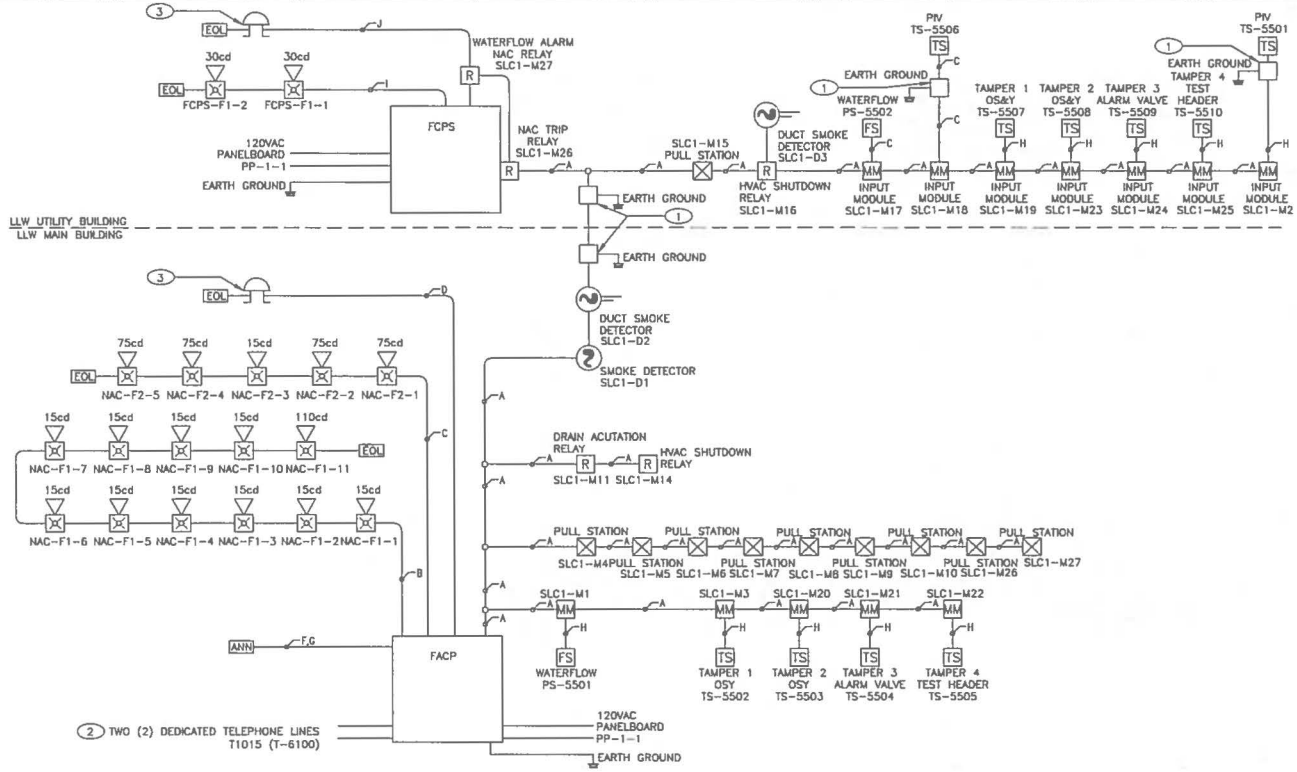

FIRE ALARM RISER DIAGRAM

GENERAL NOTES

1. CONDUIT ROUTING IS SHOWN FOR INFORMATIONAL PURPOSES ONLY.

KEYED NOTES

(1) PROVIDE SURGE SUPPRESSION FOR CIRCUITS EXITING THE BUILDING

(2) INSTALL TELECOMMUNICATIONS CABLES, SEE SHEET T-1100

(3) WATERFLOW ALARM BELL FOR SPRINKLER SYSTEM ACTIVATION

CIRCUIT DESCRIPTION

A. SIGNALING LINE CIRCUIT 1 – 16awg FPL
B. NOTIFICATION APPLIANCE CIRCUIT 1 – 14awg TFN
C. NOTIFICATION APPLIANCE CIRCUIT 2 – 14awg TFN
D. NOTIFICATION APPLIANCE CIRCUIT 3 – 14awg TFN
E. NOT USED
F. RS-485 COMMUNICATION CIRCUIT – 24awg STP CABLE
G. 24VDC POWER CIRCUIT – 14awg TFN
H. INITIATING DEVICE CIRCUIT – 14awg TFN
I. FCPS NOTIFICATION APPLIANCE CIRCUIT 1 – 14awg TFN
J. FCPS NOTIFICATION APPLIANCE CIRCUIT 2 – 14awg TFN

NO	DATE	CLASS REV	ADC	DESCRIPTION	DWN	DES	CHKD	SUB	APP

AECOM

RLWTF-UP LOW LEVEL WASTE SUBPROJECT

FIRE ALARM RISER DIAGRAM

BLDG. 230 TA-50

DRAWN	C AZMOE
DESIGN	C AZMOE
CHECKED	B SMEATON
DATE	5/8/14

SUBMITTED: MANUEL TARIN

APPROVED FOR RELEASE: ED ARTIOLA

Los Alamos NATIONAL LABORATORY — PO Box 1663, Los Alamos, New Mexico 87545

SHEET F-6100

152 OF 434

CLASSIFICATION | REVIEWER | DATE

PROJECT ID 100761 | DRAWING NO C55864 | REV 0

DAVID TOMECEK — NEW MEXICO — 10746 — LICENSED PROFESSIONAL ENGINEER

05-06-2014

12223

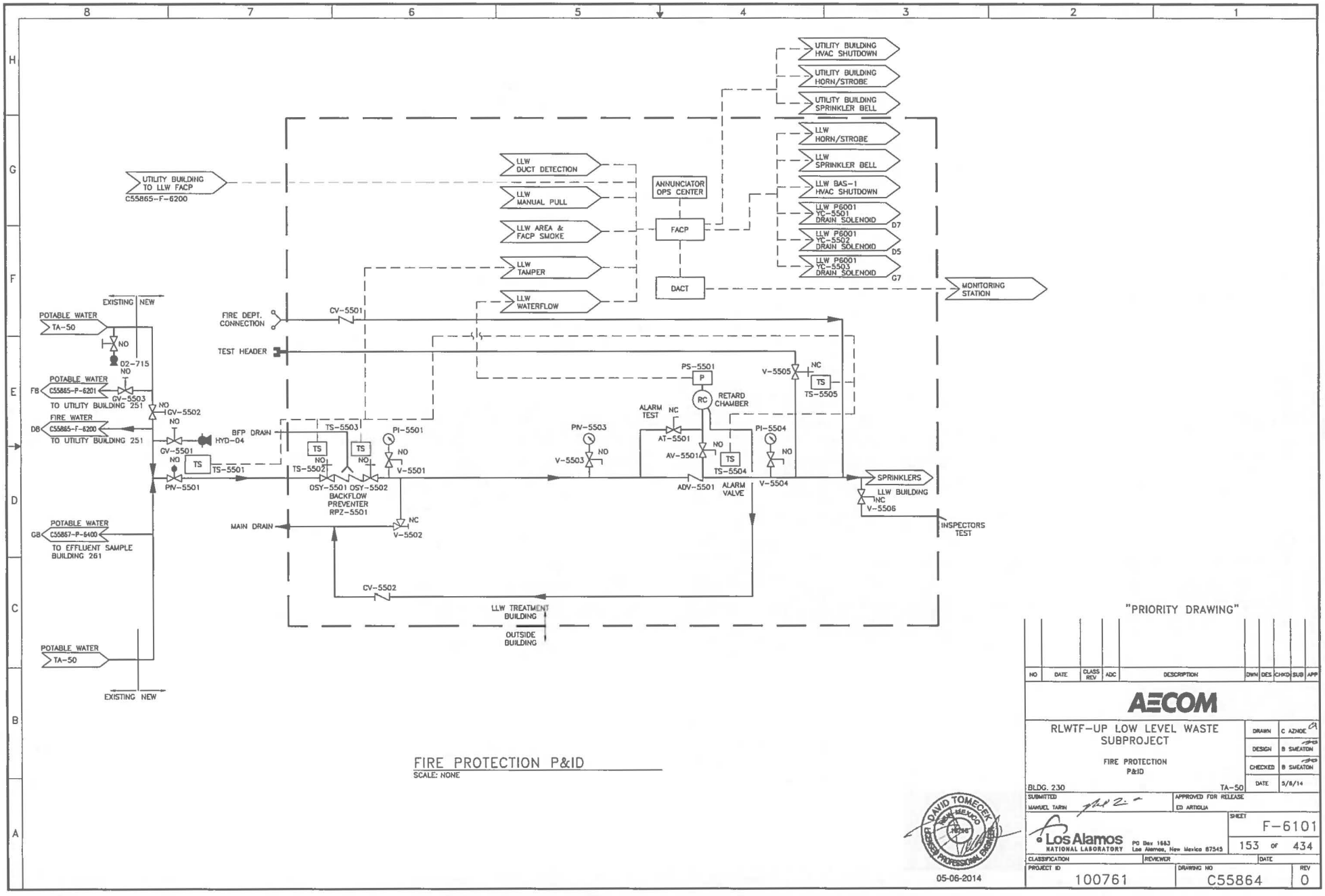

FIRE PROTECTION P&ID
SCALE: NONE

"PRIORITY DRAWING"

NO	DATE	CLASS REV	ADC	DESCRIPTION	DWN	DES	CHKD	SUB	APP

AECOM

RLWTF-UP LOW LEVEL WASTE SUBPROJECT

FIRE PROTECTION P&ID

DRAWN: C AZNOE
DESIGN: B SWEATON
CHECKED: B SWEATON
DATE: 5/8/14

BLDG. 230 TA-50

SUBMITTED: MANUEL TARIN
APPROVED FOR RELEASE: ED ARTIGLIA

Los Alamos NATIONAL LABORATORY PO Box 1663 Los Alamos, New Mexico 87545

SHEET: F-6101
153 OF 434

CLASSIFICATION | REVIEWER | DATE

PROJECT ID: 100761
DRAWING NO: C55864
REV: 0

DAVID TOMECEK NEW MEXICO 21646 LICENSED PROFESSIONAL ENGINEER
05-06-2014

12201

SPRINKLER SCHEDULE

TYPE	TEMPERATURE	K-FACTOR	RESPONSE	COVERAGE	COUNT
EXPOSED SSU	ORDINARY (EST. 155°F)	5.6 GPM/PSI$^{1/2}$	STANDARD	STANDARD	45
SEMI-RECESSED PENDENT	ORDINARY (EST. 155°F)	5.6 GPM/PSI$^{1/2}$	STANDARD	STANDARD	32
SIDEWALL	ORDINARY (EST. 155°F)	5.6 GPM/PSI$^{1/2}$	STANDARD	STANDARD	1

HANGER SCHEDULE

MAXIMUM DISTANCE BETWEEN HANGERS											
NOMINAL PIPE SIZE (in.)	1"	1-1/4"	1-1/2"	2"	2-1/2"	3"	3-1/2"	4"	5"	6"	8"
STEEL PIPE SCHEDULE 10 THREADED	12'-0"	12'-0"	12'-0"	12'-0"	12'-0"	12'-0"	N/A	N/A	N/A	N/A	N/A
STEEL PIPE SCHEDULE 10 GROOVED	12'-0"	12'-0"	15'-0"	15'-0"	15'-0"	15'-0"	15'-0"	15'-0"	15'-0"	15'-0"	15'-0"
STEEL PIPE SCHEDULE 40	12'-0"	12'-0"	15'-0"	15'-0"	15'-0"	15'-0"	15'-0"	15'-0"	15'-0"	15'-0"	15'-0"

DAVID TOMECEK NEW MEXICO 16945 LICENSED PROFESSIONAL ENGINEER

05-06-2014

NO	DATE	CLASS REV	ADC	DESCRIPTION	DWN	DES	CHKD	SUB	APP

AECOM

RLWTF-UP LOW LEVEL WASTE SUBPROJECT

FIRE PROTECTION SCHEDULES

DRAWN	C AZNOE
DESIGN	M FERRARESI
CHECKED	B SWEATON
DATE	5/8/14

BLDG. 230 TA-50

SUBMITTED MANUEL TARIN

APPROVED FOR RELEASE ED ARTIGLIA

Los Alamos NATIONAL LABORATORY PO Box 1663 Los Alamos, New Mexico 87545

SHEET F-7100

154 OF 434

CLASSIFICATION REVIEWER DATE

PROJECT ID 100761

DRAWING NO C55864

REV 0

12295

SYSTEM OUTPUTS

		FACP ANNUNCIATION												NOTIFICATION		CONTROL SIGNALS		
	SYSTEM INPUTS	A: ACTUATE COMMON ALARM SIGNAL INDICATOR	B: ACTUATE AUDIBLE ALARM SIGNAL	C: ACTUATE COMMON SUPERVISORY SIGNAL INDICATOR	D: ACTUATE AUDIBLE SUPERVISORY SIGNAL	E: ACTUATE COMMON TROUBLE SIGNAL INDICATOR	F: ACTUATE AUDIBLE COMMON TROUBLE SIGNAL	G: DISPLAY CHANGE OF STATUS ON FACP SCREEN	H: LLW ACTUATE EVACUATION SIGNALS	I: UTILITY BUILDING ACTIVATE EVACUATION SIGNALS	J: TRANSMIT FIRE ALARM SIGNAL TO LANL MONITORING	K: TRANSMIT SUPR/TRBL SIGNAL TO LANL MONITORING	L: LLW HVAC SHUTDOWN	M: UTILITY BUILDING HVAC SHUTDOWN	N: ACTIVATE DRAIN ACTUATION SOLENOIDS	O	P
1	LLW MANUAL FIRE ALARM STATION	●	●					●	●		●							
2	LLW SMOKE DETECTOR (FACP)	●	●					●	●		●							
3	LLW WATER PRESSURE SWITCH	●	●					●	●		●				●			
4	UTILITY BUILDING MANUAL FIRE ALARM STATION	●	●					●		●								
5	UTILITY BUILDING WATER PRESSURE SWITCH	●	●					●		●								
6	LLW DUCT SMOKE DETECTOR			●	●			●				●	●					
7	UTILITY BUILDING DUCT SMOKE DETECTOR			●	●			●				●		●				
8	SPRINKLER CONTROL VALVE TAMPER			●	●			●				●						
9	FIRE ALARM AC POWER FAILURE			●	●			●				●						
10	FIRE ALARM SYSTEM LOW BATTERY					●	●	●				●						
11	OPEN CIRCUIT					●	●	●				●						
12	GROUND FAULT					●	●	●				●						
13	NOTIFICATION APPLIANCE CIRCUIT SHORT					●	●	●				●						
14																		
15																		

FIRE ALARM SYSTEM INPUT/OUTPUT MATRIX

DAVID TOMECEK NEW MEXICO 16216 LICENSED PROFESSIONAL ENGINEER

05-06-2014

NO	DATE	CLASS REV	ADC	DESCRIPTION	DWN	DES	CHKD	SUB	APP

AECOM

RLWTF-UP LOW LEVEL WASTE SUBPROJECT

FIRE ALARM INPUT/OUTPUT MATRIX

BLDG. 230 TA-50

DRAWN	C AZHOE		
DESIGN	C AZHOE		
CHECKED	B SMEATON		
DATE	5/8/14		

SUBMITTED MANUEL TARIN

APPROVED FOR RELEASE ED ARTIGLIA

Los Alamos NATIONAL LABORATORY PO Box 1663 Los Alamos, New Mexico 87545

SHEET F-7101

155 OF 434

CLASSIFICATION REVIEWER DATE

PROJECT ID 100761

DRAWING NO C55864

REV 0

12206

Required Standby Hours =	24	BUILDING:	RLWTF
Required Alarm Hours =	0.167 (10 minutes	RPS #:	1

Enter data in fields color-coded blue.

Qty	Description	Notes	Standby Current (Is) (amps) Each	Standby Current (Is) (amps) Total	Alarm Current (Ia) (amps) Each	Alarm Current (Ia) (amps) Total
	REMOTE POWER SUPPLY					
1	FCPS-24S8		0.065	0.065	0.145	0.145
			0.000		0.000	
			0.000		0.000	
			0.000		0.000	
			Is =	0.065	Ia =	0.145
		1			Is + Ia =	0.210
	NOTIFICATION APPLIANCE CIRCUITS					
	FCPS-F1					0.25
	FCPS-F2					0.04
					Ia =	0.29
	Total Current Required	2, 3	Is =	0.07	Ia =	0.44
	Standby Hours		x	24	x	0.167
	Standby/Alarm Ah requirements			7		0.07
	Ampere-hour (Ah) Sub-Total				Ah	1.63
	Derate by 20%				x 1.20	1.96
	Minimum Ah Battery Size Required	4, 5			Battery Ah =	2
					Installed Battery Ah	7
	NOTES		Max. hours available on battery (Is only) without A			108

1 Base panel current must be less than 1.32 A
2 Only 10% of initiation device alarm current is used in calculation
3 If the Total Current Required value exceeds 6 A, switch part of the load to an auxiliary power source
4 If the calculated battery size exceeds 40 Ah, switch part of the load to an auxiliary power source
5 For batteries rated greater than 25 Ah, place the batteries in a NFS-LBB Battery Cabinet

REMOTE POWER SUPPLY BATTERY CALCULATION

Maximum NAC Amps Capacity:	2.0	(typ. 2 amps)	BUILDING:	RLWTF
System Source Voltage (vdc):	20.4	(typ. 24 vdc)	FACP TRANSMITTER #:	
Min. Appliance Voltage (vdc):	16	(typ. 20 vdc)		
NAC Wire Gauge:	14	Note: Wire resistance is based on the 2002 NEC		
Resistance per 1000 Feet:	3.19	Chapter 9, Table 8 coated as resistance for #14 solid		

NOTIFICATION APPLIANCE (NAC) CIRCUIT #: NAC-F1

From Source (FACP, NAC Power Supply):					Output		
Device Within (ft)	Device Type (Code)	Device ID/Label	Device Current (amps)	from previous device/source	Voltage at Device	Voltage Drop from Source	Percent Voltage Drop
1	75-/S		0.088	2	20.21	0.19	0.96%
2	75-/S		0.088	75	19.52	0.88	4.32%
3	75-/S		0.088	20	19.70	0.70	3.45%
4	75-/S		0.088	44	19.45	0.95	4.67%
5	75-/S		0.088	15	19.77	0.63	3.09%
6	75-/S		0.088	18	19.29	1.11	5.46%
7	75-/S		0.088	20	19.21	1.19	5.85%
8	75-/S		0.045	14	19.76	0.64	3.16%
9	75-/S		0.088	14	19.12	1.28	6.29%
10	[illegible]		0.088	18	19.08	1.32	6.49%
11	[illegible]		0.088	0	19.22	1.18	5.80%
					19.22	1.18	5.80%
					19.22	1.18	5.80%
					19.22	1.18	5.80%
					19.22	1.18	5.80%
					19.22	1.18	5.80%
					19.22	1.18	5.80%
					19.22	1.18	5.80%
					19.22	1.18	5.80%
Total NAC Amp Load:			1.147		19.04	1.36	6.67%
Voltage drop is within device limits				274	(One-way wire length)		
NAC amps is within rated circuit capacity				548	(Entire circuit wire length)		

NOTIFICATION APPLIANCE (NAC) CIRCUIT #: NAC-F2

From Source (FACP, NAC Power Supply):					Output		
Device Within (ft)	Device Type (Code)	Device ID/Label	Device Current (amps)	from previous device/source	Voltage at Device	Voltage Drop from Source	Percent Voltage Drop
1	75-/S		0.088	36	20.20	0.20	0.98%
2	75-/S		0.088	36	20.02	0.38	1.86%
3	75-/S		0.088	26	19.95	0.45	2.21%
4	75-/S		0.088	108	19.88	0.52	2.54%
5	75-/S		0.088	33	19.83	0.57	2.80%
					19.83	0.57	2.80%
					19.83	0.57	2.80%
					19.83	0.57	2.80%
					19.83	0.57	2.80%
					19.83	0.57	2.80%
					19.83	0.57	2.80%
					19.83	0.57	2.80%
					19.83	0.57	2.80%
					19.83	0.57	2.80%
					19.83	0.57	2.80%
					19.83	0.57	2.80%
					19.83	0.57	2.80%
					19.83	0.57	2.80%
Total NAC Amp Load:			0.898		19.83	0.77	3.75%
Voltage drop is within device limits				241	(One-way wire length)		
NAC amps is within rated circuit capacity				482	(Entire circuit wire length)		

NAC-F1/NAC-F2 VOLTAGE DROP CALCULATION

Required Standby Hours =	24	BUILDING:	RLWTF
Required Alarm Hours =	0.167 (10 minutes	RPS #:	2

Enter data in fields color-coded blue.

Qty	Description	Notes	Standby Current (Is) (amps) Each	Standby Current (Is) (amps) Total	Alarm Current (Ia) (amps) Each	Alarm Current (Ia) (amps) Total
	REMOTE POWER SUPPLY					
1	FCPS-24S8		0.065	0.065	0.145	0.145
			0.000		0.000	
			0.000		0.000	
			0.000		0.000	
			Is =	0.065	Ia =	0.145
		1			Is + Ia =	0.210
	NOTIFICATION APPLIANCE CIRCUITS					
	FCPS-F1					0.25
	FCPS-F2					0.04
					Ia =	0.29
	Total Current Required	2, 3	Is =	0.07	Ia =	0.44
	Standby Hours		x	24	x	0.167
	Standby/Alarm Ah requirements			7		0.07
	Ampere-hour (Ah) Sub-Total				Ah	1.63
	Derate by 20%				x 1.20	1.96
	Minimum Ah Battery Size Required	4, 5			Battery Ah =	2
					Installed Battery Ah	7
	NOTES		Max. hours available on battery (Is only) without A			108

1 Base panel current must be less than 1.32 A
2 Only 10% of initiation device alarm current is used in calculation
3 If the Total Current Required value exceeds 6 A, switch part of the load to an auxiliary power source
4 If the calculated battery size exceeds 40 Ah, switch part of the load to an auxiliary power source
5 For batteries rated greater than 25 Ah, place the batteries in a NFS-LBB Battery Cabinet

FIRE ALARM BATTERY CALCULATION

Required Standby Hours =	24	BUILDING:	RLWTF
Required Alarm Hours =	0.167 (10 minutes	FACP TRANSMITTER #:	

Enter data in fields color-coded blue.

Qty	Description	Notes	Standby Current (Is) (amps) Each	Standby Current (Is) (amps) Total	Alarm Current (Ia) (amps) Each	Alarm Current (Ia) (amps) Total
	FIRE ALARM CONTROL PANEL					
1	[illegible]		[illegible]	[illegible]	[illegible]	[illegible]
	[illegible]		[illegible]		[illegible]	
3	NAC Circuits		[illegible]		[illegible]	
	[illegible] Communicator		[illegible]	[illegible]	[illegible]	[illegible]
			s	0.395	a	0.455
					s a =	0.850
	NOTIFYING DEVICES					
0	[illegible]		[illegible]	[illegible]	[illegible]	[illegible]
1	[illegible]		[illegible]	[illegible]	[illegible]	[illegible]
14	[illegible]		[illegible]	[illegible]	[illegible]	[illegible]
5	[illegible]		[illegible]	[illegible]	[illegible]	[illegible]
12	[illegible]		[illegible]	[illegible]	[illegible]	[illegible]
2	[illegible]		[illegible]	[illegible]	[illegible]	[illegible]
			s	0.008560	a	0.04700
	OUTPUT DEVICES					
	NONE				0.000000	
			Is =	0.000000	Ia =	0.000000
	MISCELLANEOUS DEVICES					
1	[illegible]		[illegible]	[illegible]	[illegible]	[illegible]
			Is =	0.100000	Ia =	0.100000
	NOTIFICATION APPLIANCE CIRCUITS					
	NAC-F1					0.25
	NAC-F2					0.04
	NAC-F3					0.04
	NAC-F4					0.04
					Ia =	2.08
	Total Current Required	2, 3	Is =	0.50	Ia =	2.53
	Standby Hours		x	24	x	0.167
	Standby Alarm Ah requirements			12		0.44
	Ampere-hour (Ah) Sub-Total				Ah =	12.52
	Derate by 20%				x 1.20	15.03
	Minimum Ah Battery Size Required	4, 5			Battery Ah =	18
					Installed Battery Ah	18
	NOTES		hours available on battery (Is only) without AC			36

1 Base panel current must be less than 1.32 A
[illegible] % of initiation device alarm current is used in calculation
[illegible] exceeds 6 A, switch part of the load to an auxiliary power source
[illegible] 40 Ah, switch part of the load to an auxiliary power source.
5 For batteries rated greater than 25 Ah, place the batteries in a NFS-LBB Battery Cabinet.

FIRE ALARM BATTERY CALCULATION

NO	DATE	CLASS REV	ADC	DESCRIPTION	DWN	DES	CHKD	SUB	APP

AECOM

RLWTF-UP LOW LEVEL WASTE SUBPROJECT

FIRE PROTECTION SCHEDULES

DRAWN	C AZNOE
DESIGN	M FERRARESI
CHECKED	B SWEATON
DATE	5/8/14

BLDG. 230 TA-50

SUBMITTED: MANUEL TARIN

APPROVED FOR RELEASE: ED ARTIOLIA

Los Alamos NATIONAL LABORATORY PO Box 1663 Los Alamos, New Mexico 87545

SHEET F-7102

156 OF 434

CLASSIFICATION | REVIEWER | DATE

PROJECT ID 100761 | DRAWING NO C55864 | REV 0

DAVID TOMECEK NEW MEXICO 16740 LICENSED PROFESSIONAL ENGINEER

05-06-2014

12207

Maximum NAC Ampere Capacity:	2.0 (typ. 2 amps)
System Source Voltage (Vdc):	20.4 (typ. 24 Vdc)
Minimum Appliance Voltage (Vdc):	16 (typ. 20 Vdc)
NAC Wire Gauge:	14
Resistance per 1000 Feet:	3.19

BUILDING: RLWTF
FACP TRANSMITTER # :

Note: Wire resistance is based on the 2002 NEC Chapter 9, Table 8 coated DC resistance for #14 solid conductors

NOTIFICATION APPLIANCE (NAC) CIRCUIT #: NAC-F3

Power Source (FACP, NAC Power Supply): Output (zone) #:

Device Wiring Seq.	Device Type (Code)	Device ID/Label	Device Current (amps)	Distance (ft) from previous device/source	Voltage at Device	Voltage Drop from Source	Percent Voltage Drop
1	BELL		0.040	30	20.39	0.01	0.04%
					20.39	0.01	0.04%
					20.39	0.01	0.04%
					20.39	0.01	0.04%
					20.39	0.01	0.04%
					20.39	0.01	0.04%
					20.39	0.01	0.04%
					20.39	0.01	0.04%
					20.39	0.01	0.04%
					20.39	0.01	0.04%
					20.39	0.01	0.04%
					20.39	0.01	0.04%
					20.39	0.01	0.04%
					20.39	0.01	0.04%
					20.39	0.01	0.04%
					20.39	0.01	0.04%
					20.39	0.01	0.04%
					20.39	0.01	0.04%
					20.39	0.01	0.04%
Total NAC Amp Load:			0.040		20.39	0.01	0.04%
Voltage drop is within device limits				30	[One-way wire length]		
NAC amps is within rated circuit capacity				60	[Entire circuit wire length]		

NOTIFICATION APPLIANCE (NAC) CIRCUIT #: NAC-F4

Power Source (FACP, NAC Power Supply): Output (zone) #:

Device Wiring Seq	Device Type (Code)	Device ID/Label	Device Current (amps)	Distance (ft) from previous device/source	Voltage at Device	Voltage Drop from Source	Percent Voltage Drop
					20.40	0.00	0.00%
					20.40	0.00	0.00%
					20.40	0.00	0.00%
					20.40	0.00	0.00%
					20.40	0.00	0.00%
					20.40	0.00	0.00%
					20.40	0.00	0.00%
					20.40	0.00	0.00%
					20.40	0.00	0.00%
					20.40	0.00	0.00%
					20.40	0.00	0.00%
					20.40	0.00	0.00%
					20.40	0.00	0.00%
					20.40	0.00	0.00%
					20.40	0.00	0.00%
					20.40	0.00	0.00%
					20.40	0.00	0.00%
					20.40	0.00	0.00%
					20.40	0.00	0.00%
Total NAC Amp Load:			0.000		20.40	0.00	0.00%
Voltage drop is within device limits				0	[One-way wire length]		
NAC amps is within rated circuit capacity				0	[Entire circuit wire length]		

NAC-F3 VOLTAGE DROP CALCULATION

Maximum NAC Ampere Capacity:	2.0 (typ. 2 amps)
System Source Voltage (Vdc):	20.4 (typ. 24 Vdc)
Minimum Appliance Voltage (Vdc):	16 (typ. 20 Vdc)
NAC Wire Gauge:	14
Resistance per 1000 Feet:	3.19

BUILDING: RLWTF
FCPS #: 1

Note: Wire resistance is based on the 2002 NEC Chapter 9, Table 8 coated DC resistance for #14 solid conductors

NOTIFICATION APPLIANCE (NAC) CIRCUIT #: FCPS-F1

Power Source (FACP, NAC Power Supply): Output (zone) #:

Device Wiring Seq.	Device Type (Code)	Device ID/Label	Device Current (amps)	Distance (ft) from previous device/source	Voltage at Device	Voltage Drop from Source	Percent Voltage Drop
1	SGH/S		0.125	15	20.38	0.02	0.12%
2	SGH/S		0.125	70	20.32	0.08	0.39%
					20.32	0.08	0.39%
					20.32	0.08	0.39%
					20.32	0.08	0.39%
					20.32	0.08	0.39%
					20.32	0.08	0.39%
					20.32	0.08	0.39%
					20.32	0.08	0.39%
					20.32	0.08	0.39%
					20.32	0.08	0.39%
					20.32	0.08	0.39%
					20.32	0.08	0.39%
					20.32	0.08	0.39%
					20.32	0.08	0.39%
					20.32	0.08	0.39%
					20.32	0.08	0.39%
					20.32	0.08	0.39%
					20.32	0.08	0.39%
Total NAC Amp Load:			0.250		20.32	0.08	0.39%
Voltage drop is within device limits				85	[One-way wire length]		
NAC amps is within rated circuit capacity				170	[Entire circuit wire length]		

NOTIFICATION APPLIANCE (NAC) CIRCUIT #: FCPS-F2

Power Source (FACP, NAC Power Supply): Output (zone) #:

Device Wiring Seq	Device Type (Code)	Device ID/Label	Device Current (amps)	Distance (ft) from previous device/source	Voltage at Device	Voltage Drop from Source	Percent Voltage Drop
1	BELL		0.040	15	20.40	0.00	0.02%
					20.40	0.00	0.02%
					20.40	0.00	0.02%
					20.40	0.00	0.02%
					20.40	0.00	0.02%
					20.40	0.00	0.02%
					20.40	0.00	0.02%
					20.40	0.00	0.02%
					20.40	0.00	0.02%
					20.40	0.00	0.02%
					20.40	0.00	0.02%
					20.40	0.00	0.02%
					20.40	0.00	0.02%
					20.40	0.00	0.02%
					20.40	0.00	0.02%
					20.40	0.00	0.02%
					20.40	0.00	0.02%
					20.40	0.00	0.02%
					20.40	0.00	0.02%
Total NAC Amp Load:			0.040		20.40	0.00	0.02%
Voltage drop is within device limits				15	[One-way wire length]		
NAC amps is within rated circuit capacity				30	[Entire circuit wire length]		

FCPS-F1/FCPS-F2 VOLTAGE DROP CALCULATION

DAVID TOMECEK NEW MEXICO 16246 PROFESSIONAL ENGINEER
05-06-2014

NO	DATE	CLASS REV	ADC	DESCRIPTION	DRN	DES	CHKD	SUB	APP

AECOM

RLWTF-UP LOW LEVEL WASTE SUBPROJECT

FIRE PROTECTION SCHEDULES

BLDG. 230 TA-50

DRAWN	C AZMOE
DESIGN	M FERRARESI
CHECKED	B SWEATON
DATE	5/8/14

SUBMITTED: MANUEL TARIN
APPROVED FOR RELEASE: ED ARTIOLIA

Los Alamos NATIONAL LABORATORY — PO Box 1663 Los Alamos, New Mexico 87545

SHEET F-7103
157 OF 434

CLASSIFICATION | REVIEWER | DATE

PROJECT ID 100761 | DRAWING NO C55864 | REV 0

12508

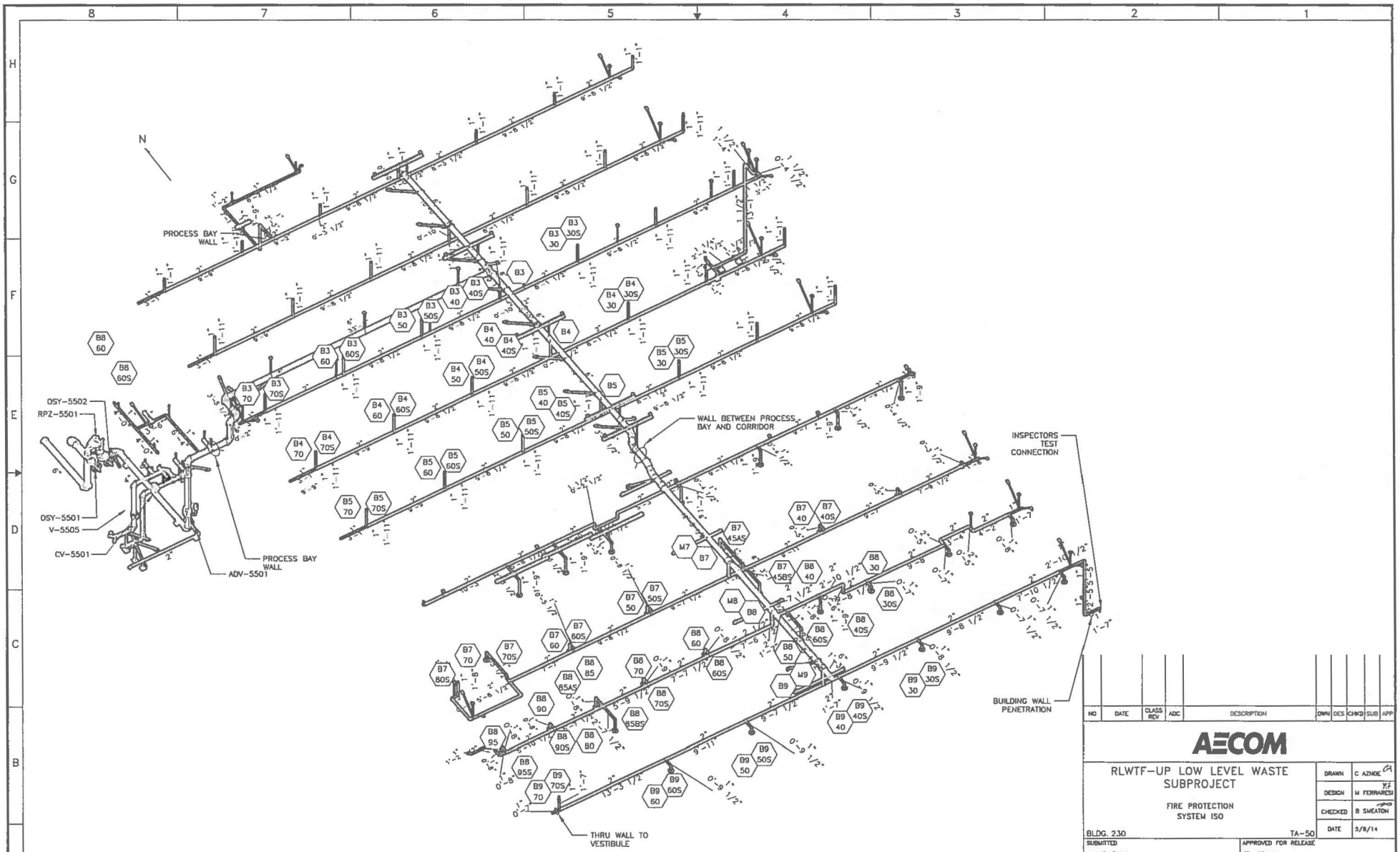

FIRE PROTECTION SYSTEM ISO
SCALE: NONE

05-06-2014

NO	DATE	CLASS REV	ADC	DESCRIPTION	DWN	DES	CHKD	SUB	APP

AECOM

RLWTF-UP LOW LEVEL WASTE SUBPROJECT

FIRE PROTECTION SYSTEM ISO

BLDG. 230 TA-50

DRAWN	C AZNOE
DESIGN	M FERRARESI
CHECKED	B SWEATON
DATE	5/8/14

SUBMITTED: MANUEL TARIN
APPROVED FOR RELEASE: ED ARTIGLIA

Los Alamos NATIONAL LABORATORY
PO Box 1663 Los Alamos, New Mexico 87545

SHEET F-9100
158 OF 434

CLASSIFICATION | REVIEWER | DATE

PROJECT ID	DRAWING NO	REV
100761	C55864	0

12209

PLUMBING SYMBOLS LEGEND

(ALL ABBREVIATIONS SHOWN ARE NOT NECESSARILY USED ON THE DRAWINGS)

(ALL SYMBOLS SHOWN ARE NOT NECESSARILY USED ON THE DRAWINGS)

ABBREVIATIONS

AC	AIR CONDITIONING	IE	INVERT ELEVATION
AD	ACCESS DOOR	IN	INCHES
AFF	ABOVE FINISHED FLOOR	IRI	INDUSTRIAL RISK INSURERS
AFG	ABOVE FINISHED GRADE		
AHU	AIR HANDLING UNIT	KW	KILOWATT
AL	ACOUSTIC LINING	KWH	KILOWATT HOUR
AOV	AIR OPERATED VALVE		
AOBV	AIR OPERATED BALL VALVE	LLW	LOW LEVEL WASTE
AR	ARGON	LO	LOCK OPEN
		LX	LABORATORY EXHAUST AIR
BDD	BACK DRAFT DAMPER		
BHP	HORSEPOWER	MA	MIXED AIR
BMCS	BUILDING MANAGEMENT CONTROL SYSTEM	MOBV	MOTOR OPERATED BALL VALVE
BOD	BOTTOM OF DUCT	NA	NOT APPLICABLE
BOP	BOTTOM OF PIPE BRAKE	NC	NORMALLY CLOSED
BP	BUILDING PRESSURE	NIC	NOT IN CONTRACT
BTUH	BTU PER HOUR	NO	NORMALLY OPEN
CAM	CONTINUOUS AIR MONITOR	OA	OUTSIDE AIR
CFH	CUBIC FEET PER HOUR	OBD	OPPOSED BLADE DAMPER
CFM	CUBIC FEET PER MINUTE	OHM	OCCUPATIONAL HEALTH MONITORING
CIE	CONTRACTOR INSTALLED EQUIPMENT		
CO	CLEANOUT	PCM	PROGRAMMABLE CONTROL MODULE; PERSONNEL CONTAMINATION MONITORING
CONT	CONTINUATION	PCV	PRESSURE CONTROL VALVE
CPVC	CHLORINATED POLYVINYL CHLORIDE	PIP	PIPE IN PIPE
		PL	PLACES
D	DRAIN	PLC	PROGRAMMABLE LOGIC CONTROLLER
DCO	DOUBLE CLEANOUT	POC	POINT OF CONNECTION TO EXISTING
DECON	DECONTAMINATION	POR	POINT OF REMOVAL FROM EXISTING
DEMO	DEMOLITION, DEMOLISH	PRV	PRESSURE REDUCING VALVE
DX	DIRECT EXPANSION	PRV	PRESSURE RELIEF VALVE
EP	ELECTRIC-PNEUMATIC	PSIG	POUNDS PER SQUARE INCH GAGE
ENT	ENTERING	PSV	PRESSURE SAFETY VALVE
EXH	EXHAUST	PVC	POLYVINYL CHLORIDE
°F	DEGREES FAHRENHEIT		
FAS	FIXED HEAD AIR SAMPLER	QTY	QUANTITY
FC	FLEXIBLE CONNECTOR, FAIL CLOSED		
FD	FLOOR DRAIN	RA	RETURN AIR
FDMPR	FIRE DAMPER	RD	ROOF DRAIN
F.G.	FILTER GAUGE	RDO	ROOF DRAIN OVERFLOW
FLEX	FLEXIBLE	RLA	RELIEF AIR
FM	FACTORY MUTUAL	RO	REVERSE OSMOSIS
FMS	FACILITY MANAGEMENT SYSTEM	RPM	REVOLUTIONS PER MINUTE
FO	FAIL OPEN		
FPM	FEET PER MINUTE	SA	SUPPLY AIR
FS	FLOOR SINK	SHRV	SHOWER VALVE
FT.	FEET	SIM	SIMILAR
FT	FLAT TOP	SMFC	STRUCTURAL METAL FRAMING CHANNEL
FV	FLOW VENTURI	SOV	SOLENOID OPERATED VALVE
GFE	GOVERNMENT FURNISHED EQUIPMENT	SP	STATIC PRESSURE (INCHES OF WATER)
GIE	GOVERNMENT INSTALLED EQUIPMENT	SST	STAINLESS STEEL TUBING
GPH	GALLONS PER HOUR	TOC	TOP OF CONCRETE
GPM	GALLONS PER MINUTE	TP	TRAP PRIMER
		TX	TOILET EXHAUST
HD	HEAD, HUB DRAIN	TYP	TYPICAL
HEPA	HIGH EFFICIENCY PARTICULATE AIR	UL	UNDERWRITERS LABORATORIES
HFM	HAND AND FOOT MONITOR		
HGT	HEIGHT	V	VALVE
HOA	HAND-OFF-AUTOMATIC	VAC	VOLTS, ALTERNATING CURRENT
HORIZ	HORIZONTAL	VAV	VALVE, CHECK
HP	HORSEPOWER	VC	VARIABLE AIR VOLUME
HSTAT	HUMIDISTAT	VD	VOLUME DAMPER
HTG	HEATING	VEL	VELOCITY
HTR	HEATER	VTR	VENT THRU ROOF
HVAC	HEATING, VENTILATING AND AIR CONDITIONING	VX	VACUUM EXHAUST
HW	HOT WATER	WC	WATER COLUMN
HX	HEPA EXHAUST AIR	WCO	WALL CLEAN OUT
HYD	HYDRANT	WHA	WATER HAMMER ARRESTOR
HZ	HERTZ		

EQUIPMENT CODE LISTING

AFTERCOOLER

ACL AFTER COOLER

AIR DRYER

DAD
DAR REFRIGERANT AIR DRYER

AIR WASHER

WA AIR WASHER

BACKFLOW PREVENTER

BFP BACKFLOW PREVENTER

EQUIPMENT CODE LISTING (CONT.)

BOILERS

BHW HOT WATER BOILER (HEATING)
BS STEAM BOILER (HEATING)
BWS HOT WATER SUPPLY BOILER (POTABLE/NOT-POTABLE)

CHILLERS

CWA ABSORPTION WATER CHILLER
CWR REFRIGERANT WATER CHILLER

COMPRESSORS

CA AIR COMPRESSOR
CR REFRIGERANT COMPRESSOR

DEHUMIDIFIER

DHM DEHUMIDIFIER

FANS

FE EXHAUST AIR FAN
FRA RETURN AIR FAN
FS SUPPLY AIR FAN

FILTERS (AIR)

FAB REPLACEMENT AIR FILTER (6" DEEP AND LARGER)
FAC CLEANABLE AIR FILTER (PERMANENT TYPE)
FAH HEPA FILTER
FAL CARBON/CHARCOAL AIR FILTER
FAP EVAPORATIVE COOLER PAD
FAR REPLACEMENT AIR FILTER (UP TO 4" DEEP)
FES ELECTROSTATIC AIR FILTER

HEATERS (UNIT/SPACE WITH FANS)

HUG GAS HEATER
HUE ELECTRIC HEATER
HUI RADIANT (INFRARED) HEATER
HUS STEAM HEATER
HUW HOT WATER HEATER

HEAT EXCHANGERS

HXG HEAT EXCHANGER, WATER/GLYCOL TO AIR
HXO HEAT EXCHANGER, OIL TO WATER
HXS HEAT EXCHANGER, STEAM TO WATER
HXW HEAT EXCHANGER, WATER TO WATER

HUMIDIFIERS

HAS AIR HUMIDIFIER, STEAM SPRAY
HAW AIR HUMIDIFIER, WATER SPRAY

HVAC UNITS

ACR REFRIGERANT AIR CONDITIONING UNIT (DX COOLING ONLY)
CAE EVAPORATIVE AIR COOLER
CAW CHILLED WATER AIR CONDITIONING UNIT (COOLING ONLY)
HV HEATING AND VENTILATING UNIT
HVA HEATING, VENTILATING, AND AIR CONDITIONING UNIT

PUMPS

PA ACID PUMP (CAUSTIC, CHEMICAL, ETC.)
PBF BOILER FEED PUMP
PC CONDENSATE PUMP (ALL TYPES)
PCT COOLING TOWER PUMP
PCW CHILLED WATER PUMP
PDH HOT WATER PUMP (POTABLE)
PDW DEIONIZED WATER PUMP
PHW HOT WATER HEATING PUMP
PF FIRE PUMP
PPB PRESSURE BOOSTER PUMP
PS SUMP PUMP (REGARDLESS OF USE)
PSR RAW SEWAGE PUMP
PV VACUUM PUMP
PWS WATER SPRAY PUMP
PWT WASTE TREATMENT PUMP

TANKS

TAC TANK ACID OR CHEMICAL
TCA COMPRESSED AIR TANK
THW HOT WATER STORAGE TANK
TK TANK
TO FUEL OIL TANK
TX EXPANSION TANK

WATER HEATERS

HWE ELECTRIC WATER HEATER
HWG GAS WATER HEATER

WATER PRESSURE REGULATORS

RPW WATER PRESSURE REGULATOR

MATERIAL/CLASSIFICATION

CS - CARBON STEEL
CU - COPPER
CSS150 - STAINLESS STEEL 150#
SS300 - STAINLESS STEEL 300#
HDPE - HIGH DENSITY POLYETHYLENE

PIPING SYMBOLS

SYMBOL	DESCRIPTION
DRAINS	
—— RD ——	ROOF DRAIN
—— D ——	DRAIN
—— RDOF ——	ROOF DRAIN OVERFLOW
—— FD ——	FIRE WATER DRAIN
AIR/GAS	
—— CA ——	COMPRESSED AIR
—— NG ——	NATURAL GAS
—— N2 ——	NITROGEN
—— SG ——	SPECIALTY GAS
—— AR ——	ARGON GAS
—— P-10 ——	P-10 GAS
—— VAC ——	VACUUM
STEAM/CONDENSATE	
—— CONHP ——	CONDENSATE-HIGH PRESSURE (ABOVE 15 PSIG)
—— CONLP ——	CONDENSATE-LOW PRESSURE (15 PSIG OR LESS)
—— CONPMP ——	CONDENSATE-PUMPED
—— STMHP ——	STEAM-HIGH PRESSURE (ABOVE 15 PSIG)
—— STMLP ——	STEAM-LOW PRESSURE (15 PSIG OR LESS)
WASTE/VENT	
—— SW ——	SANITARY WASTE
— — SWV — —	SANITARY WASTE VENT
—— SWTE ——	SANITARY WASTEWATER TREATED EFFLUENT
—— VTR ——	VENT THROUGH ROOF
WATER	
—— DWR ——	DEIONIZED WATER RETURN
—— DWS ——	DEIONIZED WATER SUPPLY
—— DWD ——	DEIONIZED WATER DRAIN
—— NPWC ——	NON-POTABLE WATER-COLD
—— NPWH ——	NON-POTABLE WATER-HOT
—— NPWMU ——	NON-POTABLE WATER-MAKEUP
—— PWC ——	POTABLE WATER-COLD
—— PWHS ——	POTABLE WATER-HOT SUPPLY
—— PWHR ——	POTABLE WATER-HOT RECIRCULATION
—— RO ——	REVERSE OSMOSIS WATER

LINE LABELING LEGEND

HWS-XXX-XX-1"

- 1" — LINE SIZE
- XX — MATERIAL CLASSIFICATION
- XXX — LINE NUMBER
- HWS — LINE TYPE (SEE M-0001)

MATERIAL/CLASSIFICATION

CS = CARBON STEEL
CU = COPPER
SS = STAINLESS STEEL

GENERAL NOTES

1. COORDINATE ALL PLUMBING, PIPING AND EQUIPMENT WITH STRUCTURAL, MECHANICAL, FIRE PROTECTION, AND ELECTRICAL SYSTEMS AND PROVIDE NECESSARY OFFSETS TO AVOID CONFLICTS AND TO MAINTAIN EQUIPMENT ACCESS AND SERVICEABILITY.
2. FURNISH ALL NECESSARY STRUCTURES, INSERTS, SLEEVES AND HANGING DEVICES FOR INSTALLATION OF PLUMBING EQUIPMENT AND PIPING, ETC.
3. PROVIDE ALL NECESSARY MISCELLANEOUS ANGLES, CHANNELS, UNISTRUT AND SUPPORT AS REQUIRED TO ADEQUATELY SUPPORT THE PLUMBING PIPING, AND EQUIPMENT IN A MANNER CONSISTENT WITH THE CODES OF RECORD AND DOES NOT OVERLOAD THE BUILDING STRUCTURAL SYSTEM.
4. PROVIDE 2 FT. X 4 FT. CLEARANCE BELOW ALL HORIZONTALLY SUSPENDED PLUMBING ITEMS REQUIRING MAINTENANCE.
5. ALL DISCIPLINES (ELECTRICAL, FIRE PROTECTION, PIPING, PLUMBING, SHEET METAL) WILL COORDINATE INSTALLATION OF THEIR DISCIPLINE SO AS NOT TO INHIBIT ACCESS TO EQUIPMENT REQUIRING MAINTENANCE.
6. ALL STRUCTURAL WELDED CONNECTIONS SHALL BE PERFORMED IN ACCORDANCE WITH LANL APPROVED WELDING SPECIFICATION OR AWS D1.1/D1.1M SPECIFICATION FOR WELDING STEEL. ALL TUBULAR CONNECTIONS SHALL BE INSPECTED PER AWS D1.1 TABLE 6.1. ALL NON-TUBULAR COMPONENTS SHALL BE INSPECTED AS CYCLICALLY LOADED NON-TUBULAR CONNECTIONS PER AWS D1.1 TABLE 6.1. ALL PIPE WELDED CONNECTIONS SHALL BE PERFORMED IN ACCORDANCE WITH LANL APPROVED WELDING SPECIFICATION OR THE APPLICABLE ASME PRESSURE PIPING CODE IDENTIFIED IN THE CONSTRUCTION SPECIFICATION.
7. DETAILS WITH MISSING WELD INFORMATION (FOR EXAMPLE, SIZE OR NUMBER OF PLACES) SHALL BE PROVIDED ON FABRICATION DRAWINGS FOR APPROVAL PRIOR TO FABRICATION.

EQUIPMENT SYMBOLS

- P-3 — DIAMOND SYMBOL INDICATES EQUIPMENT/FIXTURE; NUMBER REFERS TO SPECIFIC EQUIPMENT IDENTIFIED IN PLUMBING SCHEDULE
- 1 — ELLIPSE SYMBOL INDICATES A KEYED NOTE; THE NUMBER REFERS TO A SPECIFIC NOTE LISTED IN THE KEYED NOTE LIST
- 1 — CIRCLE SYMBOL INDICATES UL LISTED FIRESTOP MATERIALS; THE NUMBER REFERS TO A SPECIFIC NOTE LISTED IN EACH FIRESTOPPING DETAIL
- POC — POINT OF CONNECTION BETWEEN CURRENT WORK AND EXISTING
- POR — POINT OF REMOVAL BETWEEN CURRENT WORK AND EXISTING
- EXISTING EQUIPMENT TO BE REMOVED
- EXISTING EQUIPMENT TO REMAIN
- UNDERFLOOR/UNDERGROUND PIPING

NO	DATE	CLASS REV	ADC	DESCRIPTION	DWN	DES	CHKD	SUB	APP

AECOM

RLWTF-UP LOW LEVEL WASTE SUBPROJECT

SYMBOL LEGEND, ABBREVIATIONS AND GENERAL NOTES

BLDG. 230 TA-50

DRAWN	V DAVISON
DESIGN	S MOORE
CHECKED	C MOYERS
DATE	5/8/14

SUBMITTED MANNY TARIN — APPROVED FOR RELEASE ED ARTIGUA

Los Alamos NATIONAL LABORATORY — PO Box 1663 Los Alamos, New Mexico 87545

SHEET P-0001 — 159 OF 434

CLASSIFICATION — REVIEWER — DATE

PROJECT ID 100761 — DRAWING NO C55864 — REV 0

CHARLES MOYERS NEW MEXICO 19838 REGISTERED PROFESSIONAL ENGINEER 05-09-14

D14214

File Location: P:\RLWTF LOW-LEVEL WASTE FACILITY\500 CAD\C55864 MAIN BUILDING\SHEETS\13 PLUMBING\A5864-P-0001-R0.DWG
Plotted By: MOORE, STEPHEN Plot Date: Monday, May 05, 2014

PROCESS FLOW DIAGRAMS AND P&ID SYMBOLS (GENERAL INSTRUMENT OR FUNCTION SYMBOLS)

(ALL SYMBOLS SHOWN ARE NOT NECESSARILY USED ON THE DRAWINGS)

SYMBOL	DESCRIPTION
	VALVE
	ANGLE VALVE
	BUTTERFLY VALVE
	BALL VALVE
	3-WAY VALVE
	4-WAY VALVE
	GATE VALVE (OS & Y VALVE)
	MIXING VALVE
	PRESSURE RELIEF
	DIAPHRAGM ACTUATOR
	TWO-WAY VALVE, FAIL CLOSED
	TWO-WAY VALVE, FAIL OPEN
	3-WAY VALVE W/DIAPHRAGM ACTUATOR
	4-WAY VALVE W/DIAPHRAGM ACTUATOR
	SPRING-OPPOSED SINGLE-ACTING ACTUATOR
	SPRING-OPPOSED DOUBLE-ACTING ACTUATOR
	ELECTROHYDRAULIC ACTUATOR
	HAND ACTUATOR OR HANDWHEEL
	RESTRICTION ORIFICE IN PROCESS LINE
	RESTRICTION ORIFICE DRILLED IN VALVE OR CIRCUIT SETTER
	FLOW STRAIGHTENING VANE
	DIAPHRAGM PRESSURE-BALANCED
	PRESSURE-REDUCING REGULATOR, SELF-CONTAINED, WITH HANDWHEEL ADJUSTABLE SET POINT
	PRESSURE REDUCING REGULATOR WITH EXTERNAL PRESSURE TAP
	DIFFERENTIAL-PRESSURE-REDUCING REGULATOR WITH INTERNAL AND EXTERNAL TAPS
	BACKPRESSURE REGULATOR, SELF-CONTAINED
	BACKPRESSURE REGULATOR WITH EXTERNAL PRESSURE TAP
PI	PRESSURE-REDUCING REGULATOR WITH INTEGRAL OUTLET PRESSURE RELIEF VALVE, AND OPTIONAL PRESSURE INDICATOR
PI	PRESSURE INDICATOR
	FLOW DIRECTION
	PRESSURE RELIEF OR SAFETY VALVE
	VACUUM RELIEF VALVE
	PRESSURE RELIEF OR SAFETY VALVE, STRAIGHT-THROUGH PATTERN, SPRING- OR WEIGHT-LOADED, OR WITH INTEGRAL PILOT
	RUPTURE DISK OR SAFETY HEAD FOR VACUUM RELIEF

SYMBOL	DESCRIPTION
	RUPTURE DISK OR SAFETY HEAD FOR PRESSURE RELIEF
	PILOT LIGHT X=COLOR R=RED G=GREEN
	FLEX CONNECTION (RUBBER)
	FLEX CONNECTION (STEEL BRAIDED)
	SINGLE PITOT TUBE OR PITOT VENTURI TUBE
	FLOW METER
	FLOW NOZZLE OR VENTURI
	REDUCER
	SCREWED CAP
	PIPE CAP
	HOSE CONNECTION
	FLANGED CONNECTION (PIPING OR EQUIP)
	FLOW ORIFICE FIXED
	STRAINER WITH VALVE
	Y-STRAINER
	COMPRESSED AIR
	DUCTED AIR FLOW FROM SPACE
	CAPPED AIR DUCT
	SEISMIC SHUT OFF VALVE
	GATE VALVE (OPEN)
	GATE VALVE (CLOSED)
	GLOBE VALVE (OPEN)
	GLOBE VALVE (CLOSED)
	NEEDLE VALVE (OPEN)
	NEEDLE VALVE (CLOSED)
	PLUG VALVE (OPEN)
	PLUG VALVE (CLOSED)
	SEISMIC VALVE
	BALL VALVE (OPEN)
	BALL VALVE (CLOSED)
	BALANCING VALVE
	CHECK VALVE
	SPRING CHECK VALVE
	ANGLE VALVE (OPEN)
	ANGLE VALVE (CLOSED)
	SAFETY OR RELIEF VALVE (INLET PORT SHOWN CLOSED)
	THREE-WAY VALVE (CLOSED PORT DARKENED)
	FOUR-WAY VALVE (ARROWS INDICATE FLOW DIRECTION)
	BALL-CHECK VALVE
	DUAL PURGE VALVE
	ALARM VALVE
	AIR INTAKE FILTER
	ALARM

SYMBOL	DESCRIPTION
	IN-LINE FILTER
	DOUBLE BASKET STRAINER
	HOSE REEL
	OPEN DRAIN OR FUNNEL (SHOWN)
XX	XX- DRAIN SYSTEM ANNOTATIONS
	DRAIN (PLAN VIEW)
	CLEANOUT (PLAN VIEW)
	SANITARY VENT
	SILENCER/MUFFLER
	SPACE PENETRATIONS
	FIXED LOUVERS
XX	TRAP XX ANNOTATES FUNCTION
L	LUBRICATOR
	55 GALLON DRUM
	THERMOSTATIC VENT
	SPRINKLER ALARM (WATER MOTOR GONG)
	FLOW ALARM VALVE
	COOLING TOWER
	CHILLER
	HORIZONTAL CENTRIFUGAL PUMP
	CENTRIFUGAL FAN WITH VARIABLE INLET VANES
	BLOWER/CENTRIFUGAL FAN
	ROTARY PUMP
	VERTICAL WET PIT PUMP
	PROGRESSIVE CAVITY PUMP
	SUMP PUMP
	HEATER
	HEAT EXCHANGER
	BUBBLE GAUGE
	TEMPERATURE CONTROL VALVE
	OVER PRESSURE/UNDER PRESSURE SHUT-OFF VALVE

SYMBOL	DESCRIPTION
	AXIAL FAN
	AXIAL FAN WITH VARIABLE INLET VANES
	2-STAGE RECIPROCATING AIR COMPRESSOR
	SINGLE STAGE RECIPROCATING AIR COMPRESSOR
	2-STAGE ROTARY SCREW AIR COMPRESSOR
	RECIPROCATING PUMP
	PRESSURE VESSELS, VERTICAL (SHOWN) OR HORIZONTAL (TANKS, RECEIVERS, SEPARATORS, SUMPS ETC.)
	TANK
	HVAC COIL (A) E ELECTRIC HW HEATING WATER DX DIRECT EXPANSION NG INDIRECT GAS FIRED CH CHILLED WATER STM STEAM GL GLYCOL (B) HCL HEATING COIL CCL COOLING COIL HRC HEAT RECOVERY COIL
	UNIT HEATER (A) HW HEATING WATER DX DIRECT EXPANSION STM STEAM (B) HCL HEATING COIL
	PRESSURIZED GAS BOTTLE
	DOUBLE CONTAINMENT TANK
	HUMIDIFIER
	MANUAL BALANCE DAMPER
	MULTI POINT PITOT TUBE ARRAY
NO/NC	DAMPER (NORMALLY OPEN) OR (NORMALLY CLOSED)
	EVAPORATIVE AIR COOLER
	OPPOSED BLADE DAMPER FOR HVAC EQUIPMENT
	BACKDRAFT DAMPER
	AXIAL FAN
TDV	TRIPLE DUTY VALVE

SYMBOL	DESCRIPTION
	SINGLE DUCT VARIABLE VOLUME BOX
A B	WING TYPE FACE AND BYPASS DAMPER (A) HW HEATING WATER DX DIRECT EXPANSION CH CHILLED WATER STM STEAM GL GLYCOL (B) HCL HEATING COIL CCL COOLING COIL HRC HEAT RECOVERY COIL
	COLLECTION BIN
	CYCLONE SEPARATOR
	FLUID RECOVERY PUMP
	DUAL SERVICE HEAT EXCHANGER
	MULTI BLADE DAMPER
	SINGLE BLADE DAMPER
M	MOTOR
	TEST PORT
	PILOT LIGHT
	SEPARATOR
	MIST ELIMINATOR
HEPA	HEPA FILTER
	CARBON ABSORBER FILTER
	ATMOSPHERIC FILTER
	PIPE IN PIPE (PIP)

SYMBOL	DESCRIPTION
SD	SUCTION DIFFUSER
	PNEUMATIC-ELECTRIC TRANSDUCER
FT	FLOW TRANSMITTER
	BACK FLOW PREVENTER W/PRESSURE REDUCTION
	FIRESCREEN
	PREFILTER
	AIR COMPRESSOR W/TANK
	VACUUM PUMP
XXXX	ROOM NUMBER

NOTE: -▷◁- = NORMALLY OPEN (OPEN CENTER)
-▶◀- = NORMALLY CLOSED (SOLID CENTER)

NO	DATE	CLASS REV	ADC	DESCRIPTION	DWN	DES	CHKD	SUB	APP

AECOM

RLWTF-UP LOW LEVEL WASTE SUBPROJECT

PIPING & INSTRUMENTATION DIAGRAM SYMBOL LEGEND

DRAWN	V DAVISON
DESIGN	S MOORE
CHECKED	C MOYERS
DATE	5/8/14

BLDG. 230 TA-50

SUBMITTED MANNY TARIN — APPROVED FOR RELEASE ED ARTIGLIA

Los Alamos NATIONAL LABORATORY PO Box 1663 Los Alamos, New Mexico 87545

SHEET P-0002

160 OF 434

CLASSIFICATION — REVIEWER — DATE

PROJECT ID 100761 — DRAWING NO C55864 — REV 0

CHARLES MOYERS NEW MEXICO 15539 REGISTERED PROFESSIONAL ENGINEER 05-08-14

11221

File Location: P:\RLWTF LOW-LEVEL WASTE FACILITY\300 CAD\C55864 MAIN BUILDING\SHEETS\13 PLUMBING\55864-P-0002-R0.DWG
Plotted By: KOEBL, STEPHEN Plot Date: Monday, May 05, 2014

PROCESS FLOW AND PIPING AND INSTRUMENTATION DIAGRAM LEGEND

(ALL SYMBOLS SHOWN ARE NOT NECESSARILY USED ON THE DRAWINGS)

LINE TYPES

SYMBOL	DESCRIPTION
———	PROCESS FLOW LINE
———	INSTRUMENT SUPPLY OR CONNECTION TO PROCESS
—/—/—	UNDEFINED SIGNAL
—//—//—	PNEUMATIC SIGNAL
- - - - - -	ELECTRIC SIGNAL
—L—L—	HYDRAULIC SIGNAL
—M—M—	CAPILLARY TUBE
~~	ELECTROMAGNETIC OR SONIC SIGNAL (GUIDED)
~ ~	ELECTROMAGNETIC OR SONIC SIGNAL (NOT GUIDED)
—o—o—	INTERNAL SYSTEM LINK (SOFTWARE OR DATA LINK)
—•—•—	MECHANICAL LINK
OPTIONAL BINARY (ON–OFF) SYMBOLS	
—//—//—	PNEUMATIC BINARY SIGNAL
—/\—/\—	ELECTRIC BINARY SIGNAL
—E—E—	ELECTRICAL HEAT TRACING
—S—S—	STEAM HEAT TRACING
XX	FP – FLOOR PENETRATION RP – ROOF PENETRATION WP – WALL PENETRATION SB – SYSTEM BREAK

INSTRUMENT/FUNCTION SYMBOLS

	PRIMARY LOCATION NORMALLY ACCESSIBLE TO OPERATOR	FIELD MOUNTED	AUXILIARY LOCATION NORMALLY ACCESSIBLE TO OPERATOR	AUXILIARY LOCATION NORMALLY INACCESSIBLE TO OPERATOR
DISCRETE INSTRUMENTS	XX / XXX	XX / XXX	XX / XXX	XX / XXX
SHARED DISPLAY, SHARED CONTROL	XX / XXX	XX / XXX	XX / XXX	XX / XXX
COMPUTER FUNCTION	XX / XXX	XX / XXX	XX / XXX	XX / XXX
PROGRAMMABLE LOGIC CONTROL	XX / XXX	XX / XXX	XX / XXX	XX / XXX

XX / XXX — FLOW INDICATOR

XX / XXX XX / XXX — INSTRUMENTS SHARING COMMON HOUSING

X / XX — PANEL MOUNTED PATCHBOARD POINT 12

VALVE & INSTRUMENTATION FUNCTION IDENTIFIERS (SELECTED)

FIRST-LETTERS	INITIATING, MEASURED, OR CONTROLLED VARIABLE	CONTROLLERS: RECORDING	CONTROLLERS: INDICATING	CONTROLLERS: BLIND	VALVES	READOUT DEVICE: RECORDING	READOUT DEVICE: INDICATING	SWITCHES AND ALARM DEVICES *: HIGH**	SWITCHES AND ALARM DEVICES *: LOW	SWITCHES AND ALARM DEVICES *: COMB	TRANSMITTERS: RECORDING	TRANSMITTERS: INDICATING	TRANSMITTERS: BLIND	SOLENOIDS, RELAYS, COMPUTING DEVICES	PRIMARY ELEMENT	TEST POINT	WELL OR PROBE	VIEWING DEVICE, GLASS	SAFETY DEVICE	FINAL ELEMENT
A	ANALYSIS	ARC	AIC	AC		AR	AI	ASH	ASL	ASHL	ART	AIT	AT	AY	AE	AP	AW			AV
B	BURNER/ COMBUSTION	BRC	BIC	BC		BR	BI	BSH	BSL	BSHL	BRT	BIT	BT	BY	BE		BW	BG		BZ
C	CONDUCTIVITY		CIC	CC										CCD	CE					
D	USER'S CHOICE																			
E	VOLTAGE	ERC	EIC	EC		ER	EI	ESH	ESL	ESHL	ERT	EIT	ET	EY	EE					EZ
F	FLOW RATE	FRC	FIC	FC	FCV FICV	FR	FI	FSH	FSL	FSHL	FRT	FIT	FT	FY	FE	FP		FG		FV
FQ	FLOW QUANTITY	FQRC	FQIC			FQR	FQI	FQSH	FQSL			FQIT	FQT	FQY	FQE					FQV
FF	FLOW RATIO	FFRC	FFIC	FFC		FFR	FFI	FFSH	FFSL						FE					FFV
G	USER'S CHOICE																			
H	HAND		HIC	HC	HV					HS										HV
I	CURRENT	IRC	IIC			IR	II	ISH	ISL	ISHL	IRT	IIT	IT	IY	IE					IZ
J	POWER	JRC	JIC	ARC		JR	JI	JSH	JSL	JSHL	JRT	JIT	JT	JY	JE					JV
K	TIME	KRC	KIC	KC	KCV	KR	KI	KSH	KSL	KSHL	KRT	KIT	KT	KY	KE					KV
L	LEVEL	LRC	LIC	LC	LCV	LR	LI	LSH	LSL	LSHL	LRT	LIT	LT	LY	LE		LW	LG		LV
M	MOISTURE/ HUMIDITY						MI						MT							
N	USER'S CHOICE																			
O	USER'S CHOICE																			
P	PRESSURE VACUUM	PRC	PIC	PC	PCV	PR	PI	PSH	PSL	PSHL	PRT	PIT	PT	PY	PE	PTP			PSV PSE	PV
PD	PRESSURE DIFFERENTIAL	PDRC	PDIC	PDC	PDCV	PDR	PDI	PDSH	PDSL		PDRT	PDIT	PDT	PDY	PE	PTP				PDV
Q	QUANTITY	QRC	QIC			QR	QI	QSH	QSL	QSHL	QRT	QIT	QT	QY	QE					QZ
R	RADIATION	RRC	RIC	RC		RR	RI	RSH	RSL	RSHL	RRT	RIT	RT	RY	RE		RW			RZ
S	SPEED	SRC	SIC	SC	SCV	SR	SI	SSH	SSL	SSHL	SRT	SIT	ST	SY	SE					SV
T	TEMPERATURE	TRC	TIC	TC	TCV	TR	TI	TSH	TSL	TSHL	TRT	TIT	TT	TY	TE	TP	TW		TSE	TV
T	TEMPERATURE DIFFERENTIAL	TDRC	TDIC	TDC	TDCV	TDR	TDI	TDSH	TDSL		TDRT	TDIT	TDT	TDY	TDE	TDP TP	TDW TW			TDV
U	MULTIVARIABLE					UR	UI							UY						UV
V	MACHINERY VIBRATION ANALYSIS					VR	VI	VSH VS	VSL	VSHL	VRT	VIT	VT	VY	VE					VZ
W	WEIGHT FORCE	WRC	WIC	WC	WCV	WR	WI	WSH	WSL	WSHL	WRT	WIT	WT	WY	WE					WZ
WD	WEIGHT FORCE DIFFERENTIAL	WDRC	WDIC	WDC	WDCV	WDR	WDI	WDSH	WDSL		WDRT	WDIT	WDT	WDY	WDE					WDZ
X	USER'S CHOICE																			
Y	EVENT STATE PRESENCE		YIC	YC		YR	YI	YSH	YSL				YT	YY	YE					YZ
Z	POSITION DIMENSION	ZRC	ZIC	ZC	ZCV	ZR	ZI	ZSH	ZSL	ZSHL	ZRT	ZIT	ZT	ZY	ZE					ZV
ZD	GAUGING DEVIATION	ZDRC	ZDIC	ZDC	ZDCV	ZDR	ZDI	ZDSH	ZDSL		ZDRT	ZDIT	ZDT	ZDY	ZDE					ZDV

NOTE:
THIS TABLE IS NOT ALL–INCLUSIVE.

* A, ALARM, THE ANNUNCIATING DEVICE, MAY BE USED IN THE SAME FASHION AS S, SWITCH, THE ACTING DEVICE.

** THE LETTERS H AND L MAY BE OMITTED IN THE UNDEFINED CASE.

OTHER POSSIBLE COMBINATIONS:

FO	(RESTRICTION ORIFICE)	PFR	(RATIO)
FRK, HIK	(CONTROL STATIONS)	KQI	(RUNNING TIME INDICATOR)
FX	(ACCESSORIES)	QQI	(INDICATING COUNTER)
TJR	(SCANNING RECORDER)	WKIC	(RATE–OF–WEIGHT–LOSS CONTROLLER)
LLH	(PILOT LIGHT)	HMS	(HAND MOMENTARY SWITCH)

INSTRUMENT/EQUIPMENT LABELING LEGEND

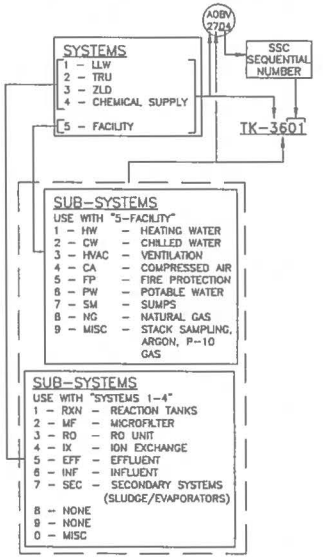

(ALL SYMBOLS SHOWN ARE NOT NECESSARILY USED ON THE DRAWINGS)

INSTRUMENT/FUNCTION SYMBOLS

SYMBOL	DESCRIPTION
X	P = PURGE OR FLUSHING DEVICE R = RESET FOR LATCH–TYPE ACTUATOR
X	S = SOLENOID D = DIGITAL P = PILOT T = TRAP M = MAGNETIC FLOWMETER SP = SET POINT
√	ROOT EXTRACTION
±	BIAS
X	MULTIPLY
>	HIGH SELECTING
<	LOW SELECTING
↑	HIGH LIMITING
↓	LOW LIMITING
K	PROPORTIONAL
–K	REVERSE PROPORTIONAL
+	SUMMING
÷	DIVIDING
CA–1	EQUIPMENT TAG

PLAN BREAKS & CONTINUATION FLAGS

SYMBOL	DESCRIPTION
Y# x OR x Y#	PIPE OR WIRE IS CONTINUED ON DRAWING X (INCLUDING SHEET NUMBER), GRID COORDINATE (Y#); FLOW IS TO THAT DRAWING.
x Y# OR Y# x	PIPE OR WIRE IS CONTINUED ON DRAWING X (INCLUDING SHEET NUMBER), GRID COORDINATE (Y#); FLOW IS FROM THAT DRAWING.
x Y#	PIPE OR WIRE IS CONTINUED ON DRAWING X (INCLUDING SHEET NUMBER), GRID COORDINATE (Y#); FLOW IS IN BOTH DIRECTIONS

INTERLOCK SYMBOL

I / X — HARD WIRED INTERLOCK

INTERLOCK NUMBER

CHARLES MOLNAR 18830 NEW MEXICO LICENSED PROFESSIONAL ENGINEER
05-07-14

NO	DATE	CLASS REV	ADC	DESCRIPTION	DWN	DES	CHKD	SUB	APP

AECOM

RLWTF–UP LOW LEVEL WASTE SUBPROJECT

PIPING & INSTRUMENTATION DIAGRAM SYMBOL LEGEND

BLDG. 230 TA–50

DRAWN	V DAVISON
DESIGN	S MOORE
CHECKED	C MOYERS
DATE	5/8/14

SUBMITTED: MANNY TARIN

APPROVED FOR RELEASE: ED ARTIGLIA

Los Alamos NATIONAL LABORATORY — PO Box 1663, Los Alamos, New Mexico 87545

SHEET P–0003

161 OF 434

CLASSIFICATION | REVIEWER | DATE

PROJECT ID: 100761 | DRAWING NO: C55864 | REV: 0

21212

File Location: P:\RLWTF LOW-LEVEL WASTE FACILITY\300 CAD\C55864 MAIN BUILDING\SHEETS\13 PLUMBING\55864-P-0003-R0.DWG
Plotted By: MOORE, STEPHEN Plot Date: Monday, May 05, 2014

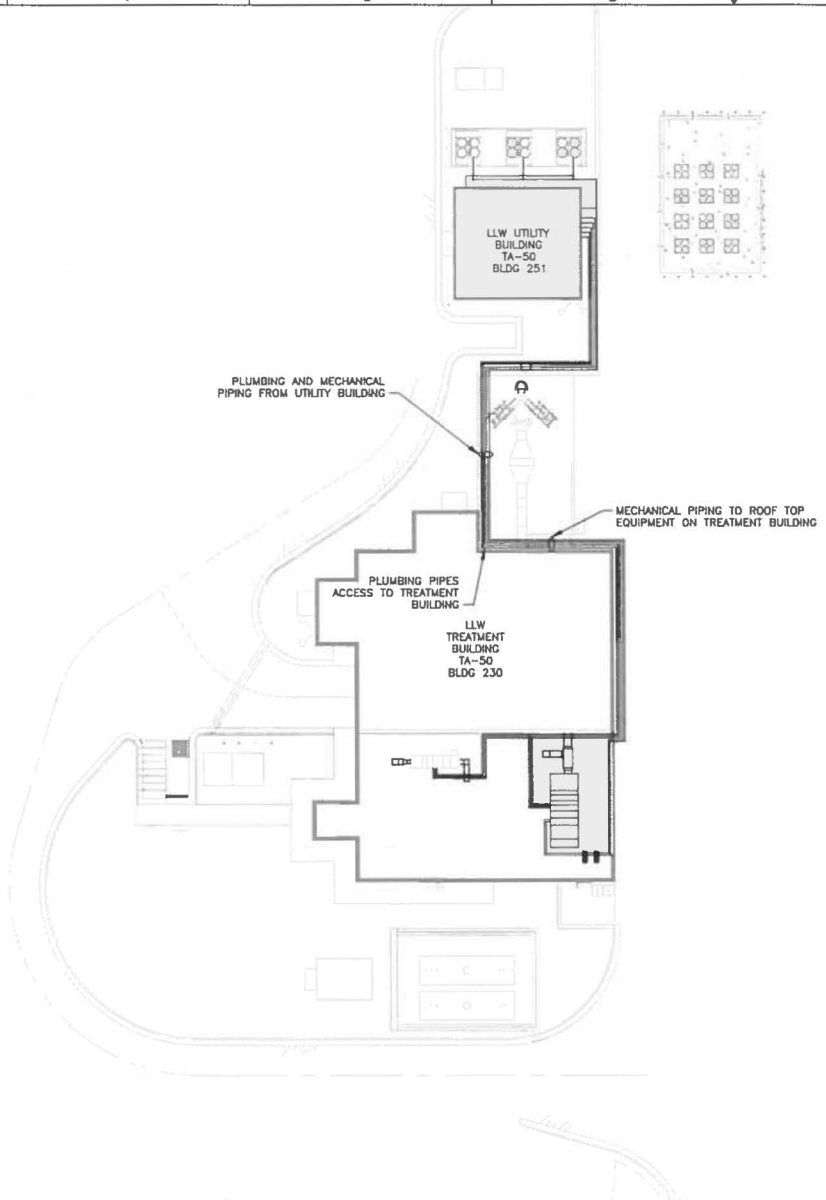

SITE PLAN

1/16"=1'-0"

GENERAL NOTES

1. IF THIS SHEET IS NOT 24"X36", THEN IT IS A REDUCED SIZE PLOT. USE THE GRAPHIC SCALE ACCORDINGLY.
2. FOR SYMBOLS AND ABBREVIATIONS, SEE SHEETS P-0001 THROUGH P-0003.

NO	DATE	CLASS REV	ADC	DESCRIPTION	DWN	DES	CHKD	SUB	APP

AECOM

RLWTF-UP LOW LEVEL WASTE SUBPROJECT

SITE PLAN

BLDG. 230 TA-50

DRAWN	V DAVISON
DESIGN	S MOORE
CHECKED	C MOYERS
DATE	5/8/14

SUBMITTED: MANNY TARIN

APPROVED FOR RELEASE: ED ARTIGLIA

Los Alamos NATIONAL LABORATORY PO Box 1663 Los Alamos, New Mexico 87545

SHEET P-1000

162 OF 434

CLASSIFICATION | REVIEWER | DATE

PROJECT ID 100761 | DRAWING NO C55864 | REV 0

CHARLES MOYERS 16830 LICENSED PROFESSIONAL ENGINEER

05-08-14

File Location: P:\RLWTF LOW-LEVEL WASTE FACILITY\500 CAD\C55864 MAIN BUILDING\SHEETS\13 PLUMBING\55864-P-1000-R0.DWG
Plotted By: MOORE, STEPHEN Plot Date: Monday, May 05, 2014

: 12213

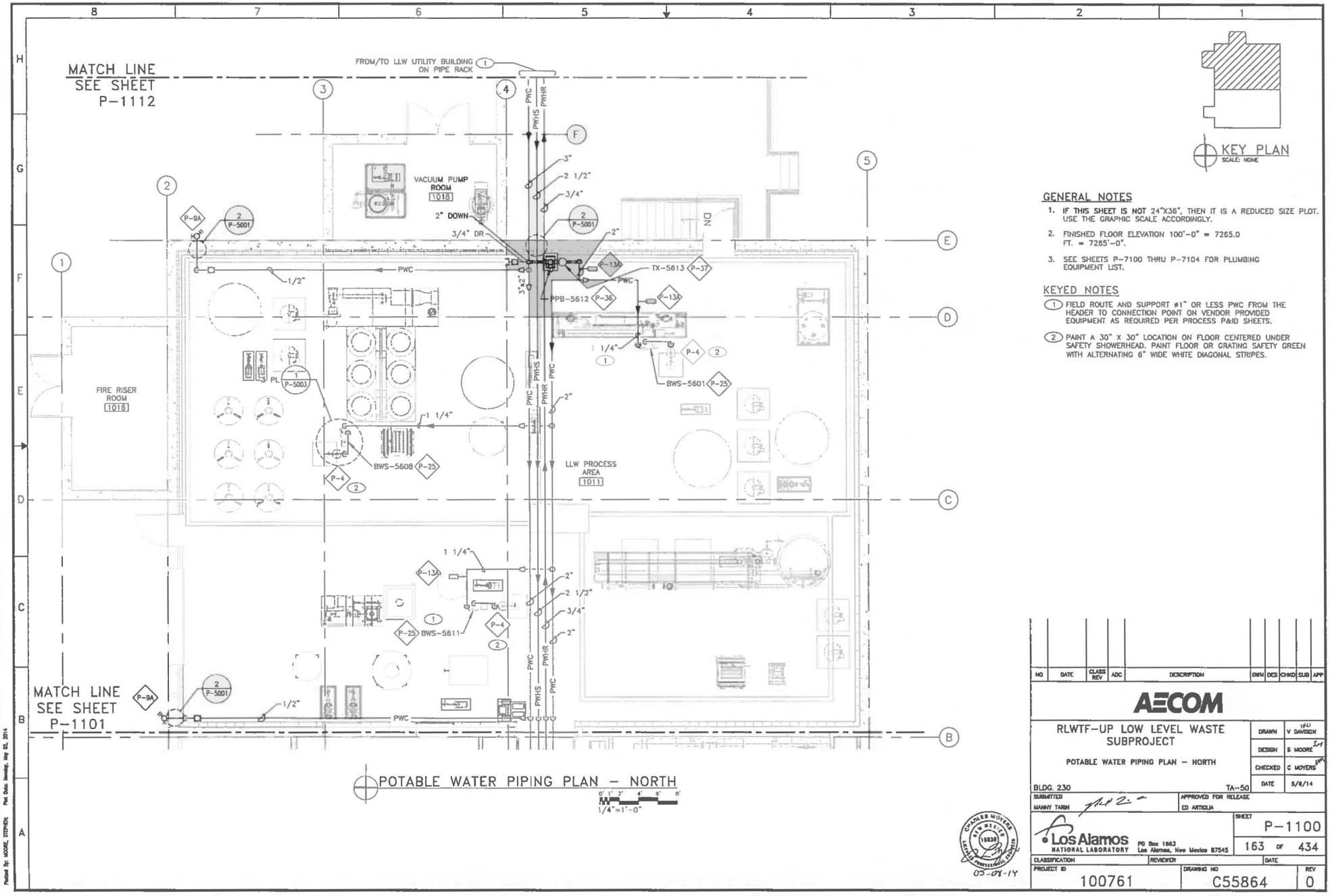

POTABLE WATER PIPING PLAN – NORTH

1/4"=1'-0"

KEY PLAN
SCALE: NONE

GENERAL NOTES

1. IF THIS SHEET IS NOT 24"X36", THEN IT IS A REDUCED SIZE PLOT. USE THE GRAPHIC SCALE ACCORDINGLY.
2. FINISHED FLOOR ELEVATION 100'-0" = 7265.0 FT. = 7265'-0".
3. SEE SHEETS P-7100 THRU P-7104 FOR PLUMBING EQUIPMENT LIST.

KEYED NOTES

(1) FIELD ROUTE AND SUPPORT ø1" OR LESS PWC FROM THE HEADER TO CONNECTION POINT ON VENDOR PROVIDED EQUIPMENT AS REQUIRED PER PROCESS P&ID SHEETS.

(2) PAINT A 30" X 30" LOCATION ON FLOOR CENTERED UNDER SAFETY SHOWERHEAD. PAINT FLOOR OR GRATING SAFETY GREEN WITH ALTERNATING 6" WIDE WHITE DIAGONAL STRIPES.

NO	DATE	CLASS REV	ADC	DESCRIPTION	DWN	DES	CHKD	SUB	APP

AECOM

RLWTF-UP LOW LEVEL WASTE SUBPROJECT

POTABLE WATER PIPING PLAN – NORTH

DRAWN	V DAVISON
DESIGN	S MOORE
CHECKED	C MOYERS
DATE	5/8/14

BLDG. 230 TA-50

SUBMITTED: MANNY TARIN — APPROVED FOR RELEASE: ED ARTIGLIA

Los Alamos NATIONAL LABORATORY — PO Box 1663, Los Alamos, New Mexico 87545

SHEET	
	P-1100
	163 OF 434

CLASSIFICATION | REVISION | DATE

PROJECT ID	DRAWING NO	REV
100761	C55864	0

CHARLES MOYERS — NEW MEXICO — 15838 — LICENSED PROFESSIONAL ENGINEER — 05-07-14

File Location: P:\RLWTF LOW-LEVEL WASTE FACILITY\300 CAD\C55864 MAIN BUILDING\SHEETS\13 PLUMBING\55864-P-1100-R0.DWG
Plotted By: MOORE, STEPHEN Plot Date: Monday, May 05, 2014

11221

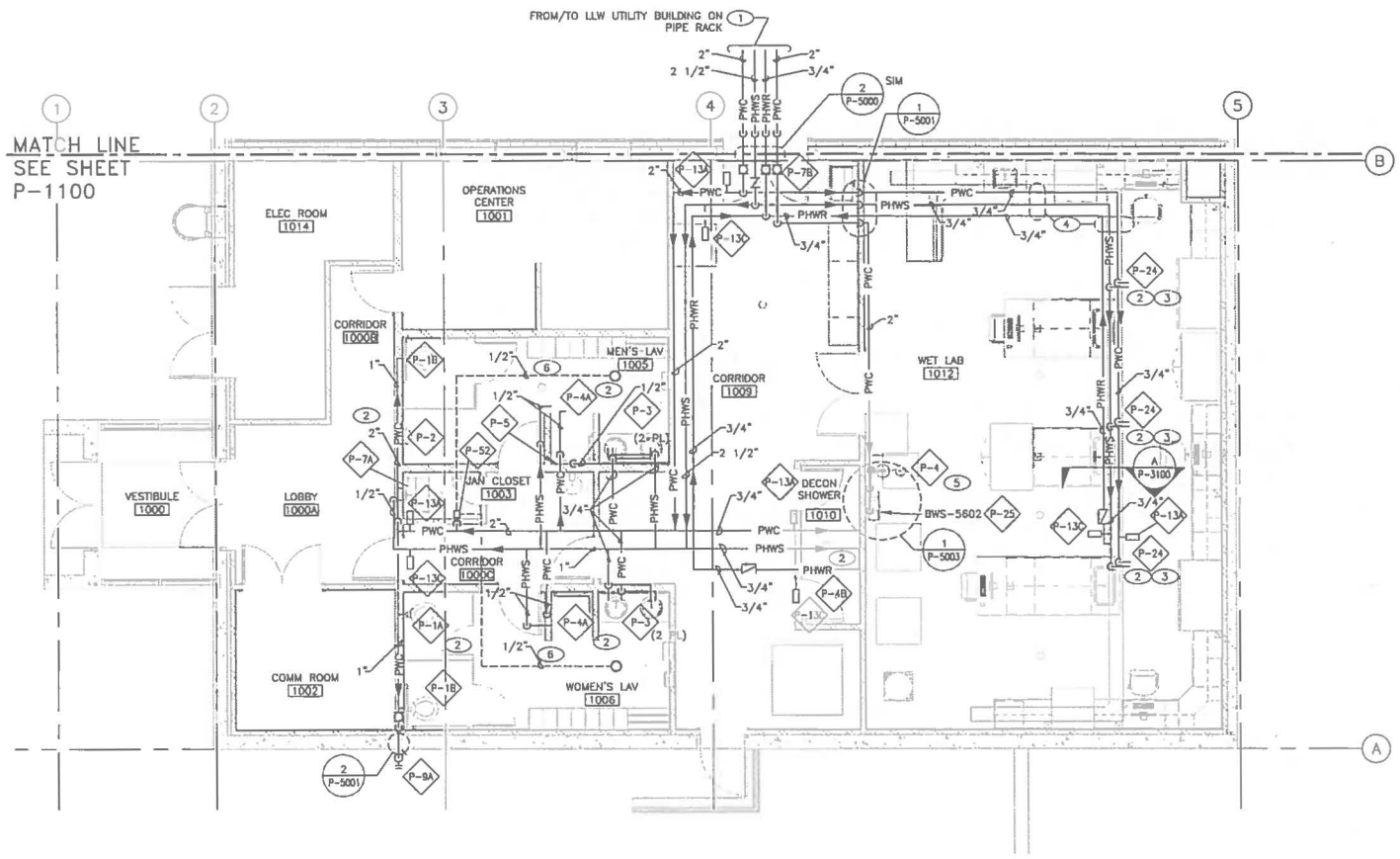

POTABLE WATER PIPING PLAN – SOUTH

1/4"=1'-0"

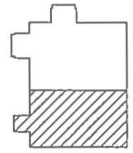

KEY PLAN
SCALE: NONE

GENERAL NOTES

1. IF THIS SHEET IS NOT 24"X36", THEN IT IS A REDUCED SIZE PLOT. USE THE GRAPHIC SCALE ACCORDINGLY.
2. FINISHED FLOOR ELEVATION 100'-0" = 7265.0 FT. = 7265'-0"
3. SEE SHEETS P-7100 THRU P-7102 FOR PLUMBING EQUIPMENT LIST.

KEYED NOTES

1. FOR PROCESS AREA PIPING, SEE DRAWING C55864, SHEET P-1100. FOR LLW UTILITY BUILDING PIPING SEE DRAWING C55865, SHEET P-1200.
2. FIELD ROUTE AND SUPPORT 1"ø OR LESS PWC, PWHS, AND PWHR FROM THE HEADER TO CONNECTION POINT ON VENDOR PROVIDED EQUIPMENT.
3. SINK MOUNTED EYEWASH NOT SHOWN FOR CLARITY.
4. PIPING IN THE WET LAB IS LOCATED IN THE FLOOR UTILITY TRENCH.
5. PAINT A 30" X 30" LOCATION ON FLOOR CENTERED UNDER SAFETY SHOWERHEAD. PAINT FLOOR OR GRATING SAFETY GREEN WITH ALTERNATING 6" WIDE WHITE DIAGONAL STRIPES.
6. FIELD ROUTE 1/2"ø PWC FROM TRAP PRIMER TO FLOOR DRAIN, BELOW SLAB.

NO	DATE	CLASS REV	ADC	DESCRIPTION	DWN	DES	CHKD	SUB	APP

AECOM

RLWTF-UP LOW LEVEL WASTE SUBPROJECT

POTABLE WATER PIPING PLAN – SOUTH

BLDG. 230 TA-50

DRAWN	V DAVISON
DESIGN	S MOORE
CHECKED	C MOYERS
DATE	5/8/14

SUBMITTED: MANNY TARIN

APPROVED FOR RELEASE: ED ARTIGLIA

Los Alamos NATIONAL LABORATORY PO Box 1663 Los Alamos, New Mexico 87545

SHEET P-1101

164 OF 434

CLASSIFICATION | REVIEWER | DATE

PROJECT ID 100761 | DRAWING NO C55864 | REV 0

CHARLES MOYERS NEW MEXICO 18830 LICENSED PROFESSIONAL ENGINEER

05-08-14

File Location: P:\RLWTF LOW-LEVEL WASTE FACILITY\500 CAD\C55864 MAIN BUILDING\SHEETS\13 PLUMBING\55864-P-1101-RD.DWG
Plotted By: MOORE, STEPHEN Plot Date: Monday, May 05, 2014

: 12215

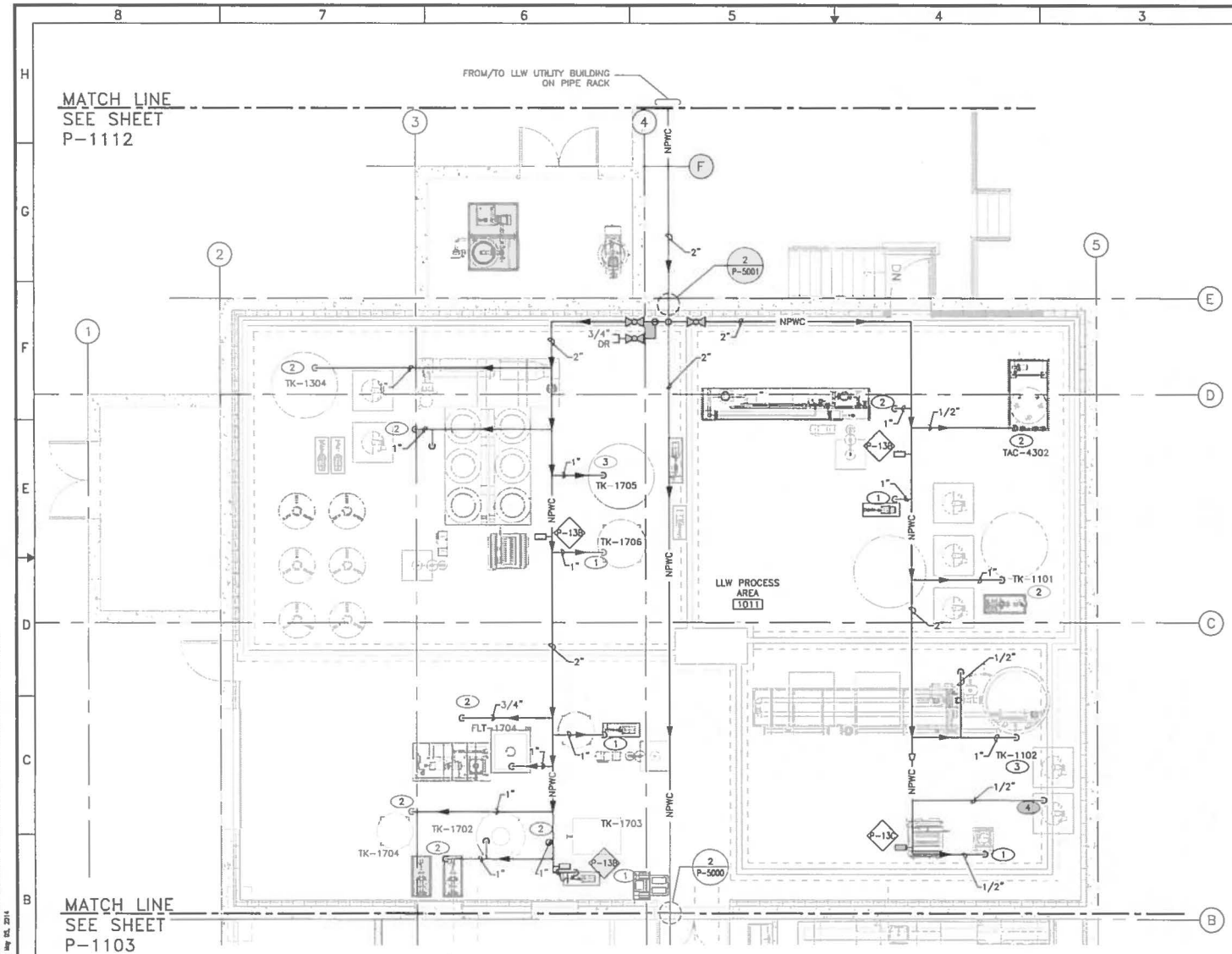

NON-POTABLE WATER PIPING PLAN – NORTH

1/4"=1'-0"

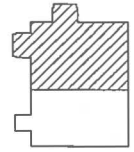

KEY PLAN
SCALE: NONE

GENERAL NOTES

1. IF THIS SHEET IS NOT 24"X36", THEN IT IS A REDUCED SIZE PLOT. USE THE GRAPHIC SCALE ACCORDINGLY.
2. FINISHED FLOOR ELEVATION 100'-0" = 7265.0 FT. = 7265'-0".
3. SEE SHEETS P-7100 THRU P-7104 FOR PLUMBING EQUIPMENT LIST.

KEYED NOTES

1. FIELD ROUTE AND SUPPORT NPWC BRANCH CONNECTIONS TO SAMPLERS FROM 1" NPWC DROP LOCATIONS. SEE PROCESS P&ID SHEETS.
2. FIELD ROUTE AND SUPPORT 1" NPWC CONNECTIONS TO VENDOR SUPPLIED EQUIPMENT CONNECTIONS. SEE PROCESS P&ID SHEETS.
3. FIELD ROUTE AND SUPPORT BRANCH CONNECTION FROM NPWC MAIN HEADER TO TANK. SEE PROCESS P&ID SHEETS FOR TANK NOZZLE LOCATIONS.
4. FIELD ROUTE AND SUPPORT BRANCH CONNECTION FOR WATER TO MAGNESIUM SULPHATE MAKE UP.

NO	DATE	CLASS REV	ADC	DESCRIPTION	DWN	DES	CHKD	SUB	APP

AECOM

RLWTF-UP LOW LEVEL WASTE SUBPROJECT

NON-POTABLE WATER PIPING PLAN – NORTH

BLDG. 230 TA-50

DRAWN	V DAVISON
DESIGN	S MOORE
CHECKED	C MOYERS
DATE	5/8/14

SUBMITTED: MANNY TARIN

APPROVED FOR RELEASE: ED ARTIGLIA

Los Alamos NATIONAL LABORATORY PO Box 1663 Los Alamos, New Mexico 87545

SHEET P-1102

165 OF 434

CLASSIFICATION | REVIEWER | DATE

PROJECT ID 100761 | DRAWING NO C55864 | REV 0

CHARLES MOYERS NEW MEXICO 18839 LICENSED PROFESSIONAL ENGINEER

05-08-14

File Location: P:\RLWTF LOW-LEVEL WASTE FACILITY\500 CAD\C55864 MAIN BUILDING\SHEETS\13 PLUMBING\55864-P-1102-R0.DWG
Plotted By: MOORE, STEPHEN Plot Date: Monday, May 05, 2014

12216

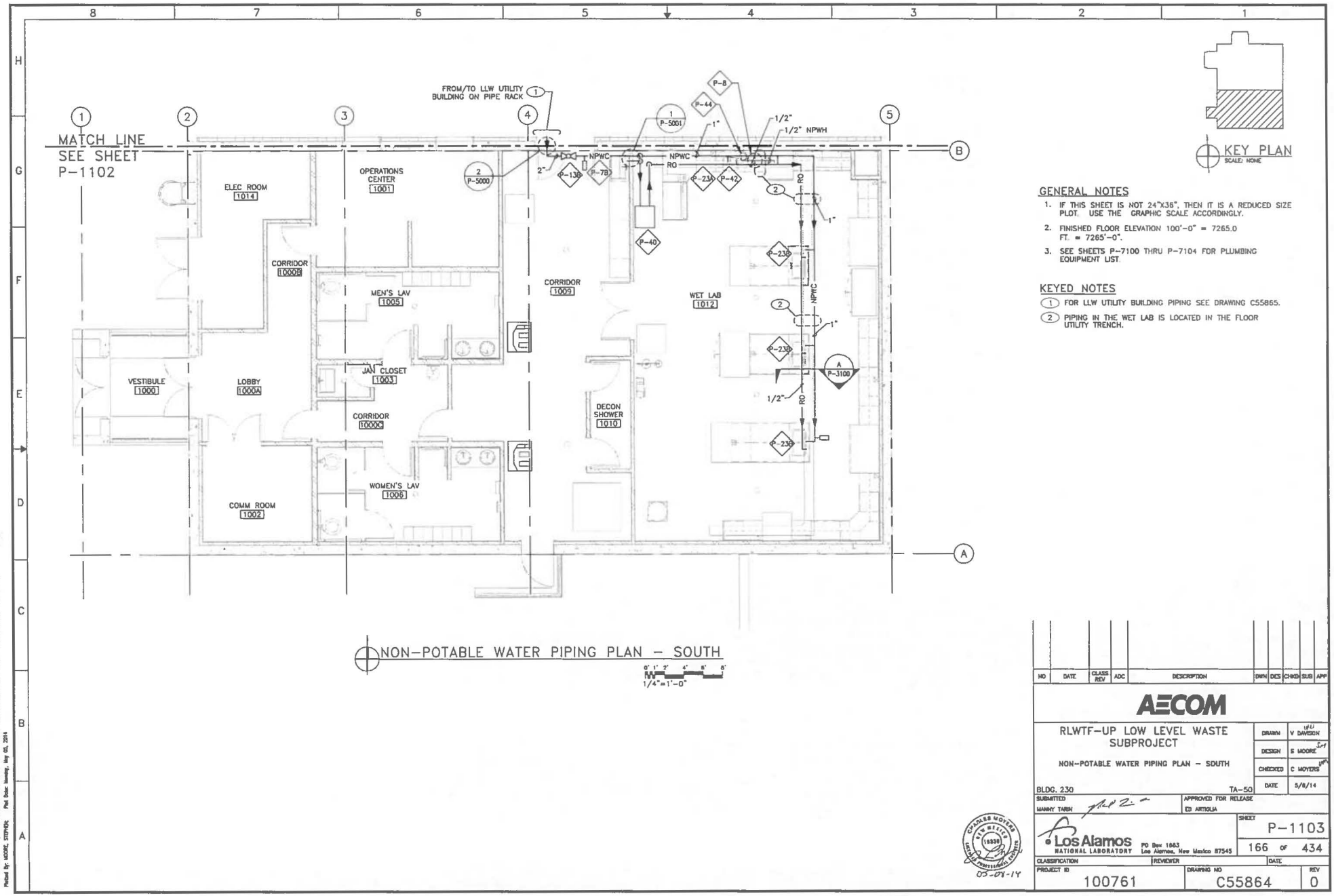

NON-POTABLE WATER PIPING PLAN – SOUTH

1/4"=1'-0"

KEY PLAN
SCALE: NONE

GENERAL NOTES

1. IF THIS SHEET IS NOT 24"X36", THEN IT IS A REDUCED SIZE PLOT. USE THE GRAPHIC SCALE ACCORDINGLY.
2. FINISHED FLOOR ELEVATION 100'-0" = 7265.0 FT. = 7265'-0".
3. SEE SHEETS P-7100 THRU P-7104 FOR PLUMBING EQUIPMENT LIST.

KEYED NOTES

(1) FOR LLW UTILITY BUILDING PIPING SEE DRAWING C55865.

(2) PIPING IN THE WET LAB IS LOCATED IN THE FLOOR UTILITY TRENCH.

NO	DATE	CLASS REV	ADC	DESCRIPTION	DWN	DES	CHKD	SUB	APP

AECOM

RLWTF-UP LOW LEVEL WASTE SUBPROJECT

NON-POTABLE WATER PIPING PLAN – SOUTH

DRAWN	V DAVISON
DESIGN	S MOORE
CHECKED	C MOYERS
DATE	5/8/14

BLDG. 230 TA-50

SUBMITTED MANNY TARIN

APPROVED FOR RELEASE ED ARTIGLIA

Los Alamos NATIONAL LABORATORY PO Box 1663 Los Alamos, New Mexico 87545

SHEET P-1103

166 OF 434

CLASSIFICATION REVIEWER DATE

PROJECT ID 100761

DRAWING NO C55864

REV 0

CHARLES MOYERS NEW MEXICO 16838 REGISTERED PROFESSIONAL ENGINEER

05-07-14

LT2221:
File Location: P:\RLWTF LOW-LEVEL WASTE FACILITY\300 CAD\C55864 MAIN BUILDING\SHEETS\13 PLUMBING\55864-P-1103-R0.DWG
Plotted By: MOORE, STEPHEN Plot Date: Monday, May 05, 2014

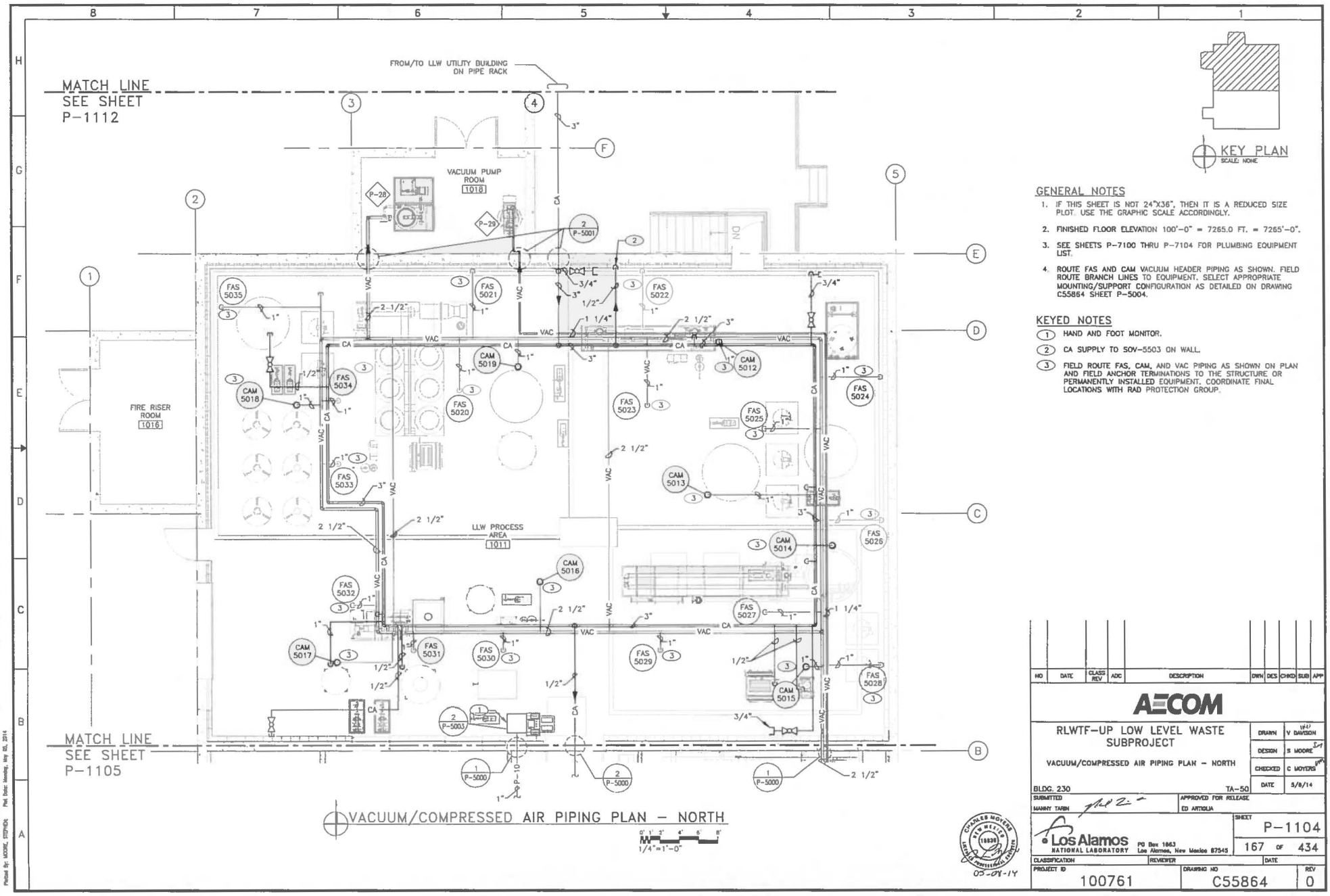

VACUUM/COMPRESSED AIR PIPING PLAN – NORTH

1/4"=1'-0"

KEY PLAN
SCALE: NONE

GENERAL NOTES

1. IF THIS SHEET IS NOT 24"X36", THEN IT IS A REDUCED SIZE PLOT. USE THE GRAPHIC SCALE ACCORDINGLY.
2. FINISHED FLOOR ELEVATION 100'-0" = 7265.0 FT. = 7265'-0".
3. SEE SHEETS P-7100 THRU P-7104 FOR PLUMBING EQUIPMENT LIST.
4. ROUTE FAS AND CAM VACUUM HEADER PIPING AS SHOWN. FIELD ROUTE BRANCH LINES TO EQUIPMENT. SELECT APPROPRIATE MOUNTING/SUPPORT CONFIGURATION AS DETAILED ON DRAWING C55864 SHEET P-5004.

KEYED NOTES

(1) HAND AND FOOT MONITOR.

(2) CA SUPPLY TO SOV-5503 ON WALL.

(3) FIELD ROUTE FAS, CAM, AND VAC PIPING AS SHOWN ON PLAN AND FIELD ANCHOR TERMINATIONS TO THE STRUCTURE OR PERMANENTLY INSTALLED EQUIPMENT. COORDINATE FINAL LOCATIONS WITH RAD PROTECTION GROUP.

NO	DATE	CLASS REV	ADC	DESCRIPTION	DWN	DES	CHKD	SUB	APP

AECOM

RLWTF–UP LOW LEVEL WASTE SUBPROJECT

VACUUM/COMPRESSED AIR PIPING PLAN – NORTH

BLDG. 230 TA-50

DRAWN	V DAVISON
DESIGN	S MOORE
CHECKED	C MOYERS
DATE	5/8/14

SUBMITTED MANNY TARIN — APPROVED FOR RELEASE ED ARTIGLIA

Los Alamos NATIONAL LABORATORY PO Box 1663 Los Alamos, New Mexico 87545

SHEET P-1104

167 OF 434

CLASSIFICATION — REVIEWER — DATE

PROJECT ID 100761 — DRAWING NO C55864 — REV 0

CHARLES MOYERS 10820 REGISTERED PROFESSIONAL ENGINEER 05-07-14

8122218 : 1221 8

File Location: P:\RLWTF LOW-LEVEL WASTE FACILITY\300 CAD\C55864 MAIN BUILDING\SHEETS\13 PLUMBING\55864-P-1104-R0.DWG
Plotted By: MOORE, STEPHEN Plot Date: Monday, May 05, 2014

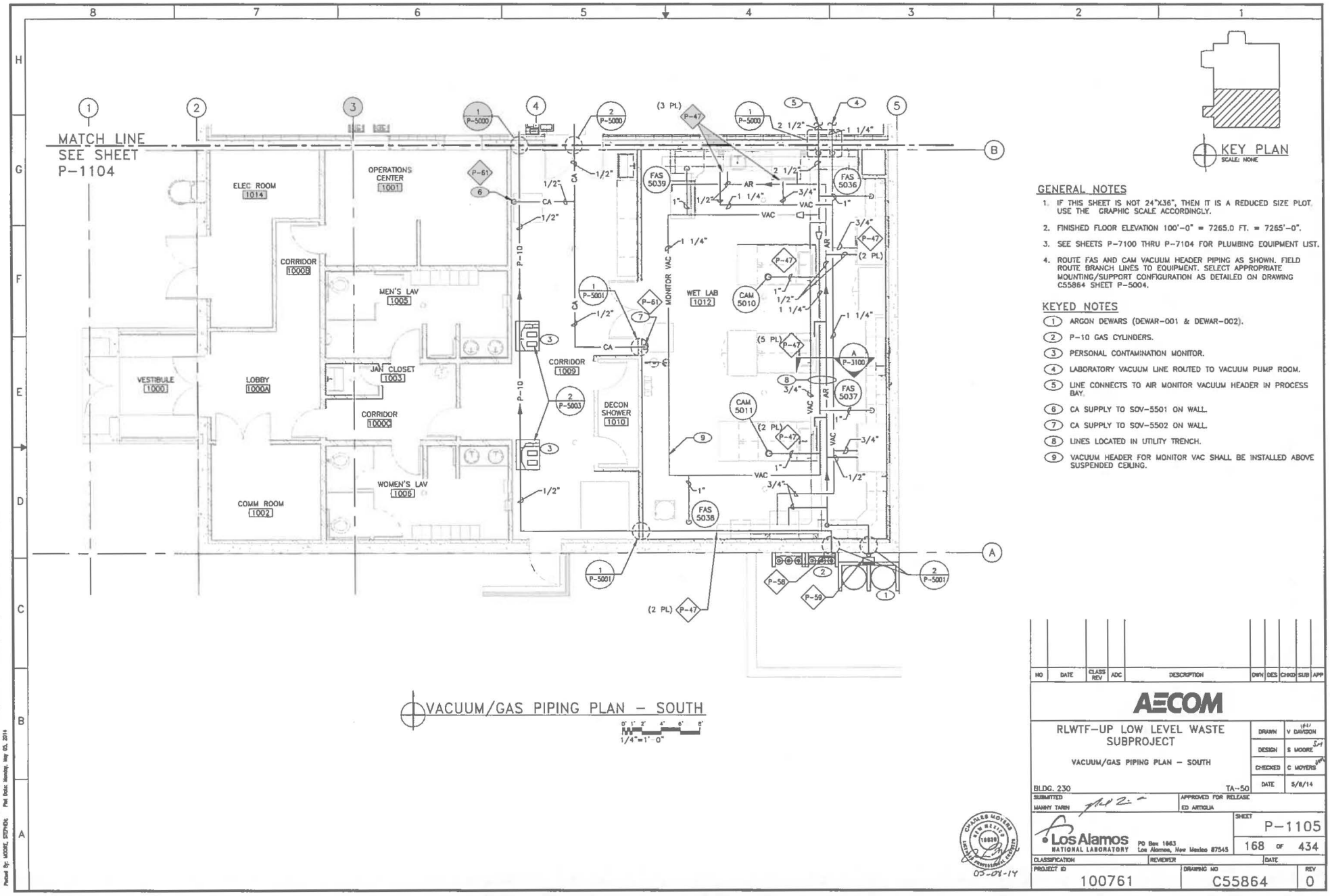

VACUUM/GAS PIPING PLAN – SOUTH

1/4"=1'-0"

KEY PLAN
SCALE: NONE

GENERAL NOTES

1. IF THIS SHEET IS NOT 24"X36", THEN IT IS A REDUCED SIZE PLOT. USE THE GRAPHIC SCALE ACCORDINGLY.
2. FINISHED FLOOR ELEVATION 100'-0" = 7265.0 FT. = 7265'-0".
3. SEE SHEETS P-7100 THRU P-7104 FOR PLUMBING EQUIPMENT LIST.
4. ROUTE FAS AND CAM VACUUM HEADER PIPING AS SHOWN. FIELD ROUTE BRANCH LINES TO EQUIPMENT. SELECT APPROPRIATE MOUNTING/SUPPORT CONFIGURATION AS DETAILED ON DRAWING C55864 SHEET P-5004.

KEYED NOTES

1. ARGON DEWARS (DEWAR-001 & DEWAR-002).
2. P-10 GAS CYLINDERS.
3. PERSONAL CONTAMINATION MONITOR.
4. LABORATORY VACUUM LINE ROUTED TO VACUUM PUMP ROOM.
5. LINE CONNECTS TO AIR MONITOR VACUUM HEADER IN PROCESS BAY.
6. CA SUPPLY TO SOV-5501 ON WALL.
7. CA SUPPLY TO SOV-5502 ON WALL.
8. LINES LOCATED IN UTILITY TRENCH.
9. VACUUM HEADER FOR MONITOR VAC SHALL BE INSTALLED ABOVE SUSPENDED CEILING.

NO	DATE	CLASS REV	ADC	DESCRIPTION	DWN	DES	CHKD	SUB	APP

AECOM

RLWTF-UP LOW LEVEL WASTE SUBPROJECT

VACUUM/GAS PIPING PLAN – SOUTH

DRAWN	V DAVIDSON
DESIGN	S MOORE
CHECKED	C MOYERS
DATE	5/8/14

BLDG. 230 TA-50

SUBMITTED: MANNY TARIN — APPROVED FOR RELEASE: ED ARTIGLIA

Los Alamos NATIONAL LABORATORY — PO Box 1663, Los Alamos, New Mexico 87545

SHEET P-1105

168 OF 434

CLASSIFICATION | REVIEWER | DATE

PROJECT ID: 100761 | DRAWING NO: C55864 | REV: 0

CHARLES MOYERS — NEW MEXICO — 10839 — REGISTERED PROFESSIONAL ENGINEER — 05-09-14

File Location: P:\RLWTF LOW-LEVEL WASTE FACILITY\300 CAD\C55864 MAIN BUILDING\SHEETS\13 PLUMBING\55864-P-1105-R0.DWG
Plotted By: MOORE, STEPHEN Plot Date: Monday, May 05, 2014

: 122119

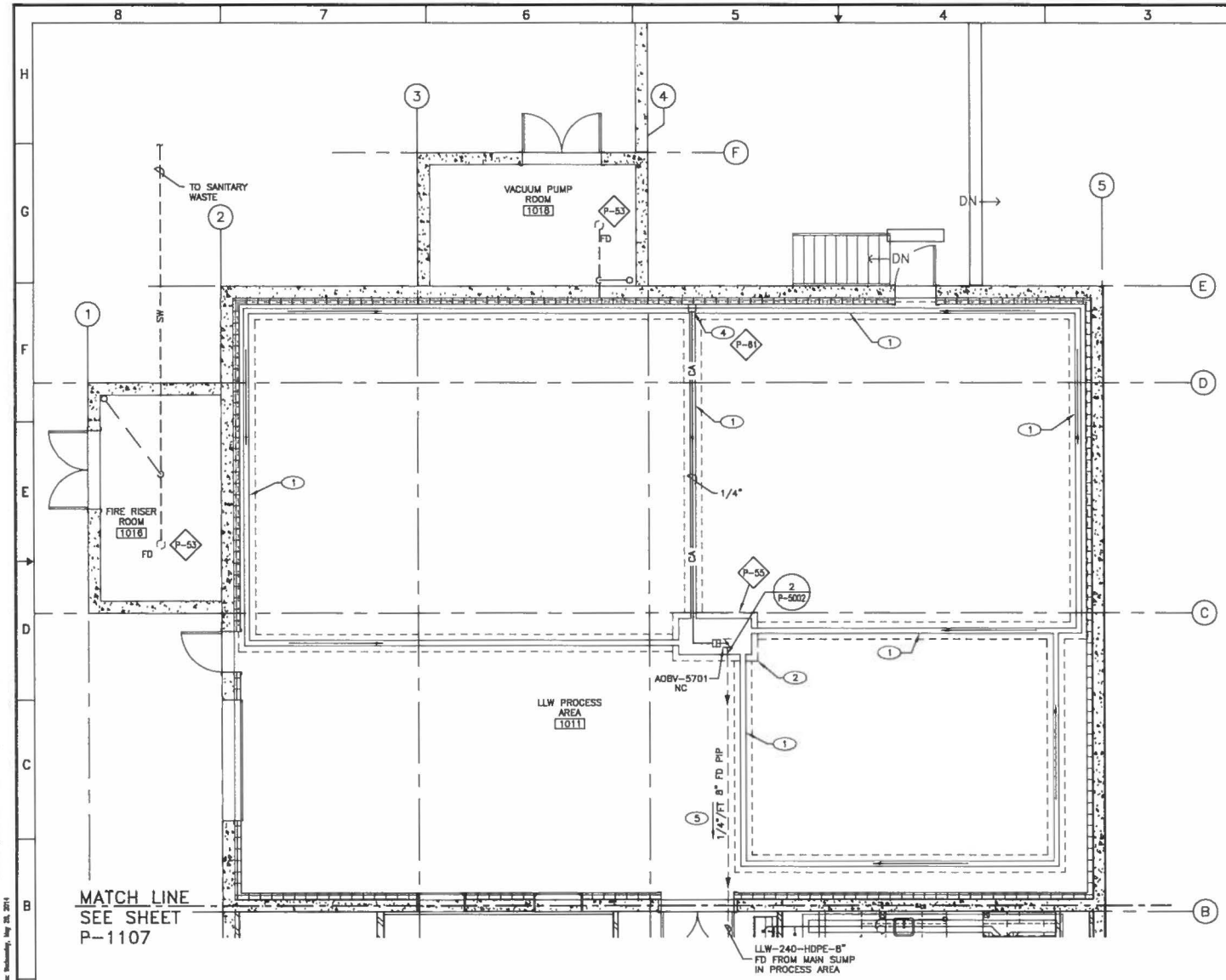

PROCESS DRAIN/VENT PLUMBING PLAN – NORTH

1/4"=1'-0"

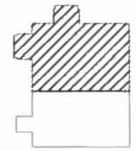

KEY PLAN
SCALE: NONE

GENERAL NOTES

1. IF THIS SHEET IS NOT 24"X36", THEN IT IS A REDUCED SIZE PLOT. USE THE GRAPHIC SCALE ACCORDINGLY.
2. FINISHED FLOOR ELEVATION 100'-0" = 7265.0 FT. = 7265'-0".
3. SEE SHEETS P-7100 THRU P-7104 FOR PLUMBING EQUIPMENT LIST.

KEYED NOTES

1. CONTINUOUS TRENCH DRAIN. REFERENCE TO P-5005 & P-5006.
2. PROCESS DRAIN (DRY) SUMP.
3. NOT USED.
4. SOV-5503 ON WALL. ROUTE 1/4" CA LINE IN DRAINAGE TRENCH TO AOBV-5701 IN SUMP PIT.
5. PROCESS AREA BELOW FLOOR PIPING SHALL BE PIPE IN PIPE.

NO	DATE	CLASS REV	ADC	DESCRIPTION	DWN	DES	CHKD	SUB	APP

AECOM

RLWTF-UP LOW LEVEL WASTE SUBPROJECT

PROCESS DRAIN/VENT PLAN – NORTH

BLDG. 230 TA-50

DRAWN	V DAVISON
DESIGN	S MOORE
CHECKED	C MOYERS
DATE	5/8/14

SUBMITTED: MANNY TARIN

APPROVED FOR RELEASE: ED ARTIGLIA

Los Alamos NATIONAL LABORATORY PO Box 1663 Los Alamos, New Mexico 87545

SHEET P-1106

169 OF 434

CLASSIFICATION | REVIEWER | DATE

PROJECT ID 100761 | DRAWING NO C55864 | REV 0

CHARLES MOYERS NEW MEXICO 18838 LICENSED PROFESSIONAL ENGINEER 05-08-14

File Location: P:_TECHNOLOGY\80239631 - RLWTF\400 STUDIES, DESIGN\460 DESIGN SUBMISSIONS\461 CONCEPT DESIGN\DEL IX_5-6-14 FINAL\DEL IX DRAWINGS\230-LLW TREATMENT BUILDING\BLDG 230 CAD FILES\230-PLUMBING\55864-P-1106-R0.DWG
Plotted By: BROERMAN, DAVIDG Plot Date: Wednesday, May 28, 2014

: 12220

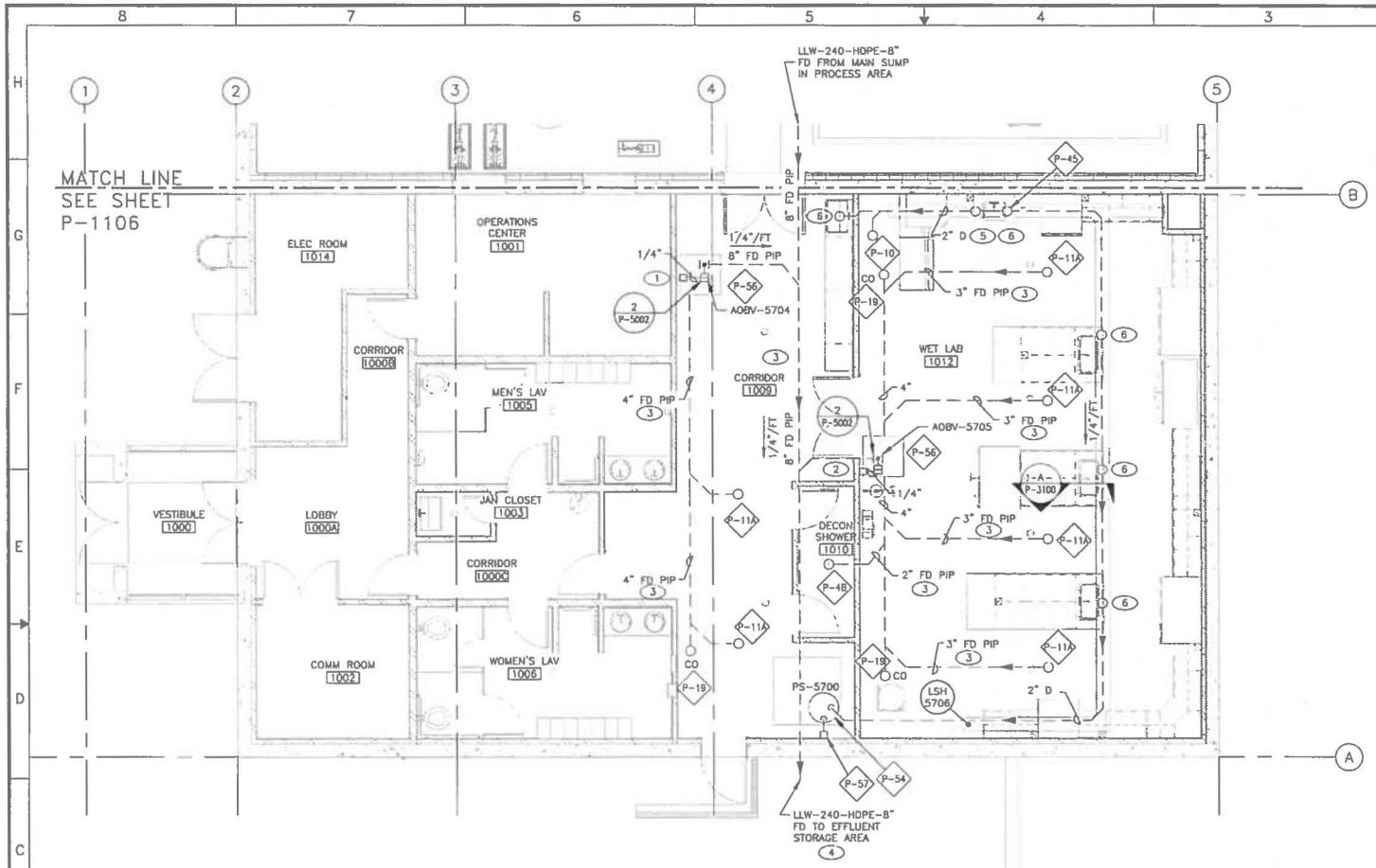

PROCESS DRAIN/VENT PLUMBING PLAN – SOUTH

1/4"=1'-0"

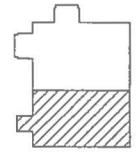

KEY PLAN
SCALE: NONE

GENERAL NOTES

1. IF THIS SHEET IS NOT 24"X36", THEN IT IS A REDUCED SIZE PLOT. USE THE GRAPHIC SCALE ACCORDINGLY.
2. FINISHED FLOOR ELEVATION 100'-0" = 7265.0 FT. = 7265'-0".
3. SEE SHEETS P-7100 THRU P-7104 FOR PLUMBING EQUIPMENT LIST.
4. SINKS AND DISHWASHER PROVIDED WITH LOCAL VACUUM BREAKER ON DRAIN LINE.

KEYED NOTES

1. SOV-5501 ON WALL. ROUTE 1/4" CA LINE TO AOBV-5704 IN SUMP PIT.
2. SOV-5502 ON WALL. ROUTE 1/4" CA LINE TO AOBV-5705 IN SUMP PIT.
3. BELOW FLOOR PIPING SHALL BE PIPE IN PIPE.
4. SEE DRAWING C55867 SHEET D-1400 FOR CONTINUATION.
5. FIELD ROUTE DRAIN IN THE BELOW FLOOR UTILITY TRENCH.
6. PROVIDE CLEAR PVC TRAP.

NO	DATE	CLASS REV	ADC	DESCRIPTION	DWN	DES	CHKD	SUB	APP

AECOM

RLWTF-UP LOW LEVEL WASTE SUBPROJECT

PROCESS DRAIN/VENT PLAN – SOUTH

BLDG. 230 TA-50

DRAWN	V DAVISON
DESIGN	S MOORE
CHECKED	C MOYERS
DATE	5/8/14

SUBMITTED: MANNY TARIN

APPROVED FOR RELEASE: ED ARTIGLIA

Los Alamos NATIONAL LABORATORY PO Box 1663 Los Alamos, New Mexico 87545

SHEET P-1107

170 OF 434

CLASSIFICATION | REVIEWER | DATE

PROJECT ID 100761 | DRAWING NO C55864 | REV 0

CHARLES MOYERS NEW MEXICO 18838 LICENSED PROFESSIONAL ENGINEER

05-08-14

File Location: P:\RLWTF LOW-LEVEL WASTE FACILITY\500 CAD\C55864 MAIN BUILDING\SHEETS\13 PLUMBING\55864-P-1107-R0.DWG
Plotted By: DAVISON, VANESSA; Plot Date: Wednesday, May 07, 2014

12221

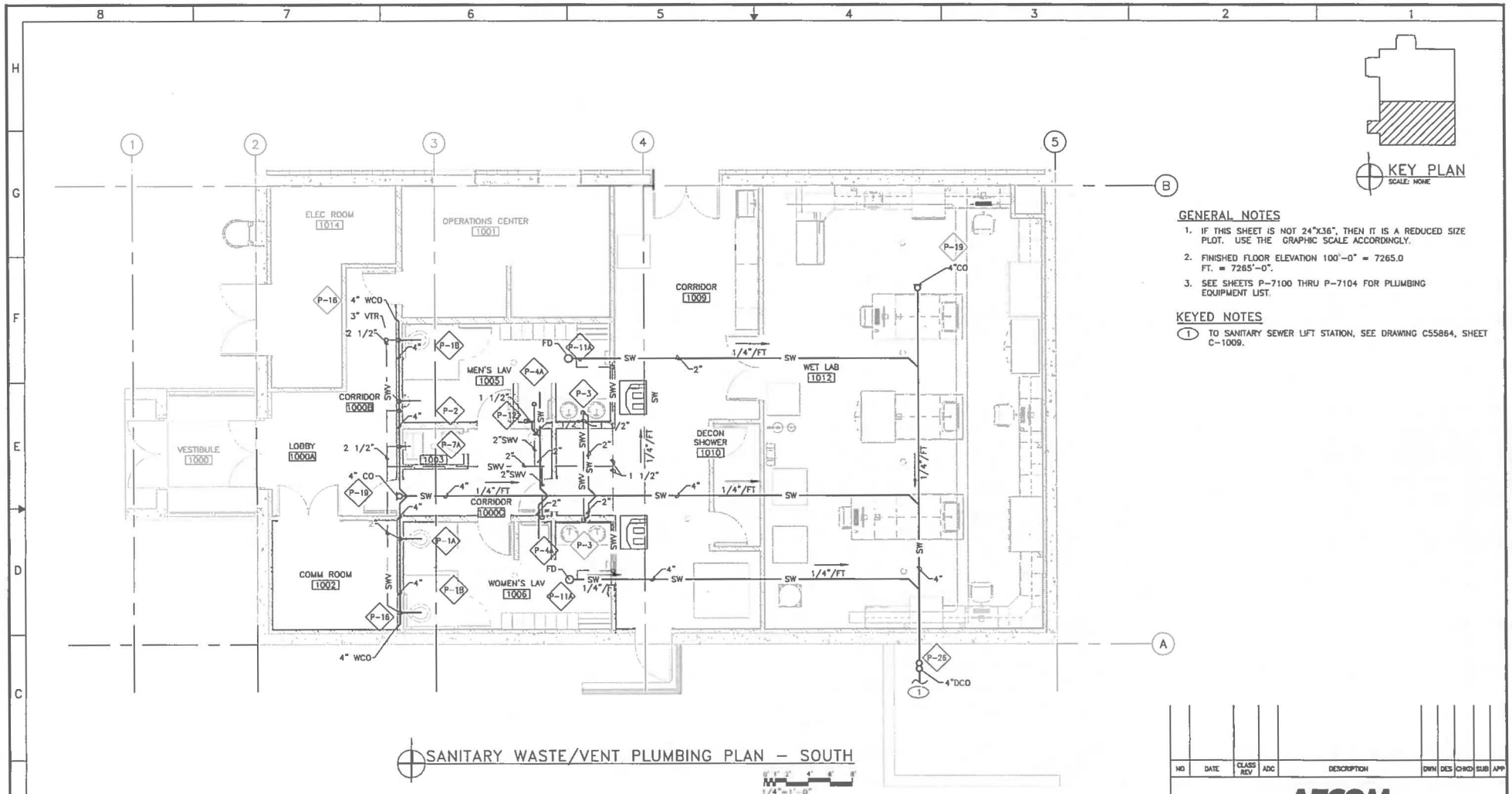

SANITARY WASTE/VENT PLUMBING PLAN – SOUTH

1/4"=1'-0"

KEY PLAN
SCALE: NONE

GENERAL NOTES

1. IF THIS SHEET IS NOT 24"X36", THEN IT IS A REDUCED SIZE PLOT. USE THE GRAPHIC SCALE ACCORDINGLY.
2. FINISHED FLOOR ELEVATION 100'-0" = 7265.0 FT. = 7265'-0".
3. SEE SHEETS P-7100 THRU P-7104 FOR PLUMBING EQUIPMENT LIST.

KEYED NOTES

(1) TO SANITARY SEWER LIFT STATION, SEE DRAWING C55864, SHEET C-1009.

NO	DATE	CLASS REV	ADC	DESCRIPTION	DWN	DES	CHKD	SUB	APP

AECOM

RLWTF-UP LOW LEVEL WASTE SUBPROJECT

SANITARY WASTE/VENT PLUMBING PLAN-SOUTH

DRAWN	V DAVISON
DESIGN	S MOORE
CHECKED	C MOYERS
DATE	5/8/14

BLDG. 230 TA-50

SUBMITTED: MANNY TARIN

APPROVED FOR RELEASE: ED ARTIGLIA

Los Alamos NATIONAL LABORATORY PO Box 1663 Los Alamos, New Mexico 87545

SHEET P-1109

171 OF 434

CLASSIFICATION | REVIEWER | DATE

PROJECT ID 100761 | DRAWING NO C55864 | REV 0

CHARLES MOYERS NEW MEXICO 10838 REGISTERED PROFESSIONAL ENGINEER

05-08-14

22221

File Location: P:\RLWTF LOW-LEVEL WASTE FACILITY\300 CAD\C55864 MAIN BUILDING\SHEETS\13 PLUMBING\55864-P-1109-R0.DWG
Plotted By: MOORE, STEPHEN Plot Date: Monday, May 05, 2014

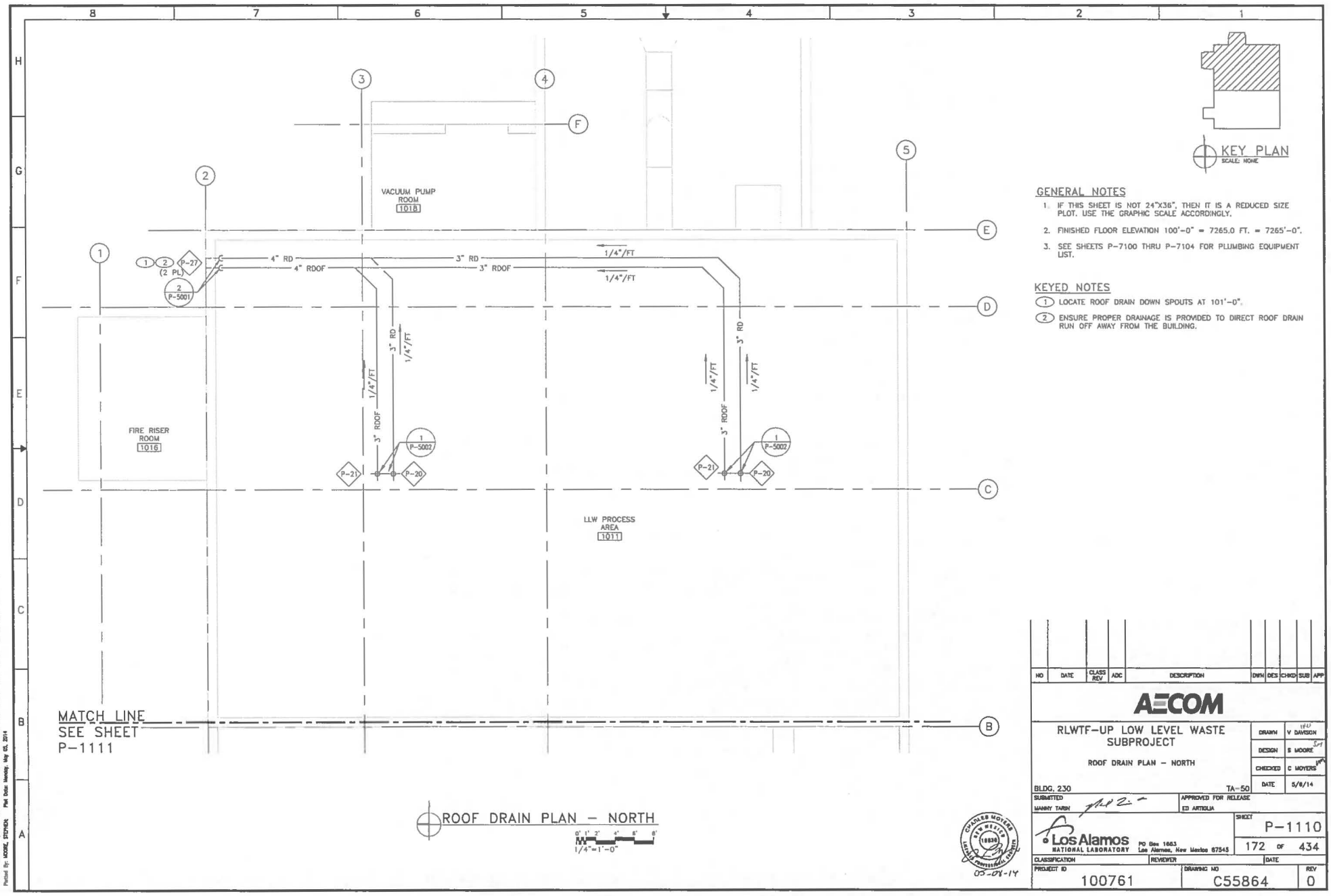

ROOF DRAIN PLAN – NORTH

1/4"=1'-0"

KEY PLAN
SCALE: NONE

GENERAL NOTES

1. IF THIS SHEET IS NOT 24"X36", THEN IT IS A REDUCED SIZE PLOT. USE THE GRAPHIC SCALE ACCORDINGLY.
2. FINISHED FLOOR ELEVATION 100'-0" = 7265.0 FT. = 7265'-0".
3. SEE SHEETS P-7100 THRU P-7104 FOR PLUMBING EQUIPMENT LIST.

KEYED NOTES

(1) LOCATE ROOF DRAIN DOWN SPOUTS AT 101'-0".

(2) ENSURE PROPER DRAINAGE IS PROVIDED TO DIRECT ROOF DRAIN RUN OFF AWAY FROM THE BUILDING.

NO	DATE	CLASS REV	ADC	DESCRIPTION	DWN	DES	CHKD	SUB	APP

AECOM

RLWTF–UP LOW LEVEL WASTE SUBPROJECT

ROOF DRAIN PLAN – NORTH

DRAWN	V DAVISON
DESIGN	S MOORE
CHECKED	C MOYERS
DATE	5/8/14

BLDG. 230 TA–50

SUBMITTED MANNY TARIN — APPROVED FOR RELEASE ED ARTIOLIA

Los Alamos NATIONAL LABORATORY PO Box 1663 Los Alamos, New Mexico 87545

SHEET P–1110

172 OF 434

CLASSIFICATION | REVIEWER | DATE

PROJECT ID 100761 | DRAWING NO C55864 | REV 0

CHARLES MOYERS NEW MEXICO 10836 REGISTERED PROFESSIONAL ENGINEER

05-08-14

E22271 :

File Location: P:\RLWTF LOW-LEVEL WASTE FACILITY\300 CAD\C55864 MAIN BUILDING\SHEETS\13 PLUMBING\55864-P-1110-RD.DWG

Plotted By: MOORE, STEPHEN Plot Date: Monday, May 05, 2014

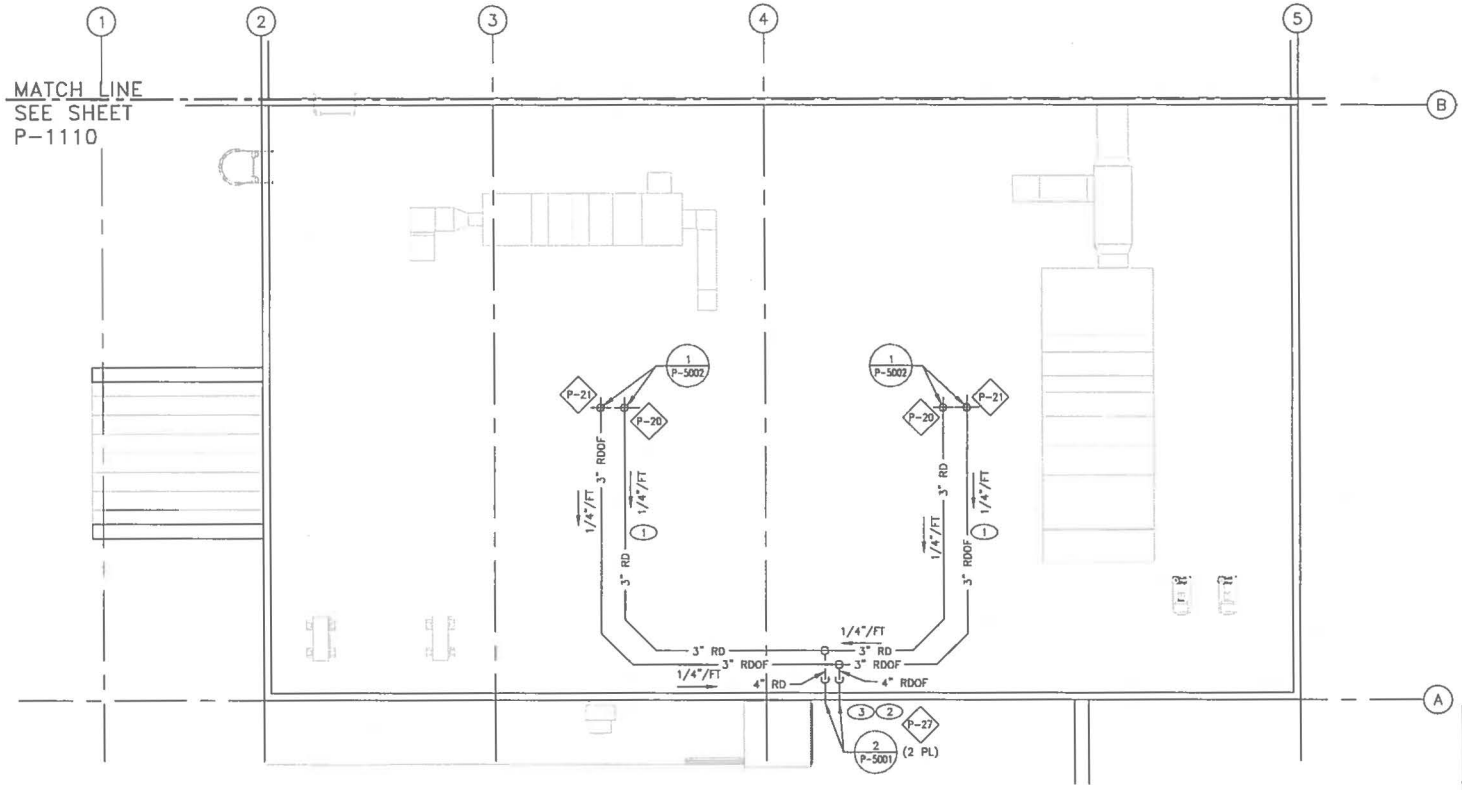

ROOF DRAIN PLAN – SOUTH

1/4"=1'-0"

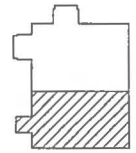

KEY PLAN
SCALE: NONE

GENERAL NOTES

1. IF THIS SHEET IS NOT 24"X36", THEN IT IS A REDUCED SIZE PLOT. USE THE GRAPHIC SCALE ACCORDINGLY.
2. FINISHED FLOOR ELEVATION 100'-0" = 7265.0 FT. = 7265'-0".
3. SEE SHEETS P-7100 THRU P-7104 FOR PLUMBING EQUIPMENT LIST.

KEYED NOTES

1. ROUTE ROOF DRAINS AND ROOF OVERFLOW DRAINS ABOVE CEILING.
2. ENSURE PROPER DRAINAGE IS PROVIDED TO DIRECT ROOF DRAIN RUN OFF AWAY FROM THE BUILDING.
3. LOCATE ROOF DRAIN DOWN SPOUTS AT 93'-0".

NO	DATE	CLASS REV	ADC	DESCRIPTION	DWN	DES	CHKD	SUB	APP

AECOM

RLWTF-UP LOW LEVEL WASTE SUBPROJECT

ROOF DRAIN PLAN – SOUTH

BLDG. 230 TA-50

DRAWN	V DAVISON
DESIGN	S MOORE
CHECKED	C MOYERS
DATE	5/8/14

SUBMITTED: MANNY TARIN

APPROVED FOR RELEASE: ED ARTIGLIA

Los Alamos NATIONAL LABORATORY PO Box 1663 Los Alamos, New Mexico 87545

SHEET P-1111

173 OF 434

CLASSIFICATION | REVIEWER | DATE

PROJECT ID 100761 | DRAWING NO C55864 | REV 0

CHARLES MOYERS NEW MEXICO 16838 LICENSED PROFESSIONAL ENGINEER

05-08-14

File Location: P:\RLWTF LOW-LEVEL WASTE FACILITY\500 CAD\C55864 MAIN BUILDING\SHEETS\13 PLUMBING\55864-P-1111-RD.DWG
Plotted By: MOORE, STEPHEN Plot Date: Monday, May 05, 2014

: 122 4

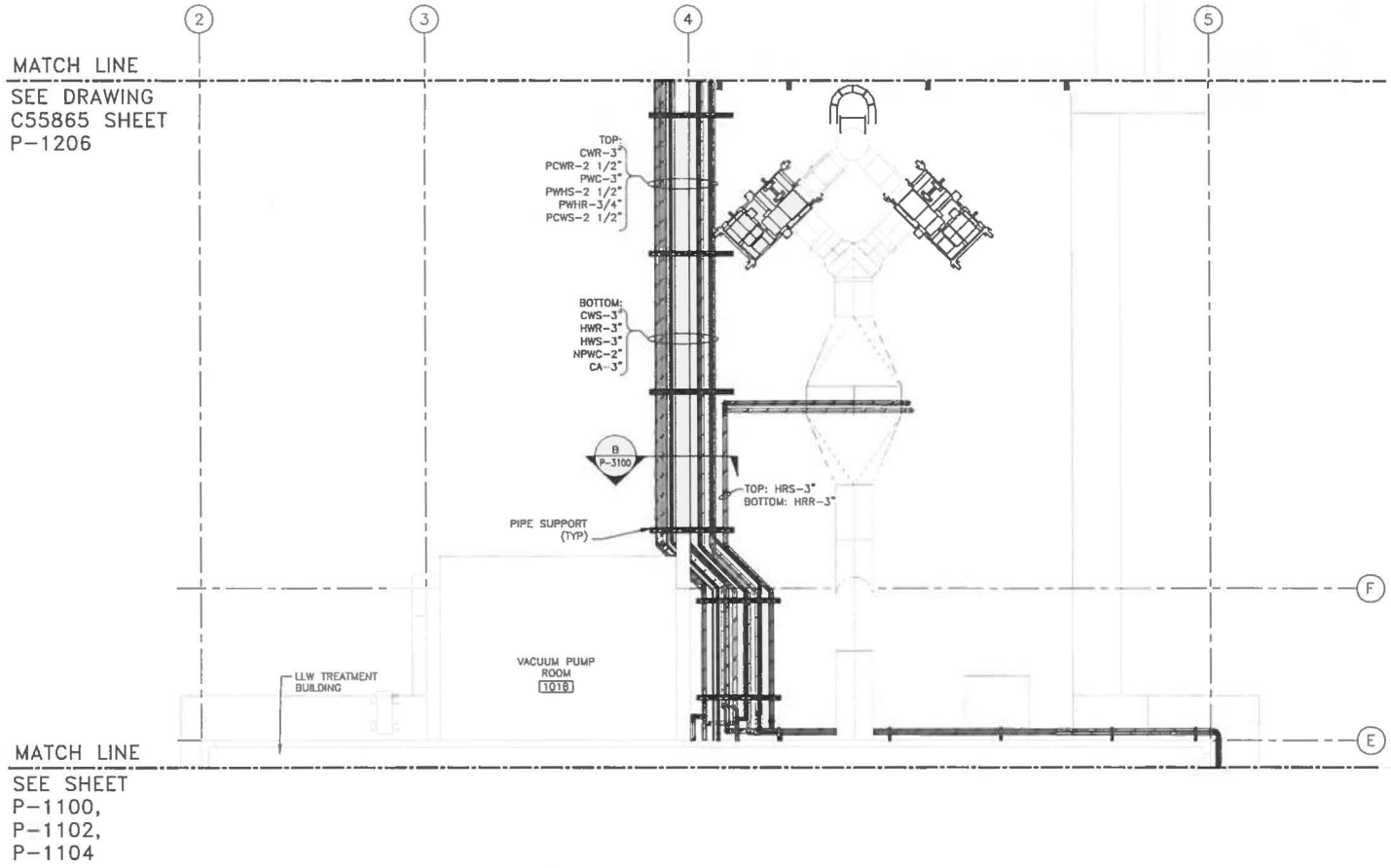

UTILITY PIPING PLAN

1/4"=1'-0"

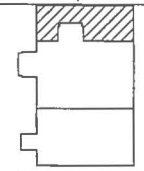

KEY PLAN
SCALE: NONE

GENERAL NOTES

1. IF THIS SHEET IS NOT 24"x 36", THEN IT IS A REDUCED SIZE PLOT. USE GRAPHIC SCALE ACCORDINGLY.

NO	DATE	CLASS REV	ADC	DESCRIPTION	DWN	DES	CHKD	SUB	APP

AECOM

RLWTF-UP LOW LEVEL WASTE SUBPROJECT

UTILITY PIPING PLAN

BLDG. 230 TA-50

DRAWN	V DAVISON
DESIGN	S MOORE
CHECKED	C MOYERS
DATE	5/8/14

SUBMITTED: MANNY TARIN

APPROVED FOR RELEASE: ED ARTIGLIA

Los Alamos NATIONAL LABORATORY PO Box 1663 Los Alamos, New Mexico 87545

SHEET P-1112

174 OF 434

CLASSIFICATION | REVIEWER | DATE

PROJECT ID 100761 | DRAWING NO C55864 | REV 0

05-08-14

File Location: P:\RLWTF LOW-LEVEL WASTE FACILITY\500 CAD\C55864 MAIN BUILDING\SHEETS\13 PLUMBING\55864-P-1112-R0.DWG
Plotted By: MOORE, STEPHEN Plot Date: Monday, May 05, 2014

12225

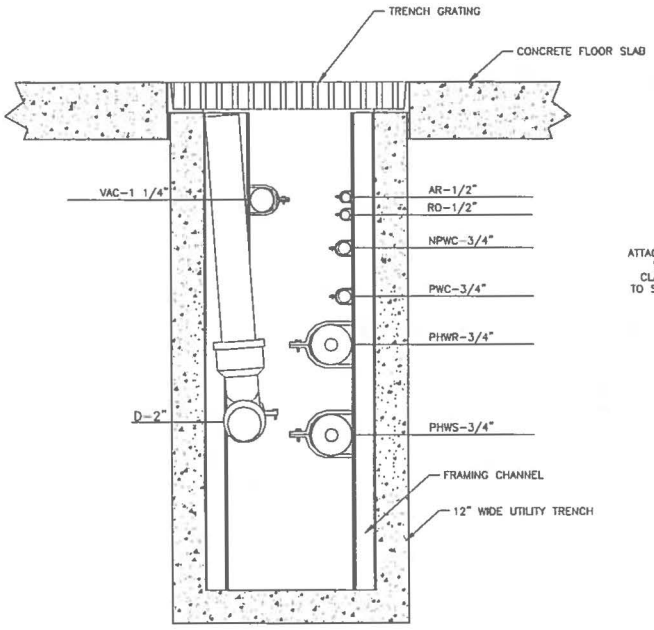

A P-1107 A P-1105 A P-1103 A P-1101 UTILITY TRENCH SECTION

4" 2" 0 2" 4"
1/4"=1"

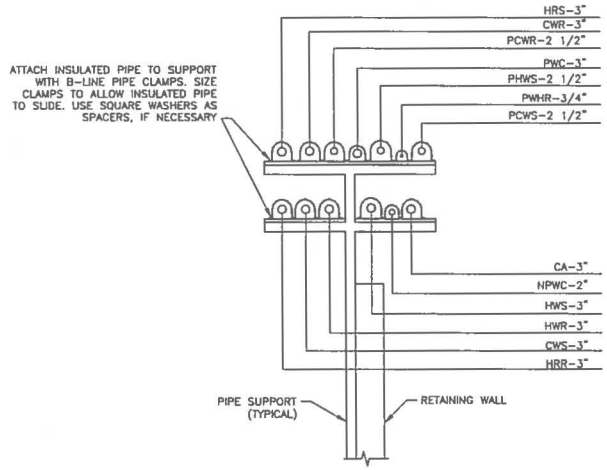

B P-1112 RACK SECTION

2" 1" 0 1" 2"
1/2"=1"

NO	DATE	CLASS REV	ADC	DESCRIPTION	DWN	DES	CHKD	SUB	APP

AECOM

RLWTF-UP LOW LEVEL WASTE SUBPROJECT

SECTIONS

DRAWN	V DAVISON
DESIGN	S MOORE
CHECKED	C MOYERS
DATE	5/8/14

BLDG. 230 TA-50

SUBMITTED MANNY TARIN — APPROVED FOR RELEASE ED ARTIOLA

Los Alamos NATIONAL LABORATORY PO Box 1663 Los Alamos, New Mexico 87545

SHEET P-3100

175 OF 434

CLASSIFICATION | REVIEWER | DATE

PROJECT ID 100761 | DRAWING NO C55864 | REV 0

CHARLES MOYERS NEW MEXICO 16839 REGISTERED PROFESSIONAL ENGINEER
05-07-14

92221 :

File Location: P:\RLWTF LLW-LEVEL WASTE FACILITY\000 CAD\C55864 MAIN BUILDING\SHEETS\13 PLUMBING\C55864 P-3100 RELEASE
Plotted By: MOORE, STEPHEN Plot Date: Monday, May 05, 2014

SYSTEM NO C-AJ-1374

F RATING – 2 HR
T RATINGS – 0 AND 1 HR (SEE ITEMS 2 AND 4)
L RATING AT AMBIENT – 4 CFM/SQ FT
L RATING AT 400 F – LESS THAN 1 CFM/SQ FT

(1) FLOOR OR WALL ASSEMBLY – MIN 4–1/2 IN. (114 MM) THICK REINFORCED LIGHTWEIGHT OR NORMAL WEIGHT (100–150 PCF OR 1600–2400 KG/M3) CONCRETE.

(1A) METALLIC SLEEVE – NOM 11 IN. (279 MM) DIAMETER (OR SMALLER) MIN .060 IN. (OR HEAVIER) STEEL SLEEVE CAST OR GROUTED INTO FLOOR OR WALL ASSEMBLY, FLUSH WITH FLOOR OR WALL SURFACES.

(2) THROUGH PENETRANTS – ONE METALLIC PIPE, CONDUIT OR TUBING TO BE CENTERED WITHIN THE FIRESTOP SYSTEM. THE NOMINAL ANNULAR SPACE BETWEEN THE PIPE, CONDUIT OR TUBING AND THE PERIPHERY OF THE OPENING SHALL BE MIN 1/2 IN. TO A MAX 2–7/16 IN. PIPE, CONDUIT OR TUBING TO BE RIGIDLY SUPPORTED ON BOTH SIDES OF FLOOR OR WALL ASSEMBLY. THE FOLLOWING TYPES AND SIZES OF METALLIC PIPES, CONDUITS OR TUBING MAY BE USED:

A. STEEL PIPE – NOM 6 IN. (152 MM) DIAMETER (OR SMALLER) SCHEDULE 10 (OR HEAVIER) STEEL PIPE.
B. IRON PIPE – NOM 6 IN. (152 MM) DIAMETER (OR SMALLER) CAST OR DUCTILE IRON PIPE.
C. CONDUIT – NOM 4 IN. (102 MM) DIAMETER (OR SMALLER) STEEL ELECTRICAL METALLIC TUBING OR NOMINAL 6 IN. DIAMETER RIGID STEEL CONDUIT.
D. COPPER TUBING – NOM 6 IN. (152 MM) DIAMETER (OR SMALLER) TYPE L (OR HEAVIER) COPPER TUBING.
E. COPPER PIPE – NOM 6 IN. (152 MM) DIAMETER (OR SMALLER) REGULAR (OR HEAVIER) COPPER PIPE.

THE F RATING OF THE FIRESTOP SYSTEM IS DEPENDENT UPON THE ANNULAR SPACE WITHIN THE FIRESTOP SYSTEM. IF THE ANNULAR SPACE WITHIN THE FIRESTOP SYSTEM IS 1–3/16 IN. (30 MM) OR LESS, THE F RATING IS 2 HR. IF THE ANNULAR SPACE WITHIN THE FIRESTOP SYSTEM IS GREATER THAN 1–3/16 IN. (30 MM), THE F RATING IS 1–1/2 HR.

(3) FIRESTOP DEVICE/SPECIFICATION* – THE FIRESTOP DEVICE CONSISTS OF INTUMESCENT RUBBER PLUGS, STEEL PLATES AND STEEL BOLTS SIZED WITHIN THE NOMINAL ANNULAR SPACE OF THE FIRESTOP SYSTEM. THE DEVICE TO BE WRAPPED AROUND THE OUTER CIRCUMFERENCE OF THE PENETRANT AND INSTALLED TO COMPLETELY SEAL THE ANNULAR SPACE WITHIN THE FIRESTOP SYSTEM IN ACCORDANCE WITH THE ACCOMPANYING INSTALLATION INSTRUCTIONS. IN FLOORS, DEVICE TO BE INSTALLED WITHIN OPENING IN SUCH A MANNER THAT THE DEVICE TO BE PRECEDED A 1/2 IN. (13 MM) FROM THE BOTTOM SURFACE OF THE FLOOR. FOR WALLS, ONE DEVICE TO BE CENTERED WITHIN THE WALL.

*BEARING THE UL CLASSIFICATION MARKING.

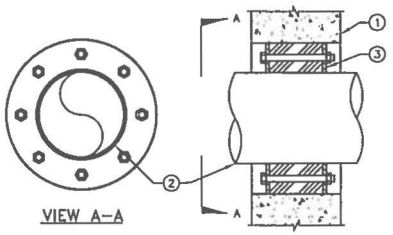

VIEW A–A

SECTION VIEW

1 P-1104 1 P-1105 FIRESTOP DETAIL
SCALE: NONE

SYSTEM NO. W-J-8051

ANSI/UL1479 (ASTM E814)
F RATING –2 HR
T RATING – 0 HR
L RATING AT AMBIENT – 5 CFM/SQ FT (SEE ITEM 6B)
L RATING AT 400 F – 2 CFM/SQ FT (SEE ITEM 6B)

SYSTEM TESTED WITH A PRESSURE DIFFERENTIAL OF 2.5 PA BETWEEN THE EXPOSED AND THE UNEXPOSED SURFACES WITH THE HIGHER PRESSURE ON THE EXPOSED SIDE.

(1) WALL ASSEMBLY – MIN 6 IN. (152 MM) THICK REINFORCED LIGHTWEIGHT OR NORMAL WEIGHT (100–150 PCF OR 1600–2400 KG/M3) CONCRETE. WALL MAY ALSO BE CONSTRUCTED OF ANY UL CLASSIFIED CONCRETE BLOCKS*. MAXIMUM AREA OF OPENING 1152 IN2 (7432 CM2) WITH MAXIMUM DIMENSION OF 48 IN. (1219 MM).

(2) METALLIC PENETRANTS – ONE OR MORE METAL PIPES, CONDUITS OR TUBING MAY BE INSTALLED WITHIN THE THROUGH OPENING. THE SPACE BETWEEN PIPES, CONDUITS OR TUBING SHALL BE MIN 1 IN. (25 MM) TO MAX 26 IN. (660 MM). THE SPACE BETWEEN PIPES, CONDUITS OR TUBING AND PERIPHERY OF OPENING SHALL BE MIN 0 IN. (POINT CONTACT) TO MAX 26 IN. (660 MM). PIPE, CONDUIT OR TUBING TO BE RIGIDLY SUPPORTED ON BOTH SIDES OF WALL ASSEMBLY. THE FOLLOWING TYPES AND SIZES OF METALLIC PIPES, CONDUITS OR TUBING MAY BE USED:

A. STEEL PIPE – NOM 6 IN. (152 MM) DIAM (OR SMALLER) SCHEDULE 5 (OR HEAVIER) STEEL PIPE.
B. IRON PIPE – NOM 6 IN. (152 MM) DIAM (OR SMALLER) CAST OR DUCTILE IRON PIPE.
C. CONDUIT – NOM 6 IN. (152 MM) DIAM (OR SMALLER) RIGID STEEL CONDUIT, NOM 4 IN. (102 MM) DIAM (OR SMALLER) ELECTRICAL METALLIC TUBING (EMT) OR NOM 1 IN. (25 MM) DIAM (OR SMALLER) FLEXIBLE STEEL CONDUIT.
D. COPPER PIPE OR TUBE – NOM 4 IN. (102 MM) DIAM (OR SMALLER) REGULAR (OR HEAVIER) COPPER PIPE OR TYPE L (OR HEAVIER) COPPER TUBE.

(3) PIPE INSULATION – (OPTIONAL) – PIPE INSULATION MAY BE INSTALLED ON ONE OR MORE OF THE METALLIC PIPES OR TUBES (ITEMS 2A, 2B AND 2D). WHEN PIPE INSULATION IS USED, MIN SPACE BETWEEN INSULATED METALLIC PENETRANT AND BARE METALLIC PIPES, CONDUITS AND TUBING SHALL BE MIN 1–1/2 IN. (38 MM) AND MIN SPACE TO PERIPHERY OF OPENING SHALL BE 1 IN. (25 MM). THE FOLLOWING TYPES OF PIPE INSULATIONS MAY BE USED:

A. PIPE AND EQUIPMENT COVERING MATERIALS* – MAX 1–1/2 IN. (38 MM) THICK HOLLOW CYLINDRICAL HEAVY DENSITY (MIN 3.5 PCF OR 56 KG/M3 GLASS FIBER UNITS JACKETED ON THE OUTSIDE WITH AN ALL SERVICE JACKET. LONGITUDINAL JOINTS SEALED WITH METAL FASTENERS OR FACTORY-APPLIED SELF-SEALING LAP TAPE. TRANSVERSE JOINTS SECURED WITH METAL FASTENERS OR WITH BUTT TAPE SUPPLIED WITH THE PRODUCT.
SEE PIPE AND EQUIPMENT COVERING MATERIALS (BRGU) CATEGORY IN THE BUILDING MATERIALS DIRECTORY FOR NAMES OF MANUFACTURERS. ANY PIPE COVERING MEETING THE ABOVE SPECIFICATIONS AND BEARING THE UL CLASSIFICATION MARKING WITH A FLAME SPREAD INDEX OF 25 OR LESS AND A SMOKE DEVELOPED INDEX OF 50 OR LESS MAY BE USED.
B. PIPE AND EQUIPMENT COVERING MATERIALS* – MAX 1–1/2 OR 2 IN. (38 OR 51 MM) THICK HOLLOW CYLINDRICAL CALCIUM SILICATE, MIN 10 OR 14 PCF (160 OR 224 KG/M3 RESPECTIVELY, UNITS SIZED TO THE OUTSIDE DIAM OF THE PIPE OR TUBE. PIPE INSULATION SECURED WITH STAINLESS STEEL BANDS OR WITH MIN NO. 18 SWG STAINLESS STEEL WIRE SPACED MAX 6 IN. (152 MM) FROM EACH FACE OF WALL AND SPACED MAX 12 IN. (305 MM) OC.
C. TUBE INSULATION–PLASTICS+++ – MAX 3/4 IN. (19 MM) THICK ACRYLONITRILE BUTADIENE/POLYVINYL CHLORIDE (AB/PVC) FLEXIBLE FOAM FURNISHED IN THE FOARM OF TUBING. THIS PIPE INSULATION MAY BE INSTALLED ON METALLIC PIPES OR TUBES (ITEMS 2A, 2B AND 2D) NOT EXCEEDING NOM 2 IN. (51 MM) DIAM.
SEE PLASTICS+++ (QMFZ2) CATEGORY IN THE PLASTICS RECOGNIZED COMPONENT DIRECTORY FOR NAMES OF MANUFACTURERS. ANY RECOGNIZED COMPONENT TUBE INSULATION MATERIAL MEETING THE ABOVE SPECIFICATIONS AND HAVING A UL 94 FLAMMABILITY CLASSIFICATION OF 94–5VA MAY BE USED.

CONTINUED THIS SHEET

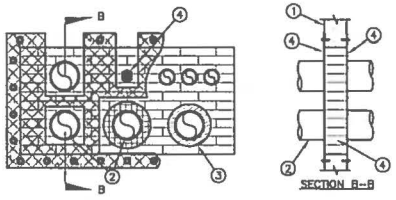

2 P-1101 2 P-1102 2 P-1103 2 P-1104 2 P-1105 FIRESTOP DETAIL
SCALE: NONE

CONTINUED THIS SHEET

(4) FIRESTOP SYSTEM – THE FIRESTOP SYSTEM SHALL CONSIST OF THE FOLLOWING:

A. FILL, VOID OR CAVITY MATERIAL*–FIRE BLOCKS – FIRE BLOCK INSTALLED WITH 5 IN. (127 MM) DIMENSION PROJECTING THROUGH AND CENTERED IN OPENING. BLOCKS TO BE FIRMLY PACKED TO FILL OPENING AND MAY OR MAY NOT BE CUT FLUSH WITH BOTH SURFACES OF WALL. IN CONCRETE BLOCK WALLS, FIRE BLOCK TO FILL ENTIRE THICKNESS OF WALL OPENING UNLESS WALL IS SOLID FILLED.
HILTI CONSTRUCTION CHEMICALS, DIV OF HILTI INC – CFS–BL FIRESTOP BLOCK

B. FILL, VOID OR CAVITY MATERIAL* – FILL MATERIAL TO BE FORCED INTO INTERSTICES OF CABLES, AND IN ANY VOIDS/OPENINGS BETWEEN BLOCKS, AROUND PENETRANTS, AND BETWEEN BLOCKS AND PERIPHERY OF OPENING TO THE MAXIMUM EXTENT POSSIBLE ON BOTH SURFACES OF WALL.
HILTI CONSTRUCTION CHEMICALS, DIV OF HILTI INC – FS–ONE SEALANT, CP618 FIRESTOP PUTTY STICK OR CP 620 FIRE FOAM
(NOTE: L RATINGS APPLY ONLY WHEN FS–ONE SEALANT IS USED.)

C. WIRE MESH – WHEN THE ANNULAR SPACE EXCEEDS 12 IN. (305 MM) BETWEEN PENETRANTS AND/OR TO THE PERIPHERY OF THE OPENING, MAX 2 BY 2 IN. (51 BY 51 MM) WIRE FENCING SHALL BE USED TO KEEP THE BLOCKS IN PLACE. THE WIRE FENCING SHALL BE FABRICATED FROM MIN NO. 18 SWG (0.060 IN. OR 1.5 MM) GALV STEEL WIRE. THE WIRE IS CUT TO FIT WITHIN MAX 2 IN. (25 MM) OF THE PENETRATING ITEM WITH A MIN 3 IN. (76 MM) LAP BEYOND THE PERIPHERY OF THE OPENING. WIRE FENCING SECURED TO BOTH SURFACES OF WALL BY MEANS OF 1/4 IN. (6 MM) DIAM BY 1 IN. (25 MM) LONG STEEL CONCRETE ANCHORS AND 1/4 IN. (6 MM) BY 1–1/2 IN. (38 MM) DIAM FENDER WASHERS SPACED MAX 8 IN. (203 MM) OC. THE JOINTS WITHIN THE WIRE MESH SHALL OVERLAP A MIN OF 2 IN. (51 MM) AND BE SECURED TOGETHER BY MEANS OF NO. 18 SWG STEEL WIRE SPACED 8 IN. (203 MM) OC.

C1. WIRE MESH – (NOT SHOWN, ALTERNATE TO ITEM 6C) – WHEN THE ANNULAR SPACE EXCEEDS 12 IN. (305 MM) BETWEEN PENETRANTS AND/OR TO THE PERIPHERY OF THE OPENING, MAX 1 IN. (25 MM) HEXAGONAL WIRE FENCING SHALL BE USED TO KEEP THE BLOCKS IN PLACE. THE WIRE FENCING SHALL BE FABRICATED FROM NO 20 SWG (0.036 IN. OR 0.9 MM) OR HEAVIER GALV STEEL WIRE. THE WIRE IS CUT TO FIT WITHIN MAX 2 IN. (25 MM) OF THE PENETRATING ITEM WITH A MIN 3 IN. (76 MM) LAP BEYOND THE PERIPHERY OF THE OPENING. WIRE FENCING SECURED TO BOTH SURFACES OF WALL BY MEANS OF 1/4 IN. (6 MM) DIAM BY 1 IN. (25 MM) LONG STEEL CONCRETE ANCHORS AND 1/4 IN. (6 MM) BY 1–1/2 IN. (38 MM) DIAM FENDER WASHERS SPACED MAX 8 IN. (203 MM) OC. THE JOINTS WITHIN THE WIRE MESH SHALL OVERLAP A MIN OF 2 IN. (51 MM) AND BE SECURED TOGETHER BY MEANS OF NO. 18 SWG STEEL WIRE SPACED 8 IN. (203 MM) OC.

D. FIRESTOP DEVICE* – FIRESTOP COLLAR – (NOT SHOWN) – FIRESTOP COLLAR SIZED TO DIAM OF PENETRANT SHALL BE WRAPPED AROUND THE OUTER CIRCUMFERENCE OF THE PIPE AND INSTALLED IN ACCORDANCE WITH THE ACCOMPANYING INSTALLATION INSTRUCTIONS. COLLAR TO BE INSTALLED AND LATCHED AROUND THE PIPE AND SECURED ON BOTH SIDES OF THE WALL USING THE ANCHOR HOOKS PROVIDED WITH THE COLLAR. THE COLLARS ARE TO BE SECURED TOGETHER THROUGH THE OPENING WITH ¼ IN.(6 MM) DIAM THREADED STEEL ROD AND WASHERS AND BOLTS.
HILTI CONSTRUCTION CHEMICALS, DIV OF HILTI INC – CP 643N

E. FILL, VOID OR CAVITY MATERIAL* – WRAP STRIP – (NOT SHOWN) – NOM 3/16 IN. (4.8 MM) THICK BY 1–3/4 IN. (45 MM) WIDE INTUMESCENT WRAP STRIP. TWO LAYERS OF WRAP STRIP ARE CONTINUOUSLY WRAPPED AROUND THE PIPE AND HELD IN PLACE WITH TAPE. THE WRAP STRIP IS TO BE INSTALLED FLUSH WITH BOTH ENDS OF STEEL SLEEVE.
HILTI CONSTRUCTION CHEMICALS, DIV OF HILTI INC – HILTI CP 648E/1–3/4 WRAP STRIP

F. STEEL SLEEVE – (NOT SHOWN) – CYLINDRICAL SLEEVE FABRICATED FROM MIN 30 GA 0.016 IN. (0.41 MM) THICK GALV SHEET STEEL AND HAVING A MIN 2 IN. (51 MM) LAP ALONG THE LONGITUDINAL SEAM. SLEEVE TO EXTEND 2 IN. BEYOND EACH SURFACE OF WALL. THE SLEEVE SHALL BE COMPRESSED AROUND THE PIPE (ITEM 3) AND WRAP STRIP (ITEM 6E) AND SECURED TOGETHER WITH 2 NO 8 SHEET METAL SCREWS ON EACH END OF SLEEVE.
HILTI CONSTRUCTION CHEMICALS, DIV OF HILTI INC – HILTI CP 648E/1–3/4 WRAP STRIP

*BEARING THE UL CLASSIFICATION MARK
+ BEARING THE UL LISTING MARK
+++ BEARING THE UL RECOGNIZED COMPONENT MARK

CHARLES MOYERS NEW MEXICO 10838 LICENSED PROFESSIONAL ENGINEER
05-09-14

NO	DATE	CLASS REV	ADC	DESCRIPTION	DRWN	DES	CHKD	SUB	APP

AECOM

RLWTF–UP LOW LEVEL WASTE SUBPROJECT

FIRE STOPPING DETAILS

DRAWN	V DAVISON	5/8/14
DESIGN	S MOORE	5/8/14
CHECKED	C MOYERS	5/8/14
DATE	5/8/14	

BLDG. 230 TA-50

SUBMITTED MANNY TARIN
APPROVED FOR RELEASE ED ARTIOLA

Los Alamos NATIONAL LABORATORY PO Box 1663 Los Alamos, New Mexico 87545

SHEET P-5000
176 OF 434

CLASSIFICATION | REVIEWER | DATE

PROJECT ID 100761
DRAWING NO C55864
REV 0

File Location: P:_TECHNOLOGY\85238831 - RLWTF\450 STUDIES, DESIGN\480 DESIGN SUBMISSIONS\481 CONCEPT DESIGN\DEL RL3-4-14 FINAL\DEL RL DRAWINGS\230-LLW TREATMENT BUILDING\CAD FILES\230-PLUMBING\C55864-P-5000-RL0.DWG
Plotted By: BROOKINS, EMILEE; Plot Date: Friday, May 16, 2014

122271

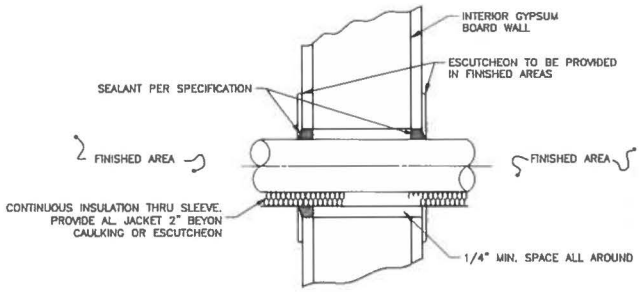

SECTION VIEW

1 P-1101 1 P-1103 1 P-1105 INTERIOR WALL PIPE PENETRATION DETAIL

SCALE: NONE

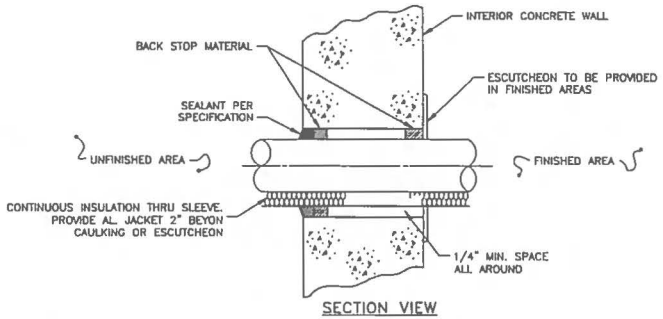

SECTION VIEW

2 P-1104 2 P-1100 2 P-1101 2 P-1102 2 P-1105 2 P-1111 2 P-1110 CONCRETE WALL PIPE PENETRATION DETAIL

SCALE: NONE

NO	DATE	CLASS REV	ADC	DESCRIPTION	DWN	DES	CHKD	SUB	APP

AECOM

RLWTF-UP LOW LEVEL WASTE SUBPROJECT

DETAILS

BLDG. 230 TA-50

SUBMITTED MANNY TARIN

APPROVED FOR RELEASE ED ARTIGLIA

Los Alamos NATIONAL LABORATORY PO Box 1663 Los Alamos, New Mexico 87545

DRAWN	V DAVISON
DESIGN	S MOORE
CHECKED	C MOYERS
DATE	5/8/14
SHEET	P-5001
	177 OF 434
CLASSIFICATION	REVIEWER / DATE
PROJECT ID	100761
DRAWING NO	C55864
REV	0

CHARLES MOYERS NEW MEXICO 18939 REGISTERED PROFESSIONAL ENGINEER

05-08-14

File Location: P:\RLWTF LOW-LEVEL WASTE FACILITY\300 CAD\C55864 MAIN BUILDING\SHEETS\13 PLUMBING\55864-P-5001-R0.DWG
Plotted By: MOORE, STEPHEN Plot Date: Monday, May 05, 2014

12228 : 12228

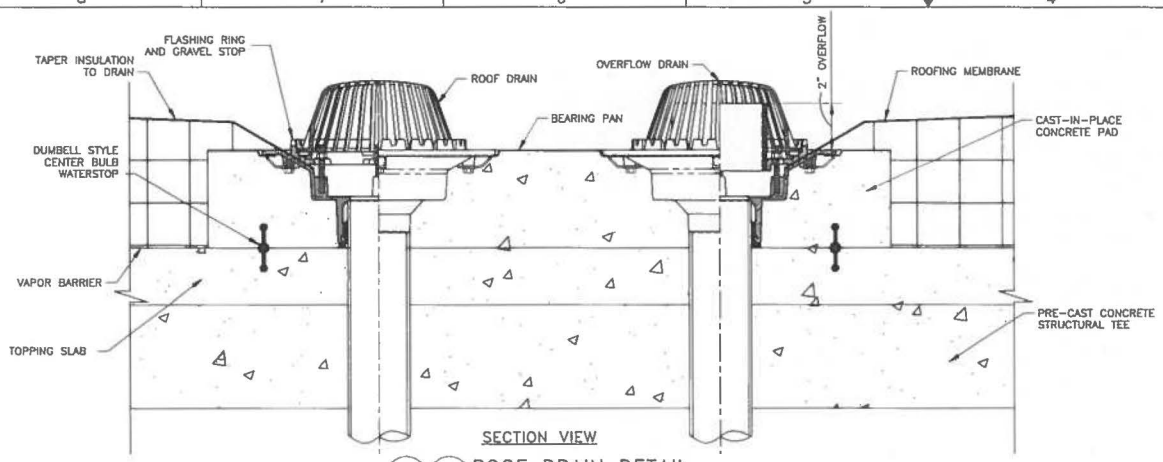

1 P-1110 / 1 P-1111 ROOF DRAIN DETAIL
SCALE: NONE

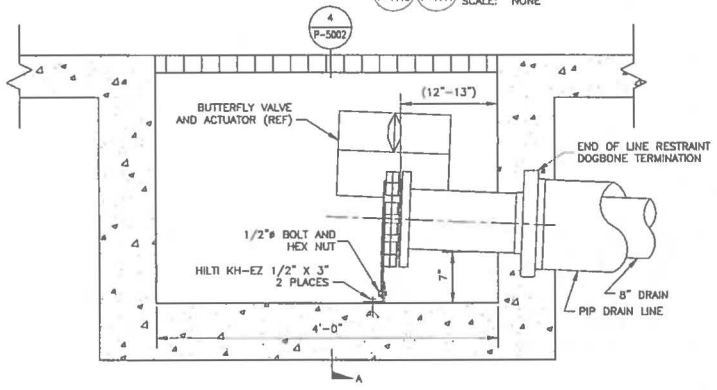

2 P-1108 / 2 P-1107 SUMP DETAIL
SCALE: NONE

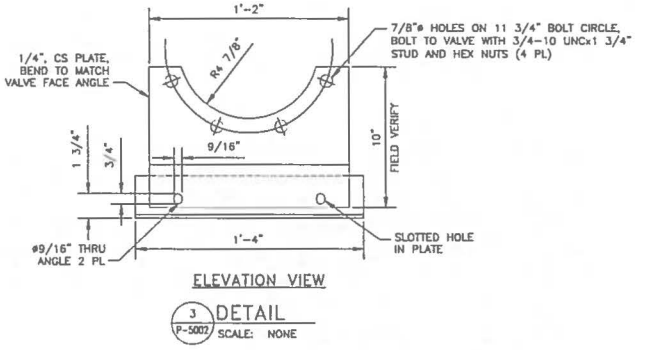

3 P-5002 DETAIL
SCALE: NONE

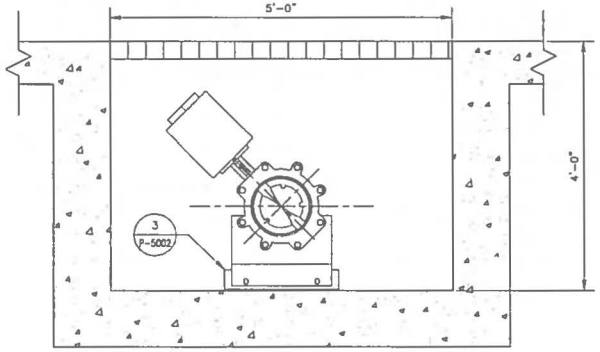

4 P-5002 DETAIL
SCALE: NONE

NO	DATE	CLASS REV	ADC	DESCRIPTION	DWN	DES	CHKD	SUB	APP

AECOM

RLWTF-UP LOW LEVEL WASTE SUBPROJECT

DETAILS

BLDG. 230 TA-50

DRAWN	V DAVISON
DESIGN	S MOORE
CHECKED	C MOYERS
DATE	5/6/14

SUBMITTED MANNY TARIN

APPROVED FOR RELEASE ED ARTIGLIA

Los Alamos NATIONAL LABORATORY PO Box 1663 Los Alamos, New Mexico 87545

SHEET P-5002

178 OF 434

CLASSIFICATION REVIEWER DATE

PROJECT ID 100761 DRAWING NO C55864 REV 0

CHARLES MOYERS 15939 NEW MEXICO REGISTERED PROFESSIONAL ENGINEER
05-07-14

122291

File: Location: P:\RLWTF LOW-LEVEL WASTE FACILITY\300 CAD\C55864 MAIN BUILDING\SHEETS\13 PLUMBING\C55864-P-5002-RG.DWG
Plotted By: MOORE, STEPHEN Plot Date: Monday, May 05, 2014

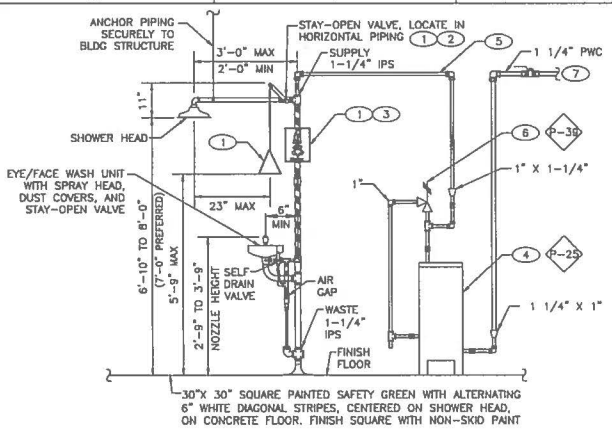

(1) P-1100 SAFETY SHOWER W/EYEWASH DETAIL
SCALE: NONE

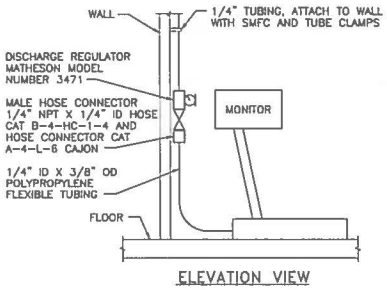

(2) (2) P-1104 P-1105 HFM & PCM CONNECTION DETAIL
SCALE: NONE

KEYED NOTES:

1. FURNISHED WITH EMERGENCY EQUIPMENT.
2. VALVE TO BE ACCESSIBLE FOR MAINTENANCE.
3. EMERGENCY SIGN(S).
4. ELECTRIC SAFETY SHOWER TEPID WATER HEATER.
5. TEPID WATER SUPPLY.
6. TEMPERATURE AND PRESSURE RELIEF VALVE.
7. FIELD ROUTE AND ANCHOR HORIZONTAL PIPING USING SIMILAR HARDWARE AND B-LINE PIPE STRAPS.

NO	DATE	CLASS REV	ADC	DESCRIPTION	DWN	DES	CHKD	SUB	APP

AECOM

RLWTF-UP LOW LEVEL WASTE SUBPROJECT

DETAILS

BLDG. 230 TA-50

DRAWN	V DAWSON
DESIGN	S MOORE
CHECKED	C MOYERS
DATE	5/8/14

SUBMITTED MANNY TARIN

APPROVED FOR RELEASE ED ARTIGLIA

Los Alamos NATIONAL LABORATORY PO Box 1663 Los Alamos, New Mexico 87545

SHEET P-5003

179 OF 434

CLASSIFICATION REVIEWER DATE

PROJECT ID 100761

DRAWING NO C55864

REV 0

CHARLES MOYERS NEW MEXICO 15838 REGISTERED PROFESSIONAL ENGINEER
05-01-14

File Location: P:\RLWTF LOW-LEVEL WASTE FACILITY\300 CAD\C55864 MAN BUILDING\SHEETS\13 PLUMBING\55864-P-5003-R0.DWG
Plotted By: MOORE, STEPHEN; Plot Date: Monday, May 05, 2014

1223

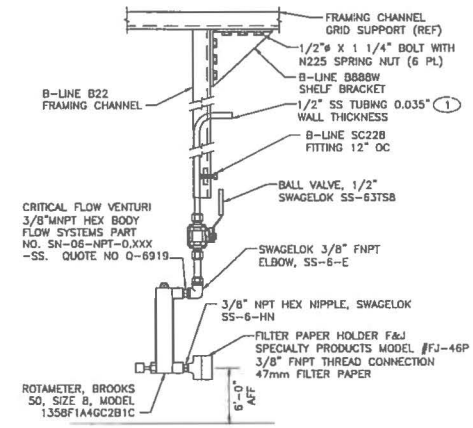

ELEVATION VIEW

1/P-1105 1/P-1104 FAS FRAMING SUPPORT DETAIL

SCALE: NONE

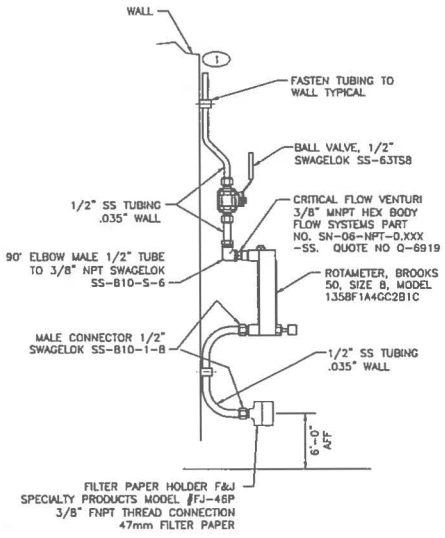

ELEVATION VIEW

2/P-1105 2/P-1104 FAS TYPICAL WALL MOUNTING DETAIL

SCALE: NONE

KEYED NOTES:

(1) FIELD ROUTE TO MAIN VACUUM HEADER. PROVIDE DIELECTRIC UNION AT COPPER VACUUM MAIN LINE.

NO	DATE	CLASS REV	ADC	DESCRIPTION	DWN	DES	CHKD	SUB	APP

AECOM

RLWTF-UP LOW LEVEL WASTE SUBPROJECT

DETAILS

DRAWN	V DAWSON
DESIGN	S MOORE
CHECKED	C MOYERS
DATE	5/8/14

BLDG. 230 TA-50

SUBMITTED MANNY TARIN

APPROVED FOR RELEASE ED ARTIGLIA

Los Alamos NATIONAL LABORATORY PO Box 1663 Los Alamos, New Mexico 87545

SHEET P-5004

180 OF 434

CLASSIFICATION | REVIEWER | DATE

PROJECT ID 100761 | DRAWING NO C55864 | REV 0

CHARLES MOYERS NEW MEXICO 19838 REGISTERED PROFESSIONAL ENGINEER

05-01-14

12271

File Location: P:\RLWTF LOW-LEVEL WASTE FACILITY\300 CAD\C55884 MAIN BUILDING\SHEETS\13 PLUMBING\55864-P-5004-RO.DWG

Plotted By: MOORE, STEPHEN Plot Date: Monday, May 05, 2014

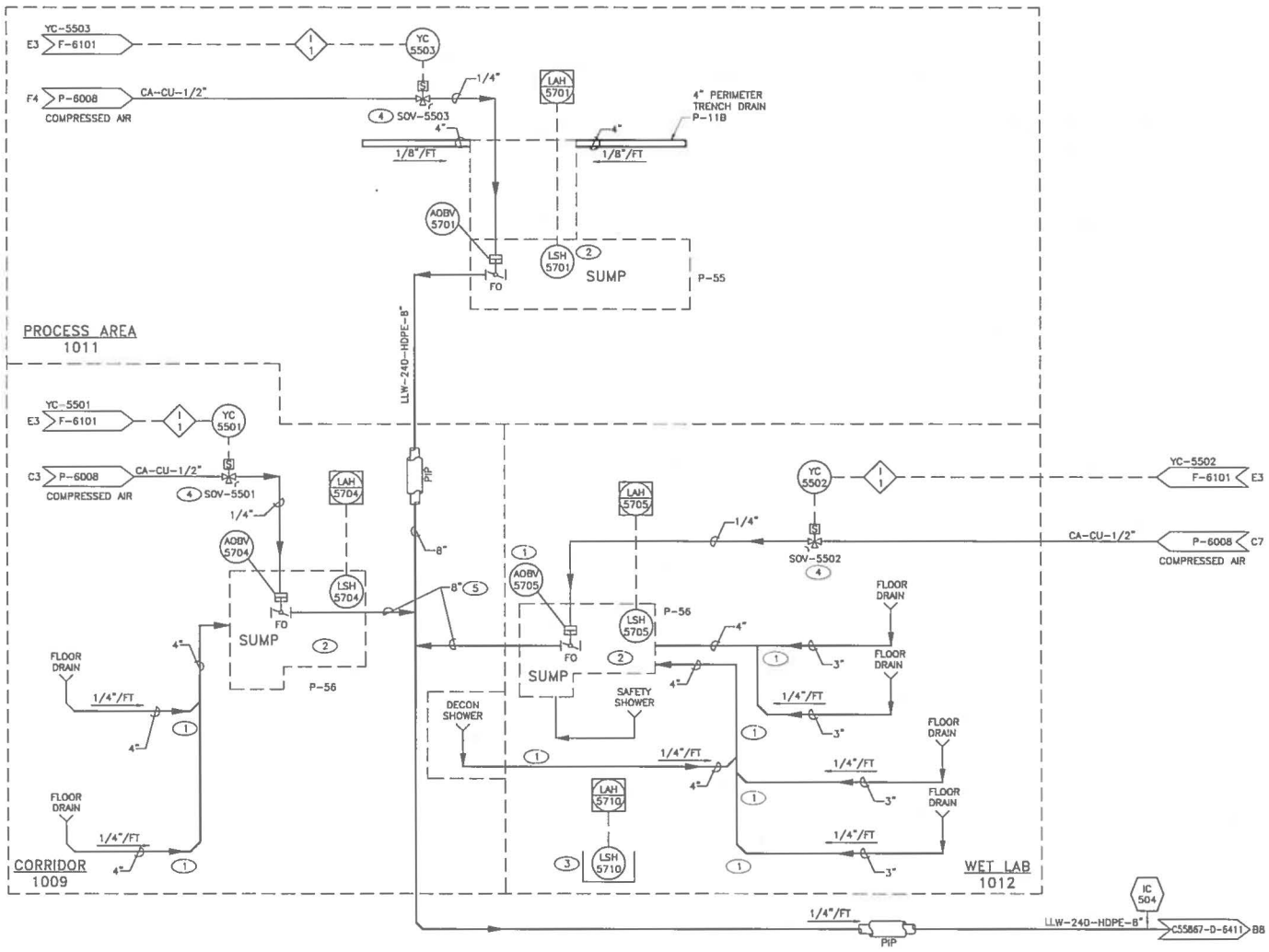

PROCESS AND FIRE WATER DRAIN P&ID

SCALE: NONE

GENERAL NOTES

1. SEE SHEETS P-0001 THROUGH P-0003 FOR LEGEND, ABBREVIATIONS AND GENERAL NOTES.
2. DRAIN PIPING SHALL BE INSTALLED IN ACCORDANCE WITH ASME B31.3, CATEGORY NORMAL FLUID SERVICE.
3. FOR PIPE ROUTING SEE DWG C55864, SHEETS P-1106, P-1107 & P-1108.

INTERLOCKS

1 SOLENOID VALVE OPENED BY FIRE ALARM PANEL IN EVENT OF FIRE ALARM.

KEYED NOTES

1. BURIED DRAIN LINES SHALL BE PIP PER CONSTRUCTION SPECIFICATION 60239831-SPEC-001, SECTION 221413.
2. PORTABLE SUMP PUMP USED WHEN LEAK DETECTED.
3. UTILITY TRENCH IN WET LAB.
4. SOV'S CONTROLLED BY FACP TO OPEN AOBV'S UPON FIRE ALARM ACTIVATION.
5. PIPE IN PIPE PER CONSTRUCTION SPECIFICATION 60239831-SPEC-001, SECTION 402319.

SEQUENCE OF OPERATIONS:

SUMP VALVES OPEN UPON RECIEPT OF FIRE ALARM SIGNAL. LIQUID IS SENT TO TA-50-250. ANY LIQUID COLLECTED IN SUMPS FROM OTHER THAN A FIRE EVENT IS CONSIDERED A LEAK. LEAK DETECTOR IS TRIGGERED AND COLLECTED LIQUID IS SAMPLED. LIQUID IS PUMPED FROM SUMPS USING PORTABLE PUMPS. LIQUID IS DISPOSED OF BASED ON SAMPLE RESULTS AND IN ACCORDANCE WITH WASTE DISPOSAL PROCEDURES.

"PRIORITY DRAWING"

NO	DATE	CLASS REV	ADC	DESCRIPTION	DWN	DES	CHKD	SUB	APP

AECOM

RLWTF-UP LOW LEVEL WASTE SUBPROJECT

PROCESS AND FIRE WATER DRAIN P&ID

BLDG. 230 TA-50

DRAWN	V DAVISON
DESIGN	S MOORE
CHECKED	C MOYERS
DATE	5/8/14

SUBMITTED MANNY TARIN

APPROVED FOR RELEASE ED ARTIGLIA

Los Alamos NATIONAL LABORATORY PO Box 1663 Los Alamos, New Mexico 87545

SHEET P-6001

181 OF 434

CLASSIFICATION | REVIEWER | DATE

PROJECT ID 100761 | DRAWING NO C55864 | REV 0

05-08-14

File Location: P:\RLWTF LOW-LEVEL WASTE FACILITY\500 CAD\C55864 MAIN BUILDING\SHEETS\13 PLUMBING\55864-P-6001-R0.DWG
Plotted By: MOORE, STEPHEN Plot Date: Monday, May 05, 2014

122232

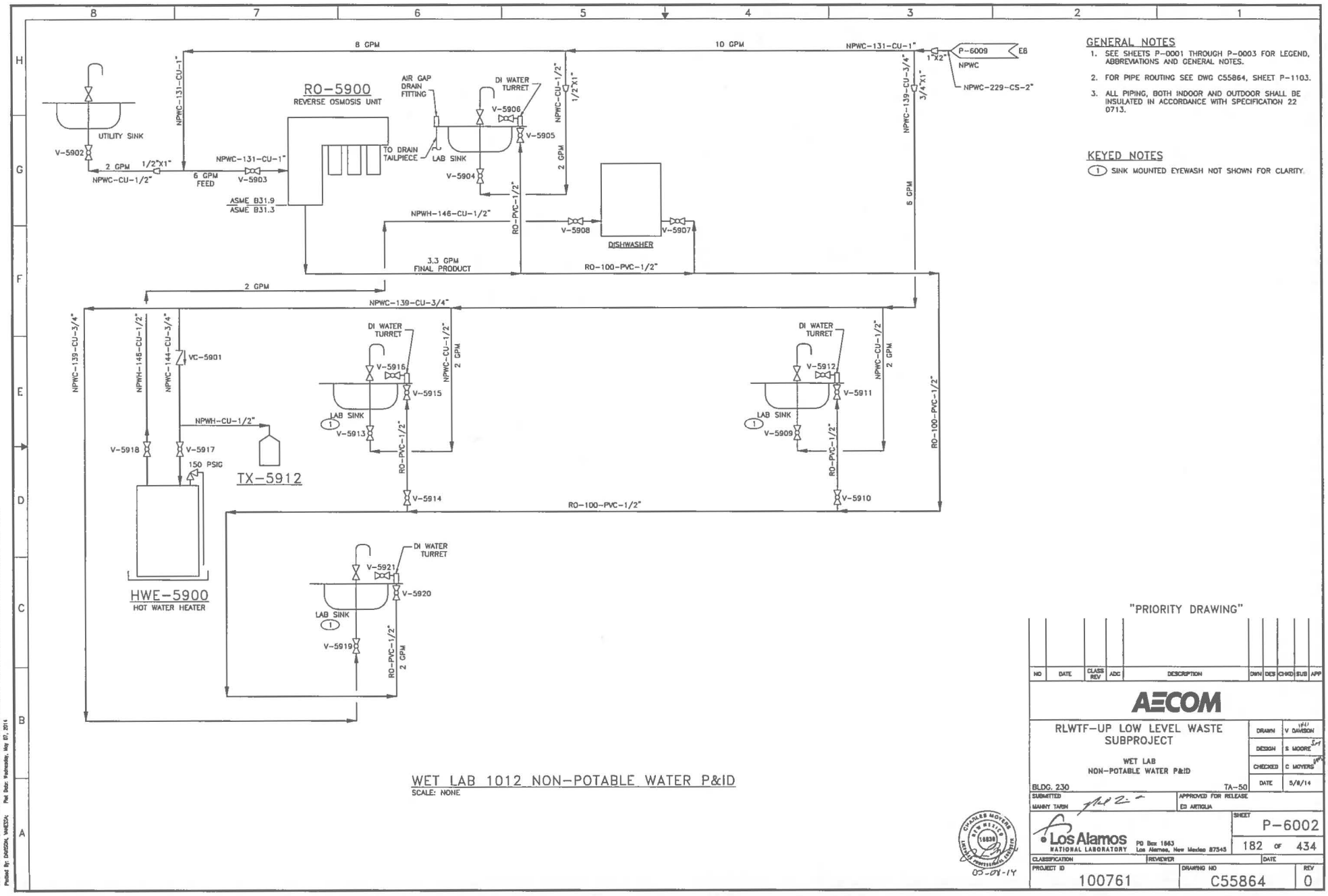

GENERAL NOTES

1. SEE SHEETS P-0001 THROUGH P-0003 FOR LEGEND, ABBREVIATIONS AND GENERAL NOTES.
2. FOR PIPE ROUTING SEE DWG C55864, SHEET P-1103.
3. ALL PIPING, BOTH INDOOR AND OUTDOOR SHALL BE INSULATED IN ACCORDANCE WITH SPECIFICATION 22 0713.

KEYED NOTES

(1) SINK MOUNTED EYEWASH NOT SHOWN FOR CLARITY.

WET LAB 1012 NON-POTABLE WATER P&ID

SCALE: NONE

"PRIORITY DRAWING"

NO	DATE	CLASS REV	ADC	DESCRIPTION	DWN	DES	CHKD	SUB	APP

AECOM

RLWTF-UP LOW LEVEL WASTE SUBPROJECT

WET LAB
NON-POTABLE WATER P&ID

BLDG. 230 TA-50

DRAWN	V. DAVISON
DESIGN	S. MOORE
CHECKED	C. MOYERS
DATE	5/8/14

SUBMITTED: MANNY TARIN

APPROVED FOR RELEASE: ED ARTIGLIA

Los Alamos NATIONAL LABORATORY
PO Box 1663 Los Alamos, New Mexico 87545

SHEET P-6002
182 OF 434

CLASSIFICATION | REVIEWER | DATE

PROJECT ID 100761 | DRAWING NO C55864 | REV 0

CHARLES MOYERS 16838 NEW MEXICO LICENSED PROFESSIONAL ENGINEER 05-07-14

12223

File Location: P:\RLWTF LOW-LEVEL WASTE FACILITY\500 CAD\C55864 MAIN BUILDING\SHEETS\13 PLUMBING\55864-P-6002-R0.DWG
Plotted By: DAVIDSN, VANESSA Plot Date: Wednesday, May 07, 2014

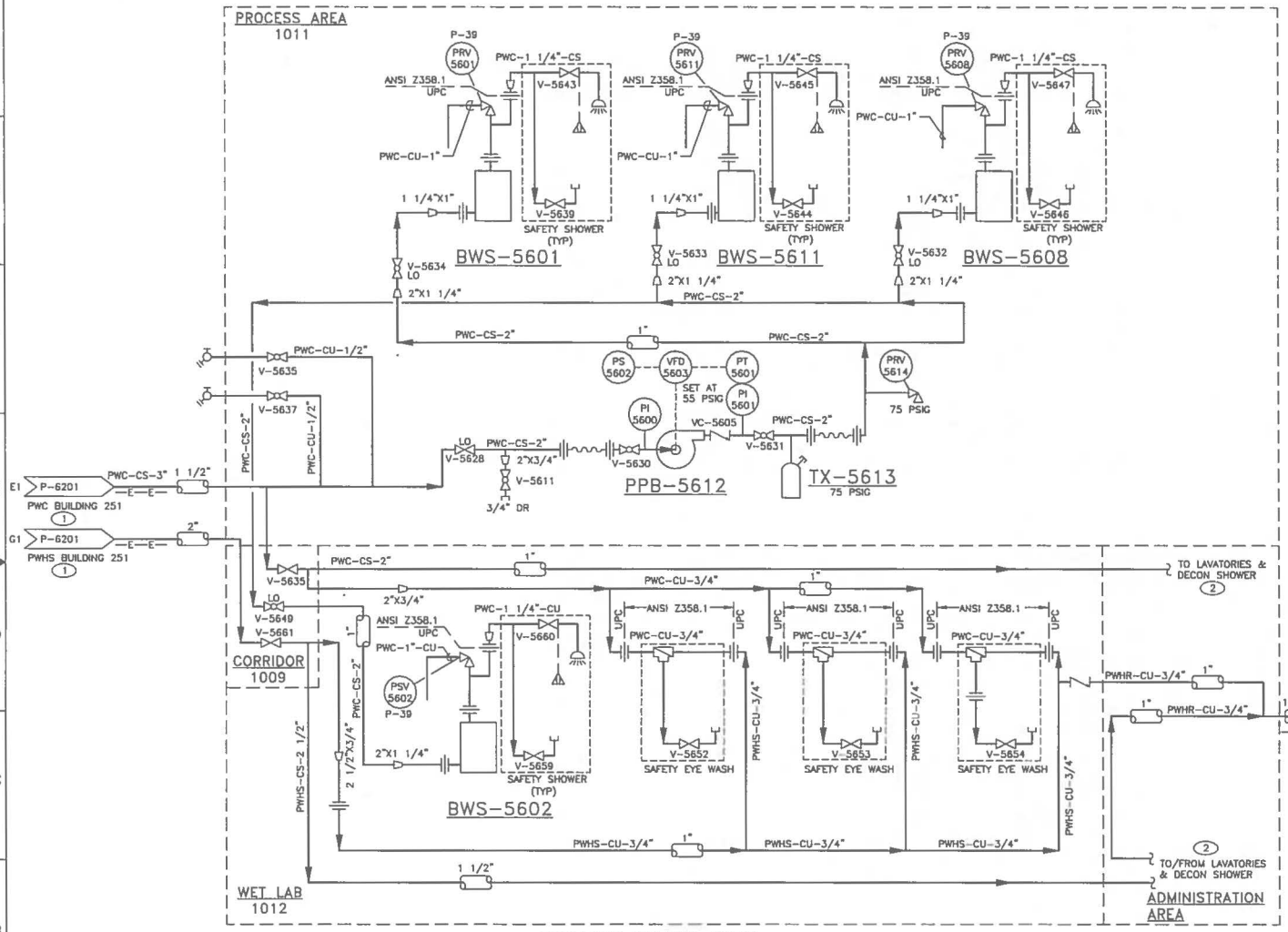

POTABLE WATER P&ID

SCALE: NONE

GENERAL NOTES

1. SEE SHEETS P-0001 THROUGH P-0003 FOR LEGEND, ABBREVIATIONS AND GENERAL NOTES.
2. FOR PIPE ROUTING SEE DWG C55864, SHEETS P-1100 & P-1101.
3. ALL PIPING, BOTH INDOOR AND OUTDOOR SHALL BE INSULATED IN ACCORDANCE WITH SPECIFICATION SECTION 22 0713.

KEYED NOTES

1. SHEET NUMBERS ARE FROM DRAWING C55865, BUILDING 251.
2. FOR ADMINISTRATION AREA PLUMBING, SHEETS P-1101 & P-6100.

SEQUENCE OF OPERATIONS: PPB-5612

THE VFD SHALL RECEIVE AN ANALOG SIGNAL (4-20mA) FROM THE FACTORY INSTALLED PRESSURE TRANSDUCER ON THE DISCHARGE MANIFOLD, INDICATING THE ACTUAL SYSTEM PRESSURE. WHEN A FLOW DEMAND IS DETECTED (SYSTEM PRESSURE DROPS BELOW THE START PRESSURE) THE VFD/MOTOR SHALL START AND INCREASE SPEED UNTIL THE ACTUAL SYSTEM PRESSURE MATCHES THE SYSTEM SET-POINT. AS FLOW DEMAND CHANGES (INCREASES OR DECREASES), THE SPEED OF THE PUMP SHALL BE ADJUSTED TO MAINTAIN THE SYSTEM SET-POINT PRESSURE.

WHEN ZERO FLOW IS DETECTED BY THE VFD, THE PUMP SHALL BE SWITCHED OFF. WHEN THE SYSTEM PRESSURE DROPS TO THE START PRESSURE, (FLOW BEGINS AFTER SHUT-DOWN), THE PUMP SHALL BE SWITCHED ON, INCREASING SPEED TO MAINTAIN THE SYSTEM SET-POINT PRESSURE. ZERO FLOW CONDITIONS SHALL BE DETECTED BY THE SYSTEM CONTROLLER/FACTORY INSTALLED PRESSURE TRANSMITTER WITHOUT THE USE OF ADDITIONAL FLOW SWITCHES OR MOTOR CURRENT SENSING DEVICES.

TEST SHOWERS WEEKLY PER ANSI/ISEA Z358.1-2009 PARAGRAPH 7.5.2.

"PRIORITY DRAWING"

NO	DATE	CLASS REV	ADC	DESCRIPTION	DWN	DES	CHKD	SUB	APP

AECOM

RLWTF-UP LOW LEVEL WASTE SUBPROJECT

POTABLE WATER P&ID

BLDG. 230 TA-50

DRAWN	V DAVISON
DESIGN	S MOORE
CHECKED	C MOYERS
DATE	5/8/14

SUBMITTED: MANNY TARIN

APPROVED FOR RELEASE: ED ARTIGLIA

Los Alamos NATIONAL LABORATORY PO Box 1663 Los Alamos, New Mexico 87545

SHEET P-6003

183 OF 434

CLASSIFICATION | REVIEWER | DATE

PROJECT ID 100761 | DRAWING NO C55864 | REV 0

05-08-14

File Location: P:\RLWTF LOW-LEVEL WASTE FACILITY\500 CAD\C55864 MAIN BUILDING\SHEETS\13 PLUMBING\55864-P-6003-R0.DWG
Plotted By: MOORE, STEPHEN Plot Date: Monday, May 05, 2014

12234

GENERAL NOTES

1. SEE SHEETS P-0001 THROUGH P-0003 FOR LEGEND, ABBREVIATIONS AND GENERAL NOTES.
2. DRAIN PIPING SHALL BE INSTALLED IN ACCORDANCE WITH THE UNIFORM PLUMBING CODE.
3. FOR PIPE ROUTING SEE DWG C55864, SHEETS P-1108 & P-1109.

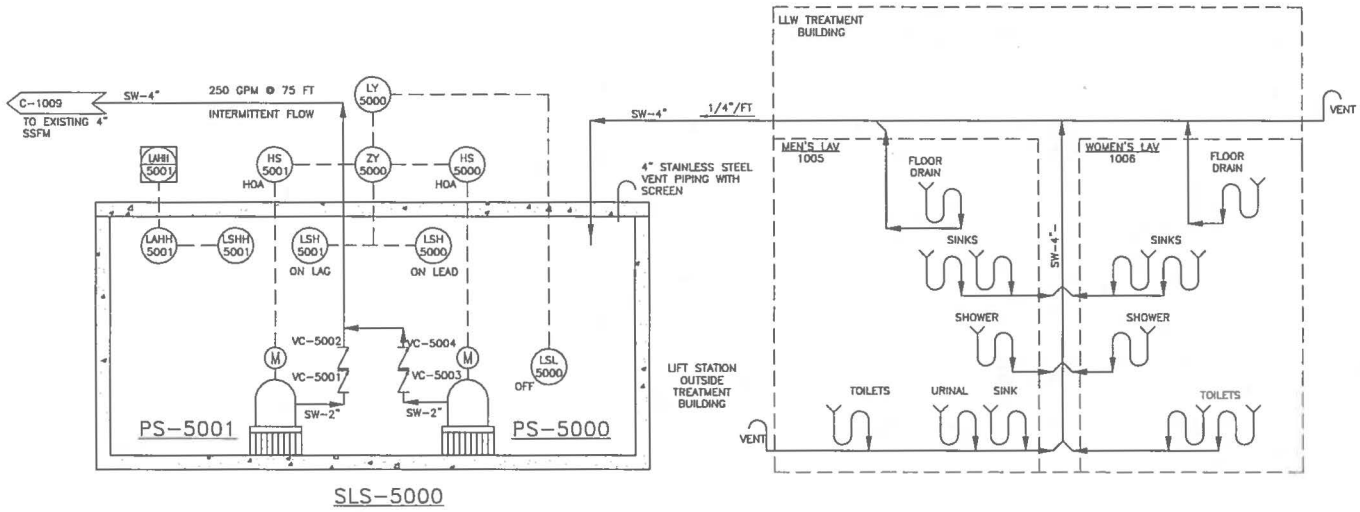

SLS-5000

SEWER SYSTEM P&ID

SCALE: NONE

SEQUENCE OF OPERATIONS:

NORMAL OPERATIONS: WHEN THE HOA SWITCHES ARE PLACED IN AUTO THE PUMPS SHALL ALTERNATE THROUGH THE FOLLOWING SEQUENCE: LEAD AND LAG. THE LEVEL SETPOINTS AT WHICH THE PUMP STARTS AND STOPS IN THE SEQUENCE SHALL BE FIELD ADJUSTABLE. WHEN THE LEVEL IN THE SUMP REACHES THE HIGH LEVEL LSH-5000 THE LEAD PUMP WILL START. WHEN THE LEVEL IN THE SUMP REACHES THE LOW LEVEL SETPOINT LSL-5000 THE LEAD PUMP WILL STOP. THE ALTERNATOR ZY-5000 WILL CHANGE LEAD PUMP TO LAG AND THE LAG PUMP TO LEAD. IF THE LEVEL IN THE LIFT STATION RISES TO LSH-5001 (LSH-5001 IS INSTALLED AT A HIGHER LEVEL THAN LDH-500) THE LAG PUMP WILL START. WHEN THE LEVEL DROPS TO THE LOW LEVEL SETPOINT BOTH PUMPS WILL STOP. WHEN THE LIFT STATION RISES TO LSHH-5001, A BECAON LIGHT, A HORN AND A FCS ALARM ARE TRIGGERED.

"PRIORITY DRAWING"

NO	DATE	CLASS REV	ADC	DESCRIPTION	DWN	DES	CHKD	SUB	APP

AECOM

RLWTF-UP LOW LEVEL WASTE SUBPROJECT

SEWER SYSTEM P&ID

DRAWN V DAWSON
DESIGN S MOORE
CHECKED C MOYERS
DATE 5/8/14

BLDG. 230 TA-50

SUBMITTED MANNY TARIN

APPROVED FOR RELEASE ED ARTIGLIA

Los Alamos NATIONAL LABORATORY
PO Box 1663 Los Alamos, New Mexico 87545

SHEET P-6004
184 OF 434

CLASSIFICATION | REVIEWER | DATE

PROJECT ID 100761 | DRAWING NO C55864 | REV 0

CHARLES MOYERS 10838 NEW MEXICO REGISTERED PROFESSIONAL ENGINEER
05-08-14

File Location: P:\RLWTF LOW-LEVEL WASTE FACILITY\300 CAD\C55864 MAIN BUILDING\SHEETS\13 PLUMBING\55864-P-6004-R0.DWG
Plotted By: MOORE, STEPHEN Plot Date: Monday, May 05, 2014

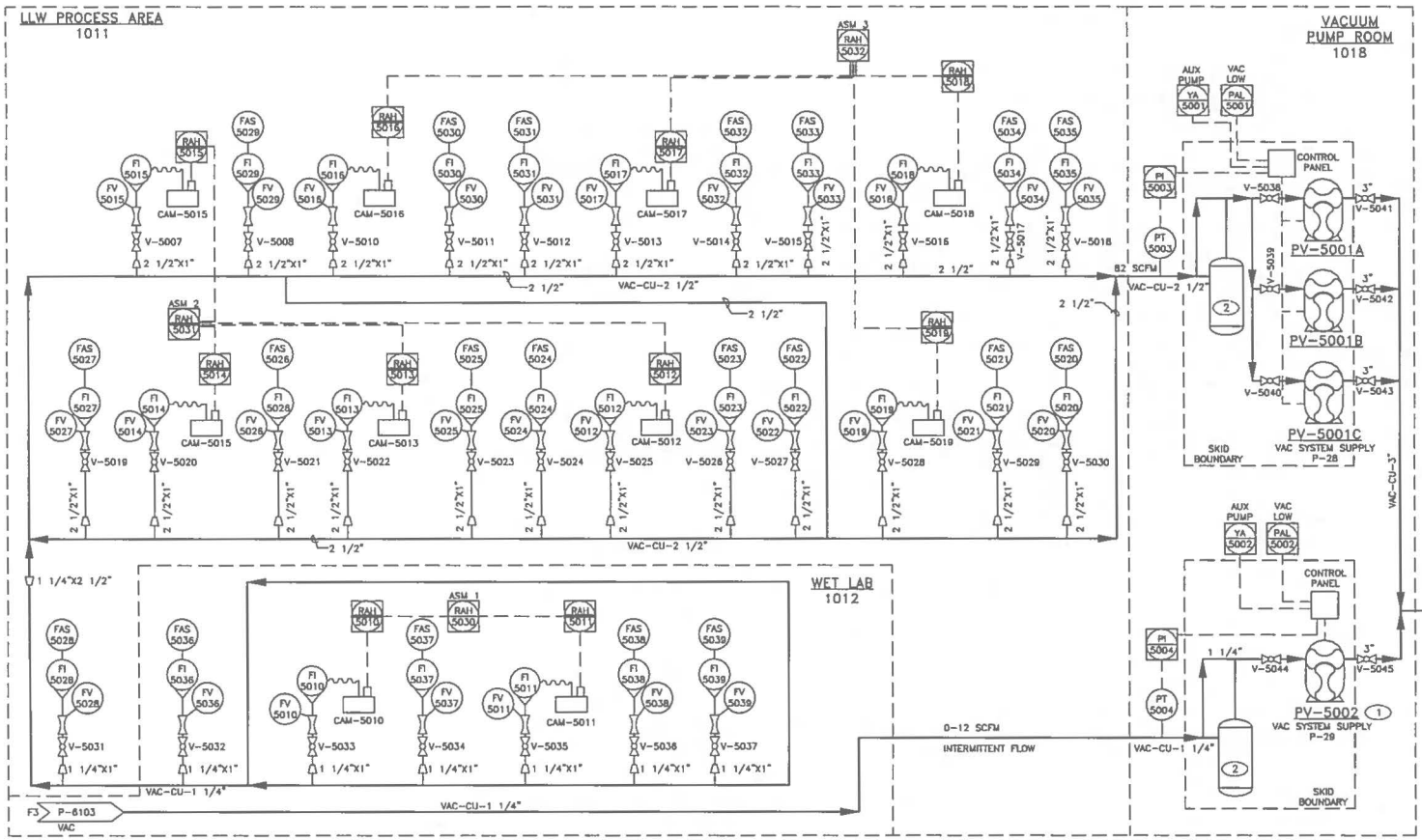

CAM AND FAS P&ID

SCALE: NONE

GENERAL NOTES

1. RAH 5030, 5031 AND 5032 ARE REMOTE ALARMS GENERATED BY STAND ALONE CONTROLLERS LOCATED IN THE CONTROL ROOM.
2. RAH 5010-5019 ARE LOCAL ALARMS GENERATED BY AN ALARM MODULE DIRECTLY ATTACHED TO THE SAMPLING HEAD.
3. SEE SHEETS P-0001 THROUGH P-0003 FOR LEGEND, ABBREVIATIONS, AND GENERAL NOTES.
4. INSTALL PIPING WITH 1% SLOPE DOWNWARD IN THE DIRECTION OF FLOW.
5. INSTALL AND CONNECT CAM AND FAS PER VENDOR INSTRUCTIONS.
6. FAS PIPING SHALL BE INSTALLED IN ACCORDANCE WITH ASME B31.9.
7. FOR PIPE ROUTING SEE DWG C55864, SHEETS P-1104 & P-1105.

KEYED NOTES

(1) VACUUM FOR WET LABORATORY PROCESS.

(2) CONDENSATE DRAINS LOCATED ON EACH VACUUM RECEIVER TANK: PV-5002 = 120 GAL, PV-5001(A,B,C) = 240 GAL

SEQUENCE OF OPERATIONS:

NORMAL OPERATIONS: THE VACUUM SYSTEM CONSISTS OF THREE VACUUM PUMPS IN A LEAD/LAG ARRANGEMENT. ON COLD START UP THE LOW VACUUM ALARM IS INOPERATIVE UNTIL THE LOW VACUUM ALARM AND LOW VACUUM SET POINT (18IN. HG ADJUSTABLE) HAS BEEN REACHED.

CONDITION 1: LOW LEVEL VACUUM HAS BEEN ATTAINED.

CONDITION 2: HIGH LEVEL VACUUM HAS BEEN ATTAINED.

1. TURN OFF THE PUMP WITH THE GREATEST NUMBER OF HOURS THAT HAVE ALSO EXPIRED THE MINIMUM RUN TIMER. TURN OFF AN ADDITIONAL PUMP EVERY 20 SECONDS UNTIL THE VACUUM DROPS BELOW THE HIGH VACUUM SET POINT (MINIMUM RUN TIME APPLIES).

CONDITION 3: LOW LEVEL VACUUM HAS BEEN DROPPED BELOW SET POINT

1. TURN ON THE PUMP WITH THE LEAST NUMBER OF HOURS.
2. TURN ON THE AN ADDITIONAL PUMP EVERY 20 SECONDS UNTIL THE VACUUM ATTAINS THE LOW LEVEL SET POINT.
3. ACTIVATE ALL PUMPS RUNNING ALARM ON AN AS NEEDED BASIS.

CONDITION 4: LOW ALARM VACUUM HAS DROPPED BELOW SET POINT

1. ACTIVATE ALARM.

CONDITION 5: STEADY STATE (VACUUM LEVEL REMAINS ABOVE THE LOW SET POINT AND BELOW THE HIGH SET POINT)

1. TURN OFF PUMPS AFTER MAXIMUM RUN TIME EXPIRES.

HAND OPERATIONS: PLACE THE LEAD PUMP IN "HAND" AND THE LAG PUMP "OFF" AT THE HOA SWITCHES. THE LEAD PUMP WILL START AND OPERATE CONTINUOUSLY.

PLC FAULT: IF A PLC FAULT OCCURS, AND ALL PUMPS ARE IN "AUTO" THE LEAD PUMP WILL START AND RUN CONTINUOUSLY AND THE "LAG ALARM" WILL START. IF A PLC FAULT SHOULD OCCUR TURN A PUMP TO HAND AND OPERATE CONTINUOUSLY UNTIL THE PLC FAULT IS REPAIRED.

"PRIORITY DRAWING"

NO	DATE	CLASS REV	ADC	DESCRIPTION	DWN	DES	CHKD	SUB	APP

AECOM

RLWTF-UP LOW LEVEL WASTE SUBPROJECT

CAM AND FAS P&ID

DRAWN	V DAVIDSON
DESIGN	S MOORE
CHECKED	C MOYERS
DATE	5/8/14

BLDG. 230 TA-50

SUBMITTED MANNY TARIN

APPROVED FOR RELEASE ED ARTIGLIA

Los Alamos NATIONAL LABORATORY PO Box 1663 Los Alamos, New Mexico 87545

SHEET P-6006

185 OF 434

CLASSIFICATION REVIEWER DATE

PROJECT ID 100761 DRAWING NO C55864 REV 0

05-CN-14

File Location: P:\PLANT\ LOW-LEVEL WASTE FACILITY\500 CAD\C55864 MAIN BUILDING\SHEETS\13 PLUMBING\C55864-P-6006-R0.DWG
Plotted By: MOORE, STEPHEN Plot Date: Monday, May 05, 2014

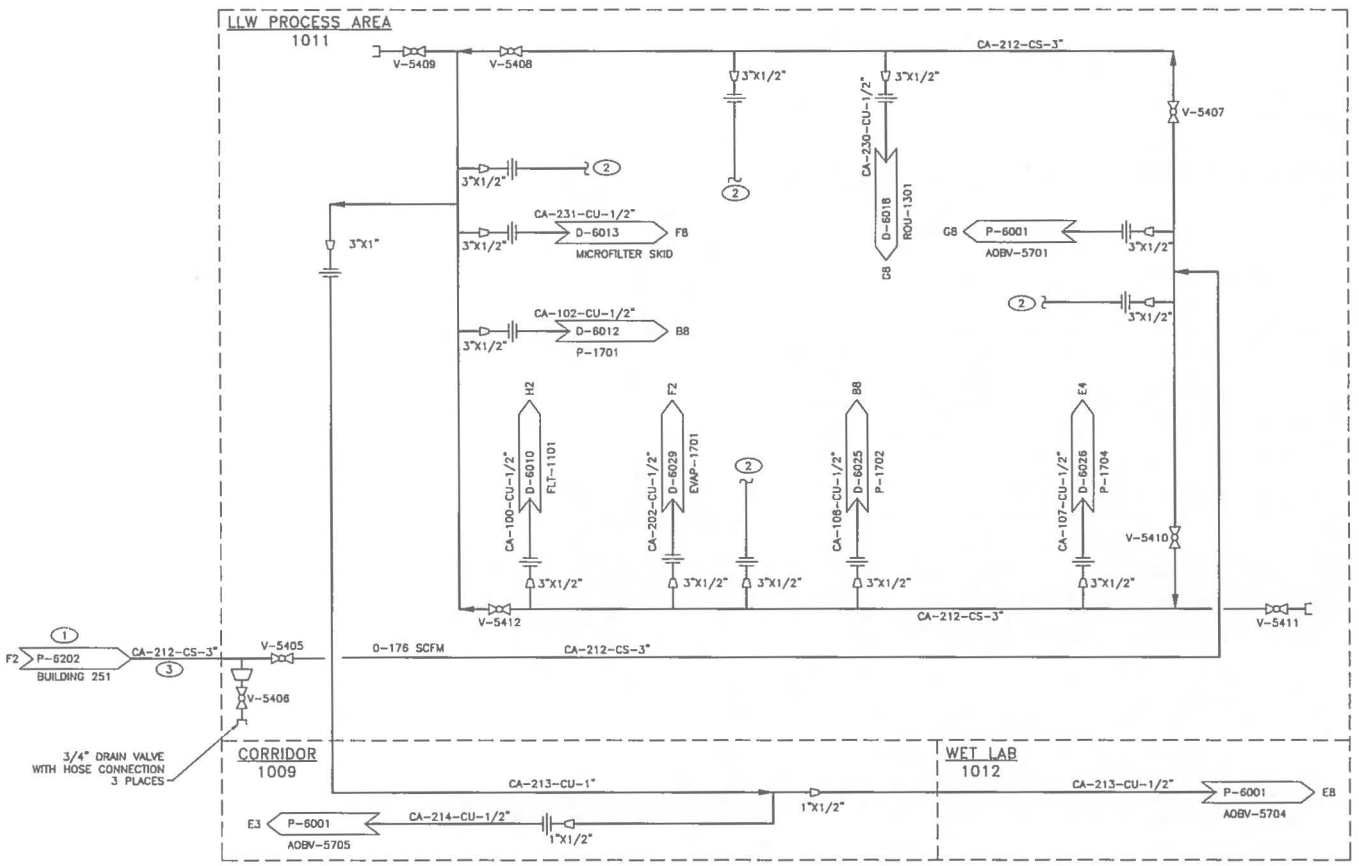

COMPRESSED AIR P&ID
SCALE: NONE

GENERAL NOTES

1. SEE SHEETS P-0001 THROUGH P-0003 FOR LEGEND, ABBREVIATIONS AND GENERAL NOTES.
2. COMPRESSED AIR PIPING SHALL BE INSTALLED IN ACCORDANCE WITH ASME B31.3.
3. FOR PIPE ROUTING SEE DWG C55864, SHEET P-1104.

KEYED NOTES

(1) SHEET NUMBER IS FROM DRAWING C55865, BUILDING 251.

(2) FIELD ROUTE AND SUPPORT ø1/2" OR LESS CA BRANCH LINES FROM THE HEADER TO CONNECTION POINT ON VENDOR PROVIDED EQUIPMENT AND OR VALVES. FOR BRANCH SUPPLY CONNECTIONS, SEE THE COMPRESSED AIR BRANCH TABLE ON THIS SHEET, ZONE A8.

(3) COMPRESSED AIR LINE FROM UTILITY BUILDING IS INSULATED AND HEAT TRACED OUTSIDE OF TREATMENT BUILDING.

COMPRESSED AIR TABLE (2)	
SHEET	EQUIPMENT/VALVE
D-6010	AOBV 1103, 1107
D-6012	AOBV-1115, 5622, 1122, 1126, LCV-1124
D-6013	AOBV-5623, 5627
D-6014	AOBV-1124, 1214, FCV-1206, FLT-1201
D-6016	AOBV-1304
D-6017	FCV-1311, 1315
D-6018	AOBV-1320, 1326, 1323, 1324, 1355, 1329, 1331
D-6019	AOBV-5624
D-6020	AOBV-1340
D-6021	AOBV-1342, FCV-1403
D-6023	AOBV-1708, FCV-1707
D-6024	AOBV-1706
D-6025	AOBV-5625, 1717
D-6027	FCV-1719
D-6028	AOBV-5626, 1737
D-6029	AOBV-1728
D-6030	AOBV-1157, FCV-1700, 1701
D-6035	REFER TO DIAGRAM 1 FOR COMPOSITE SAMPLERS AND DIAGRAM 2 FOR MANUAL FIXED VOLUME SAMPLERS

"PRIORITY DRAWING"

NO	DATE	CLASS REV	ADC	DESCRIPTION	DWN	DES	CHKD	SUB	APP

AECOM

RLWTF-UP LOW LEVEL WASTE SUBPROJECT

COMPRESSED AIR P&ID

DRAWN	V DAVISON
DESIGN	S MOORE
CHECKED	C MOYERS
DATE	5/8/14

BLDG. 230 TA-50

SUBMITTED MANNY TARIN

APPROVED FOR RELEASE ED ARTIGLIA

Los Alamos NATIONAL LABORATORY PO Box 1663 Los Alamos, New Mexico 87545

SHEET P-6008

186 OF 434

CLASSIFICATION REVIEWER DATE

PROJECT ID 100761

DRAWING NO C55864

REV 0

CHARLES MOYERS NEW MEXICO 10839 REGISTERED PROFESSIONAL ENGINEER 05-08-14

12221:

File Location: P:\RLWTF LOW-LEVEL WASTE FACILITY\300 CAD\C55864 MAIN BUILDING\SHEETS\13 PLUMBING\55864-P-6008-R0.DWG
Plotted By: MOORE, STEPHEN Plot Date: Monday, May 05, 2014

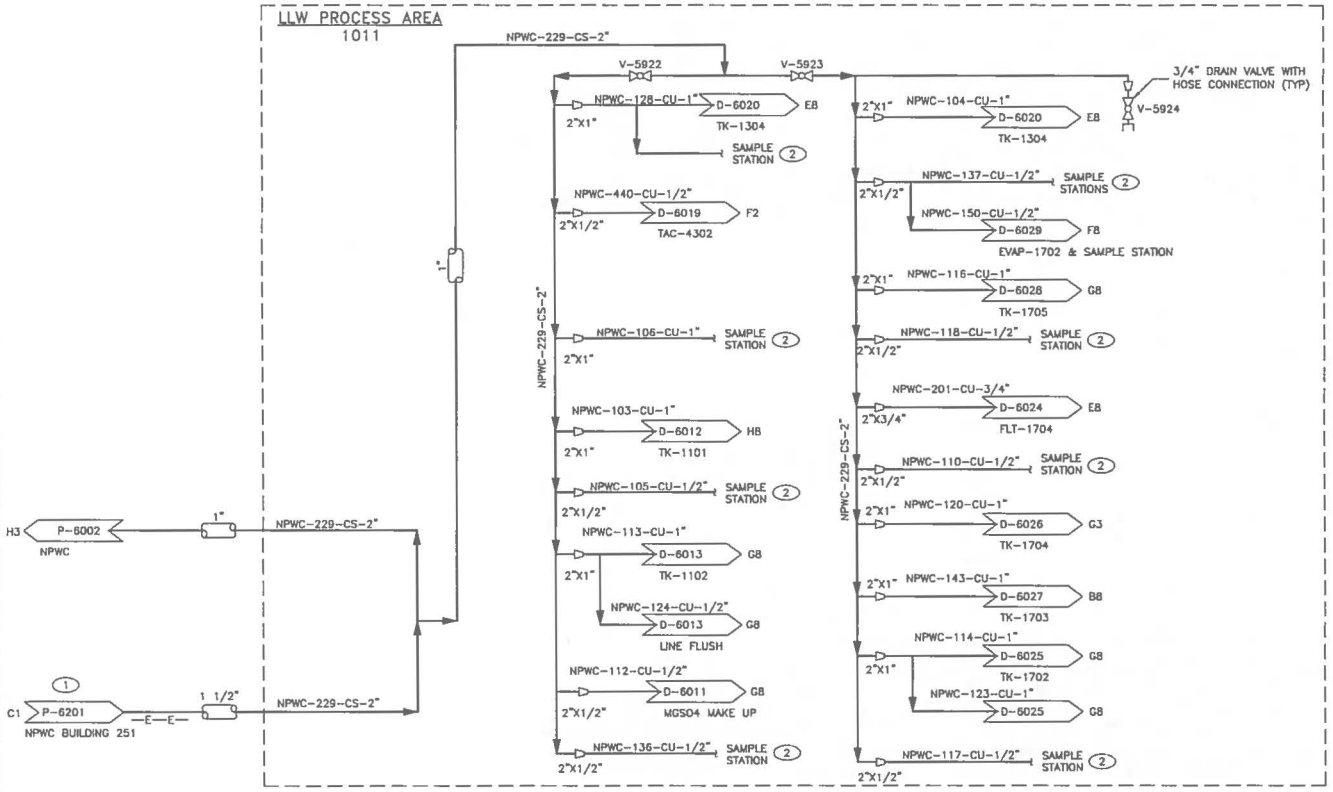

PROCESS NON-POTABLE WATER P&ID

SCALE: NONE

GENERAL NOTES

1. SEE SHEETS P-0001 THROUGH P-0003 FOR LEGEND, ABBREVIATIONS AND GENERAL NOTES.
2. PIPING SHALL BE INSTALLED IN ACCORDANCE WITH ASME B31.3.
3. FOR PIPE ROUTING SEE DWG C55864, SHEET P-1102.
4. ALL PIPING, BOTH INDOOR AND OUTDOOR SHALL BE INSULATED IN ACCORDANCE WITH SPECIFICATION SECTION 22 0713.

KEYED NOTES

(1) SHEET NUMBERS ARE FROM DRAWING C55865, BUILDING 251.

(2) FIELD ROUTE AND SUPPORT #1" OR LESS NPWC BRANCH LINES FROM THE HEADER TO CONNECTION POINT ON SAMPLE STATIONS. FOR BRANCH SUPPLY CONNECTIONS, SEE THE NPWC BRANCH TABLE ON THIS SHEET, ZONE A8.

NPWC BRANCH TABLE (2)

SHEET	ZN	EQUIPMENT	LINE
D-6010	E3	SMP-1106	NPWC-136-CU-1/2"
D-6014	G4	SMP-1203	NPWC-105-CU-1/2"
D-6017	G5	SMP-1306	NPWC-106-CU-1/2"
D-6020	E8	SMP-1310	NPWC-128-CU-1/2"
D-6021	D7	SMP-1408	NPWC-137-CU-1/2"
D-6021	E5	SMP-1410	NPWC-119-CU-1/2"
D-6022	E7	SMP-1412	NPWC-121-CU-1/2"
D-6022	E4	SMP-1414	NPWC-122-CU-1/2"
D-6023	G5	SMP-1707	NPWC-110-CU-1/2"
D-6027	E4	SMP-1711	NPWC-117-CU-1/2"
D-6030	G5	SMP-1706	NPWC-118-CU-1/2"

"PRIORITY DRAWING"

NO	DATE	CLASS REV	ADC	DESCRIPTION	DRWN	DES	CHKD	SUB	APP

AECOM

RLWTF-UP LOW LEVEL WASTE SUBPROJECT

NON-POTABLE WATER P&ID

BLDG. 230 TA-50

DRAWN	V DAVISON
DESIGN	S MOORE
CHECKED	C MOYERS
DATE	5/8/14

SUBMITTED: MANNY TARIN

APPROVED FOR RELEASE: ED ARTIGLIA

Los Alamos NATIONAL LABORATORY PO Box 1663 Los Alamos, New Mexico 87545

SHEET P-6009

187 OF 434

CLASSIFICATION | REVIEWER | DATE

PROJECT ID 100761 | DRAWING NO C55864 | REV 0

CHARLES MOYERS 15838 REGISTERED PROFESSIONAL ENGINEER STATE OF NEW MEXICO 05-07-14

86221

File Location: P:\RLWTF LOW-LEVEL WASTE FACILITY\500 CAD\C55864 MAIN BUILDING\SHEETS\13 PLUMBING\C55864-P-6009-R0.DWG
Plotted By: MOORE, STEPHEN Plot Date: Monday, May 05, 2014

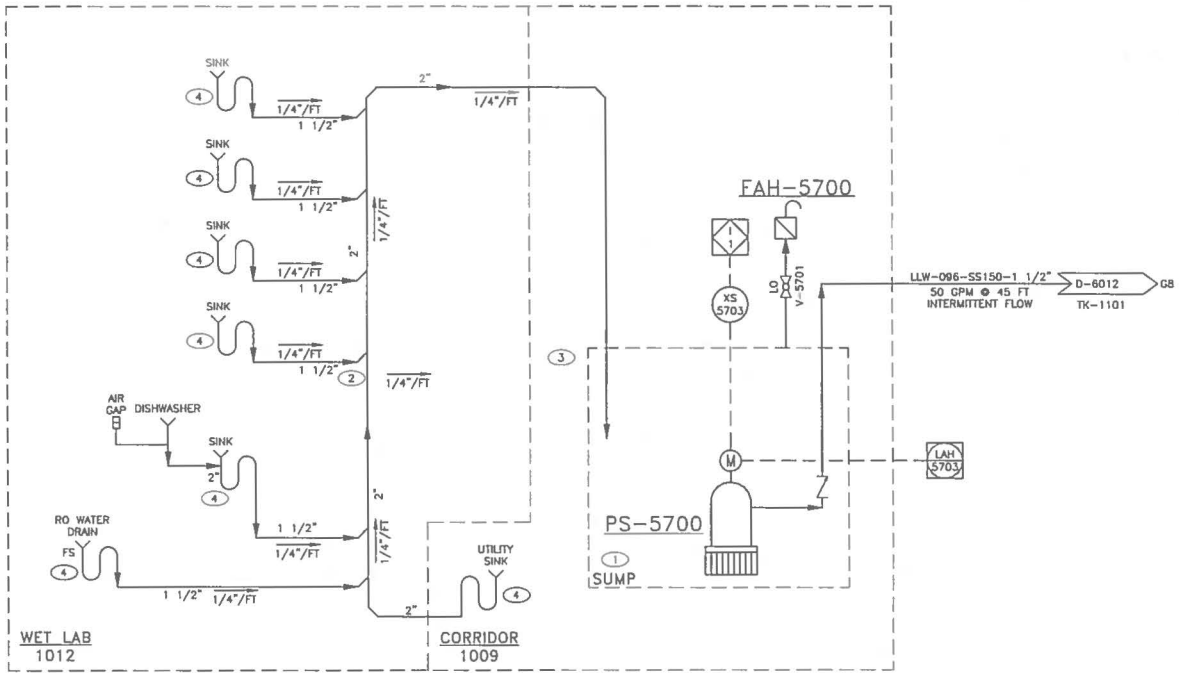

WET LAB AREA SUMP P&ID

SCALE: NONE

GENERAL NOTES

1. SEE SHEETS P-0001 THROUGH P-0003 FOR LEGEND, ABBREVIATIONS AND GENERAL NOTES.
2. DRAIN PIPING SHALL BE INSTALLED IN ACCORDANCE WITH ASME B31.3, CATEGORY NORMAL FLUID SERVICE.
3. FOR PIPE ROUTING SEE DWG C55864, SHEET P-1107.

INTERLOCKS

(I) SOFTWARE INTERLOCK. PUMP SHUT DOWN BY FACILITY CONTROL SYSTEM IN EVENT OF HIGH LEVEL IN TK-1101. SEE SHEET D-6012.

KEYED NOTES

(1) SUMP PIT WILL BE MANUFACTURED TANK SET IN FLOOR.

(2) DRAIN PIPING RUN IN TRENCH IN WET LAB AREA.

(3) DRAIN PIPING RUN UNDERGROUND IS PIPE IN PIPE PER CONSTRUCTION SPECIFICATIONS 60239831-SPEC-001 SECTION 22 1413.

(4) PROVIDE CLEAR PVC TRAP.

SEQUENCE OF OPERATIONS:

WET LABORATORY SINK AND GLASS WASHER WASTE AND CORRIDOR UTILITY SINK WASTE IS COLLECTED IN SUMP. SUMP PUMP ACTIVATES ON SUMP LEVEL SIGNAL AND PUMPS WASTE TO PROCESS TANK 1101. DURING FIRE EVENT SUMP PUMP IS DISABLED.

"PRIORITY DRAWING"

NO	DATE	CLASS REV.	ADC	DESCRIPTION	DWN	DES	CHKD	SUB	APP

AECOM

RLWTF-UP LOW LEVEL WASTE SUBPROJECT

WET LAB AREA SUMP P&ID

BLDG. 230 TA-50

DRAWN	V DAWSON
DESIGN	S MOORE
CHECKED	C MOYERS
DATE	5/6/14

SUBMITTED MANNY TARIN

APPROVED FOR RELEASE ED ARTIOLA

Los Alamos NATIONAL LABORATORY PO Box 1663 Los Alamos, New Mexico 87545

SHEET P-6010

188 OF 434

CLASSIFICATION | REVIEWER | DATE

PROJECT ID 100761 | DRAWING NO C55864 | REV 0

CHARLES MOYERS 15838 NEW MEXICO REGISTERED PROFESSIONAL ENGINEER 05-07-14

File Location: P:\RLWTF LOW-LEVEL WASTE FACILITY\000 CAD\C55864 MAIN BUILDING\SHEETS\13 PLUMBING\55864-P-6010-R0.DWG
Plotted By: DAWSON, VANESSA Plot Date: Wednesday, May 07, 2014

162239

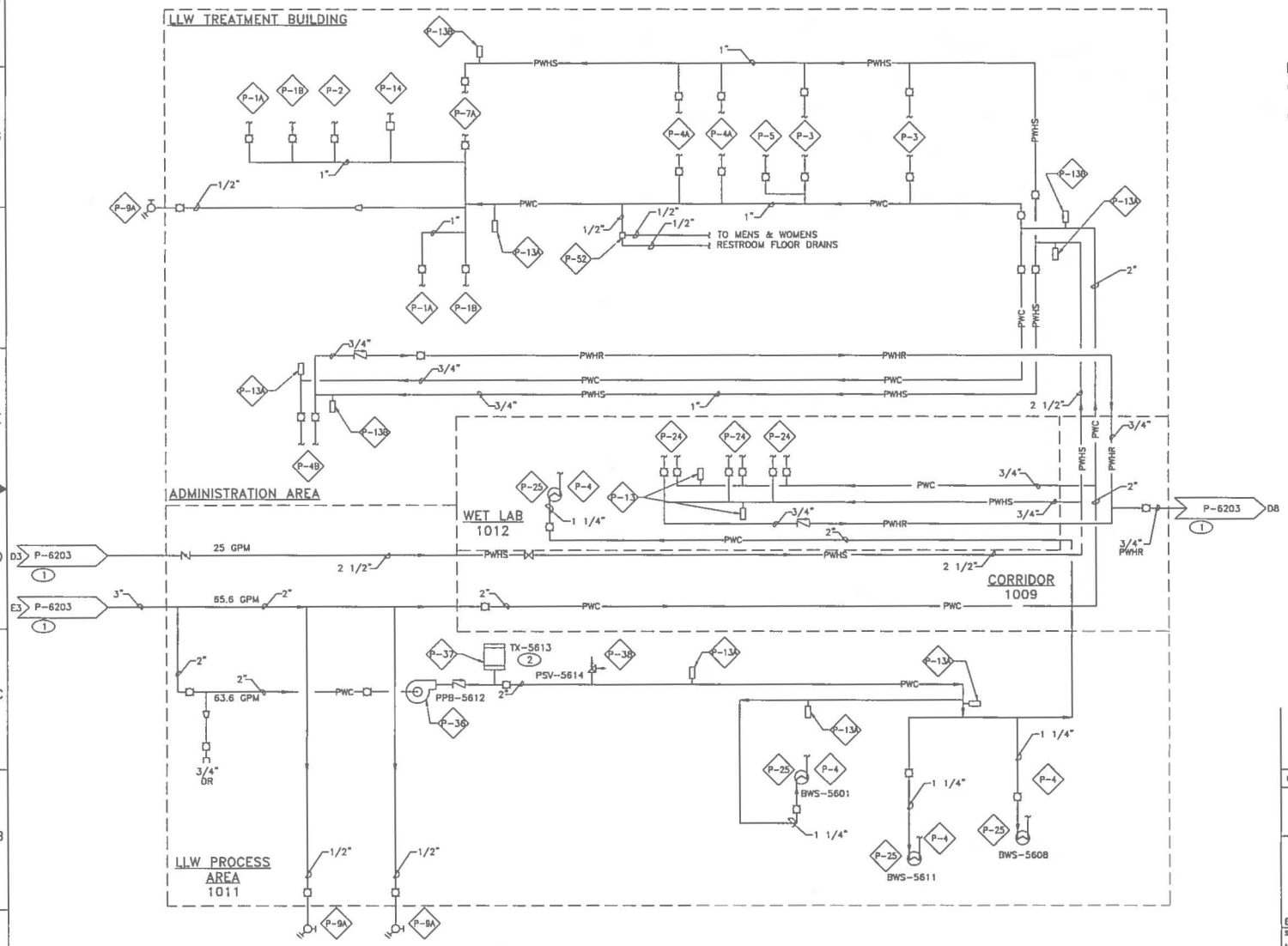

POTABLE WATER FLOW DIAGRAM
SCALE: NONE

GENERAL NOTES

1. SEE SHEETS P-7100 THRU P-7104 FOR PLUMBING EQUIPMENT LIST.
2. FOR PIPE ROUTING SEE DWG C55864, SHEETS P-1100 & P-1101.

KEYED NOTES

1. SHEET NUMBERS ARE FROM THE LLW UTILITY BUILDING DRAWING C55865.
2. EXPANSION TANK TX-5613 SHALL BE PRE-CHARGED TO 45 PSIG.

NO	DATE	CLASS REV	ADC	DESCRIPTION	DWN	DES	CHKD	SUB	APP

AECOM

RLWTF-UP LOW LEVEL WASTE SUBPROJECT

POTABLE WATER FLOW DIAGRAM

BLDG. 230 TA-50

DRAWN	V DAVISON
DESIGN	S MOORE
CHECKED	C MOYERS
DATE	5/8/14

SUBMITTED MANNY TARIN

APPROVED FOR RELEASE ED ARTIGLIA

Los Alamos NATIONAL LABORATORY PO Box 1663 Los Alamos, New Mexico 87545

SHEET P-6100

189 OF 434

CLASSIFICATION | REVIEWER | DATE

PROJECT ID 100761 | DRAWING NO C55864 | REV 0

CHARLES MOYERS NEW MEXICO 16838 LICENSED PROFESSIONAL ENGINEER 05-08-14

File Location: P:\RLWTF LOW-LEVEL WASTE FACILITY\500 CAD\C55864 MAIN BUILDING\SHEETS\13 PLUMBING\C55864-P-6100-R0.DWG
Plotted By: MOORE, STEPHEN Plot Date: Monday, May 05, 2014

: 122110

GENERAL NOTES

1. SEE SHEETS P-7100 THRU P-7104 FOR PLUMBING EQUIPMENT LIST.
2. FOR PIPE ROUTING SEE DWG C55864, SHEETS P-1102 & P-1103.

KEYED NOTES

1. FOR NON-POTABLE WATER PROCESS EQUIPMENT CONNECTIONS, SEE SHEET P-6009.
2. SHEET NUMBERS ARE FROM THE LLW UTILITY BUILDING DRAWING C55865.
3. EXPANSION TANK TX-5912 SHALL BE PRE-CHARGED TO 40 PSIG.

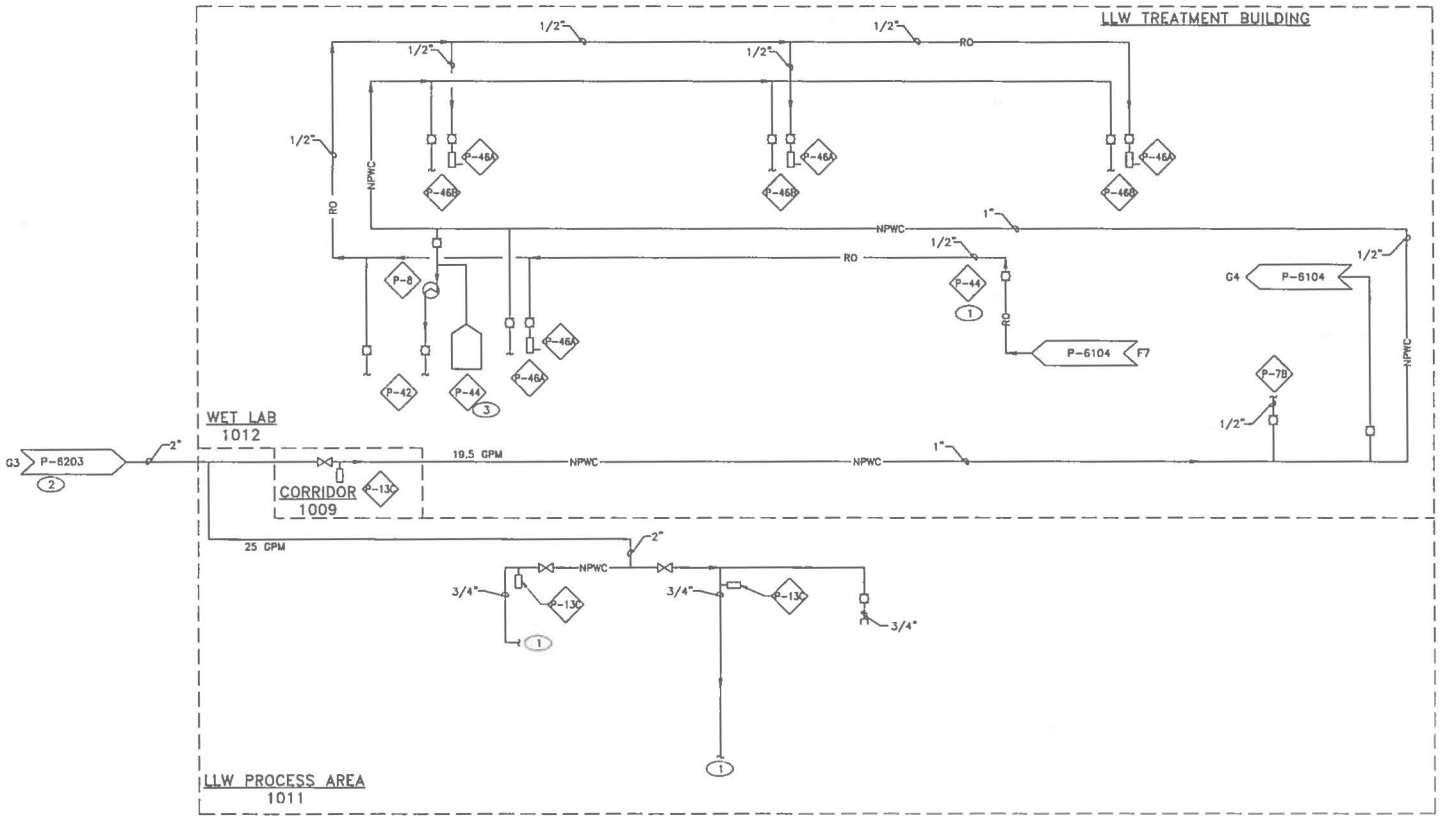

NON-POTABLE WATER FLOW DIAGRAM
SCALE: NONE

NO	DATE	CLASS REV	ADC	DESCRIPTION	DWN	DES	CHKD	SUB	APP

AECOM

RLWTF-UP LOW LEVEL WASTE SUBPROJECT

NON-POTABLE WATER FLOW DIAGRAM

BLDG. 230 TA-50

DRAWN	V DAVISON
DESIGN	S MOORE
CHECKED	C MOYERS
DATE	5/6/14

SUBMITTED: MANNY TARIN
APPROVED FOR RELEASE: ED ARTIGLIA

Los Alamos NATIONAL LABORATORY PO Box 1663 Los Alamos, New Mexico 87545

SHEET P-6101
190 OF 434

CLASSIFICATION | REVIEWER | DATE

PROJECT ID 100761 | DRAWING NO C55864 | REV 0

CHARLES MOYERS NEW MEXICO 18838 LICENSED PROFESSIONAL ENGINEER
05-08-14

File Location: P:\RLWTF LOW-LEVEL WASTE FACILITY\500 CAD\C55864 MAIN BUILDING\SHEETS\13 PLUMBING\55864-P-6101-RD.DWG
Plotted By: MOORE, STEPHEN Plot Date: Monday, May 05, 2014

1 2 2 1 1

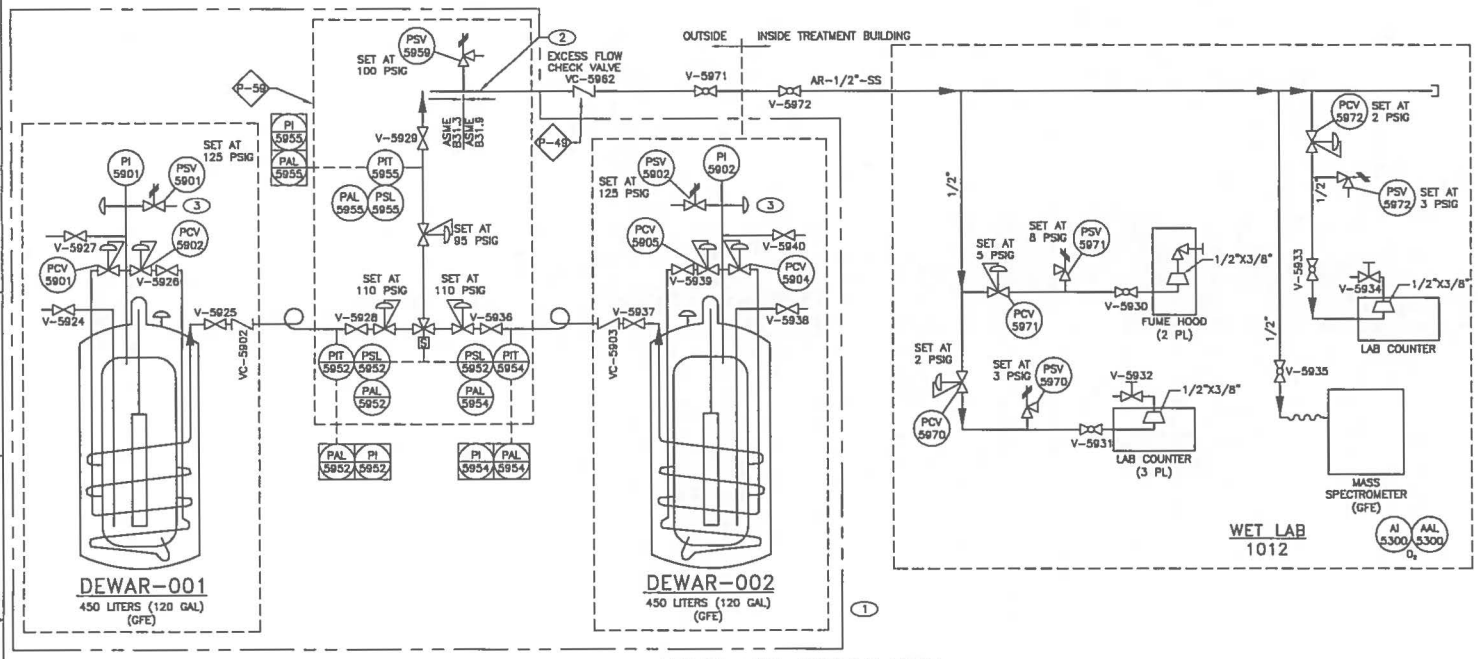

ARGON GAS SUPPLY P&ID
SCALE: NONE

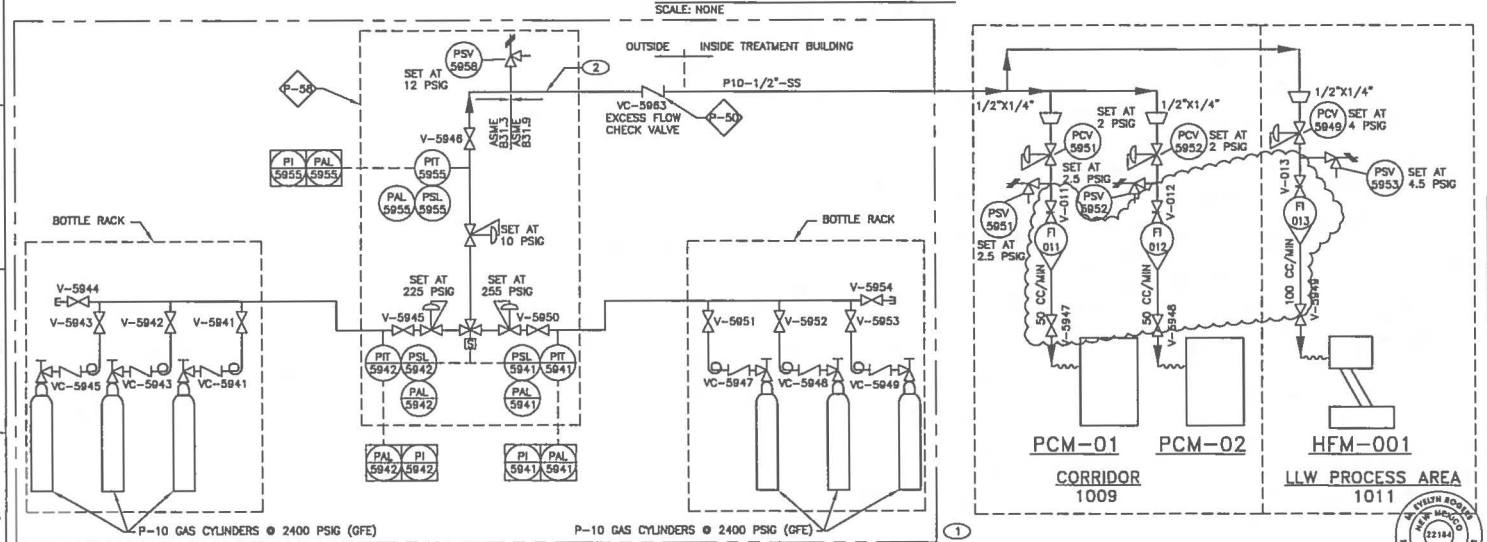

P-10 GAS SUPPLY P&ID
SCALE: NONE

GENERAL NOTES

1. SEE SHEETS P-0001 THROUGH P-0003 FOR LEGEND, ABBREVIATIONS AND GENERAL NOTES.
2. INSTALL AND CONNECT HFM AND FAS PER VENDOR INSTRUCTIONS.
3. FOR PIPE ROUTING, SEE SHEET P-1105.

KEYED NOTES

1. PRESSURE SAFETY BOUNDARY.
2. TRANSITION FROM ASME B31.3 SERVICE TO ASME B31.9 SERVICE.
3. PROTECT PSV DISCHARGE FROM INSECTS AND MOISTURE.

SEQUENCE OF OPERATIONS

ARGON AND P-10 GAS ARE PROVIDED TO THE FACILITY VIA TANKS OR DEWARS OUTSIDE THE FACILITY. A CONTINUOUS SUPPLY IS CONTROLLED BY THE AUTOMATIC SWITCHOVER PANEL THAT AUTOMATICALLY SWITCHES FROM THE DEPLETED GAS SOURCE TO THE AVAILABLE FULL SOURCE. THE SWITCHOVER PANEL INCLUDES A REGULATOR TO MAINTAIN GAS PRESSURE TO THE FACILITY. IN THE EVENT THAT A EXCESS FLOW CONDITION OCCURS SUCH AS A LINE BREAK AN EXCESS FLOW CHECK VALVE WILL CLOSE PREVENTING A FURTHER RELEASE OF GAS INTO THE FACILITY.

"PRIORITY DRAWING"

NO	DATE	CLASS REV	ADC	DESCRIPTION	DWN	DES	CHKD	SUB	APP
1	7/7/14	U		ADDED ROTAMETERS					

AECOM

RLWTF-UP LOW LEVEL WASTE SUBPROJECT

ARGON AND P-10 GAS SUPPLY P&ID

BLDG. 230 TA-50

DRAWN	V DAVISON
DESIGN	S MOORE
CHECKED	C MOYERS
DATE	5/6/14

SUBMITTED: MANNY TARIN
APPROVED FOR RELEASE: ED ARTIGLIA

Los Alamos NATIONAL LABORATORY PO Box 1663 Los Alamos, New Mexico 87545

SHEET P-6102
191 OF 434

CLASSIFICATION | REVIEWER | DATE

PROJECT ID 100761 | DRAWING NO C55864 | REV 1

File Location: W:\RLWTF LOW-LEVEL WASTE FACILITY\500 CAD\C55864 MAIN BUILDING\SHEETS\13 PLUMBING\55864-P-6102-R1.DWG
Plotted By: BRICKMAN, DAVID; Plot Date: Thursday, July 03, 2014

12242

GENERAL NOTES

1. SEE SHEETS P-0001 THROUGH P-0003 FOR LEGEND, ABBREVIATIONS AND GENERAL NOTES.
2. VACUUM PIPING SHALL BE INSTALLED IN ACCORDANCE WITH ASME B31.9.
3. FOR PIPE ROUTING, SEE SHEET P-1105.

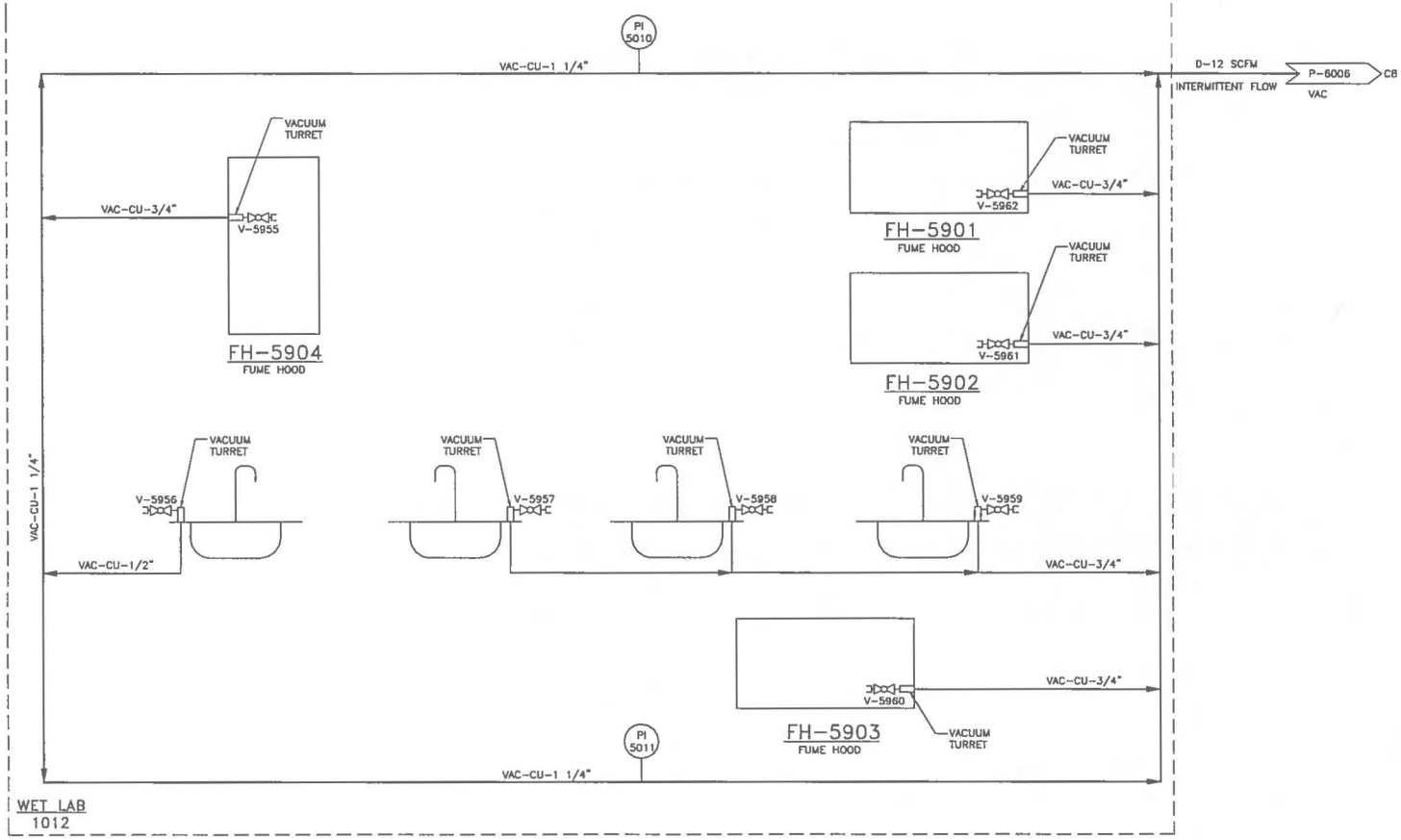

VACUUM SYSTEM P&ID
SCALE: NONE

"PRIORITY DRAWING"

NO	DATE	CLASS REV	ADC	DESCRIPTION	DWN	DES	CHKD	SUB	APP

AECOM

RLWTF-UP LOW LEVEL WASTE SUBPROJECT

VACUUM SYSTEM P&ID

BLDG. 230 TA-50

DRAWN	V DAVISON
DESIGN	S MOORE
CHECKED	C MOYERS
DATE	5/8/14

SUBMITTED MANNY TAREN

APPROVED FOR RELEASE ED ARTIGLIA

Los Alamos NATIONAL LABORATORY PO Box 1663 Los Alamos, New Mexico 87545

SHEET P-6103

192 OF 434

CLASSIFICATION | REVIEWER | DATE

PROJECT ID	DRAWING NO	REV
100761	C55864	0

CHARLES MOYERS NEW MEXICO 15030 REGISTERED PROFESSIONAL ENGINEER
05-01-14

File Location: P:\RLWTF LOW-LEVEL WASTE FACILITY\500 CAD\C55864 MAIN BUILDING\SHEETS\13 PLUMBING\55864-P-6103-R0.DWG
Plotted By: MOORE, STEPHEN Plot Date: Monday, May 05, 2014

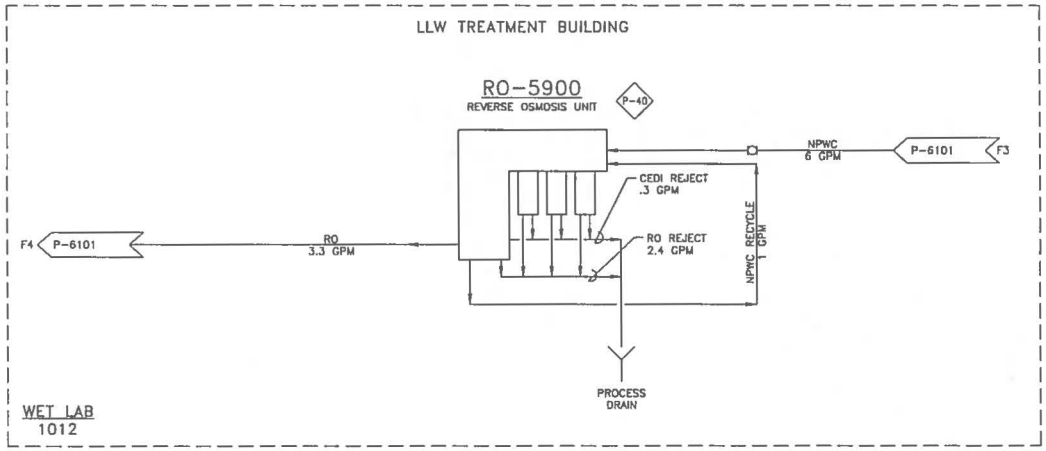

DEIONIZED WATER FLOW DIAGRAM
SCALE: NONE

NO	DATE	CLASS REV	ADC	DESCRIPTION	DWN	DES	CHKD	SUB	APP

AECOM

RLWTF-UP LOW LEVEL WASTE SUBPROJECT

DEIONIZED WATER PROCESS FLOW DIAGRAM

BLDG. 230 TA-50

DRAWN	V DAVISON
DESIGN	S MOORE
CHECKED	C MOYERS
DATE	5/8/14

SUBMITTED: MANNY TARIN

APPROVED FOR RELEASE: ED ARTIGLIA

Los Alamos NATIONAL LABORATORY PO Box 1663 Los Alamos, New Mexico 87545

SHEET P-6104

193 OF 434

CLASSIFICATION | REVIEWER | DATE

PROJECT ID 100761 | DRAWING NO C55864 | REV 0

CHARLES MOYERS NEW MEXICO 18838 LICENSED PROFESSIONAL ENGINEER
05-08-14

File Location: P:\RLWTF LOW-LEVEL WASTE FACILITY\500 CAD\C55864 MAIN BUILDING\SHEETS\13 PLUMBING\55864-P-6104-RO.DWG
Plotted By: MOORE, STEPHEN Plot Date: Monday, May 05, 2014

PLUMBING FIXTURE/EQUIPMENT LIST

ITEM NO	LOCATION ROOM NO	NO REQUIRED	SYMBOL	DESCRIPTION	ROUGH-IN-SIZE WASTE	VENT	PWC	NPWC	PWH	REMARKS	FURNISHED BY
P-1A	MENS 1005	0	P-1A	WATER CLOSET	4"	2"	1"	–	–	BOWL, ASME A112.19.2, WALL HUNG, VITREOUS CHINA, 1-1/2 INCH TOP SPUD; SENSOR OPERATED FLUSH VALVE, ASME A112.18.1, ADA COMPLIANT, MAXIMUM FLOW IS EITHER 1.6 GALLON PER FLUSH VOLUME OR 1.1 GALLON PER FLUSH VOLUME; SEAT, SOLID WHITE PLASTIC, OPEN FRONT, WITHOUT COVER; WALL MOUNTED CARRIER, ASME A112.6.1M, ADJUSTABLE CAST IRON FRAME, ADJUSTABLE SPUD. (SEE SPECIFICATION SECTION 22 4200)	SUBCONTRACTOR
	WOMENS 1006	1									
P-1B	MENS 1005	1	P-1B	WATER CLOSET – HANDICAP	4"	2"	1"	–	–	BOWL, ASME A112.19.2, WALL HUNG, VITREOUS CHINA, 1-1/2 INCH TOP SPUD; SENSOR OPERATED FLUSH VALVE, ASME A112.18.1, ADA COMPLIANT, MAXIMUM FLOW IS EITHER 1.6 GALLON PER FLUSH VOLUME OR 1.1 GALLON PER FLUSH VOLUME; SEAT, SOLID WHITE PLASTIC, OPEN FRONT, WITHOUT COVER; WALL MOUNTED CARRIER, ASME A112.6.1M, ADJUSTABLE CAST IRON FRAME, ADJUSTABLE SPUD. (SEE SPECIFICATION SECTION 22 4200)	SUBCONTRACTOR
	WOMENS 1006	1									
P-2	MENS 1005	1	P-2	URINAL	2"	1-1/2"	3/4"	–	–	URINAL, ASME A112.19.2, WALL HUNG, 3/4 INCH TOP SPUD, 1/2 GALLONS PER FLUSH; SENSOR OPERATED FLUSH VALVE, ASME A112.18.1, MAXIMUM 1/4 GALLON FLUSH VOLUME; WALL MOUNTED CARRIER, ASME A112.6.1M, CAST IRON AND STEEL FRAME WITH TUBULAR LEGS. (SEE SPECIFICATION SECTION 22 4200)	SUBCONTRACTOR
P-3	MENS 1005	2	P-3	LAVATORY – HANDICAP	1-1/2"	1-1/2"	1/2"	–	1/2"	VITREOUS CHINA COUNTERTOP LAVATORY, ASME A112.19.2; 20 1/4 X 17 1/2 INCHES; METERED MIXING FAUCET, ASME A112.18.1, MAXIMUM 0.5 GPM, THERMOSTATIC MIXING VALVE; WALL MOUNTED CARRIER, ASME A112.6.1M, CAST IRON (SEE SPECIFICATION SECTION 22 4200)	SUBCONTRACTOR
	WOMENS 1006	2									
P-4	PROCESS AREA 1011	3	P-4	SAFETY SHOWER/EYEWASH UNIT	–	–	1-1/4"	–	–	PER ANSI Z358.1; FREE STANDING, 8 INCH DIAMETER SHOWER HEAD; EYEWASH, TWIN SPRAY HEADS; 1-1/4 INCH IPS CONNECTIONS. (SEE SPECIFICATION SECTION 22 4200)	SUBCONTRACTOR
	WET LAB	1									
P-4A	MENS 1005	1	P-4A	SHOWER	2"	2"	1/2"	–	1/2"	PER ANSI Z124.2, ADA COMPLIANT; WHEELCHAIR ACCESSIBLE CABINET; 40.25 X 40.25 X 78 INCH HIGH, GRAB BARS; SHOWER VALVE: PRESSURE BALANCED, ANTI-SCALD, MAXIMUM 2.5 GPM FLOW, HAND HELD SHOWER. (SEE SPECIFICATION SECTION 22 4200)	SUBCONTRACTOR
	WOMENS 1006	1									
P-4B	DECON SHOWER 1010	1	P-4B	DECONTAMINATION SHOWER	2"	2"	1/2"	–	1/2"	DECONTAMINATION SHOWER: WALK THROUGH SHOWER, STAINLESS STEEL 36" X 36" X 88" HIGH; TEPID WATER BLENDING; TEMPERATURE RANGE 60 TO 90 °F PER ANSI Z358.1, APPENDIX A. (SEE SPECIFICATION SECTION 22 4200)	SUBCONTRACTOR
P-5	CORRIDOR 1000C	1	P-5	ELECTRIC WATER COOLER	1-1/2"	1 1/4"	1/2"	–	–	HANDICAPPED WALL MOUNTED ELECTRIC, 8 GPH OF 50 °F WATER, UL LISTED IN ACCORDANCE WITH ANSI/NSF 61, SECTION 9. (SEE SPECIFICATION SECTION 22 4200)	SUBCONTRACTOR
P-7A	JAN CLOSET 1003	1	P-7A	SINK, MOP BASIN	3"	1-1/2"	1/2"	–	1/2"	BOWL: 24 X 24 X 10 INCH HIGH, FLOOR MOUNTED. TRIM: ASME A112.18.1 EXPOSED WALL TYPE SUPPLY WITH CROSS HANDLES, SPRING ASSIST NORMALLY CLOSED, SPOUT WALL BRACE, 5 FEET OF 1/2 INCH DIAMETER PLAIN END REINFORCED RUBBER HOSE, MOP HANGER. (SEE SPECIFICATION SECTION 22 4200)	SUBCONTRACTOR
P-7B	CORRIDOR 1009	1	P-7B	SINK, MOP BASIN	3"	1-1/2"	–	1/2"	–	BOWL: 24 X 24 X 10 INCH HIGH, FLOOR MOUNTED. TRIM: ASME A112.18.1 EXPOSED WALL TYPE SUPPLY WITH CROSS HANDLES, SPRING ASSIST NORMALLY CLOSED, SPOUT WALL BRACE, 5 FEET OF 1/2 INCH DIAMETER PLAIN END REINFORCED RUBBER HOSE, MOP HANGER. (SEE SPECIFICATION SECTION 22 4200)	SUBCONTRACTOR
P-8	WET LAB 1012	1	UNDERCOUNTER HOT WATER HEATER (HWE-5900) UNIT NO. HWE-5900 · MANUFACTURER RHEEM · MODEL EGSP10-3 · V/PH/HZ/AMPS 208/1/60/14.4 · GPH AT 100 RISE 12 · HEATING ELEMENT 3 KW · REMARKS WITH GRAINGER 3VU59 DRIP PAN								SUBCONTRACTOR
P-9A	BUILDING EXT/INT	3	P-9A	HOSE BIBS	–	–	1/2"	–	–	3/4" EXPOSED HOSE CONNECTION, PER ASME A112.21.3M (SEE SPECIFICATION SECTION 22 1100)	SUBCONTRACTOR
P-10	WET LAB 1012	1	P-10	FLOOR SINK	2"	–	–	–	–	OPENING SIZE: 12 1/2"x12 1/2"	SUBCONTRACTOR

NO	DATE	CLASS REV	ADC	DESCRIPTION	DWN	DES	CHKD	SUB	APP

AECOM

RLWTF-UP LOW LEVEL WASTE SUBPROJECT

PLUMBING EQUIPMENT LIST

BLDG. 230 TA-50

DRAWN V DAWSON · DESIGN S MOORE · CHECKED C MOYERS · DATE 5/8/14

SUBMITTED MANNY TARIN · APPROVED FOR RELEASE ED ARTIGLIA

Los Alamos NATIONAL LABORATORY PO Box 1663 Los Alamos, New Mexico 87545

SHEET P-7100 · 194 OF 434

CLASSIFICATION · REVIEWER · DATE

PROJECT ID 100761 · DRAWING NO C55864 · REV 0

CHARLES MOYERS 15839 REGISTERED PROFESSIONAL ENGINEER 05-09-14

Sh221

File Location: P:\RLWTF LOW-LEVEL WASTE FACILITY\503 CAD\C55864 MAIN BUILDING\SHEETS\13 PLUMBING\C55864-P-7100-R0.DWG
Plotted By: MOORE, STEPHEN Plot Date: Monday, May 05, 2014

PLUMBING FIXTURE/EQUIPMENT LIST (CONTINUED)

P-11A	1012 1009 1005 1006 VAC PUMP RM FIRE RISER RM	4 2 1 1 1 1	P-11A	FLOOR DRAIN	2"	–	–	–	–	ASME A112.6.3, 2 IN. DIAMETER DRAIN, CAST-IRON GRATE, DOUBLE-DRAINAGE FLANGE, REVERSIBLE-CLAMPING COLLAR, ADJUSTABLE NICKEL-BRONZE STRAINER (SEE SPECIFICATION SECTION 22 1316)	SUBCONTRACTOR
P-11B		AR	P-11B	TRENCH DRAIN, FIRE WATER DRAINAGE	–	–	–	–	–	TRENCH DRAIN PER ASME A112.6.3: 1.0 PERCENT% PRE-SLOPED, 4 IN. NOMINAL INSIDE WIDTH, POLYESTER RESIN POLYMER CONCRETE. MINIMUM INVERT DEPTH 6.02 IN. DRAIN AND GRATE LOAD CLASS E. (SEE SPECIFICATION SECTION 22 1413)	SUBCONTRACTOR
P-13A	1003, 1009, 1010, 1011, 1012	5	P-13A	HAMMER ARRESTER	–	–	1/2"	–	–	COMPLY WITH ASSE 1010 OR PDI-WH 201, AND ASME A112.26.1M. COPPER BODY, PRECHARGED. (SEE SPECIFICATION SECTION 22 1100)	SUBCONTRACTOR
P-13B	CORRIDOR 1009, WET LAB 1012	4	P-13B	HAMMER ARRESTER	–	–	–	1/2"	–	COMPLY WITH ASSE 1010 OR PDI-WH 201, AND ASME A112.26.1M. COPPER BODY, PRECHARGED. (SEE SPECIFICATION SECTION 22 1100)	SUBCONTRACTOR
P-13C	JAN CLOSET 1003	4	P-13C	HAMMER ARRESTER	–	–	–	–	1/2"	COMPLY WITH ASSE 1010 OR PDI-WH 201, AND ASME A112.26.1M. COPPER BODY, PRECHARGED. (SEE SPECIFICATION SECTION 22 1100)	SUBCONTRACTOR
				CLEANOUT, WALL						ASME A112.36.2M, CAST-IRON, NICKEL-BRONZE COVER WITH THREADED SPANNER WRENCH COVER. (SEE SPECIFICATION SECTION 22 1316)	
				CLEANOUT, FLOOR						ASME A112.36.2M, CAST-IRON, NICKEL-BRONZE COVER WITH THREADED SPANNER WRENCH COVER. (SEE SPECIFICATION SECTION 22 1316)	
				OVERFLOW ROOF DRAIN						ASME A112.6.4, CAST-IRON BODY, FLASHING CLAMP, GRAVEL STOP, PVC STANDPIPE AND POLYETHYLENE DOME. (SEE SPECIFICATION SECTION 22 1413)	
				SINK, COUNTER TOP MOUNTED, SINGLE COMPARTMENT						SINGLE COMPARTMENT BOWL, ASME A112.19.3, 25 X 21 1/4 X 10 INCH; 1-1/2 INCH DRAIN; TRIM, ASME A112.18.1, CHROME PLATED BRASS SUPPLY WITH RIGID/SWING SPOUT WITH SPRING RETURN HANDLE.(SEE SPECIFICATION SECTION 22 4200)	
				SAFETY EYEWASH, COUNTER TOP MOUNTED						SINK MOUNTED EYE/FACE WASH WITH ABS EYE/FACE WASH HEADS, 1/2"	

NO	DATE	CLASS REV	ADC	DESCRIPTION	DWN	DES	CHKD	SUB	APP

AECOM

RLWTF-UP LOW LEVEL WASTE SUBPROJECT

PLUMBING EQUIPMENT LIST

BLDG. 230 TA-50

DRAWN	V DAVISON
DESIGN	S MOORE
CHECKED	C MOYERS
DATE	5/8/14

SUBMITTED MANNY TARIN

APPROVED FOR RELEASE ED ARTIGLIA

Los Alamos NATIONAL LABORATORY PO Box 1663 Los Alamos, New Mexico 87545

SHEET P-7101

195 OF 434

CLASSIFICATION | REVIEWER | DATE

PROJECT ID 100761 | DRAWING NO C55864 | REV 0

CHARLES MOYERS NEW MEXICO 15638 LICENSED PROFESSIONAL ENGINEER

05-08-14

File Location: P:\RLWTF LOW-LEVEL WASTE FACILITY\500 CAD\C55864 MAIN BUILDING\SHEETS\13 PLUMBING\55864-P-7101-R0.DWG
Plotted By: MOORE, STEPHEN Plot Date: Monday, May 05, 2014

: 12245

PLUMBING EQUIPMENT LIST

ITEM NO.	LOCATION ROOM NO.	NO. REQUIRED	DESCRIPTION, MANUFACTURER OR APPROVED EQUAL — ALL EQUIPMENT SIZED FOR OPERATION AT 7500 FT. ELEVATION	FURNISHED BY
P-28	VACUUM ROOM	1	VACUUM PUMP SKID, PV-5001 UNIT NO. PV-5001 · MANUFACTURER BECKER · MODEL TS185L4 · AIRFLOW 82 SCFM · VACUUM 12" HG · HP (3)5 · RECEIVER GAL 240 · VOLTAGE 460 · PHASE 3 · HZ 60 · WEIGHT 3,200 LB · SPECIFICATION 43 1129	SUBCONTRACTOR
P-29	VACUUM ROOM	1	VACUUM PUMP SKID, PV-5002 UNIT NO. PV-5002 · MANUFACTURER BECKER · MODEL ST100L3 · AIRFLOW 12 SCFM · VACUUM 19" HG · HP 5 · RECEIVER GAL 120 · VOLTAGE 460 · PHASE 3 · HZ 60 · WEIGHT 950 LB · SPECIFICATION 22 8219	SUBCONTRACTOR
P-36	PROCESS AREA 1011	1	SAFETY SHOWER PRESSURE BOOSTER PUMP, (PPB-5612) UNIT NO: PPB-5612 · MANUFACTURER: GRUNDFOS · MODEL: CRE-10-2 · FLOW RATE GPM: 64 · HEAD FT: 23.1 · CONNECTION: FNPT · SIZE: 2" · MOTOR HP: 1 1/2 · V/PH/Hz: 480/3/60 · FLA: 2.15 · REMARKS: PACKAGED SINGLE PUMP VARIABLE SPEED PUMPING SYSTEM. CONTROL TO CONSTANT PRESSURE, 50 PSIG WITH INTEGRATED VARIABLE FREQUENCY DRIVE. UL-LISTED, ANSI/NSF 61 APPROVED.	SUBCONTRACTOR
P-37	PROCESS AREA 1011	1	EXPANSION TANK, (TX-5613) UNIT NO: TX-5613 · MANUFACTURER: AMTROL · MODEL: ST-5-C · TANK VOLUME: 2.1 (GAL) · ACCEPTANCE VOLUME: .9 (GAL) · INITIAL CHARGE: 42 PSIG · WORKING PRESSURE: 125 PSIG · REMARKS: ASME SECTION VIII, DIV 1, ANSI/NSF 61 APPROVED, NBIC NUMBERED AND REGISTERED SEISMIC CLIPS	SUBCONTRACTOR
P-38	PROCESS AREA 1011	1	PRESSURE RELIEF VALVE, (PSV-5614) UNIT NO: PSV-5614 · MANUFACTURER: KUNKLE · MODEL: 912BFEM01-JED075 · FLUID: WATER · CONNECTION: MNPT X FNPT · INLET SIZE: 1" · OUTLET SIZE: 1 1/2" · PRESSURE SETTING: 75 PSIG · CAPACITY: 83 GPM · ORIFICE AREA: 0.3369 SQ IN	SUBCONTRACTOR
P-39	PROCESS AREA 1011 & WET LAB 1012	4	TEMPERATURE AND PRESSURE RELIEF VALVE, (PSV-5601, PSV-5602, PSV-5608 & PSV-5611) MANUFACTURER: WATTS · MODEL: LF40XL-7 · FLUID: WATER · CONNECTION: MNPT X FNPT · INLET SIZE: 1" · OUTLET SIZE: 1" · PRESSURE SETTING: 75 PSIG · CAPACITY: 500,000 BTU/HR · TEMPERATURE SETTING: 210 °F	SUBCONTRACTOR
P-40	WET LAB 1012	1	REVERSE OSMOSIS UNIT (RO-5600) UNIT NO: RO-5600 · MANUFACTURER: SIEMENS · MODEL: PROTEGRA CS PROTC7508 · V/PH/HZ/AMPS: 208/1/60/11.5	SUBCONTRACTOR
P-41	INSIDE BUILDING	3	ROTAMETER (FI-011, FI-012, FI-013) UNIT NO: FI-011, FI-012, FI-013 · MANUFACTURER: SWAGELOK · MODEL: VAF-03-01M-1-D-GHJX · COMPONENT SIZE: 1/4" · RANGE: 0 - 133 CC/MIN	SUBCONTRACTOR

NO	DATE	CLASS REV	ADC	DESCRIPTION	DRWN	DES	CHKD	SUB	APP
1	7/7/14	U		ADDED ROTAMETER	VD	MM	SM	MT	

ACCOM

RLWTF-UP LOW LEVEL WASTE SUBPROJECT

PLUMBING EQUIPMENT LIST

BLDG. 230 TA-50

DRAWN V DAVISON · DESIGN S MOORE · CHECKED C MOYERS · DATE 5/8/14

SUBMITTED MANNY TARIN · APPROVED FOR RELEASE ED ARTIGLIA

Los Alamos NATIONAL LABORATORY PO Box 1663 Los Alamos, New Mexico 87545

SHEET P-7102 · 196 OF 434

CLASSIFICATION · REVIEWER · DATE

PROJECT ID 100761 · DRAWING NO C55864 · REV 1

M. EVELYN BORREGO NEW MEXICO 23184 REGISTERED PROFESSIONAL ENGINEER 7-7-14

File Location: M:\RLWTF LOW-LEVEL WASTE FACILITY\300 CAD\CS5864 MAIN BUILDING\SHEETS\13 PLUMBING\S5864-P-7102-R1.DWG
Plotted By: BROZOWSKI, SHELDEQ Plot Date: Thursday, July 03, 2014

12227

PLUMBING EQUIPMENT LIST (CONTINUED)

ITEM NO.	LOCATION ROOM NO.	NO. REQUIRED	DESCRIPTION, MANUFACTURER OR APPROVED EQUAL — ALL EQUIPMENT SIZED FOR OPERATION AT 7500 FT. ELEVATION	FURNISHED BY
P-42	WET LAB 1012	1	DISHWASHER MANUFACTURER: LABCONCO; MODEL: 4420330; V/PH/HZ/AMPS: 115/1/60/16	SUBCONTRACTOR
P-44	WET LAB 1012	1	EXPANSION TANK (TX-5912) UNIT NO.: TX-5912; MANUFACTURER: AMTROL; MODEL: ST-5-C; TANK VOLUME: 2.1 (GAL); ACCEPTANCE VOLUME: 0.9 (GAL); INITIAL CHARGE: 40 PSIG; WORKING PRESSURE: 150 PSIG; REMARKS: ASME SECTION VIII, DIV. 1, ANSI/NSF 61 APPROVED, NBIC NUMBERED AND REGISTERED	SUBCONTRACTOR
P-45	WET LAB 1012	1	DISHWASHER AIR GAP MANUFACTURER: AIR GAP INTERNATIONAL; MODEL: MODEL 52; REMARKS: AIR GAP FOR DISHWASHER, CHROME CAP	SUBCONTRACTOR
P-46A	WET LAB 1012	4	LABORATORY FAUCET RO WATER MANUFACTURER: CHICAGO FAUCET; MODEL: 980-W909AGVCP W/979K SHANK; REMARKS: SINK MOUNTED TURRET WITH SHANK AND BALL VALVE.	SUBCONTRACTOR
P-46B	WET LAB 1012	4	LABORATORY FAUCET NON-POTABLE WATER MANUFACTURER: CHICAGO FAUCET; MODEL: 980-WS09AGVCP W/979K SHANK; REMARKS: SINK MOUNTED TURRET WITH SHANK AND BALL VALVE.	SUBCONTRACTOR
P-47	WET LAB 1012	17	LABORATORY FAUCET VACUUM, GAS MANUFACTURER: CHICAGO FAUCET; MODEL: 980-WS09AGVCP W/979K SHANK; REMARKS: COUNTER MOUNTED TURRET WITH SHANK AND BALL VALVE.	SUBCONTRACTOR
P-49	OUTDOORS	1	AR EXCESS FLOW CHECK VALVE (VC-5962) UNIT NO.: VC-5962; MANUFACTURER: SWAGELOK; MODEL: SS-XSS8-BU; SPRING KIT: MS-13K-XS8	SUBCONTRACTOR
P-50	OUTDOORS	1	P-10 EXCESS FLOW CHECK VALVE (VC-5963) UNIT NO.: VC-5963; MANUFACTURER: SWAGELOK; MODEL: SS-XSS8-BU; SPRING KIT: MS-13K-XS8	SUBCONTRACTOR
P-52	CORRIDOR 1009	1	ELECTRIC TRAP PRIMER VALVE WITH DISTRIBUTION UNIT UNIT NO.: TP-5901; MANUFACTURER: PRECISION PLUMBING PRODUCTS; MODEL: PTS-6; REMARKS: PRESET 24HR CLOCK, 24V/220V SOLENOID VALVE, 120V/220V 3-WIRE CONNECTION	SUBCONTRACTOR
P-53	VAC PUMP ROOM FIRE RISER ROOM	1 1	2" FLOOR DRAIN TRAP SEAL MANUFACTURER: SURE-SEAL MANUFACTURING; MODEL: SS2009L; GASKET: GASKET TO MATCH FLOOR DRAIN MODEL	SUBCONTRACTOR

NO	DATE	CLASS REV	ADC	DESCRIPTION	DWN	DES	CHKD	SUB	APP

AECOM

RLWTF-UP LOW LEVEL WASTE SUBPROJECT

PLUMBING EQUIPMENT LIST

BLDG. 230 TA-50

DRAWN	V DAVISON
DESIGN	S MOORE
CHECKED	C MOYERS
DATE	5/8/14

SUBMITTED: MANNY TARIN

APPROVED FOR RELEASE: ED ARTIGLIA

Los Alamos NATIONAL LABORATORY PO Box 1663 Los Alamos, New Mexico 87545

SHEET P-7103

197 OF 434

CLASSIFICATION | REVIEWER | DATE

PROJECT ID 100761 | DRAWING NO C55864 | REV 0

CHARLES MOYERS NEW MEXICO 16838 LICENSED PROFESSIONAL ENGINEER

05-08-14

File Location: P:\RLWTF LOW-LEVEL WASTE FACILITY\500 CAD\C55864 MAIN BUILDING\SHEETS\13 PLUMBING\55864-P-7103-R0.DWG
Plotted By: MOORE, STEPHEN Plot Date: Monday, May 05, 2014

: 12248

PLUMBING EQUIPMENT LIST (CONTINUED)

ITEM NO.	LOCATION ROOM NO.	NO. REQUIRED	DESCRIPTION, MANUFACTURER OR APPROVED EQUAL — ALL EQUIPMENT SIZED FOR OPERATION AT 7500 FT. ELEVATION	FURNISHED BY
P-54	CORRIDOR 1009	1	36"ø DUPLEX SUMP BASIN (BE) UNIT NO.: PS-5700; MANUFACTURER: ZOELLER PUMP CO.; BASIN MODEL: 31-0047; PUMP(S) MODEL: E161; ALARM MODEL: 10-0028; CHECK VALVE MODEL: 30-0164; RAIL & DISCHARGE MODEL: 39-0085; ELECTRICAL: 208V/I PH/1/2HP	SUBCONTRACTOR
P-55	PROCESS AREA 1011	1	4'-0"X4'-0"X5'-0" PRECAST SUMP W/ COVER MANUFACTURER: ACO; REMARKS: VINYL ESTER FIBERGLASS	SUBCONTRACTOR
P-56	CORRIDOR 1009	1	4'-0"X4'-0"X4'-0" PRECAST SUMP W/ COVER MANUFACTURER: ACO; REMARKS: POLYMER CONCRETE	SUBCONTRACTOR
	WET LAB 1012	1		
P-57	CORRIDOR 1009	1	HEPA FILTER CARTRIDGE MANUFACTURER: FLANDERS; MODEL: 0-007-C-15-N1-NU-00-22-Z03010B	SUBCONTRACTOR
P-58	OUTSIDE NORTH WALL	1	FULLY AUTOMATIC MANIFOLD/CHANGE OVER GAS MONITOR PANEL (ARGON) MANUFACTURER: AIRGAS; MODEL: Y11-SL1205080; OPTIONS: Y78-RW12VK; REMARKS: PROVIDE WITH OPTIONAL BLOCK AND BLEED ASSEMBLY.	SUBCONTRACTOR
P-59	OUTSIDE NORTH WALL	1	FULLY AUTOMATIC MANIFOLD/CHANGE OVER GAS MONITOR PANEL(P-10) MANUFACTURER: AIRGAS; MODEL: Y11-CP180R350; OPTIONS: Y78-RW12VK; REMARKS: PROVIDE WITH OPTIONAL BLOCK AND BLEED ASSEMBLY.	SUBCONTRACTOR
P-60	CORRIDOR 1009	1	BUTTERFLY VALVE ASSEMBLY MANUFACTURER: BRAY; MODEL: 31-0800-11010-124; ACTUATOR: 93-1604-11300-532; REMARKS: BODY STYLE – LUG; BUBBLE TIGHT SHUTOFF TO 175 PSI; BODY CWP-250 PSI	SUBCONTRACTOR
	WET LAB 1012	1		
	PROCESS AREA 1011	1		
P-61	CORRIDOR 1009	1	SOLENOID VALVE UNIT NO.: SOV-5501, SOV-5502, SOV-5503; MANUFACTURER: ASCO; MODEL: 8321G1-120AC; REMARKS: BRASS BODY; MAXIMUM OPERATING PRESSURE 200 PSI; 1/4" INLET/OUTLET NORMALLY CLOSED, QUICK EXHAUST	SUBCONTRACTOR
	WET LAB 1012	1		
	PROCESS AREA 1011	1		

NO	DATE	CLASS REV	ADC	DESCRIPTION	DWN	DES	CHKD	SUB	APP

AECOM

RLWTF-UP LOW LEVEL WASTE SUBPROJECT

PLUMBING EQUIPMENT LIST

BLDG. 230 TA-50

DRAWN	V DAVISON
DESIGN	S MOORE
CHECKED	C MOYERS
DATE	5/8/14

SUBMITTED: MANNY TARIN

APPROVED FOR RELEASE: ED ARTIGLIA

Los Alamos NATIONAL LABORATORY PO Box 1663 Los Alamos, New Mexico 87545

SHEET P-7104

198 OF 434

CLASSIFICATION | REVIEWER | DATE

PROJECT ID 100761 | DRAWING NO C55864 | REV 0

CHARLES MOYERS NEW MEXICO 18838 LICENSED PROFESSIONAL ENGINEER

05-08-14

File Location: P:\RLWTF LOW-LEVEL WASTE FACILITY\500 CAD\C55864 MAIN BUILDING\SHEETS\13 PLUMBING\55864-P-7104-R0.DWG
Plotted By: MOORE, STEPHEN Plot Date: Monday, May 05, 2014

12219

GENERAL NOTES

1. SEE SHEETS P-0001 THROUGH P-0003 FOR LEGEND, ABBREVIATIONS AND GENERAL NOTES.

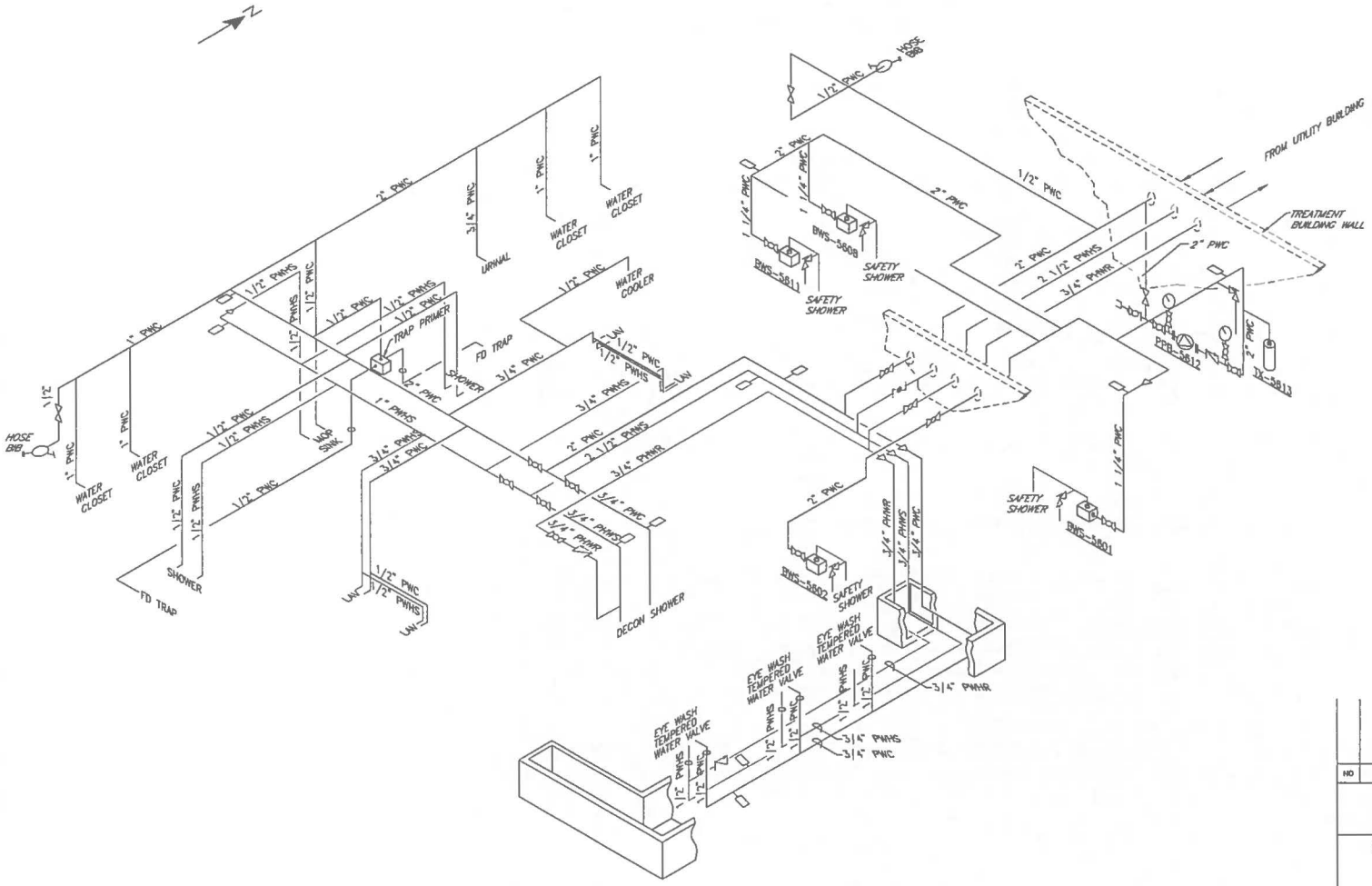

POTABLE WATER RISER DIAGRAM

SCALE: NONE

NO	DATE	CLASS REV	ADC	DESCRIPTION	DWN	DES	CHKD	SUB	APP

AECOM

RLWTF-UP LOW LEVEL WASTE SUBPROJECT

POTABLE WATER RISER DIAGRAM

DRAWN	W U V DAWSON
DESIGN	S MOORE
CHECKED	C MOYERS
DATE	5/8/14

BLDG. 230 TA-50

SUBMITTED MANNY TARIN

APPROVED FOR RELEASE ED ARTIGLIA

Los Alamos NATIONAL LABORATORY PO Box 1663 Los Alamos, New Mexico 87545

SHEET P-9101

199 OF 434

CLASSIFICATION REVIEWER DATE

PROJECT ID 100761

DRAWING NO C55864

REV 0

05-01-14

CHARLES MOYERS NEW MEXICO 16839 REGISTERED PROFESSIONAL ENGINEER

65221 :

File Location: P:\RLWTF LOW-LEVEL WASTE FACILITY\500 CAD\C55864 MAIN BUILDING\SHEETS\13 PLUMBING\55864-P-9101-R0.DWG
Plotted By: MOORE, STEPHEN Plot Date: Monday, May 05, 2014

GENERAL NOTES

1. SEE SHEETS P-0001 THROUGH P-0003 FOR LEGEND, ABBREVIATIONS AND GENERAL NOTES.

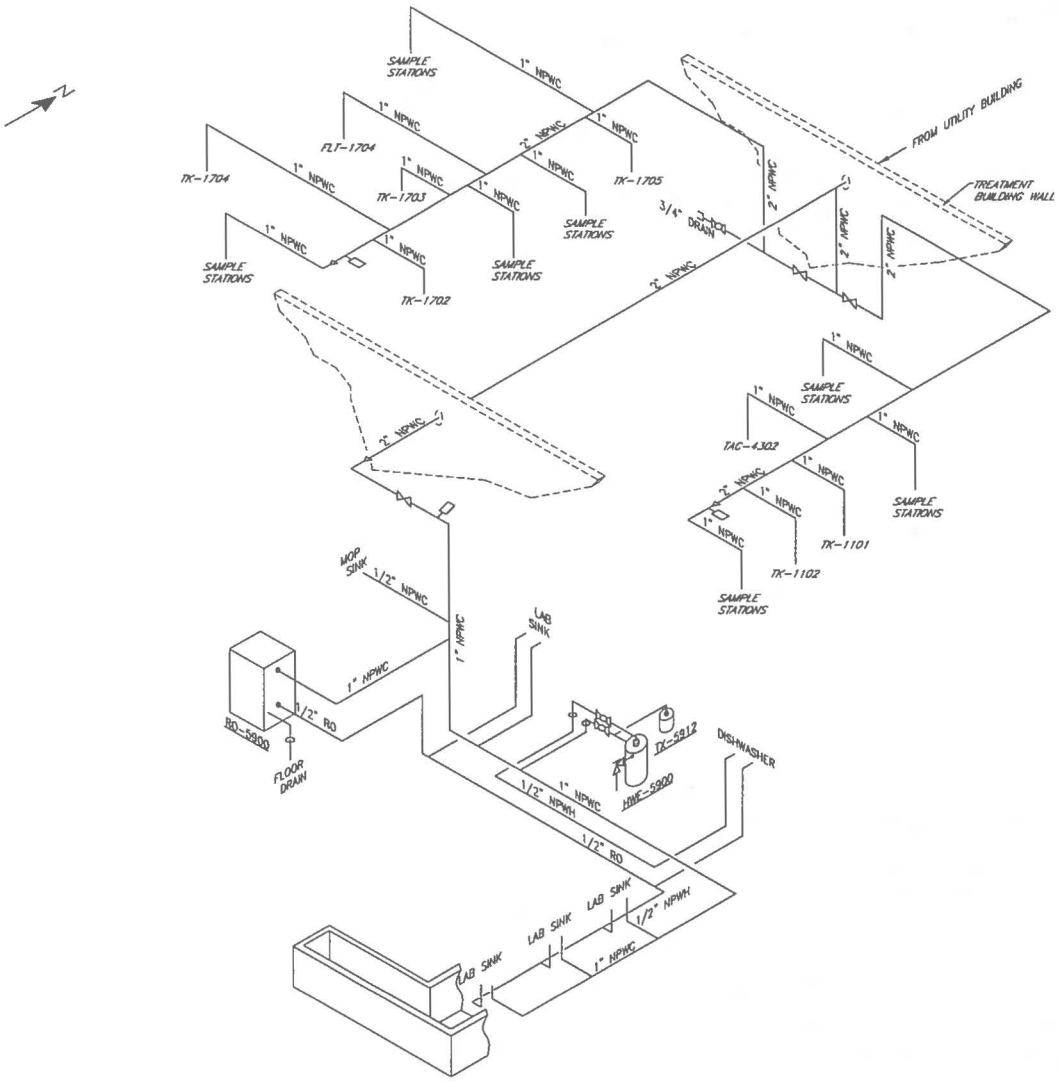

NON-POTABLE WATER RISER DIAGRAM
SCALE: NONE

NO	DATE	CLASS REV	ADC	DESCRIPTION	DWN	DES	CHKD	SUB	APP

AECOM

RLWTF-UP LOW LEVEL WASTE SUBPROJECT

NON-POTABLE WATER RISER DIAGRAM

BLDG. 230 TA-50

DRAWN	V DAVISON
DESIGN	S MOORE
CHECKED	C MOYERS
DATE	5/8/14

SUBMITTED MANNY TARIN

APPROVED FOR RELEASE ED ARTIGLIA

Los Alamos NATIONAL LABORATORY PO Box 1663 Los Alamos, New Mexico 87545

SHEET P-9102

200 OF 434

CLASSIFICATION | REVIEWER | DATE

PROJECT ID 100761 | DRAWING NO C55864 | REV 0

CHARLES MOYERS NEW MEXICO 16030 REGISTERED PROFESSIONAL ENGINEER
05-01-14

12251

GENERAL NOTES

1. SEE SHEETS P-0001 THROUGH P-0003 FOR LEGEND, ABBREVIATIONS AND GENERAL NOTES.

KEYED NOTES

(1) SANITARY WASTE LINE TO BE ROUTED BELOW SLAB.

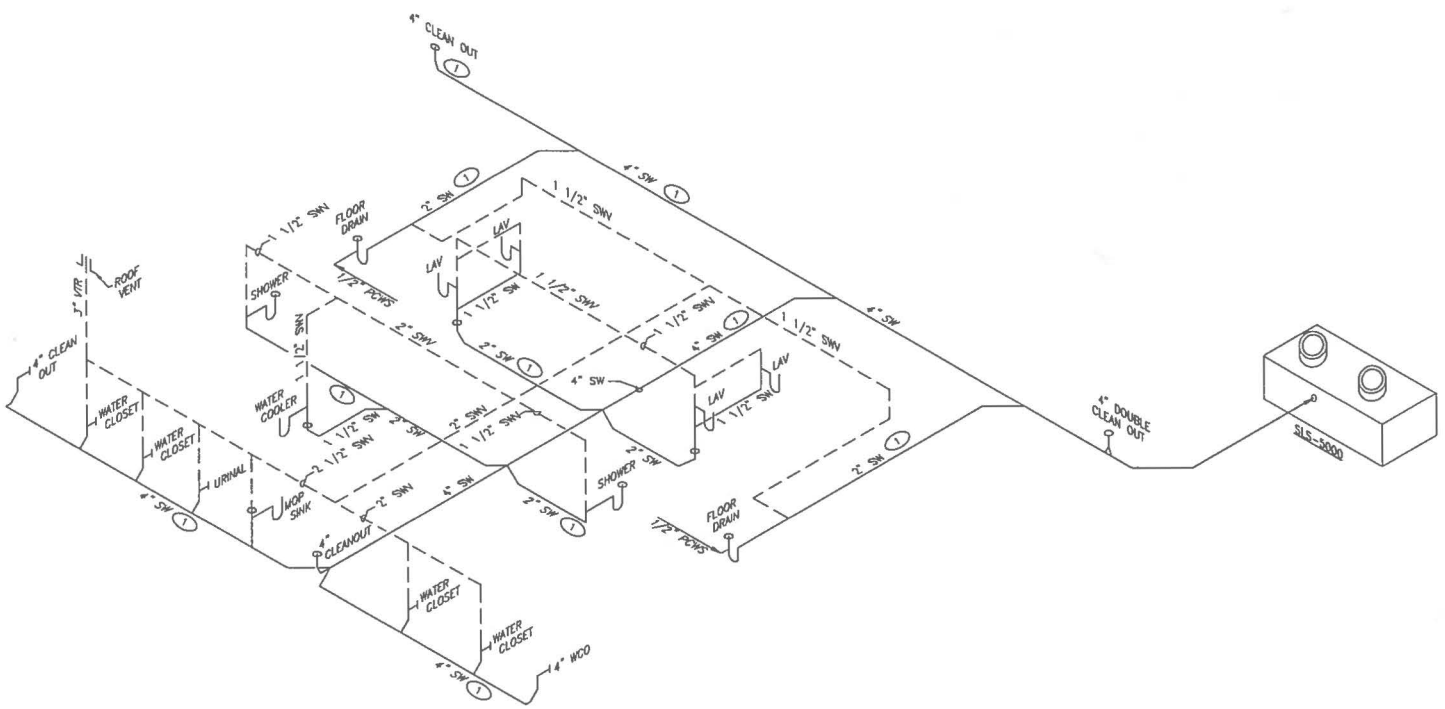

WASTE/VENT RISER DIAGRAM
SCALE: NONE

NO	DATE	CLASS REV	ADC	DESCRIPTION	DWN	DES	CHKD	SUB	APP

AECOM

RLWTF-UP LOW LEVEL WASTE SUBPROJECT

WASTE/VENT RISER DIAGRAM

DRAWN	V DAVISON
DESIGN	S MOORE
CHECKED	C MOYERS
DATE	5/8/14

BLDG. 230 TA-50

SUBMITTED MANNY TARIN

APPROVED FOR RELEASE ED ARTIOLIA

Los Alamos NATIONAL LABORATORY PO Box 1663 Los Alamos, New Mexico 87545

SHEET P-9103

201 OF 434

CLASSIFICATION | REVIEWER | DATE

PROJECT ID 100761 | DRAWING NO C55864 | REV 0

CHARLES MOYERS NEW MEXICO 10838 REGISTERED PROFESSIONAL ENGINEER
05-01-14

File Location: P:\RLWTF LOW-LEVEL WASTE FACILITY\300 CAD\C55864 MAIN BUILDING\SHEETS\13 PLUMBING\C55864-P-9103-R0.DWG
Plotted By: MOORE, STEPHEN Plot Date: Monday, May 05, 2014

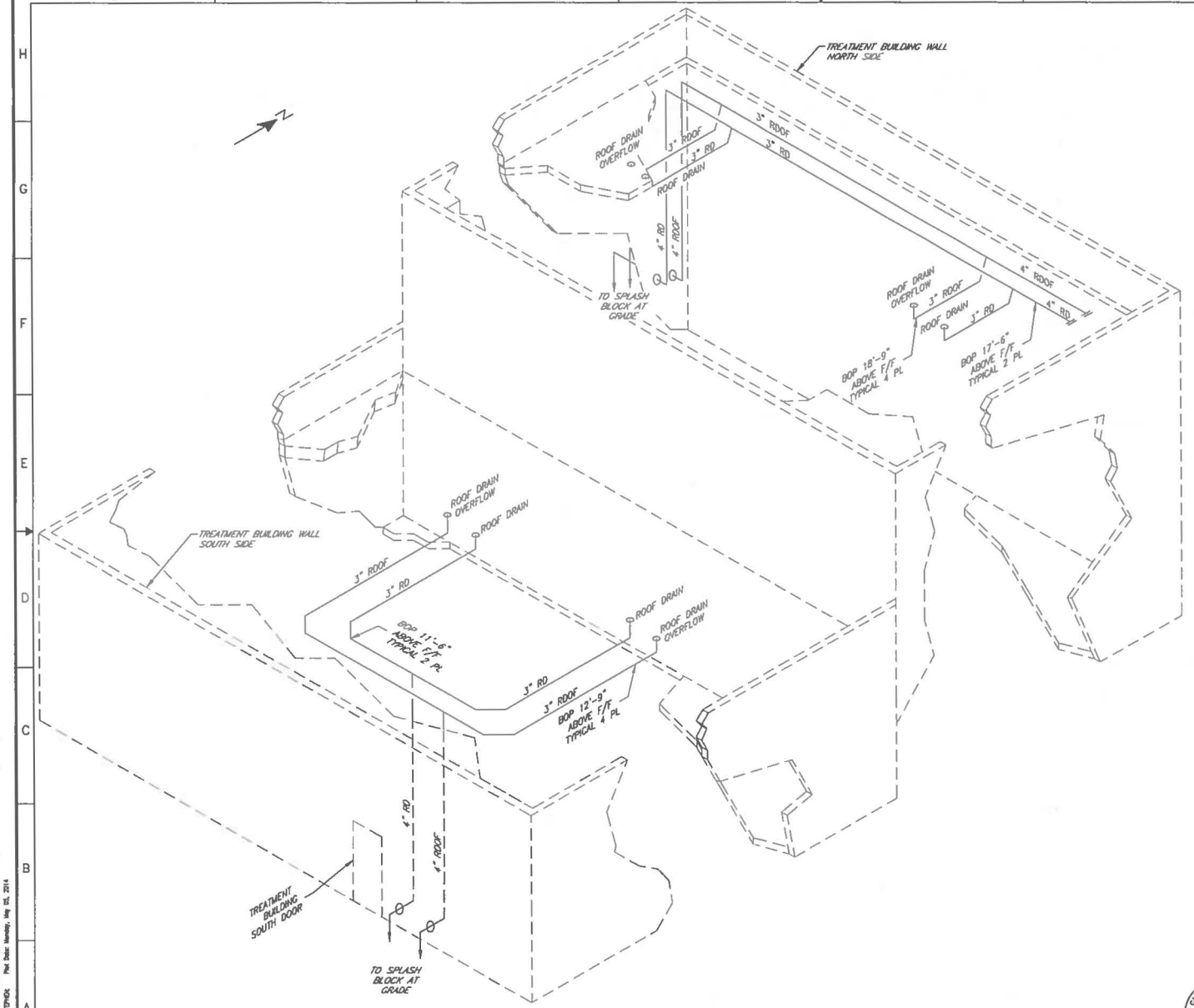

ROOF DRAIN RISER DIAGRAM
SCALE: NONE

GENERAL NOTES

1. SEE SHEETS P-0001 THROUGH P-0003 FOR LEGEND, ABBREVIATIONS AND GENERAL NOTES.
2. ROOF DRAIN PIPING ELEVATIONS ARE APPROXIMATE. SLOPE DRAIN LINE AS REQUIRED TO OUTLET.

NO	DATE	CLASS REV	ADC	DESCRIPTION	DWN	DES	CHKD	SUB	APP

AECOM

RLWTF-UP LOW LEVEL WASTE SUBPROJECT

ROOF DRAIN RISER DIAGRAM

DRAWN: V DAVISON
DESIGN: S MOORE
CHECKED: C MOYERS
DATE: 5/8/14

BLDG. 230 TA-50

SUBMITTED: MANNY TARIN
APPROVED FOR RELEASE: ED ARTIGUA

Los Alamos NATIONAL LABORATORY
PO Box 1663 Los Alamos, New Mexico 87545

SHEET: P-9104
202 OF 434

CLASSIFICATION | REVIEWER | DATE

PROJECT ID: 100761
DRAWING NO: C55864
REV: 0

05-01-14

ESQD:
File Location: P:\RLWTF LOW-LEVEL WASTE FACILITY\300 CAD\C55864 MAIN BUILDING\SHEETS\13 PLUMBING\C55864-P-9104-100.DWG
Plotted By: MOORE, STEPHEN Plot Date: Monday, May 05, 2014

GENERAL NOTES

1. SEE SHEETS P-0001 THROUGH P-0003 FOR LEGEND, ABBREVIATIONS AND GENERAL NOTES.

KEYED NOTES

1. LAB WASTE LINE TO BE ROUTED BELOW SLAB.
2. FIRE WATER DRAIN LINE TO TA-50 STORAGE TANKS.
3. LINE RUN UNDER SLAB TO BUILDING SUMPS.

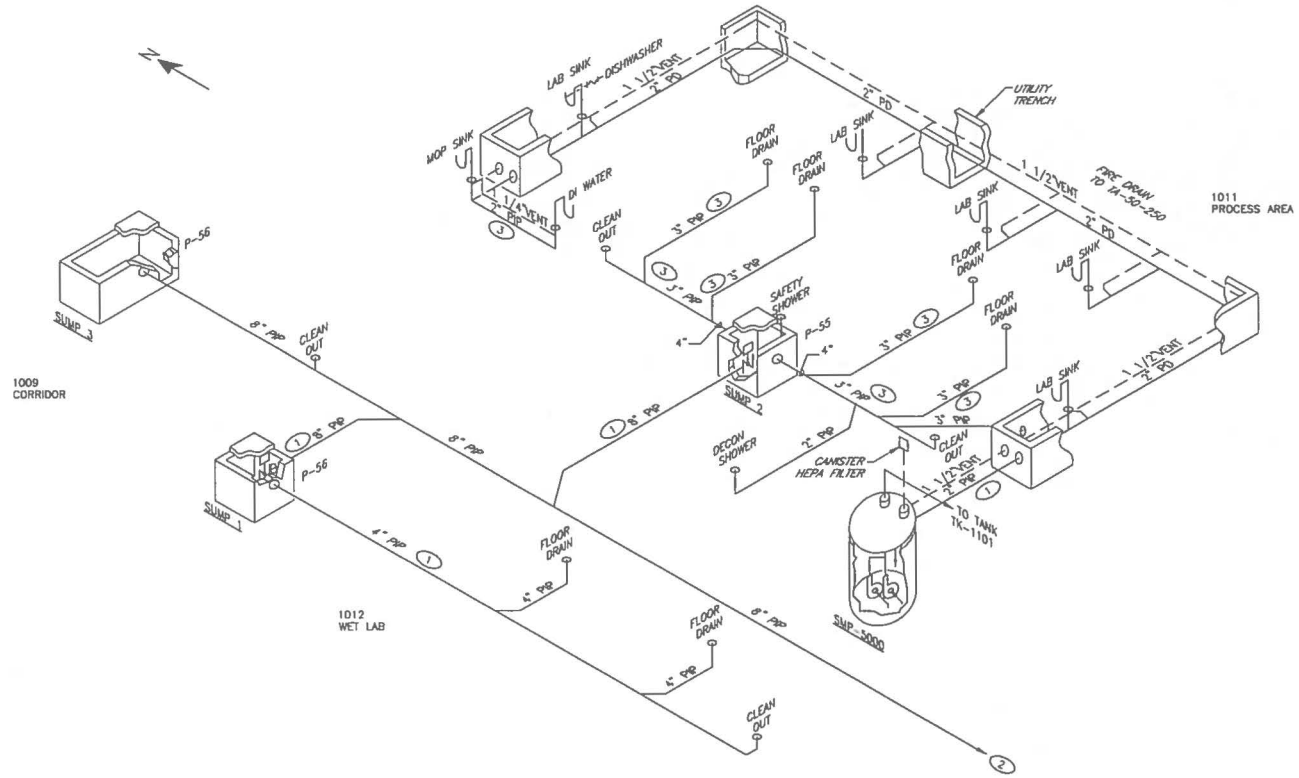

LAB WASTE RISER DIAGRAM

SCALE: NONE

NO	DATE	CLASS REV	ADC	DESCRIPTION	DWN	DES	CHKD	SUB	APP

AECOM

RLWTF-UP LOW LEVEL WASTE SUBPROJECT

LAB WASTE WATER RISER DIAGRAM

DRAWN	V DAVISON
DESIGN	S MOORE
CHECKED	C MOYERS
DATE	5/8/14

BLDG. 230 TA-50

SUBMITTED MANNY TARIN

APPROVED FOR RELEASE ED ARTIGLIA

Los Alamos NATIONAL LABORATORY PO Box 1663 Los Alamos, New Mexico 87545

SHEET P-9105

203 OF 434

CLASSIFICATION REVIEWER DATE

PROJECT ID 100761

DRAWING NO C55864

REV 0

05-08-14

File Location: P:\RLWTF LOW-LEVEL WASTE FACILITY\500 CAD\C55864 MAIN BUILDING\SHEETS\13 PLUMBING\55864-P-9105-RD.DWG
Plotted By: MOORE, STEVEN; Plot Date: Monday, May 05, 2014

12254

PROCESS SYMBOL LEGEND

LINE TYPES

SYMBOL	LINE TYPE	DESCRIPTION
———	CONTINUOUS	PRIMARY PROCESS FLOW LINE
———	CONTINUOUS	SECONDARY PROCESS FLOW LINE
———	CONTINUOUS	INSTRUMENT SUPPLY OR CONNECTION TO PROCESS LINE
—|—|—	CONTINUOUS	PNEUMATIC SIGNAL
—o—o—	SOFTWARE	SOFTWARE LINK
— — —	HIDDEN	ELECTRIC SIGNAL
—⊣⊢—	CONTINUOUS	HYDRAULIC SIGNAL
—E—E—	CONTINUOUS	ELECTRICAL HEAT TRACING
— — —	PHANTOM	EXISTING
		BURIED PIPE IN PIPE
▪▪▪▪▪▪▪	HIDDENX2	BURIED PIPE

ABBREVIATIONS

(ALL ABBREVIATIONS SHOWN ARE NOT NECESSARILY USED ON THE DRAWINGS)

EQUIPMENT

AOBV	AIR OPERATED BALL VALVE
BFP	BACK FLOW PREVENTER
CHR	CHILLER
COND	CONDUCTIVITY
DAR	DRYER AIR
EDU	EDUCTOR
ENC	ENCLOSURE
ESB	EFFLUENT SAMPLE BUILDING
ESCB	EFFLUENT STORAGE CONTAINMENT BASIN
EVAP	EVAPORATOR
FAC	FILTER AIR COMPRESSED
FAH	FILTER AIR HEPA
FAR	FILTER AIR ROUGHING
FCV	FLOW CONTROL VALVE
FLT	FILTER LIQUID
HEPA	HIGH EFFICIENCY PARTICULATE AIR FILTER
HX	HEAT EXCHANGER
IC	INTERFACE CONTROL
LLW	LOW LEVEL WASTE
MF	MICRO FILTER
MC	MIXER CHEMICAL
MOBV	MOTOR OPERATED BALL VALVE
P	PUMP
PAC	PUMP ACID OR CHEMICAL
PCW	PUMP CHILLED WATER
PRV	PRESSURE RELIEF VALVE
PS	PUMP SUMP
ROU	REVERSE OSMOSIS UNIT
SCR	SILICON CONTROLLED RECTIFIER
SM	SUMP
SMP	SAMPLER
SV	SOLENOID VALVE
TAC	TANK ACID OR CHEMICAL
TCA	TANK COMPRESSED AIR
TK	TANK
T	TRAP
V	VALVE
VC	CHECK VALVE
VFD	VARIABLE FREQUENCY DRIVE

LINE TYPE

CA	COMPRESSED AIR
CS	CHEMICAL SUPPLY
CWR	CHILLED WATER RETURN
CWS	CHILLED WATER SUPPLY
HRR	HEAT RECOVERY RETURN
HRS	HEAT RECOVERY SUPPLY
HWR	HEATING WATER RETURN
HWS	HEATING WATER SUPPLY
LLW	LOW LEVEL WASTE
NG	NATURAL GAS
NPWC	NON-POTABLE WATER COLD
PCWS	PROCESS CHILLED WATER SUPPLY
PCWR	PROCESS CHILLED WATER RETURN
PRW	PROCESS WATER
PWC	POTABLE WATER COLD
PWHR	POTABLE WATER HOT RETURN
PWHS	POTABLE WATER HOT SUPPLY
SW	SANITARY WASTE

LINE VALVE STATUS SYMBOLS

TYPICAL VALVE ANNOTATIONS

FO	FAIL OPEN
FC	FAIL CLOSED
NO	NORMALLY OPEN
NC	NORMALLY CLOSE
LO	LOCKED OPEN
LC	LOCKED CLOSED
O/C	OPEN/CLOSE

MISCELLANEOUS

ATR ALL THREAD ROD

MATERIAL/CLASSIFICATION

CS	–	CARBON STEEL
CU	–	COPPER
HDPE	–	HIGH DENSITY POLYETHYLENE
SS150	–	STAINLESS STEEL 150#
SS300	–	STAINLESS STEEL 300#

LINE LABELING LEGEND

LLW–303–SS150–3"

- LLW – LINE TYPE
- 303 – LINE NUMBER
- SS150 – MATERIAL/CLASSIFICATION
- 3" – LINE SIZE

(GENERAL INSTRUMENT OR FUNCTION SYMBOLS) P&ID SYMBOLS

SYMBOL	DESCRIPTION	SYMBOL	DESCRIPTION	SYMBOL	DESCRIPTION
	BALL VALVE		HORIZONTAL TANK		CENTRIFUGAL PUMP
	BUTTERFLY VALVE		TANK		
	CHECK VALVE				VACUUM PUMP
	NEEDLE VALVE		SLOPED BOTTOM TANK		
FC	SELF CLOSING MANUAL VALVE		ELLIPTICAL TOP TANK		REPLACEABLE CORE FILTER DRYER/INLINE FILTER
	KNIFE GATE VALVE				
	THREE WAY VALVE		ELLIPTICAL BOTTOM TANK WITH SKIRT		CONDENSER
	SAFETY OR RELIEF VALVE		CONICAL BOTTOM TANK WITH LEGS		
S	2 WAY SOLENOID				
S	3 WAY SOLENOID		MICRO FILTER OR RO ARRAY		COLD EVAPORATOR
	SELF REGULATING FLOW/PRESSURE CONTROL VALVE		55 GALLON DRUM (WITH OPTIONAL ASSEMBLY)		
	SPRING–OPPOSED SINGLE–ACTING ACTUATOR		OPEN DRAIN (SHOWN)		POLISHING FILTER
	MODULATING VALVE ACTUATOR		MIXER		ROUGHING FILTER
ZS	AIR OPERATED SPRING RETURN		HEATER		
F	FLOW ELEMENT (GENERIC)	M	MOTOR		AIR DIAPHRAGM PUMP
S	SOLENOID		FILTER		
	VERTICAL SUMP PUMP		SAMPLE BOTTLE		FLEX HOSE
	SUMP		HEAT EXCHANGER	IC xxx	INTERFACE CONTROL POINT
	SPRAY BALL				
	FLANGED CONNECTION (PIPING OR EQUIP)		EDUCTOR		EXTERIOR WALL OR FLOOR PENETRATION
	HOSE CONNECTION				
	PIPE CAP		THERMOWELL		FLEX HOSE IDENTIFIER
	QUICK COUPLING		ROTARY PRESS		SPECIFICATION/LINE NUMBER CHANGE
	REDUCER (SIZE DEFINED ON P&ID)				ROTAMETER
	PUMP				EXAMINATION PORT
1/8" 1'	SLOPE		METERING PUMP		SILENCER/MUFFLER
	FILTER WITH WEATHER CAP		LINE CONTINUATION		ORIFICE
	DIAPHRAGM		3/8" BULKHEAD CONNECTOR (TOP OF TANK)		THREADOLET
					CHEMICAL DAY TANK CONTAINMENT

INSTRUMENT/FUNCTION SYMBOLS

	PRIMARY LOCATION NORMALLY ACCESSIBLE TO OPERATOR	FIELD MOUNTED	AUXILIARY LOCATION NORMALLY ACCESSIBLE TO OPERATOR	AUXILIARY LOCATION NORMALLY INACCESSIBLE TO OPERATOR
DISCRETE INSTRUMENTS	J1 / J2	J1 / J2	J1 / J2	J1 / J2
SHARED DISPLAY, SHARED CONTROL	J1 / J2	J1 / J2	J1 / J2	J1 / J2

INTERLOCK SYMBOL

- I / X — HARD WIRED INTERLOCK
  - INTERLOCK NUMBER
- I / X — SOFTWARE INTERLOCK
  - INTERLOCK NUMBER

GENERAL NOTES

1. ALL REMOTE ACTUATED VALVES ARE FAIL CLOSED UNLESS OTHERWISE INDICATED.
2. ALL PRV'S ON LIQUID LINES SHALL DISCHARGE TO NEAREST FLOOR TRENCH, UNLESS PIPE ROUTING IS OTHERWISE INDICATED.

M. EVELYN ROGERS — NEW MEXICO — 22184 — PROFESSIONAL ENGINEER — 5/15/14

NO	DATE	CLASS REV	ADC	DESCRIPTION	DWN	DES	CHKD	SUB	APP

AECOM

RLWTF–UP LOW LEVEL WASTE SUBPROJECT

PROCESS P&ID SYMBOL LEGEND

BLDG. 230 TA–50

DRAWN	V DAVISON
DESIGN	S MOORE
CHECKED	E ROGERS
DATE	5/8/14

SUBMITTED MANNY TARIN — APPROVED FOR RELEASE ED ARTIGLIA

Los Alamos NATIONAL LABORATORY — PO Box 1663 Los Alamos, New Mexico 87545

SHEET D–0001

204 OF 434

CLASSIFICATION — REVIEWER — DATE

PROJECT ID 100761 — DRAWING NO C55864 — REV 0

C55864

File Location: P:\RLWTF LOW-LEVEL WASTE FACILITY\500 CAD\C55864 MAIN BUILDING\SHEETS\14 PROCESS\55864-D-0001-R0.DWG
Plotted By: MOORE, STEPHEN Plot Date: Monday, May 05, 2014

VALVE & INSTRUMENTATION IDENTIFIER LETTERS

FIRST-LETTERS	INDICATING MEASURED OR CONTROLLED VARIABLE	CONTROLLERS			VALVES	READOUT DEVICE		SWITCHES AND ALARM DEVICES			TRANSMITTERS			SOLENOIDS RELAYS COMPUTING DEVICES	PRIMARY ELEMENT	TEST POINT	WELL OR PROBE	VIEWING DEVICE GLASS	SAFETY DEVICE	FINAL ELEMENT
		RECORDING	INDICATING	BLIND		RECORDING	INDICATING	HIGH*	LOW	COMB	RECORDING	INDICATING	BLIND							
A	ANALYSIS	ARC	AIC	AC		AR	AI	ASH	ASL	ASHL	ART	AIT	AT	AY	AE	AP	AW			AV
B	BURNER/ COMBUSTION	BRC	BIC	BC		BR	BI	BSH	BSL	BSHL	BRT	BIT	BT	BY	BE		BW	BG		BZ
C	CONDUCTIVITY		CIC	CC											CE					
D	USER'S CHOICE																			
E	VOLTAGE	ERC	EIC	EC		ER	EI	ESH	ESL	ESHL	ERT	EIT	ET	EY	EE					EZ
F	FLOW RATE	FRC	FIC	FC	FCV FICV	FR	FI	FSH	FSL	FSHL	FRT	FIT	FT	FY	FE	FP		FG		FV
FQ	FLOW QUANTITY	FQRC	FQIC			FQR	FQI	FQSH	FQSL			FQIT	FQT	FQY	FQE					FQV
FF	FLOW RATIO	FFRC	FFIC	FFC		FFR	FFI	FFSH	FFSL						FE					FFV
G	USER'S CHOICE																			
H	HAND		HIC	HC	HV					HS										HV
I	CURRENT	IRC	IIC			IR	II	ISH	ISL	ISHL	IRT	IIT	IT	IY	IE					IZ
J	POWER	JRC	JIC	ARC		JR	JI	JSH	JSL	JSHL	JRT	JIT	JT	JY	JE					JV
K	TIME	KRC	KIC	KC	KCV	KR	KI	KSH	KSL	KSHL	KRT	KIT	KT	KY	KE					KV
L	LEVEL	LRC	LIC	LC	LCV	LR	LI	LSH	LSL	LSHL	LRT	LIT	LT	LY	LE		LW	LG		LV
LD	LEAK DETECTOR																			
M	MOISTURE/ HUMIDITY						MI						MT							
N	USER'S CHOICE																			
O	USER'S CHOICE																			
P	PRESSURE VACUUM	PRC	PIC	PC	PCV	PR	PI	PSH	PSL	PSHL	PRT	PIT	PT	PY	PE	PTP			PSV PSE	PV
PD	PRESSURE DIFFERENTIAL	PDRC	PDIC	PDC	PDCV	PDR	PDI	PDSH	PDSL		PDRT	PDIT	PDT	PDY	PE	PTP				PDV
PH	PH																			
Q	QUALITY	QRC	QIC			QR	QI	QSH	QSL	QSHL	QRT	QIT	QT	QY	QE					QZ
R	RADIATION	RRC	RIC	RC		RR	RI	RSH	RSL	RSHL	RRT	RIT	RT	RY	RE		RW			RZ
S	SPEED	SRC	SIC	SC	SCV	SR	SI	SSH	SSL	SSHL	SRT	SIT	ST	SY	SE					SV
T	TEMPERATURE	TRC	TIC	TC	TCV	TR	TI	TSH	TSL	TSHL	TRT	TIT	TT	TY	TE	TP	TW		TSE	TV
T	TEMPERATURE DIFFERENTIAL	TDRC	TDIC	TDC	TDCV	TDR	TDI	TDSH	TDSL		TDRT	TDIT	TDT	TDY	TDE	TDP TP	TDW TW			TDV
U	MULTIVARIABLE					UR	UI							UY						UV
V	MACHINERY VIBRATION ANALYSIS					VR	VI	VSH	VSL	VSHL	VRT	VIT	VT	VY	VE					VZ
W	WEIGHT FORCE	WRC	WIC	WC	WCV	WR	WI	WSH	WSL	WSHL	WRT	WIT	WT	WY	WE					WZ
WD	WEIGHT FORCE DIFFERENTIAL	WDRC	WDIC	WDC	WDCV	WDR	WDI	WDSH	WDSL		WDRT	WDIT	WDT	WDY	WDE WE					WDZ
X	USER'S CHOICE																			
Y	EVENT STATE PRESENCE		YIC	YC		YR	YI	YSH	YSL				YT	YY	YE					YZ
Z	POSITION DIMENSION	ZRC	ZIC	ZC	ZCV	ZR	ZI	ZSH	ZSL	ZSHL	ZRT	ZIT	ZT	ZY	ZE					ZV
ZD	GAUGING DEVIATION	ZDRC	ZDIC	ZDC	ZDCV	ZDR	ZDI	ZDSH	ZDSL		ZDRT	ZDIT	ZDT	ZDY	ZDE					ZDV

NOTE:
THIS TABLE IS NOT ALL-INCLUSIVE.
*A, ALARM, THE ANNUNCIATING DEVICE, MAY BE USED IN THE SAME FASHION A S, SWITCH, THE ACTING DEVICE.
** THE LETTERS H AND L MAY BE OMITTED IN THE UNDEFINED CASE.

OTHER POSSIBLE COMBINATIONS:

FQ	(RESTRICTION ORIFICE)	PFR	(RATIO)
FRK, HIK	(CONTROL STATIONS)	KQI	(RUNNING TIME INDICATOR)
FX	(ACCESSORIES)	QQI	(INDICATING COUNTER)
TJR	(SCANNING RECORDER)	WKIC	(RATE-OF-WEIGHT-LOSS CONTROLLER)
LLH	(PILOT LIGHT)	HMS	(HAND MOMENTARY SWITCH)

INSTRUMENT/EQUIPMENT LABELING LEGEND

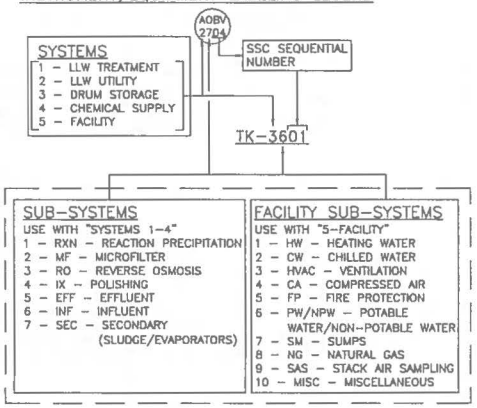

INSTRUMENTATION IDENTIFICATION TABLE

J1 J2

J1 INSTRUMENT FUNCTION IDENTIFIER
J2 IDENTIFICATION NUMBER

NOTE:
INSTRUMENTATION FUNCTION IDENTIFIERS (J1) AND FUNCTION SYMBOLS PER ANSI/ISA S5.1.

INTERFACE CONTROL POINTS LEGEND

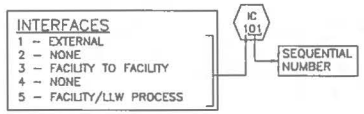

NO	DATE	CLASS REV	ADC	DESCRIPTION	DWN	DES	CHKD	SUB	APP

AECOM

RLWTF-UP LOW LEVEL WASTE SUBPROJECT

PROCESS
P&ID SYMBOL LEGEND

BLDG. 230 TA-50

DRAWN	VD	V DAVISON
DESIGN	SM	S MOORE
CHECKED	ER	E ROGERS
DATE	5/8/14	

SUBMITTED MANNY TARIN — APPROVED FOR RELEASE ED ARTIGLIA

Los Alamos NATIONAL LABORATORY PO Box 1663 Los Alamos, New Mexico 87545

SHEET D-0002
205 OF 434

CLASSIFICATION | REVIEWER | DATE

PROJECT ID 100761 | DRAWING NO C55864 | REV 0

M. EVELYN ROGERS NEW MEXICO 22184 REGISTERED PROFESSIONAL ENGINEER 5/8/14

95221 : 1

File Location: P:\RLWTF LOW-LEVEL WASTE FACILITY\500 CAD\C55864 MAIN BUILDING\SHEETS\14 PROCESS\55864-D-0002-RB.DWG
Plotted By: MOORE, STEPHEN Plot Date: Monday, May 05, 2014

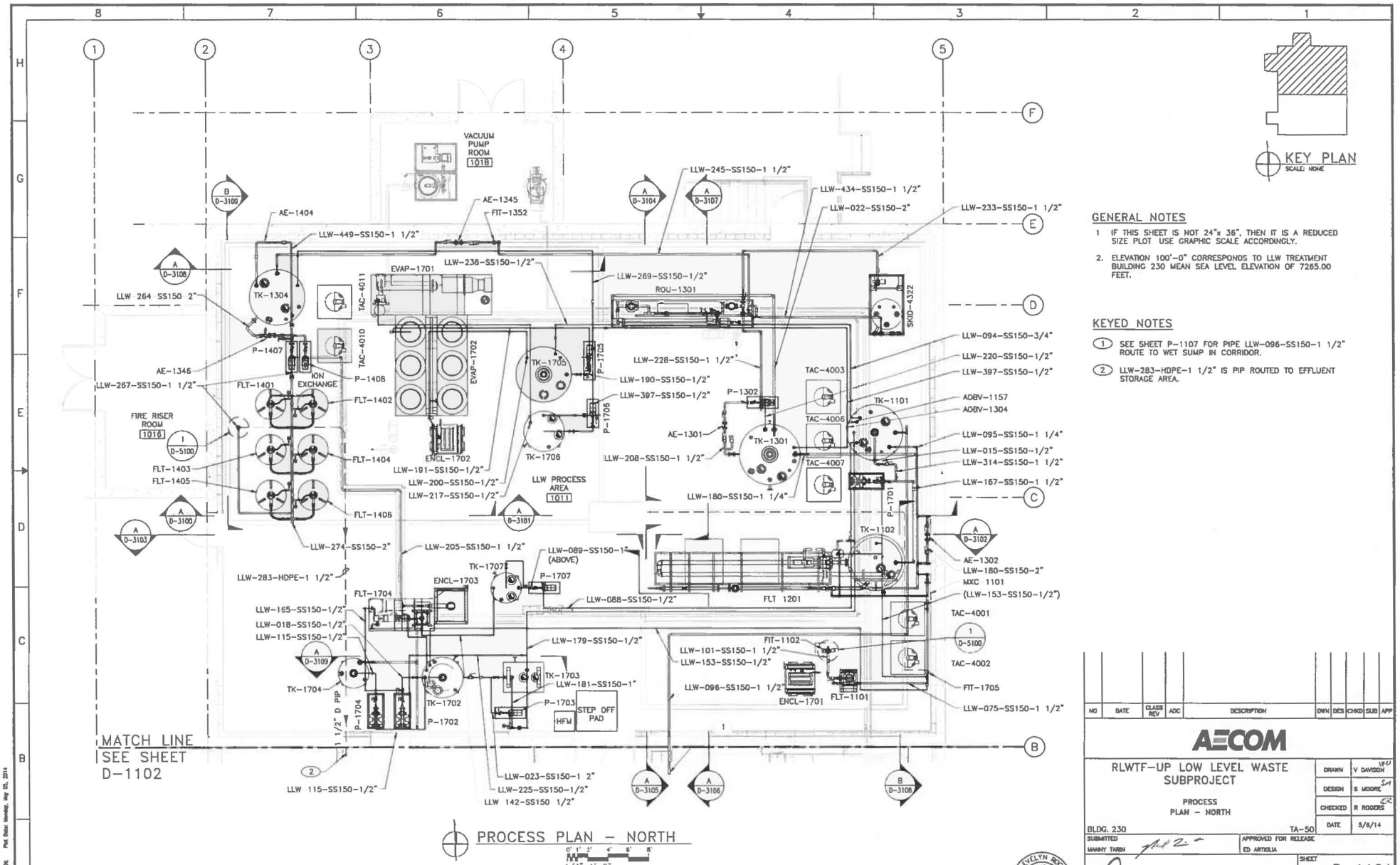

PROCESS PLAN – NORTH

1/4"=1'-0"

KEY PLAN
SCALE: NONE

GENERAL NOTES

1. IF THIS SHEET IS NOT 24"x 36", THEN IT IS A REDUCED SIZE PLOT USE GRAPHIC SCALE ACCORDINGLY.
2. ELEVATION 100'-0" CORRESPONDS TO LLW TREATMENT BUILDING 230 MEAN SEA LEVEL ELEVATION OF 7265.00 FEET.

KEYED NOTES

(1) SEE SHEET P-1107 FOR PIPE LLW-096-SS150-1 1/2" ROUTE TO WET SUMP IN CORRIDOR.

(2) LLW-283-HDPE-1 1/2" IS PIP ROUTED TO EFFLUENT STORAGE AREA.

NO	DATE	CLASS REV	ADC	DESCRIPTION	DWN	DES	CHKD	SUB	APP

AECOM

RLWTF–UP LOW LEVEL WASTE SUBPROJECT

PROCESS PLAN – NORTH

DRAWN	V DAVISON
DESIGN	S MOORE
CHECKED	R ROGERS
DATE	5/8/14

BLDG. 230 TA-50

SUBMITTED MANNY TARIN

APPROVED FOR RELEASE ED ARTIGLIA

Los Alamos NATIONAL LABORATORY PO Box 1663 Los Alamos, New Mexico 87545

SHEET D-1101

206 OF 434

CLASSIFICATION REVIEWER DATE

PROJECT ID 100761

DRAWING NO C55864

REV 0

EVELYN ROGERS NEW MEXICO 12189 PROFESSIONAL ENGINEER 5/8/14

File Location: P:\RLWTF LOW-LEVEL WASTE FACILITY\300 CAD\C55864 MAIN BUILDING\SHEETS\14 PROCESS\55864-D-1101-P0.DWG
Plotted By: MOORE, STEPHEN Plot Date: Monday, May 05, 2014

12257

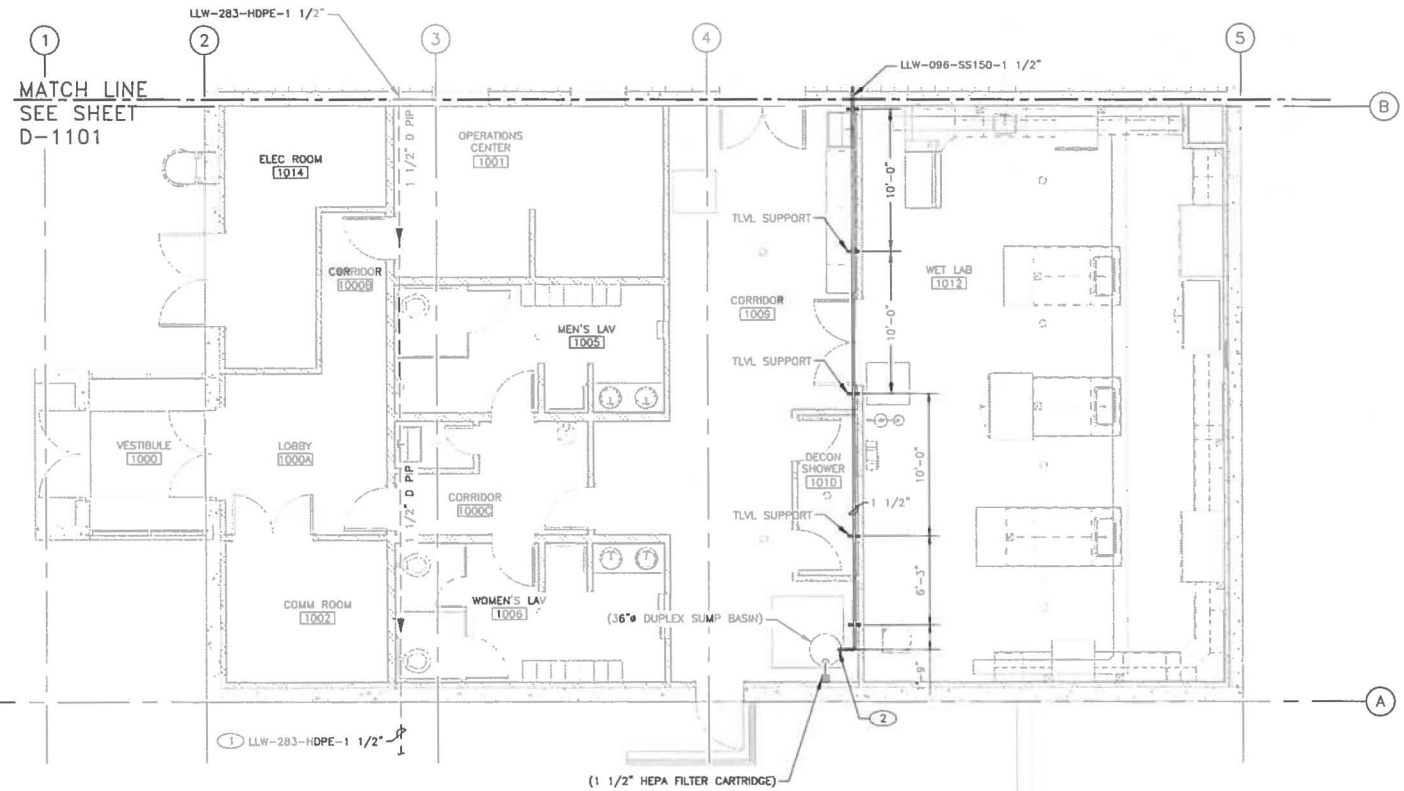

PROCESS PIPING PLAN – SOUTH

1/4"=1'-0"

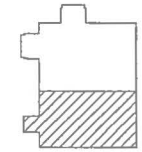

KEY PLAN
SCALE: NONE

GENERAL NOTES

1. IF THIS SHEET IS NOT 24"X36", THEN IT IS A REDUCED SIZE PLOT. USE THE GRAPHIC SCALE ACCORDINGLY.
2. FINISHED FLOOR ELEVATION 100'-0" = 7265.0 FT. = 7265'-0".
3. REFER TO SHEET D-5101 FOR PIPE SUPPORT CODE TYPE.

KEYED NOTES

1. ROUTE LLW-283-HDPE-1 1/2" TO EFFLUENT STORAGE TANKS.
2. LLW-096-SS150-1 1/2" CONNECTION TO PS-5700 LOCATED WITHIN SUMP.

NO	DATE	CLASS REV	ADC	DESCRIPTION	DWN	DES	CHKD	SUB	APP

AECOM

RLWTF-UP LOW LEVEL WASTE SUBPROJECT

PROCESS PLAN – SOUTH

BLDG. 230 TA-50

DRAWN	V DAVISON
DESIGN	S MOORE
CHECKED	E ROGERS
DATE	5/6/14

SUBMITTED: MANNY TARIN

APPROVED FOR RELEASE: ED ARTIGLIA

Los Alamos NATIONAL LABORATORY PO Box 1663 Los Alamos, New Mexico 87545

SHEET D-1102

207 OF 434

CLASSIFICATION | REVIEWER | DATE

PROJECT ID 100761 | DRAWING NO C55864 | REV 0

M. EVELYN ROGERS NEW MEXICO 22184 PROFESSIONAL ENGINEER 5/15/14

File Location: P:\RLWTF LOW-LEVEL WASTE FACILITY\500 CAD\C55864 MAIN BUILDING\SHEETS\14 PROCESS\55864-D-1102-RD.DWG
Plotted By: MOORE, STEPHEN Plot Date: Tuesday, May 06, 2014

12258

GENERAL NOTES

1. IF THIS SHEET IS NOT 24"x 36", THEN IT IS A REDUCED SIZE PLOT. USE GRAPHIC SCALE ACCORDINGLY.

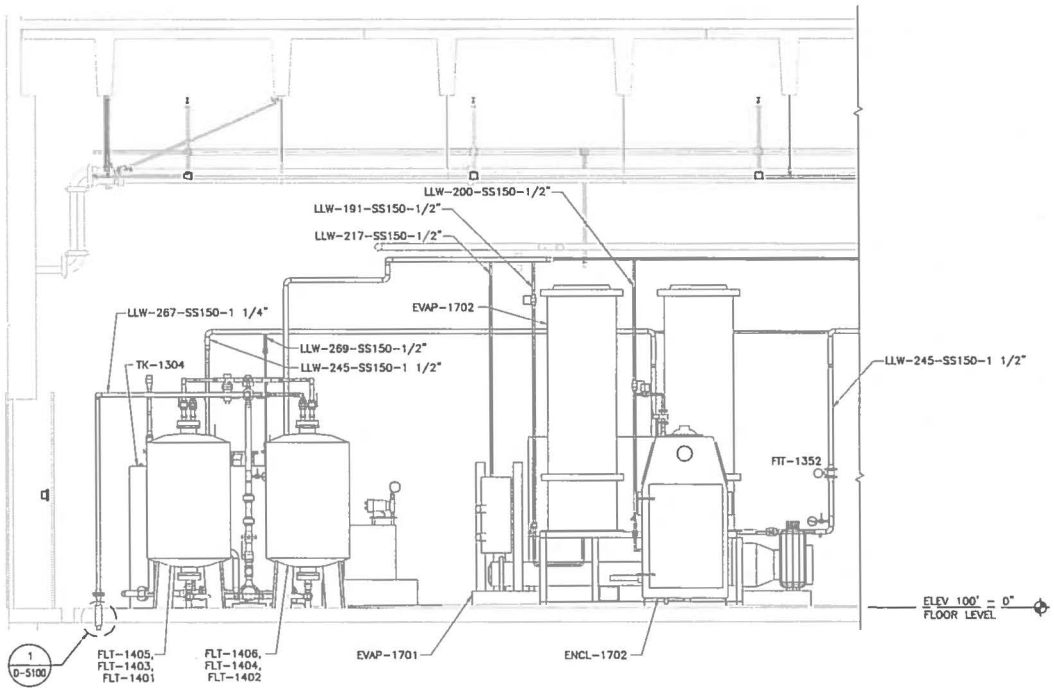

A
D-1101
PROCESS SECTION

1' 0" 0 1' 2" 3'
1/2"=1'-0"

NO	DATE	CLASS REV	ADC	DESCRIPTION	DWN	DES	CHKD	SUB	APP

AECOM

RLWTF-UP LOW LEVEL WASTE SUBPROJECT

PROCESS SECTION - NORTH

BLDG. 230 TA-50

DRAWN	V DAVISON
DESIGN	S MOORE
CHECKED	E ROGERS
DATE	5/8/14

SUBMITTED MANNY TARIN

APPROVED FOR RELEASE ED ARTIGLIA

Los Alamos NATIONAL LABORATORY PO Box 1663 Los Alamos, New Mexico 87545

SHEET D-3100

208 OF 434

CLASSIFICATION | REVIEWER | DATE

PROJECT ID 100761 | DRAWING NO C55864 | REV 0

M. EVELYN ROGERS NEW MEXICO 23184 PROFESSIONAL ENGINEER

65221 :

File Location: P:\RLWTF LOW-LEVEL WASTE FACILITY\300 CAD\C55864 MAIN BUILDING\SHEETS\14 PROCESS\55864-D-3100-R0.DWG
Plotted By: MOORE, STEPHEN Plot Date: Monday, May 05, 2014

GENERAL NOTES

1. IF THIS SHEET IS NOT 24"x 36", THEN IT IS A REDUCED SIZE PLOT. USE GRAPHIC SCALE ACCORDINGLY.

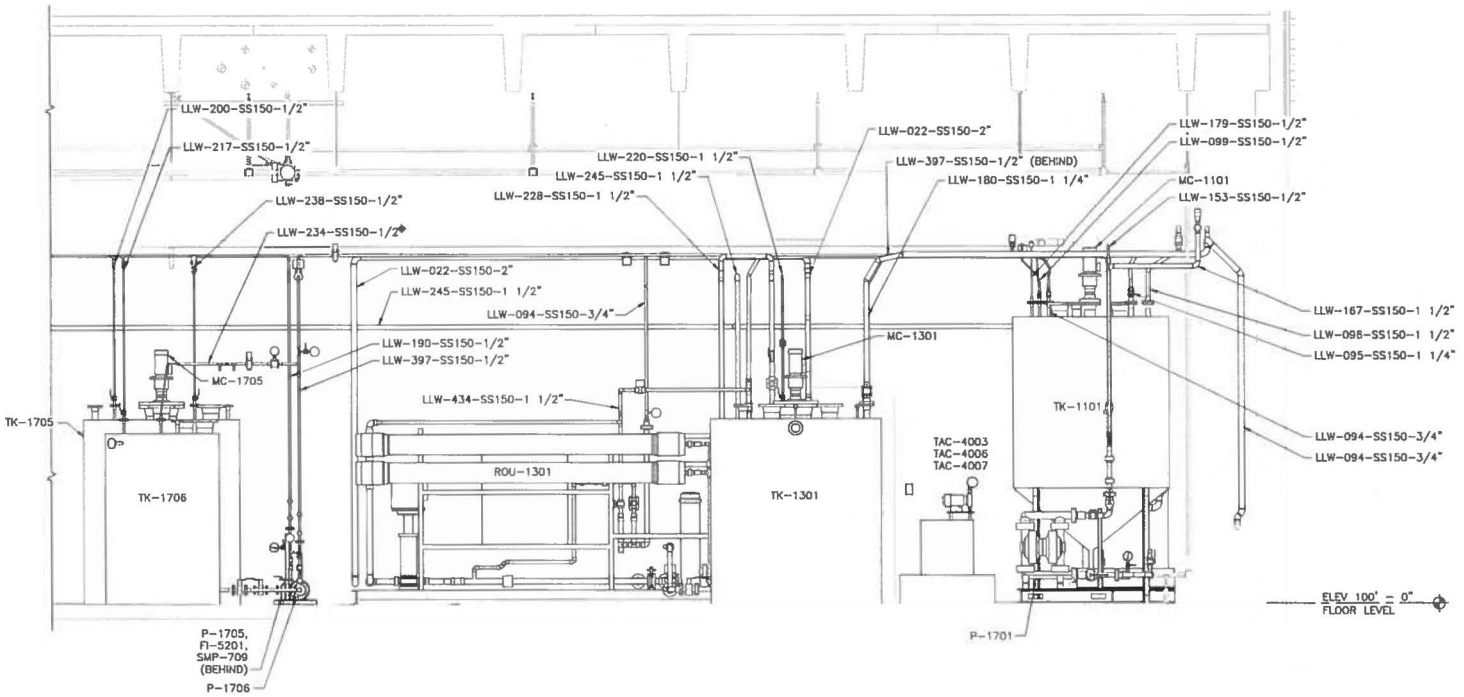

A D-1101 PROCESS SECTION

1' 6" 0 1' 2' 3'
1/2"=1'-0"

NO	DATE	CLASS REV	ADC	DESCRIPTION	DRWN	DES	CHKD	SUB	APP

AECOM

RLWTF-UP LOW LEVEL WASTE SUBPROJECT

PROCESS SECTION - NORTH

DRAWN	V DAVISON
DESIGN	S MOORE
CHECKED	E ROGERS
DATE	5/8/14

BLDG. 230 TA-50

SUBMITTED MANNY TARIN

APPROVED FOR RELEASE ED ARTIGLIA

Los Alamos NATIONAL LABORATORY PO Box 1663 Los Alamos, New Mexico 87545

SHEET D-3101

209 OF 434

CLASSIFICATION | REVIEWER | DATE

PROJECT ID 100761

DRAWING NO C55864

REV 0

M. EVELYN ROGERS NEW MEXICO 22184 PROFESSIONAL ENGINEER

5/8/14

59227 :

File Location: P:\RLWTF LOW-LEVEL WASTE FACILITY\300 CAD\C55864 MAIN BUILDING\SHEETS\14 PROCESS\55864-D-3101-R0.DWG
Plotted By: MOORE, STEPHEN Plot Date: Monday, May 05, 2014

GENERAL NOTES

1. IF THIS SHEET IS NOT 24"x 36", THEN IT IS A REDUCED SIZE PLOT. USE GRAPHIC SCALE ACCORDINGLY.

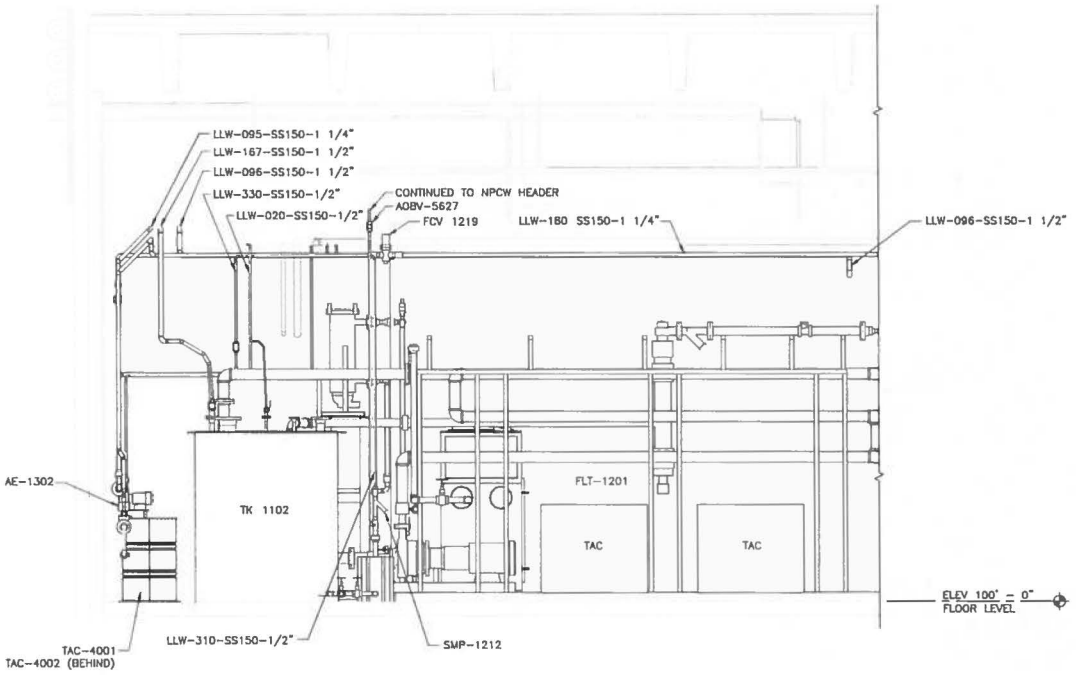

A D-1101 PROCESS SECTION

1" 6" 0 1' 2' 3"
1/2"=1'-0"

NO	DATE	CLASS REV	ADC	DESCRIPTION	DWN	DES	CHKD	SUB	APP

AECOM

RLWTF-UP LOW LEVEL WASTE SUBPROJECT

PROCESS SECTION - SOUTH

BLDG. 230 TA-50

DRAWN	V DAVISON
DESIGN	S MOORE
CHECKED	E ROGERS
DATE	5/8/14

SUBMITTED MANNY TARIN

APPROVED FOR RELEASE ED ARTIGLIA

Los Alamos NATIONAL LABORATORY PO Box 1663 Los Alamos, New Mexico 87545

SHEET D-3102

210 OF 434

CLASSIFICATION | REVIEWER | DATE

PROJECT ID 100761 | DRAWING NO C55864 | REV 0

M. EVELYN ROGERS NEW MEXICO 23184 REGISTERED PROFESSIONAL ENGINEER
5/15/14

19221 :

File Location: P:\RLWTF LOW-LEVEL WASTE FACILITY\300 CAD\C55864 MAIN BUILDING\SHEETS\14 PROCESS\55864-D-3102-R0.DWG
Plotted By: MOORE, STEPHEN Plot Date: Monday, May 05, 2014

GENERAL NOTES

1. IF THIS SHEET IS NOT 24"x 36", THEN IT IS A REDUCED SIZE PLOT. USE GRAPHIC SCALE ACCORDINGLY.

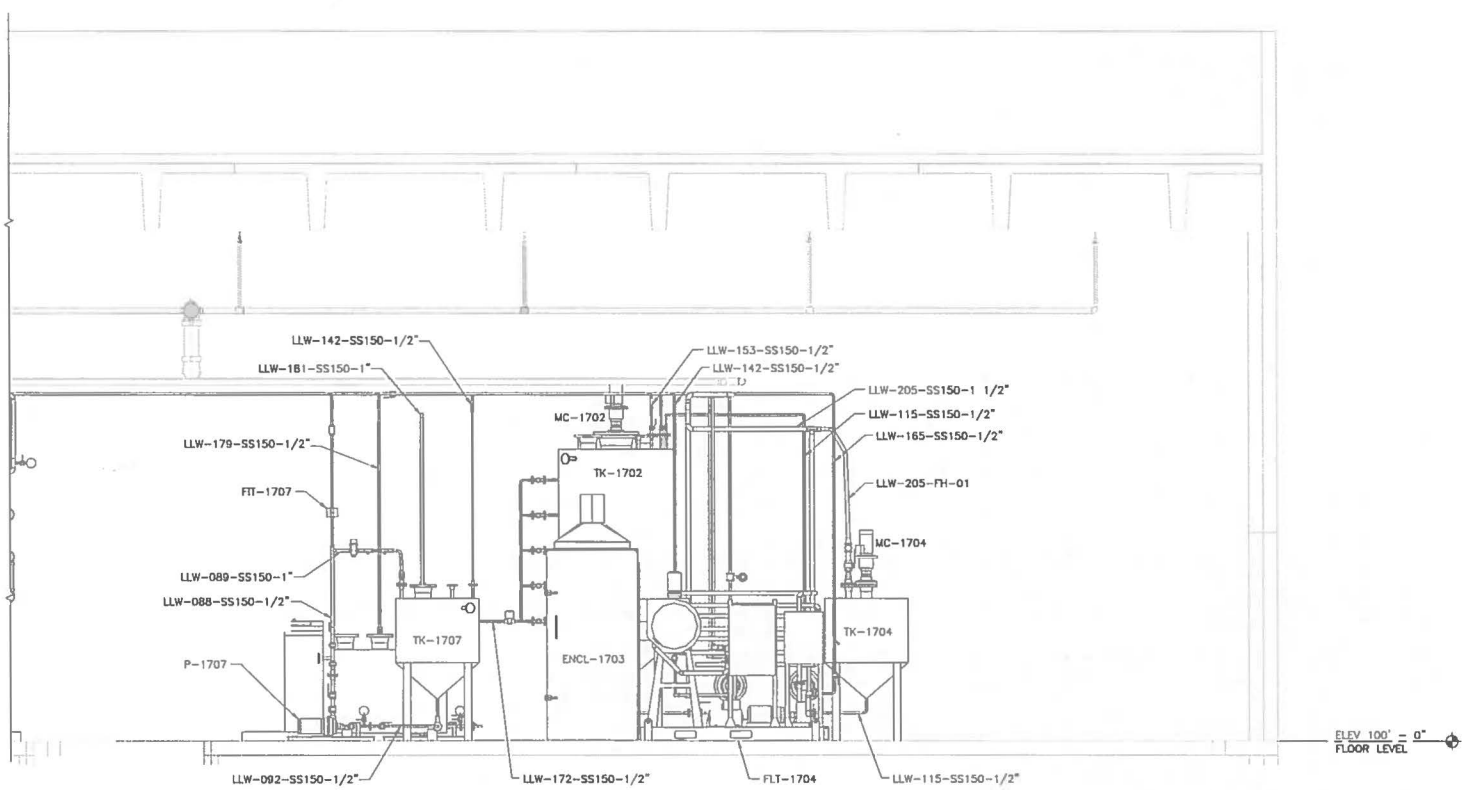

A D-1101 PROCESS SECTION

1" 6" 0 1' 2" 3'
1/2"=1'-0"

NO	DATE	CLASS REV	ADC	DESCRIPTION	DWN	DES	CHKD	SUB	APP

AECOM

RLWTF-UP LOW LEVEL WASTE SUBPROJECT

PROCESS SECTION - SOUTH

DRAWN	V DAVISON
DESIGN	E MOORE
CHECKED	E ROGERS
DATE	5/8/14

BLDG. 230 TA-50

SUBMITTED MANNY TARIN

APPROVED FOR RELEASE ED ARTIOLIA

Los Alamos NATIONAL LABORATORY PO Box 1663 Los Alamos, New Mexico 87545

SHEET D-3103

211 OF 434

CLASSIFICATION REVIEWER DATE

PROJECT ID 100761

DRAWING NO C55864

REV 0

M. EVELYN ROGERS NEW MEXICO 22184 REGISTERED PROFESSIONAL ENGINEER 5/15/14

File Location: P:\RLWTF LOW-LEVEL WASTE FACILITY\500 CAD\C55864 MAIN BUILDING\SHEETS\14 PROCESS\55864-D-3103-R0.DWG
Plotted By: MOORE, STEPHEN Plot Date: Monday, May 05, 2014

: 122562

GENERAL NOTES

1. IF THIS SHEET IS NOT 24"x 36", THEN IT IS A REDUCED SIZE PLOT. USE GRAPHIC SCALE ACCORDINGLY.

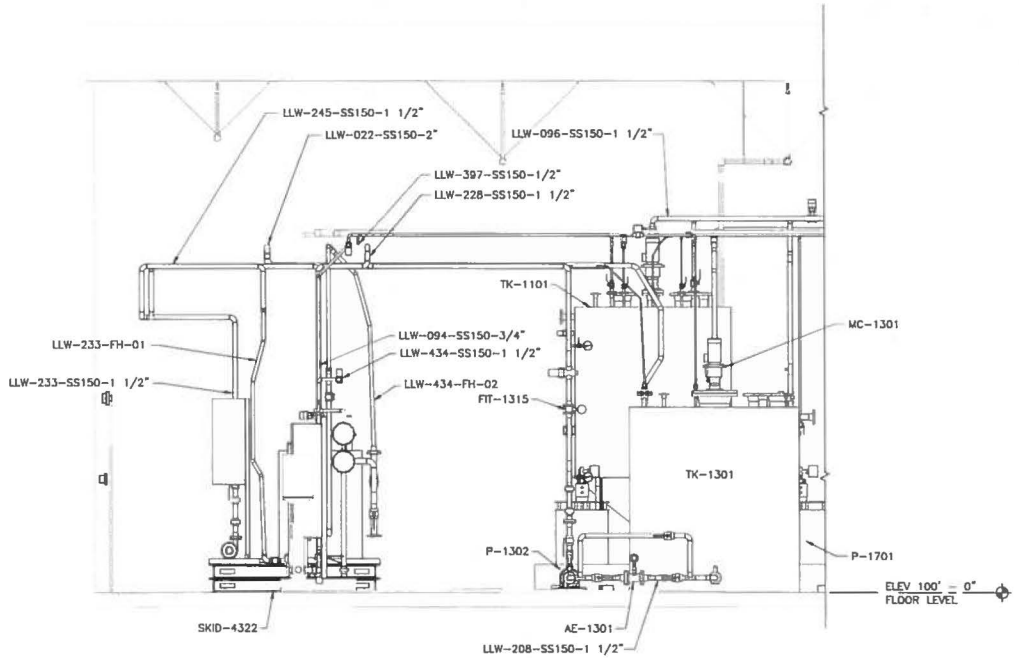

A D-1101 PROCESS SECTION

1' 6" 0 1' 2' 3'
1/2"=1'-0"

NO	DATE	CLASS REV	ADC	DESCRIPTION	DWN	DES	CHKD	SUB	APP

AECOM

RLWTF-UP LOW LEVEL WASTE SUBPROJECT

PROCESS SECTION – EAST

DRAWN	V DAVISON
DESIGN	S MOORE
CHECKED	E ROGERS
DATE	5/8/14

BLDG. 230 TA-50

SUBMITTED MANNY TARIN

APPROVED FOR RELEASE ED ARTIGLIA

Los Alamos NATIONAL LABORATORY PO Box 1663 Los Alamos, New Mexico 87545

SHEET D-3104

212 OF 434

CLASSIFICATION REVIEWER DATE

PROJECT ID 100761

DRAWING NO C55864

REV 0

M. EVELYN ROGERS NEW MEXICO 22184 PROFESSIONAL ENGINEER

5/8/14

File Location: P:\RLWTF LOW-LEVEL WASTE FACILITY\300 CAD\C55864 MAIN BUILDING\SHEETS\14 PROCESS\55864-D-3104-R0.DWG
Plotted By: MOORE, STEPHEN Plot Date: Monday, May 05, 2014

69226 : 1

GENERAL NOTES

1. IF THIS SHEET IS NOT 24"x 36", THEN IT IS A REDUCED SIZE PLOT. USE GRAPHIC SCALE ACCORDINGLY.

KEYED NOTES

(1) FLOOR PENETRATION TRANSITION FROM HDPE PIPE-IN-PIPE TO LLW-101-SS150-1 1/2".

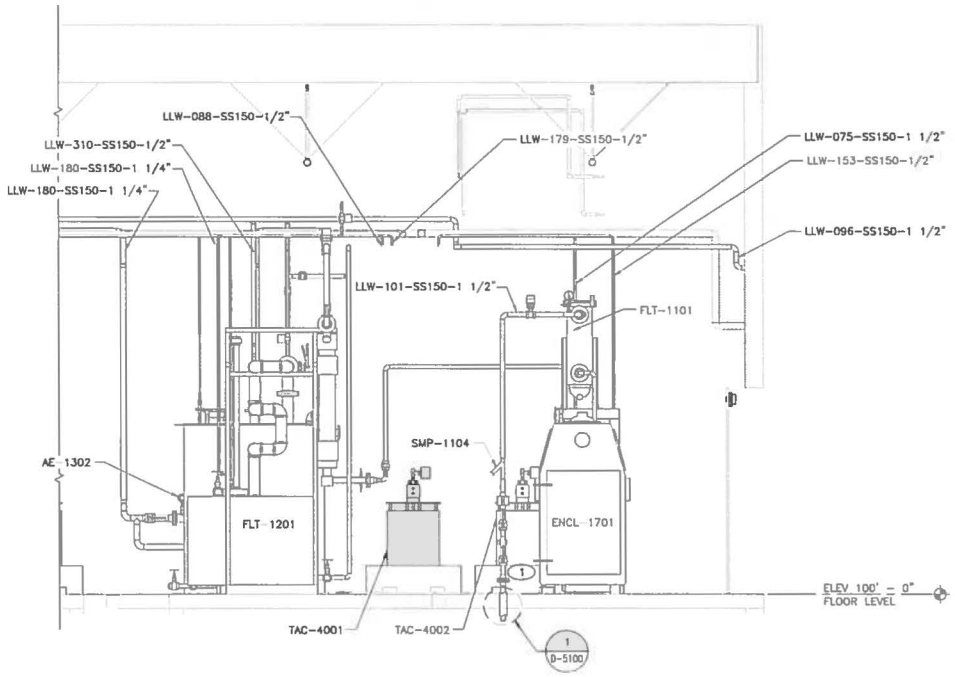

A D-1101 PROCESS SECTION

1/2"=1'-0"

NO	DATE	CLASS REV	ADC	DESCRIPTION	DWN	DES	CHKD	SUB	APP

AECOM

RLWTF-UP LOW LEVEL WASTE SUBPROJECT

PROCESS SECTION - EAST

BLDG. 230 TA-50

DRAWN	V DAVISON
DESIGN	S MOORE
CHECKED	E ROGERS
DATE	5/8/14

SUBMITTED MANNY TARN

APPROVED FOR RELEASE ED ARTIGLIA

Los Alamos NATIONAL LABORATORY PO Box 1663 Los Alamos, New Mexico 87545

SHEET D-3105

213 OF 434

CLASSIFICATION | REVIEWER | DATE

PROJECT ID 100761 | DRAWING NO C55864 | REV 0

M. EVELYN ROGERS NEW MEXICO 22184 PROFESSIONAL ENGINEER

5/15/14

File Location: P:\RLWTF LOW-LEVEL WASTE FACILITY\300 CAD\C55864 MAIN BUILDING\SHEETS\14 PROCESS\55864-D-3105-R0.DWG
Plotted By: MOORE, STEPHEN Plot Date: Monday, May 05, 2014

12264

GENERAL NOTES

1. IF THIS SHEET IS NOT 24"x 36", THEN IT IS A REDUCED SIZE PLOT. USE GRAPHIC SCALE ACCORDINGLY.

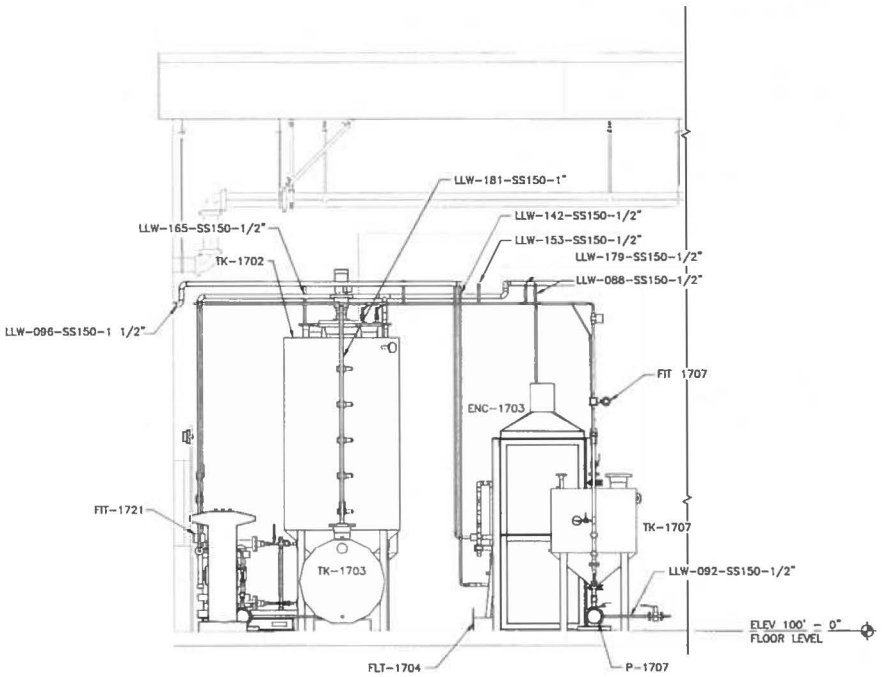

A D-1101 PROCESS SECTION

1/2"=1'-0"

NO	DATE	CLASS REV	ADC	DESCRIPTION	DRN	DES	CHKD	SUB	APP

AECOM

RLWTF-UP LOW LEVEL WASTE SUBPROJECT

PROCESS SECTION - WEST

DRAWN	V DAVISON
DESIGN	S MOORE
CHECKED	E ROGERS
DATE	5/8/14

BLDG. 230 TA-50

SUBMITTED MANNY TARIN

APPROVED FOR RELEASE ED ARTIGLIA

Los Alamos NATIONAL LABORATORY PO Box 1663 Los Alamos, New Mexico 87545

SHEET D-3106

214 OF 434

CLASSIFICATION REVIEWER DATE

PROJECT ID 100761

DRAWING NO C55864

REV 0

M. EVELYN ROGERS NEW MEXICO 22184 PROFESSIONAL ENGINEER

59221 :

File Location: P:\RLWTF LOW-LEVEL WASTE FACILITY\SOD CAD\C55864 MAIN BUILDING\SHEETS\14 PROCESS\55864-D-31106-R0.DWG
Plotted By: MOORE, STEPHEN Plot Date: Monday, May 05, 2014

GENERAL NOTES

1. IF THIS SHEET IS NOT 24"x 36", THEN IT IS A REDUCED SIZE PLOT. USE GRAPHIC SCALE ACCORDINGLY.

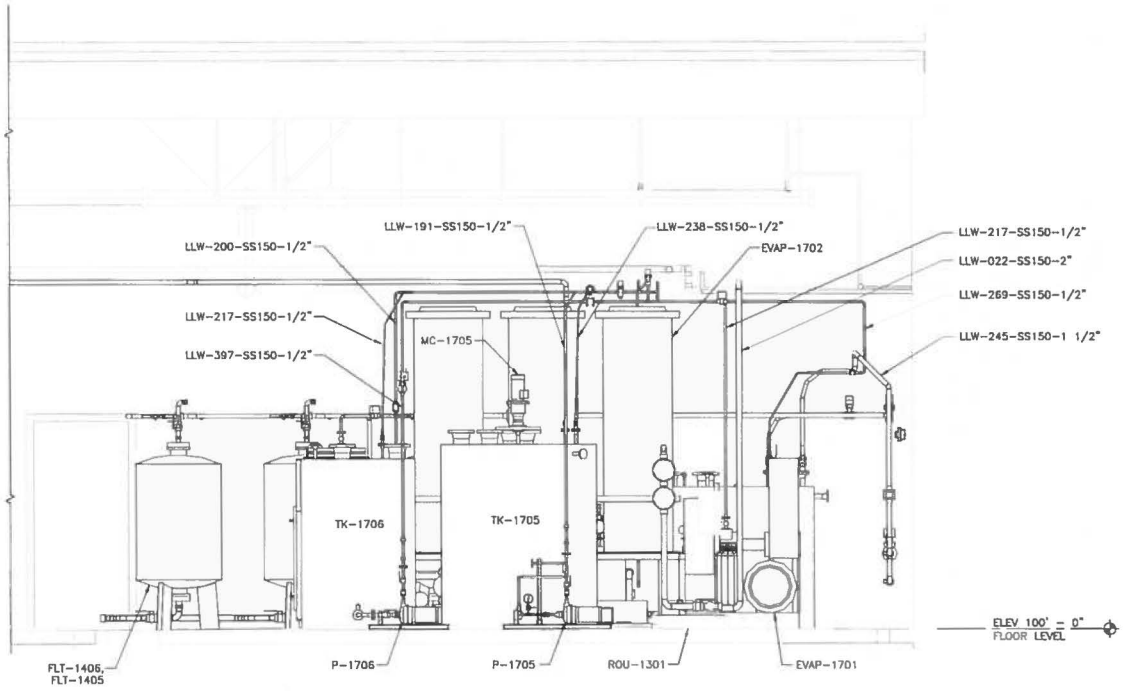

A / D-1101 PROCESS SECTION

1' 6" 0 1' 2' 3'
1/2"=1'-0"

NO	DATE	CLASS REV	ADC	DESCRIPTION	DWN	DES	CHKD	SUB	APP

AECOM

RLWTF-UP LOW LEVEL WASTE SUBPROJECT

PROCESS SECTION - WEST

DRAWN	V DAVISON
DESIGN	S MOORE
CHECKED	E ROGERS
DATE	5/8/14

BLDG. 230 TA-50

SUBMITTED MANNY TARIN

APPROVED FOR RELEASE ED ARTIGLIA

Los Alamos NATIONAL LABORATORY PO Box 1663 Los Alamos, New Mexico 87545

SHEET D-3107

215 OF 434

CLASSIFICATION | REVIEWER | DATE

PROJECT ID 100761 | DRAWING NO C55864 | REV 0

M. EVELYN ROGERS NEW MEXICO 22184 PROFESSIONAL ENGINEER

99221 :

File Location: P:\RLWTF LOW-LEVEL WASTE FACILITY\300 CAD\C55864 MAIN BUILDING\SHEETS\14 PROCESS\55864-D-3107-R0.DWG
Plotted By: MOORE, STEPHEN Plot Date: Monday, May 05, 2014

GENERAL NOTES

1. IF THIS SHEET IS NOT 24"x 36", THEN IT IS A REDUCED SIZE PLOT. USE GRAPHIC SCALE ACCORDINGLY.

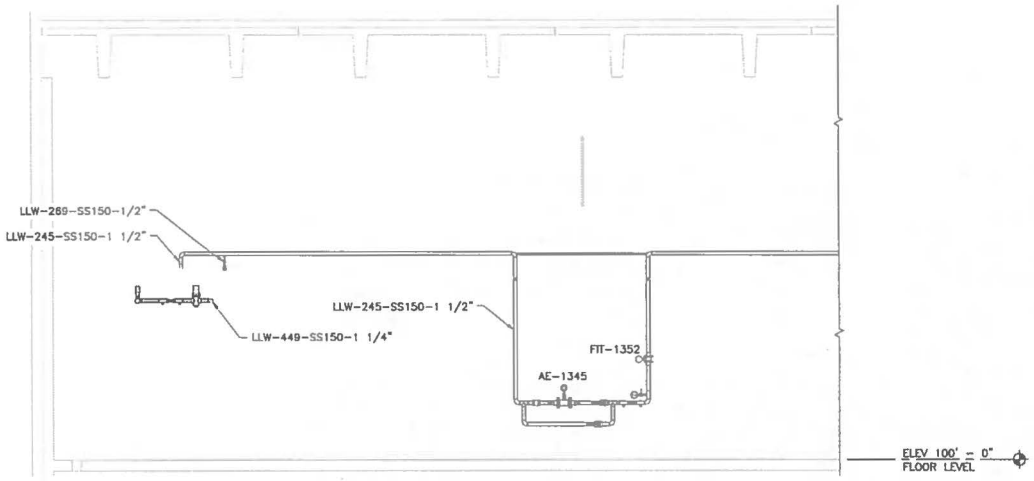

A 0-1101 PROCESS SECTION

3/8"=1'-0"

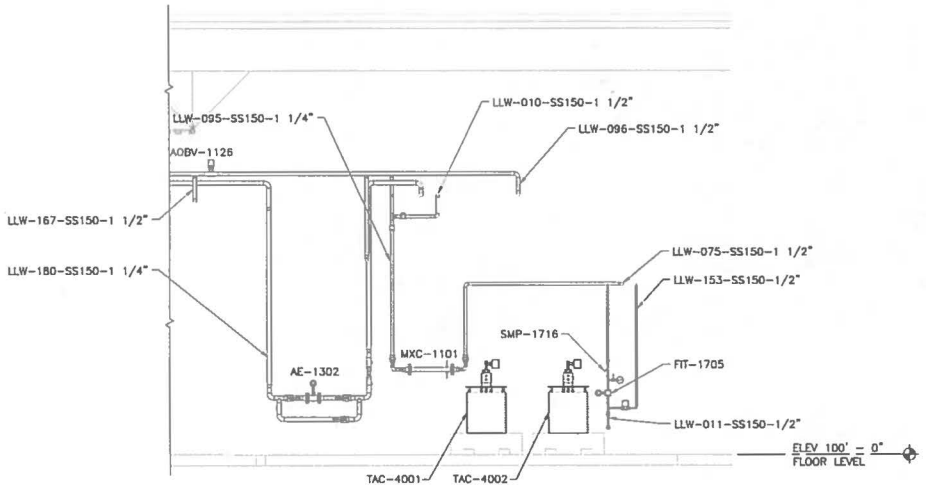

B 0-1101 PROCESS SECTION

3/8"=1'-0"

NO	DATE	CLASS REV	ADC	DESCRIPTION	DWN	DES	CHKD	SUB	APP

AECOM

RLWTF-UP LOW LEVEL WASTE SUBPROJECT

PROCESS SECTIONS

BLDG. 230 TA-50

DRAWN	V DAVISON
DESIGN	S MOORE
CHECKED	E ROGERS
DATE	5/8/14

SUBMITTED: MANNY TARIN

APPROVED FOR RELEASE: ED ARTIGLIA

Los Alamos NATIONAL LABORATORY PO Box 1663 Los Alamos, New Mexico 87545

SHEET D-3108

216 OF 434

CLASSIFICATION | REVIEWER | DATE

PROJECT ID 100761 | DRAWING NO C55864 | REV 0

M. EVELYN ROGERS NEW MEXICO 22184 PROFESSIONAL ENGINEER

5/8/14

File Location: P:\RLWTF LOW-LEVEL WASTE FACILITY\500 CAD\C55864 MAIN BUILDING\SHEETS\14 PROCESS\55864-D-3108-R0.DWG
Plotted By: MOORE, STEPHEN Plot Date: Monday, May 05, 2014

12267

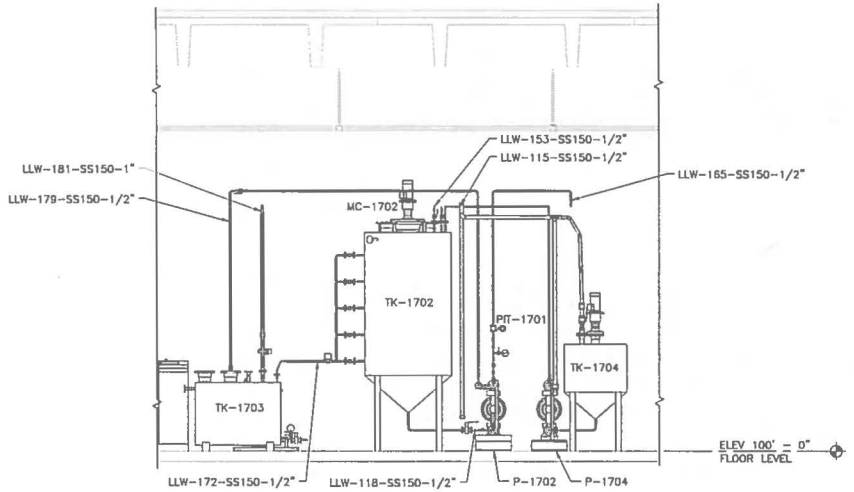

A D-1101 PROCESS SECTION

1' 0 1' 2' 3' 4'
3/8"=1'-0"

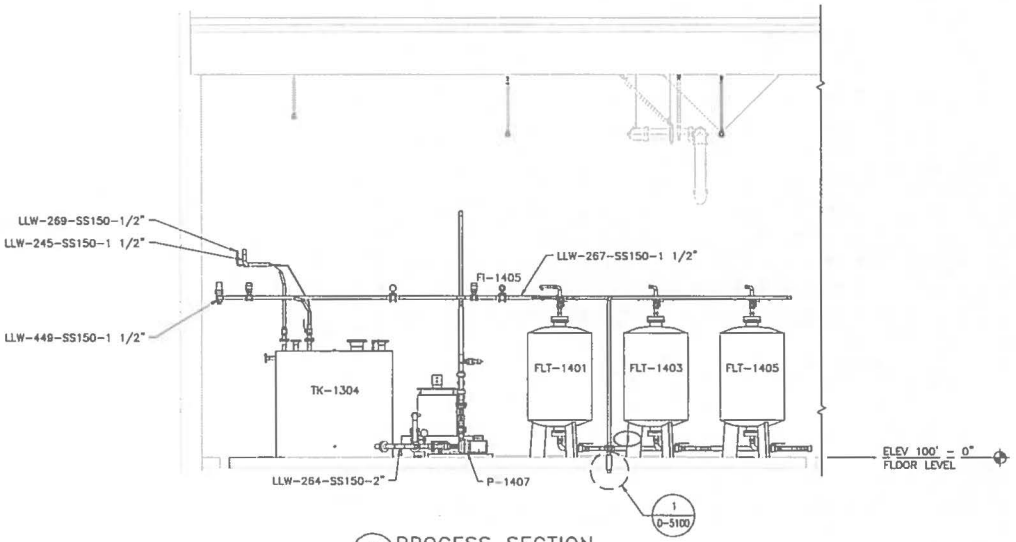

B D-1101 PROCESS SECTION

1' 0 1' 2' 3' 4'
3/8"=1'-0"

GENERAL NOTES

1. IF THIS SHEET IS NOT 24"x 36", THEN IT IS A REDUCED SIZE PLOT. USE GRAPHIC SCALE ACCORDINGLY.

KEYED NOTES

1. FLOOR PENETRATION TRANSITION FROM HDPE PIPE-IN-PIPE TO LLW-267-SS150-1 1/2".

NO	DATE	CLASS REV	ADC	DESCRIPTION	DWN	DES	CHKD	SUB	APP

AECOM

RLWTF-UP LOW LEVEL WASTE SUBPROJECT

PROCESS SECTIONS

BLDG. 230 TA-50

DRAWN	V DAVISON
DESIGN	S MOORE
CHECKED	E ROGERS
DATE	5/6/14

SUBMITTED MANNY TARIN

APPROVED FOR RELEASE ED ARTIGLIA

Los Alamos NATIONAL LABORATORY PO Box 1663 Los Alamos, New Mexico 87545

SHEET D-3109

217 OF 434

CLASSIFICATION | REVIEWER | DATE

PROJECT ID 100761 | DRAWING NO C55864 | REV 0

M. EVELYN ROGERS NEW MEXICO 22184 PROFESSIONAL ENGINEER

File Location: P:\RLWTF LOW-LEVEL WASTE FACILITY\500 CAD\C55864 MAIN BUILDING\SHEETS\14 PROCESS\55864-D-3109-R0.DWG
Plotted By: MOORE, STEPHEN Plot Date: Monday, May 05, 2014

: 12268

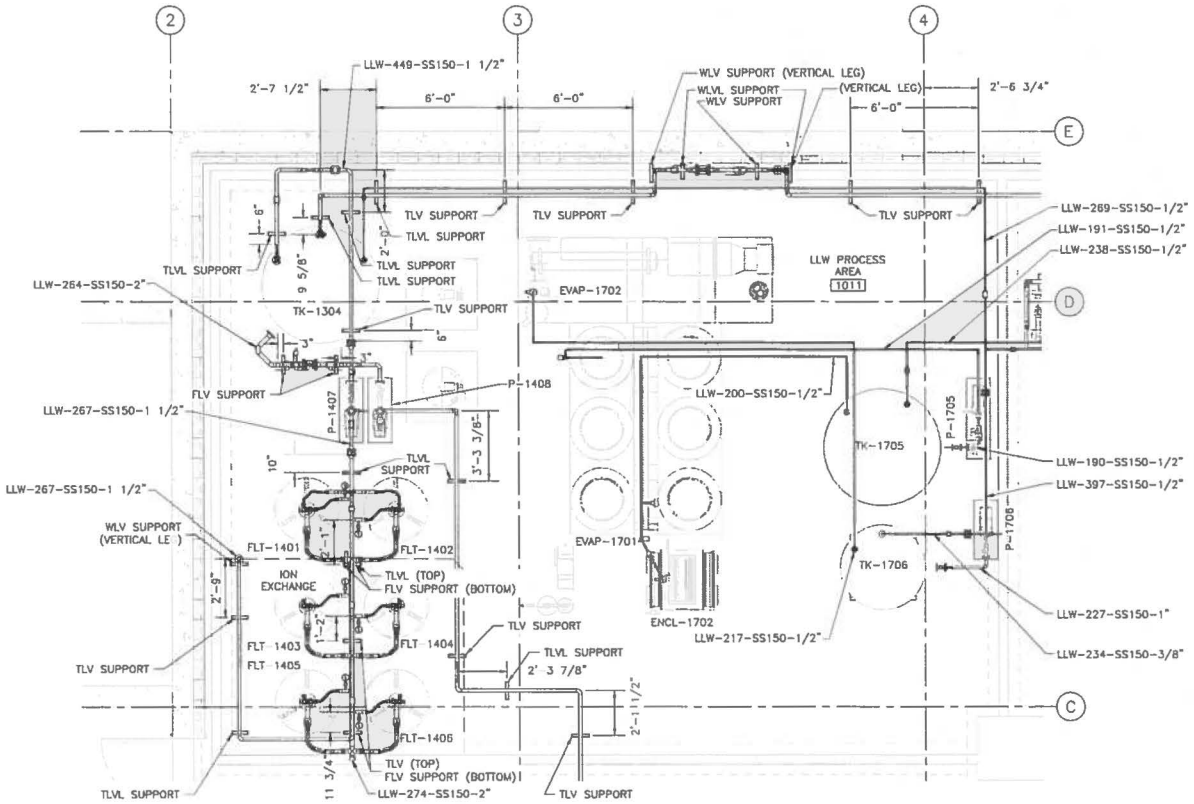

PROCESS BAY ENLARGED PLAN

3/8"=1'-0"

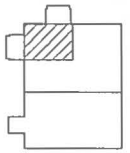

KEY PLAN
SCALE: NONE

GENERAL NOTES

1. IF THIS SHEET IS NOT 24"x 36", THEN IT IS A REDUCED SIZE PLOT. USE GRAPHIC SCALE ACCORDINGLY.
2. REFER TO SHEET D-5100 FOR PIPE SUPPORT CODE TYPES.

NO	DATE	CLASS REV	ADC	DESCRIPTION	DWN	DES	CHKD	SUB	APP

AECOM

RLWTF-UP LOW LEVEL WASTE SUBPROJECT

PROCESS BAY ENLARGED PLAN

BLDG. 230 TA-50

DRAWN	V DAVISON
DESIGN	S MOORE
CHECKED	E ROGERS
DATE	5/8/14

SUBMITTED: MANNY TARIN

APPROVED FOR RELEASE: ED ARTIGLIA

Los Alamos NATIONAL LABORATORY PO Box 1663 Los Alamos, New Mexico 87545

SHEET D-4100

218 OF 434

CLASSIFICATION | REVIEWER | DATE

PROJECT ID 100761 | DRAWING NO C55864 | REV 0

M. EVELYN ROGERS NEW MEXICO 22184 PROFESSIONAL ENGINEER 5/15/14

69269

File Location: P:\RLWTF LOW-LEVEL WASTE FACILITY\500 CAD\C55864 MAIN BUILDING\SHEETS\14 PROCESS\55864-D-4100-R0.DWG
Plotted By: MOORE, STEPHEN Plot Date: Wednesday, May 14, 2014

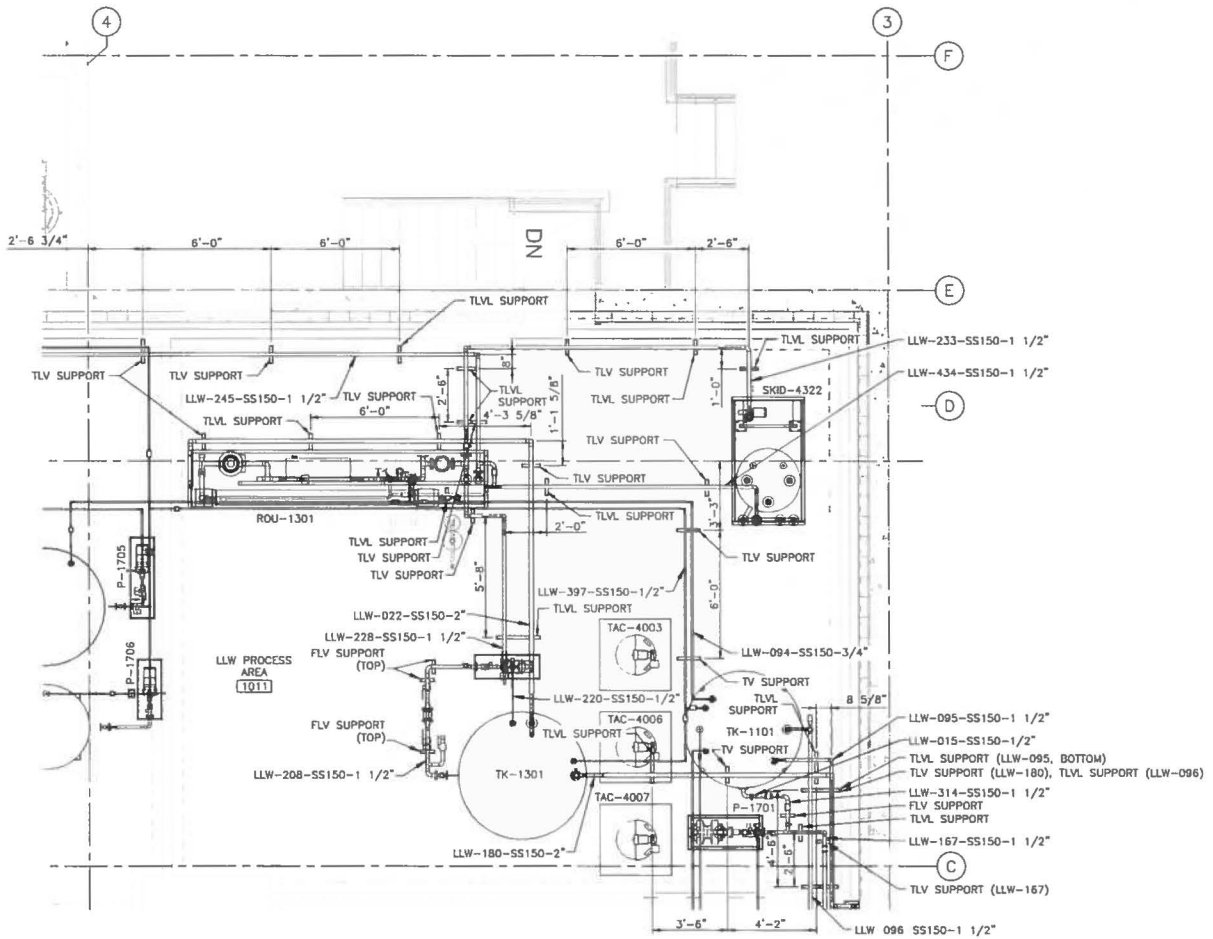

PROCESS BAY ENLARGED PLAN

3/8"=1'-0"

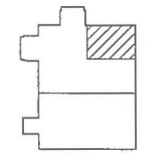

KEY PLAN
SCALE: NONE

GENERAL NOTES

1. IF THIS SHEET IS NOT 24"x 36", THEN IT IS A REDUCED SIZE PLOT. USE GRAPHIC SCALE ACCORDINGLY.
2. REFER TO SHEET D-5101 FOR PIPE SUPPORT CODE TYPE.

NO	DATE	CLASS REV	ADC	DESCRIPTION	DWN	DES	CHKD	SUB	APP

AECOM

RLWTF-UP LOW LEVEL WASTE SUBPROJECT

PROCESS BAY ENLARGED PLAN

BLDG. 230 TA-50

DRAWN	V DAVISON
DESIGN	S MOORE
CHECKED	E ROGERS
DATE	5/8/14

SUBMITTED: MANNY TARIN

APPROVED FOR RELEASE: ED ARTIGLIA

Los Alamos NATIONAL LABORATORY — PO Box 1663, Los Alamos, New Mexico 87545

SHEET D-4101

219 OF 434

CLASSIFICATION | REVIEWER | DATE

PROJECT ID 100761 | DRAWING NO C55864 | REV 0

M. EVELYN ROGERS — NEW MEXICO — 22184 — PROFESSIONAL ENGINEER — 5/8/14

SIZE: D

File Location: P:\RLWTF LOW-LEVEL WASTE FACILITY\500 CAD\C55864 MAIN BUILDING\SHEETS\14 PROCESS\55864-D-4101-MOD.DWG
Plotted By: MOORE, STEPHEN Plot Date: Wednesday, May 14, 2014

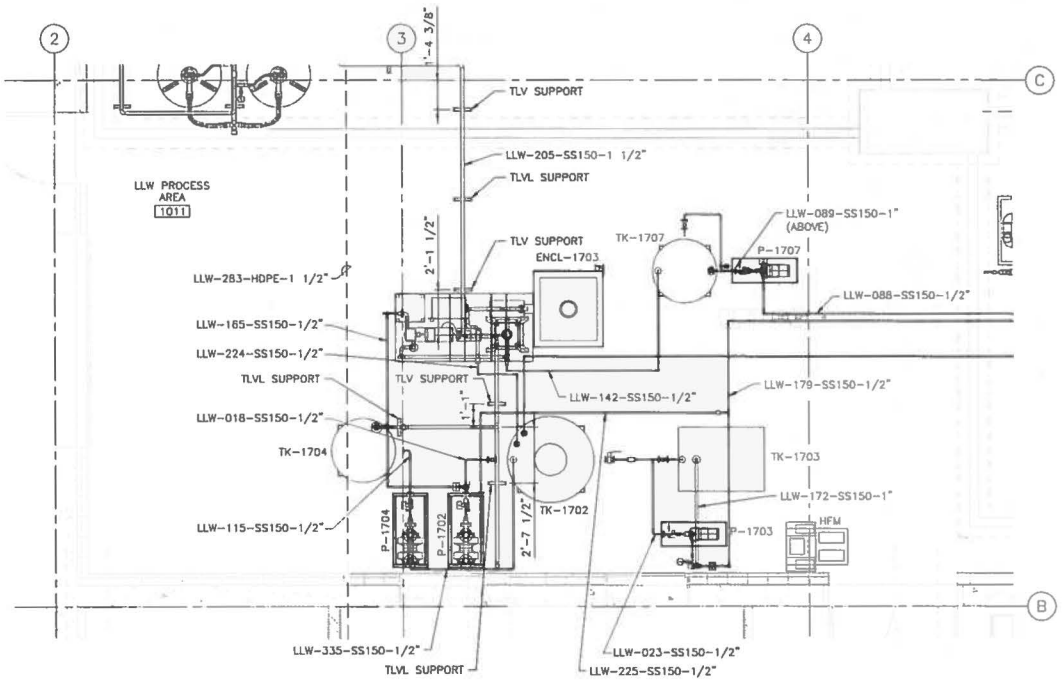

PROCESS BAY ENLARGED PLAN

3/8"=1' 0"

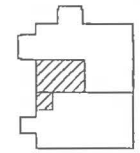

KEY PLAN
SCALE: NONE

GENERAL NOTES

1. IF THIS SHEET IS NOT 24"x 36", THEN IT IS A REDUCED SIZE PLOT. USE GRAPHIC SCALE ACCORDINGLY.
2. REFER TO SHEET D-5101 FOR PIPE SUPPORT CODE TYPE.

NO	DATE	CLASS REV	ADC	DESCRIPTION	DWN	DES	CHKD	SUB	APP

AECOM

RLWTF-UP LOW LEVEL WASTE SUBPROJECT

PROCESS BAY ENLARGED PLAN

BLDG. 230 TA-50

DRAWN	V DAVISON
DESIGN	S MOORE
CHECKED	E ROGERS
DATE	5/8/14

SUBMITTED MANNY TARIN

APPROVED FOR RELEASE ED ARTIGLIA

Los Alamos NATIONAL LABORATORY PO Box 1663 Los Alamos, New Mexico 87545

SHEET D-4102

220 OF 434

CLASSIFICATION | REVIEWER | DATE

PROJECT ID 100761 | DRAWING NO C55864 | REV 0

M. EVELYN ROGERS NEW MEXICO 22184 PROFESSIONAL ENGINEER 5/15/14

File Location: P:\RLWTF LOW-LEVEL WASTE FACILITY\500 CAD\C55864 MAIN BUILDING\SHEETS\14 PROCESS\55864-D-4102-RD.DWG
Plotted By: DAVISON, VANESSA; Plot Date: Monday, May 12, 2014

12271

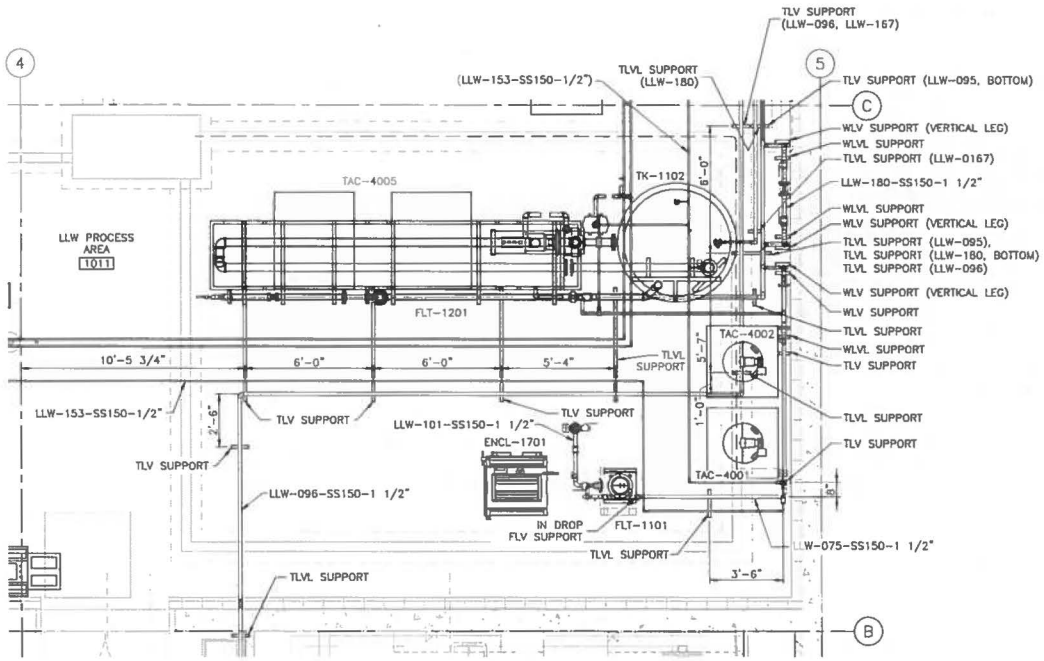

PROCESS BAY ENLARGED PLAN

3/8"=1'-0"

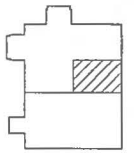

KEY PLAN
SCALE: NONE

GENERAL NOTES

1. IF THIS SHEET IS NOT 24"x 36", THEN IT IS A REDUCED SIZE PLOT. USE GRAPHIC SCALE ACCORDINGLY.
2. REFER TO SHEET D-5100 FOR PIPE SUPPORT CODE TYPES.

NO	DATE	CLASS REV	ADC	DESCRIPTION	DWN	DES	CHKD	SUB	APP

AECOM

RLWTF-UP LOW LEVEL WASTE SUBPROJECT

PROCESS BAY ENLARGED PLAN

DRAWN	V DAVISON
DESIGN	S MOORE
CHECKED	E ROGERS
DATE	5/8/14

BLDG. 230 TA-50

SUBMITTED: MANNY TARIN

APPROVED FOR RELEASE: ED ARTIGLIA

Los Alamos NATIONAL LABORATORY PO Box 1663 Los Alamos, New Mexico 87545

SHEET D-4103

221 OF 434

CLASSIFICATION | REVIEWER | DATE

PROJECT ID 100761 | DRAWING NO C55864 | REV 0

M. EVELYN ROGERS NEW MEXICO 22184 PROFESSIONAL ENGINEER

5/8/14

File: Location: P:\RLWTF LOW-LEVEL WASTE FACILITY\300 CAD\C55864 MAIN BUILDINGS\SHEETS\14 PROCESS\55864-D-4103-RO.DWG
Plotted By: MOORE, STEPHEN Plot Date: Wednesday, May 14, 2014

121221

SYSTEM NO. C-AJ-5091

F RATING – 2 HR
T RATINGS – 0 AND 1 HR (SEE ITEMS 2 AND 4)
L RATING AT AMBIENT – 4 CFM/SQ FT
L RATING AT 400 F – LESS THAN 1 CFM/SQ FT

(1) FLOOR OR WALL ASSEMBLY – MIN 4-1/2 IN. (114 MM) THICK REINFORCED LIGHTWEIGHT OR NORMAL WEIGHT (100-150 PCF OR 1600-2400 KG/M3) CONCRETE. WALL MAY ALSO BE CONSTRUCTED OF ANY UL CLASSIFIED CONCRETE BLOCKS*. MAX DIAM OF OPENING IS 19-1/2 IN. (495 MM).
SEE CONCRETE BLOCKS (CAZT) CATEGORY IN THE FIRE RESISTANCE DIRECTORY FOR NAMES OF MANUFACTURERS.

(2) METALLIC SLEEVE – (OPTIONAL) – NOM 20 IN. (508 MM) DIAM (OR SMALLER) SCHEDULE 10 (OR HEAVIER) STEEL SLEEVE CAST OR GROUTED INTO FLOOR OR WALL ASSEMBLY, FLUSH WITH FLOOR OR WALL SURFACES OR EXTENDING A MAX OF 3 IN. (76 MM) ABOVE FLOOR OR BEYOND BOTH SURFACES OF WALL. IF THE STEEL SLEEVE EXTENDS BEYOND THE TOP SURFACE OF THE FLOOR OR BOTH SURFACES OF THE WALL, THE T RATING OF THE FIRESTOP SYSTEM IS 0 HR.

2A. SHEET METAL SLEEVE – (OPTIONAL) – MAX 6 IN. (152 MM) DIAM, MIN 26 GA GALV STEEL PROVIDED WITH A 26 GA GALV STEEL SQUARE FLANGE SPOT WELDED TO THE SLEEVE AT APPROXIMATELY MID- HEIGHT, OR FLUSH WITH BOTTOM OF SLEEVE IN FLOORS, AND SIZED TO BE A MIN OF 2 IN. (51 MM) LARGER THAN THE SLEEVE DIAM. THE SLEEVE IS TO BE CAST IN PLACE FLUSH WITH BOTTOM SURFACE OF FLOOR AND MAY EXTEND A MAX OF 1 IN. (25 MM) ABOVE THE TOP SURFACE OF THE FLOOR.

2B. SHEET METAL SLEEVE – (OPTIONAL) – MAX 12 IN. (305 MM) DIAM, MIN 24 GA GALV STEEL PROVIDED WITH A 24 GA GALV STEEL SQUARE FLANGE SPOT WELDED TO THE SLEEVE AT APPROXIMATELY MID- HEIGHT, OR FLUSH WITH BOTTOM OF SLEEVE IN FLOORS, AND SIZED TO BE A MIN OF 2 IN. (51 MM) LARGER THAN THE SLEEVE DIAM. THE SLEEVE IS TO BE CAST IN PLACE FLUSH WITH BOTTOM SURFACE OF FLOOR AND MAY EXTEND A MAX OF 1 IN. (25 MM) ABOVE THE TOP SURFACE OF THE FLOOR.

(3) THROUGH PENETRANTS – ONE METALLIC PIPE OR TUBING TO BE INSTALLED EITHER CONCENTRICALLY OR ECCENTRICALLY WITHIN THE FIRESTOP SYSTEM. PIPE OR TUBING TO BE RIGIDLY SUPPORTED ON BOTH SIDES OF FLOOR OR WALL ASSEMBLY. THE FOLLOWING TYPES AND SIZES OF METALLIC PIPES OR TUBING MAY BE USED:
A. STEEL PIPE – NOM 12 IN. (305 MM) DIAM (OR SMALLER) SCHEDULE 10 (OR HEAVIER) STEEL PIPE.
B. IRON PIPE – NOM 12 IN. (305 MM) DIAM (OR SMALLER) CAST OR DUCTILE IRON PIPE.
C. COPPER PIPE – NOM 6 IN. (152 MM) DIAM (OR SMALLER) REGULAR (OR HEAVIER) COPPER PIPE.
D. COPPER TUBING – NOM 8 IN. (152 MM) DIAM (OR SMALLER) TYPE L (OR HEAVIER) COPPER TUBING.

(4) PIPE COVERING – MIN 1/2 IN. (13 MM) TO MAX 2 IN. (51 MM) THICK HOLLOW CYLINDRICAL HEAVY DENSITY (MIN 3.5 PCF OR 56 KG/M3) GLASS FIBER UNITS JACKETED ON THE OUTSIDE WITH AN ALL-SERVICE JACKET. LONGITUDINAL JOINTS SEALED WITH METAL FASTENERS OR FACTORY-APPLIED, SELF-SEALING LAP TAPE. TRANSVERSE JOINTS SECURED WITH METAL FASTENERS OR WITH BUTT TAPE SUPPLIED WITH THE PRODUCT. THE ANNULAR SPACE BETWEEN THE INSULATED PIPE AND THE EDGE OF THE PERIPHERY OF THE OPENING SHALL BE MIN 1/2 IN. (13 MM) TO A MAX 2-1/4 IN. (57 MM). WHEN THICKNESS OF PIPE COVERING IS LESS THAN 2 IN. (51 MM), THE T RATING FOR THE FIRESTOP SYSTEM IS 0 HR.
SEE PIPE EQUIPMENT COVERING – MATERIALS – (BRGU) CATEGORY IN THE BUILDING MATERIALS DIRECTORY FOR NAMES OF MANUFACTURERS. ANY PIPE COVERING MATERIAL MEETING THE ABOVE SPECIFICATIONS AND BEARING THE UL CLASSIFICATION MARKING WITH A FLAME SPREAD INDEX OF 25 OR LESS AND A SMOKE DEVELOPED INDEX OF 50 OR LESS MAY BE USED.

4A. PIPE COVERING – (NOT SHOWN) – AS AN ALTERNATE TO ITEM 4, MAX 2 IN. (51 MM) THICK CYLINDRICAL CALCIUM SILICATE (MIN 14 PCF) UNITS SIZED TO THE OUTSIDE DIAM OF THE PIPE OR TUBE MAY BE USED. PIPE INSULATION SECURED WITH STAINLESS STEEL BANDS OR MIN 8 AWG STAINLESS STEEL WIRE SPACED MAX 12 IN. (305 MM) OC. THE ANNULAR SPACE SHALL BE MIN 1/2 IN. (13 MM) TO MAX 2-1/4 IN. (57 MM).

(5) FIRESTOP SYSTEM – THE FIRESTOP SYSTEM SHALL CONSIST OF THE FOLLOWING:
A. PACKING MATERIAL – MIN 4 IN. (102 MM) THICKNESS OF MIN 4 PCF (64 KG/M3) MINERAL WOOL BATT INSULATION FIRMLY PACKED INTO OPENING AS A PERMANENT FORM. PACKING MATERIAL TO BE RECESSED FROM TOP SURFACE OF FLOOR OR FROM BOTH SURFACES OF WALL AS REQUIRED TO ACCOMMODATE THE REQUIRED THICKNESS OF FILL MATERIAL.
B. FILL, VOID OR CAVITY MATERIAL* – SEALANT – MIN 1/2 IN. (13 MM) THICKNESS OF FILL MATERIAL APPLIED WITHIN THE ANNULUS, FLUSH WITH TOP SURFACE OF FLOOR OR WITH BOTH SURFACES OF WALL.
HILTI CONSTRUCTION CHEMICALS, DIV OF HILTI INC – FS-ONE SEALANT
*BEARING THE UL CLASSIFICATION MARK

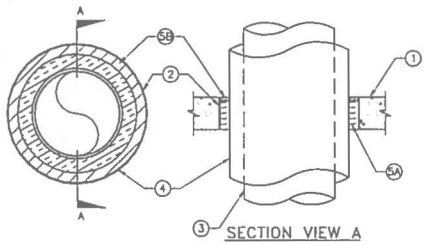

SECTION VIEW A

TYPICAL FIRESTOP DETAIL
SCALE: NONE

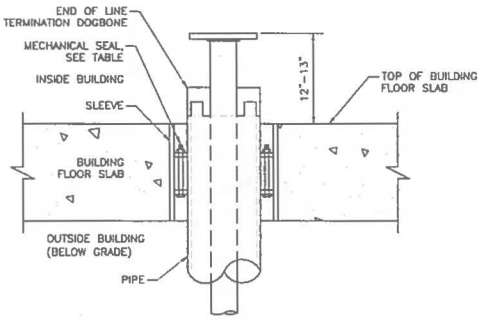

SECTION VIEW

VERTICAL NON-METALLIC PIPE-IN-PIPE DETAIL
1 D-1101 1 D-3100 1 D-3105 1 D-3108
SCALE: NONE

MECHANICAL SEAL TABLE			
NOMINAL PIPE SIZE	NOMINAL SLEEVE SIZE	METRASEAL MODEL NO.	REMARKS
4"	6"	10MS-300ES	HDPE PIPE, SLEEVE SCHEDULE 40 STEEL PIPE

NO	DATE	CLASS REV	ADC	DESCRIPTION	DWN	DES	CHKD	SUB	APP

AECOM

RLWTF-UP LOW LEVEL WASTE SUBPROJECT

PIPE PENETRATION DETAILS

DRAWN: V DAVISON
DESIGN: S MOORE
CHECKED: E ROGERS
DATE: 5/8/14

BLDG. 230 TA-50

SUBMITTED: MANNY TARIN
APPROVED FOR RELEASE: ED ARTIGLIA

Los Alamos NATIONAL LABORATORY PO Box 1663 Los Alamos, New Mexico 87545

SHEET: D-5100
222 OF 434

CLASSIFICATION | REVIEWER | DATE

PROJECT ID: 100761
DRAWING NO: C55864
REV: 0

M. LLEWELYN ROGERS NEW MEXICO 22184 REGISTERED PROFESSIONAL ENGINEER

File Location: P:\RLWTF LOW-LEVEL WASTE FACILITY\SAD CAD\C55864 MAIN BUILDING\SHEETS\14 PROCESS\55864-D-5100-R0.DWG
Plotted By: DAVIDA MADDEN Plot Date: Monday, May 12, 2014

12273

ALLOWABLE PIPE COMPONENT LOADS

NAME	SKETCH	TYPE CODE	MAX ALLOWABLE LOAD RELATIVE TO PIPE (lbf) NOMINAL PIPE SIZE	LATERAL	VERTICAL	LONGITUDINAL	DESCRIPTION	NOTES
TRAPEZE V		TV	NA	NA	(1)	NA	HORIZONTAL CHANNEL SUSPENDED FROM ALL THREAD ROD (ATR) TO TRANSFER VERTICAL LOADS	B22 OR B22A CHANNEL, USE B2000 SERIES CLAMP AS NECESSARY TO KEEP PIPES SEPARATED
TRAPEZE LV	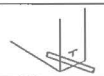	TLV	1/2–3/4"	100	600	NA	HORIZONTAL CHANNEL SUSPENDED FROM ATR BRACED WITH CHANNEL TO TRANSFER LATERAL LOADS	SIMILAR TO TV W/ADDITION OF LATERAL BRACES. USE B2417 SERIES CLAMP
			1"	75	600			
			1–1/2–2–1/2"	125	800			
			3	350	1000			
TRAPEZE VL		TVL	1/2–2"	NA	(1)	255	HORIZONTAL CHANNEL SUSPENDED FROM ATR BRACED WITH CHANNEL TO TRANSFER LONGITUDINAL LOADS	SIMILAR TO TV W/ADDITION OF LONGITUDINAL BRACES. USE PAIR OF B3373 SERIES CLAMPS W/LEGS ORIENTED VERTICALLY
			2–1/2"			390		
			3"			530		
TRAPEZE LVL	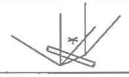	TLVL	1/2"	75	400	50	HORIZONTAL CHANNEL SUSPENDED FROM ATR BRACED WITH CHANNEL TO TRANSFER LATERAL AND LONGITUDINAL LOADS	SIMILAR TO TV W/ADDITION OF LATERAL AND LONGITUDINAL BRACES. USE B2000 SERIES CLAMP
			3/4–1"	100	600	75		
			1–1/2"	250	800	150		
			2–3"	250	800	200		
WALL V	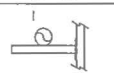	WV	NA	NA	960	NA	VERTICAL CHANNEL ATTACHED TO WALL WITH CHANNEL COMPONENTS TO TRANSFER VERTICAL LOADS	SECURE B409 (MAX LENGTH = 12") TO CHANNEL, USE B356 TO GUIDE LATERAL MOVEMENT, AS REQUIRED
WALL LV	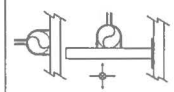	WLV	1/2–3/4"	100	600	NA	VERTICAL CHANNEL ATTACHED TO WALL WITH CHANNEL COMPONENTS TO TRANSFER LATERAL AND VERTICAL LOADS	SECURE B409 (MAX LENGTH = 12") TO CHANNEL, USE B2417 PIPE GUIDE OR OMIT B409 AND USE B2417 ALONE NOTE: SWITCH LATERAL AND VERTICAL ALLOWABLE LOAD COLUMNS IF B2417 IS USED W/O B409
			1"	75	600			
			1–1/2–2–1/2"	125	800			
			3	350	960			
WALL LVL		WLVL	1/2"	400	75	50	VERTICAL CHANNEL ATTACHED TO WALL WITH CHANNEL COMPONENTS TO TRANSFER LATERAL, VERTICAL AND LONGITUDINAL LOADS	SECURE B2000 SERIES CLAMP TO WALL CHANNEL
			3/4–1"	600	100	75		
			1–1/2"	800	250	150		
			2–3"	800	250	200		
CHANNEL LV		CLV	1/2–3/4"	100	600	NA	CHANNEL COMPONENTS ATTACHED TO SUPPORT CHANNEL TO TRANSFER LATERAL AND VERTICAL LOADS	SECURE B2417 PIPE GUIDE TO SUPPORT CHANNEL
			1"	75	600			
			1–1/2–2–1/2"	125	800			
			3	350	1000			
CHANNEL LVL		CLVL	1/2"	75	400	50	CHANNEL COMPONENTS ATTACHED TO SUPPORT CHANNEL TO TRANSFER LATERAL, VERTICAL AND LONGITUDINAL LOADS	SECURE B2000 SERIES CLAMP TO SUPPORT CHANNEL
			3/4–1"	100	600	75		
			1–1/2"	250	800	150		
			2–3"	250	800	200		
FLOOR V	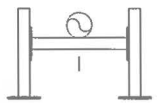	FV	NA	NA	(1)	NA	CHANNEL COMPONENTS ANCHORED TO FLOOR TO TRANSFER VERTICAL LOADS	ATTACH TO FLOOR USING HILTI KH–EZ ø1/2"x3" LG SCREW ANCHORS
FLOOR LV	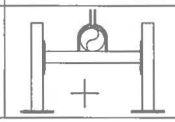	FLV	1/2–3/4"	100	600	NA	CHANNEL COMPONENTS ANCHORED TO FLOOR TO TRANSFER LATERAL AND VERTICAL LOADS	ATTACH TO FLOOR USING HILTI KH–EZ ø1/2"x3" LG SCREW ANCHORS. USE B2417 PIPE GUIDE
			1"	75	600			
			1.5" TO 2.5"	125	800			
			3	350	1000			

KEYED NOTES

(1) REFER TO DETAIL SHEETS FOR ALL ALLOWABLE LOADS (DEPENDENT ON LENGTH).

NO	DATE	CLASS REV	ADC	DESCRIPTION	DWN	DES	CHKD	SUB	APP

AECOM

RLWTF–UP LOW LEVEL WASTE SUBPROJECT

ALLOWABLE PIPE COMPONENT LOADS TABLE

DRAWN	V DAVISON
DESIGN	R YOUNG
CHECKED	H MAI
DATE	5/8/14

BLDG. 230 TA–50

SUBMITTED MANNY TARIN

APPROVED FOR RELEASE ED ARTIGLIA

Los Alamos NATIONAL LABORATORY PO Box 1663 Los Alamos, New Mexico 87545

SHEET D–5101

223 OF 434

CLASSIFICATION REVIEWER DATE

PROJECT ID 100761

DRAWING NO C55864

REV 0

BRENDA P YOUNG NEW MEXICO 18822 REGISTERED PROFESSIONAL ENGINEER 5/15/14

File Location: P:\RLWTF LOW-LEVEL WASTE FACILITY\200 CAD\C55864 MAIN BUILDING\SHEETS\V4 PROCESS\55864-D-5101-RD.DWG
Plotted By: DAVISON, WADE2X; Plot Date: Monday, May 12, 2014; Plot Stamp Name: LAM, ARCH B PDF; Autodesk 1; Linear: 1.0000000 Measurement: 0;
Plot CTB File: LAM_C.ctb

1227L

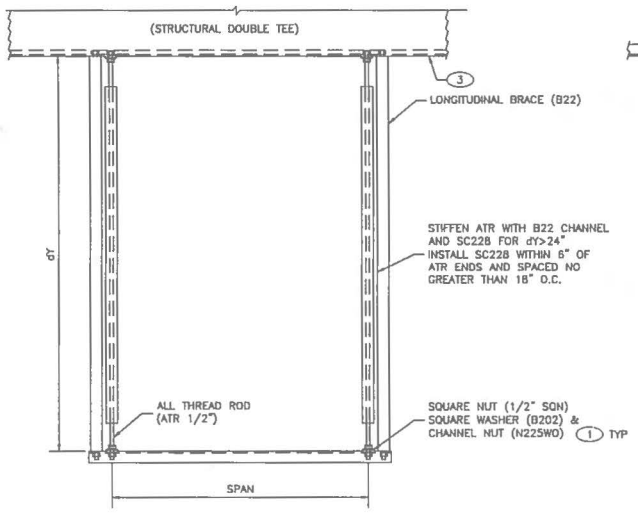

FRONT VIEW

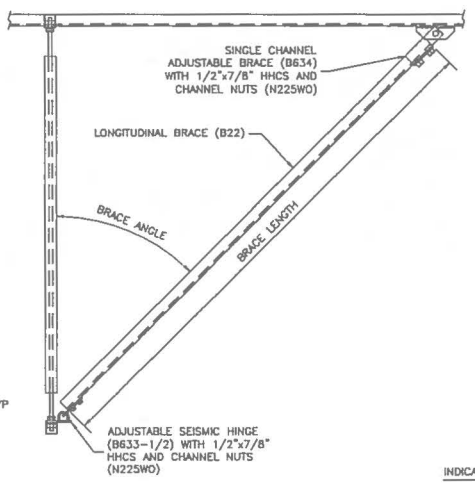

SIDE VIEW

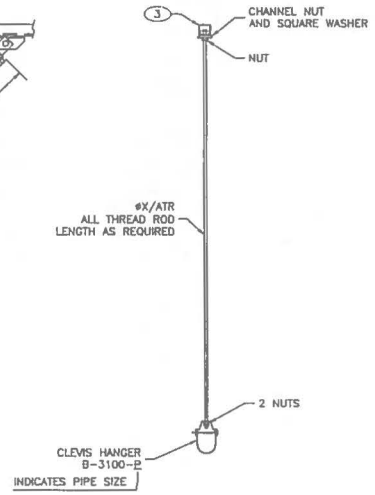

FRONT VIEW

X = VARIES W/ B3100-P

1 TRAPEZE VERTICAL LONGITUDINAL (TVL) SUPPORT

1 1/2"=1'-0"

2 CLEVIS HANGER

1 1/2"=1'-0"

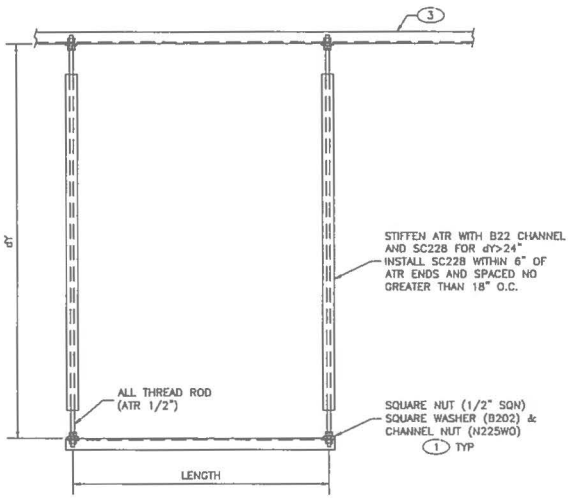

FRONT VIEW

3 TRAPEZE VERTICAL (TV) SUPPORT

1 1/2"=1'-0"

ALLOWABLE CHANNEL LOADS

NUMBER	DESCRIPTION	BEAM OR COLUMN	MAXIMUM LENGTH (IN.)	B-LINE CATALOG PAGE NUMBER	ORIENTATION	FORCE (lbf.)
B22	1 5/8x1 5/8 12 GA. CHANNEL	COLUMN	120	22-23	VERTICAL LEG	1068
B22	1 5/8x1 5/8 12 GA. CHANNEL	COLUMN	120	22-23	30-DEG (MIN.) ANGLE BRACE	534
B22	1 5/8x1 5/8 12 GA. CHANNEL	COLUMN	120	22-23	45-DEG ANGLE BRACE	755
B22	1 5/8x1 5/8 12 GA. CHANNEL	COLUMN	120	22-23	60-DEG (MAX.) ANGLE BRACE	925
B22	1 5/8x1 5/8 12 GA. CHANNEL	COLUMN	60	22-23	VERTICAL LEG	2025
B22	1 5/8x1 5/8 12 GA. CHANNEL	COLUMN	60	22-23	30-DEG (MIN.) ANGLE BRACE	1012
B22	1 5/8x1 5/8 12 GA. CHANNEL	COLUMN	60	22-23	45-DEG ANGLE BRACE	1453
B22	1 5/8x1 5/8 12 GA. CHANNEL	COLUMN	60	22-23	60-DEG (MAX.) ANGLE BRACE	1754
B22	1 5/8x1 5/8 12 GA. CHANNEL	BEAM	24	22-23	HORIZONTAL	851/1702
B22	1 5/8x1 5/8 12 GA. CHANNEL	BEAM	36	22-23	HORIZONTAL	568/1135
B22	1 5/8x1 5/8 12 GA. CHANNEL	BEAM	42	22-23	HORIZONTAL	486/972
HALFEN	1 5/8x7/8 DOUBLE TEE CHANNEL	NA	NA	NA	SINGLE PULLOUT	2000
HALFEN	1 5/8x7/8 DOUBLE TEE CHANNEL	NA	NA	NA	DOUBLE PULLOUT	2900
HALFEN	1 5/8x7/8 DOUBLE TEE CHANNEL	NA	NA	NA	SHEAR	1650

NOTES
1. BEAM FORCE FORMAT IS POINT LOAD/UNIFORM LOAD.
2. REFER TO ALLOWABLE PIPE COMPONENTS TABLE ON DRAWING D-5101 FOR INDIVIDUAL PIPE.
3. ADDITIONAL ANALYSIS IS REQUIRED FOR SUPPORTS NOT BOUNDED BY VALUES IN TABLE.

GENERAL NOTES

1. IF THIS SHEET IS NOT 24"x 36", THEN IT IS A REDUCED SIZE PLOT. USE GRAPHIC SCALE ACCORDINGLY.
2. CHANNEL/STRUT PART NUMBERS ARE FOR B-LINE PRODUCTS. OTHER SUPPLIERS/MANUFACTURER'S PRODUCTS SHALL BE VERIFIED FOR STRUCTURAL ADEQUACY.
3. FASTENERS SHALL BE SECURED PER MANUFACTURER'S RECOMMENDATIONS.
4. REFER TO SHEET D-5101 FOR PIPE CLAMP ALLOWABLE LOADS.

KEYED NOTES

(1) TIGHTEN SQUARE NUT TO SECURE CHANNEL COMPONENTS.

(2) AT TIME OF PIPE INSTALLATION, PIPING PLAN VIEWS SHALL DENOTE LOCATION AND TYPE OF SUPPORT REQUIRED. REFERENCE CALLOUTS WILL BE COMPLETED AT THAT TIME.

(3) B22 SINGLE CHANNEL OR HALFEN DOUBLE-TEE STEM ANCHOR. OPTIONAL SUPPORT INSTALLATION DETAIL CAN BE USED DEPENDING ON ATTACHMENT ORIENTATION. SEE SHEET D-5103 DETAIL 2.

NO	DATE	CLASS /REV	ADC	DESCRIPTION	DWN	DES	CHKD	SUB	APP

AECOM

RLWTF-UP LOW LEVEL WASTE SUBPROJECT

PIPE SUPPORT DETAILS

DRAWN V DAVISON 5/8/14
DESIGN R YOUNG 5/8/14
CHECKED H MAI 5/8/14
DATE 5/8/14

BLDG. 230 TA-50

SUBMITTED MANNY TARIN

APPROVED FOR RELEASE ED ARTIGLIA

Los Alamos NATIONAL LABORATORY PO Box 1663 Los Alamos, New Mexico 87545

SHEET D-5102
224 OF 434

CLASSIFICATION REVIEWER DATE

PROJECT ID 100761

DRAWING NO C55864

REV 0

51221

File Location: P:\RLWTF LOW-LEVEL WASTE FACILITY\500 CAD\C55864 MAIN BUILDING\SHEETS\14 PROCESS\55864-D-5102-R0.DWG
Plotted By: MOORE, STEPHEN Plot Date: Monday, May 05, 2014 Plot CTB File: LMI.CTB Page Setup Name: PDF-B-LMI Scale: 1: 1.0000 Measurement: 0.

GENERAL NOTES

1. IF THIS SHEET IS NOT 24"x 36", THEN IT IS A REDUCED SIZE PLOT. USE GRAPHIC SCALE ACCORDINGLY.
2. CHANNEL/STRUT PART NUMBERS ARE FOR B-LINE PRODUCTS. OTHER SUPPLIERS/MANUFACTURER'S PRODUCTS SHALL BE VERIFIED FOR STRUCTURAL ADEQUACY.
3. FASTENERS SHALL BE SECURED PER MANUFACTURER'S RECOMMENDATIONS.
4. REFER TO ALLOWABLE CHANNEL LOADS TABLE, SEE SHEET D-5004.

KEYED NOTES

1. TIGHTEN SQUARE NUT TO SECURE CHANNEL COMPONENTS.
2. AT TIME OF PIPE INSTALLATION, PIPING PLAN VIEWS SHALL DENOTE LOCATION AND TYPE OF SUPPORT REQUIRED. REFERENCE CALLOUTS WILL BE COMPLETED AT THAT TIME.
3. B22 SINGLE CHANNEL OR HALFEN DOUBLE-TEE STEM ANCHOR. OPTIONAL SUPPORT INSTALLATION DETAIL CAN BE USED DEPENDING ON ATTACHMENT ORIENTATION. SEE DETAIL 2 ON THIS SHEET.

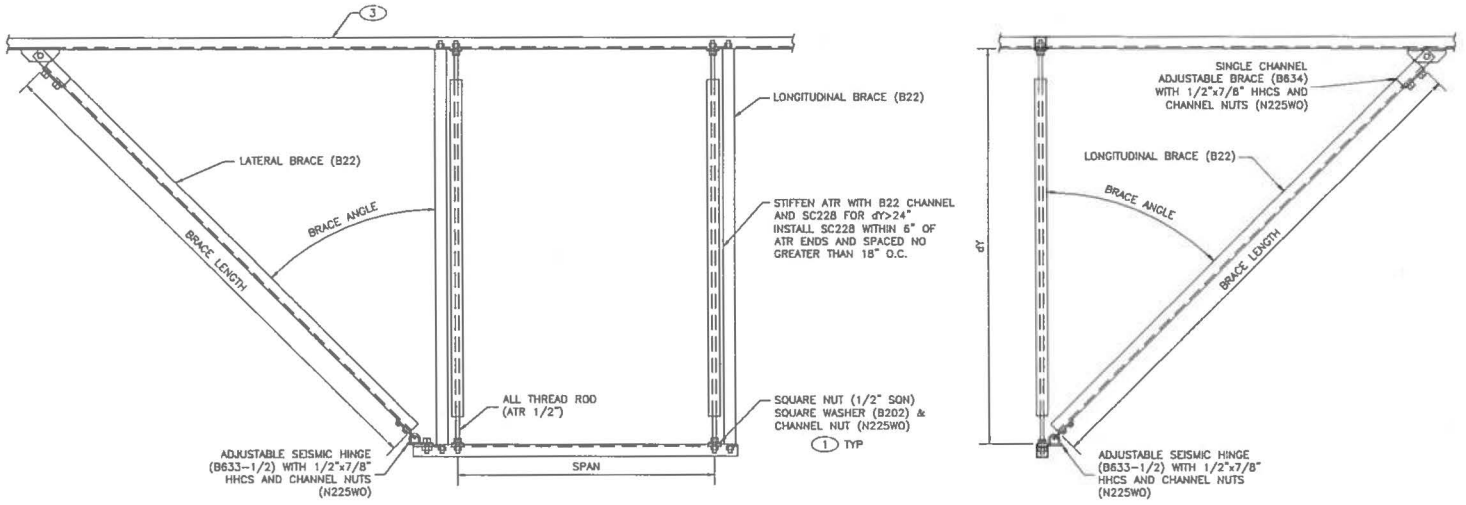

FRONT VIEW

SIDE VIEW

1 TRAPEZE LATERAL VERTICAL LONGITUDINAL (TLVL) SUPPORT
2

4" 0 6" 1'
1 1/2"=1'-0"

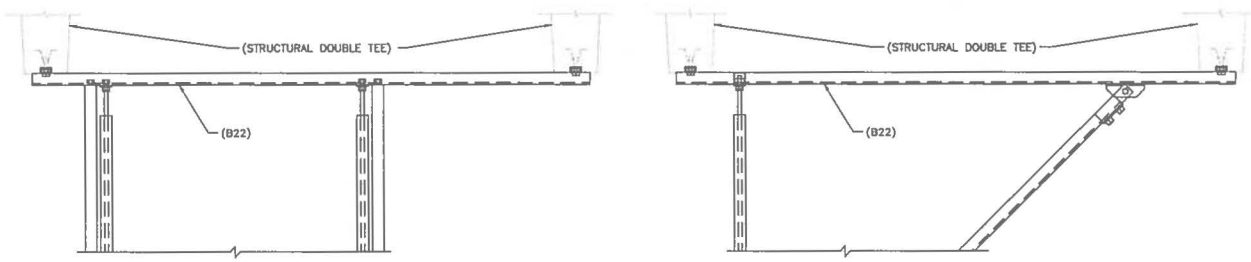

OPTIONAL FRONT VIEW

OPTIONAL SIDE VIEW

2 OPTIONAL SUPPORT INSTALLATION DETAIL
2

4" 0 6" 1'
1 1/2"=1'-0"

NO	DATE	CLASS REV	ADC	DESCRIPTION	DWN	DES	CHKD	SUB	APP

AECOM

RLWTF-UP LOW LEVEL WASTE SUBPROJECT

PIPE SUPPORT DETAILS

BLDG. 230 TA-50

DRAWN	V DAVISON
DESIGN	R YOUNG
CHECKED	H MAI
DATE	5/8/14

SUBMITTED MANNY TARIN

APPROVED FOR RELEASE ED ARTIGLIA

Los Alamos NATIONAL LABORATORY PO Box 1663 Los Alamos, New Mexico 87545

SHEET D-5103

225 OF 434

CLASSIFICATION | REVIEWER | DATE

PROJECT ID 100761 | DRAWING NO C55864 | REV 0

File Location: P:\RLWTF LOW-LEVEL WASTE FACILITY\500 EAD\C55864 MAIN BUILDING\SHEETS\14 PROCESS\55864-D-5103-RLDWG
Plotted By: MOORE, STEPHEN Plot Date: Monday, May 05, 2014; Plot CTB File: LANL.CTB; Page Setup Name: PDF-D-LANL; Institute 1; LTscale: 1.00000000 Measurement: 0;

5/12/14

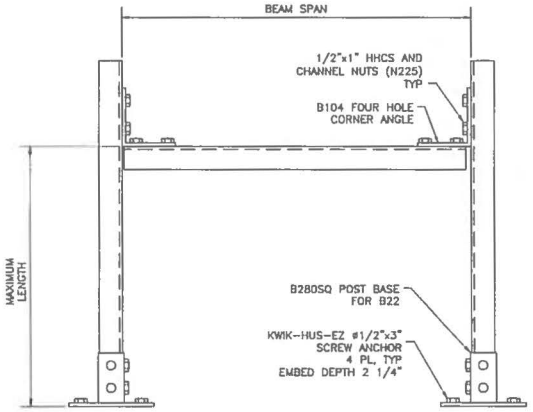

FRONT VIEW

1 FLOOR VERTICAL (FV) SUPPORT

3"=1'-0"

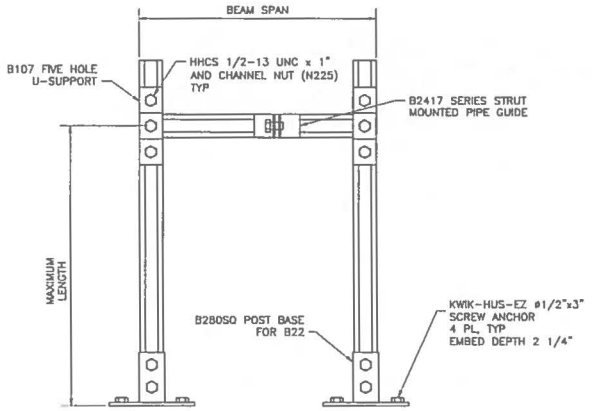

FRONT VIEW

2 FLOOR GUIDE SUPPORT

3"=1'-0"

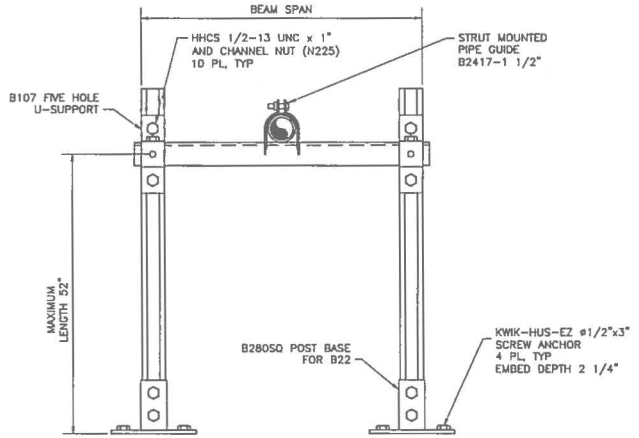

FRONT VIEW

3 FLOOR SUPPORT 1 (FS1)

3"=1'-0"

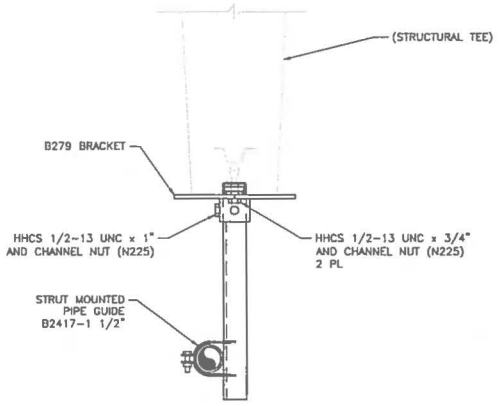

FRONT VIEW

4 CEILING SUPPORT 1 (CS1)

3"=1'-0"

GENERAL NOTES

1. IF THIS SHEET IS NOT 24"x 36", THEN IT IS A REDUCED SIZE PLOT. USE GRAPHIC SCALE ACCORDINGLY.
2. CHANNEL/STRUT PART NUMBERS ARE FOR B-LINE PRODUCTS. OTHER SUPPLIERS/MANUFACTURER'S PRODUCTS SHALL BE VERIFIED FOR STRUCTURAL ADEQUACY.
3. CHANNEL/STRUT FASTENERS SHALL BE SECURED PER MANUFACTURER'S RECOMMENDATIONS. OTHER FASTENERS SHALL BE TIGHTENED 3/4 TURN PAST FINGER TIGHT.
4. REFER TO ALLOWABLE CHANNEL LOADS TABLE, SEE SHEET D-5103.
5. IF SUPPORT IS INSTALLED OUTDOORS, PAINT ALL EXPOSED CARBON STEEL SURFACES PER SPECIFICATION.

KEYED NOTES

1. AT TIME OF PIPE INSTALLATION, PIPING PLAN VIEWS SHALL DENOTE LOCATION AND TYPE OF SUPPORT REQUIRED. REFERENCE CALLOUTS WILL BE COMPLETED AT THAT TIME.

NO	DATE	CLASS REV	ADC	DESCRIPTION	DWN	DES	CHKD	SUB	APP

AECOM

RLWTF-UP LOW LEVEL WASTE SUBPROJECT

PIPE SUPPORT DETAILS

BLDG. 230 TA-50

DRAWN	V DAVISON
DESIGN	R YOUNG
CHECKED	H MAI
DATE	5/8/14

SUBMITTED MANNY TARIN

APPROVED FOR RELEASE ED ARTIGLIA

Los Alamos NATIONAL LABORATORY PO Box 1663 Los Alamos, New Mexico 87545

SHEET D-5104

226 OF 434

CLASSIFICATION | REVIEWER | DATE

PROJECT ID 100761 | DRAWING NO C55864 | REV 0

File Location: P:\RLWTF LOW-LEVEL WASTE FACILITY\500 CAD\C55864 MAIN BUILDING\SHEETS\14 PROCESS\55864-D-5104-R0.DWG
Plotted By: MOORE, STEPHEN; Plot Date: Monday, May 05, 2014; Plot CTB File: LANL.CTB; Page Setup Name: PDF-D-LAN2; Inch/Dc: 1; LTScale: 1.0000 Measurement: 0;

: 12277

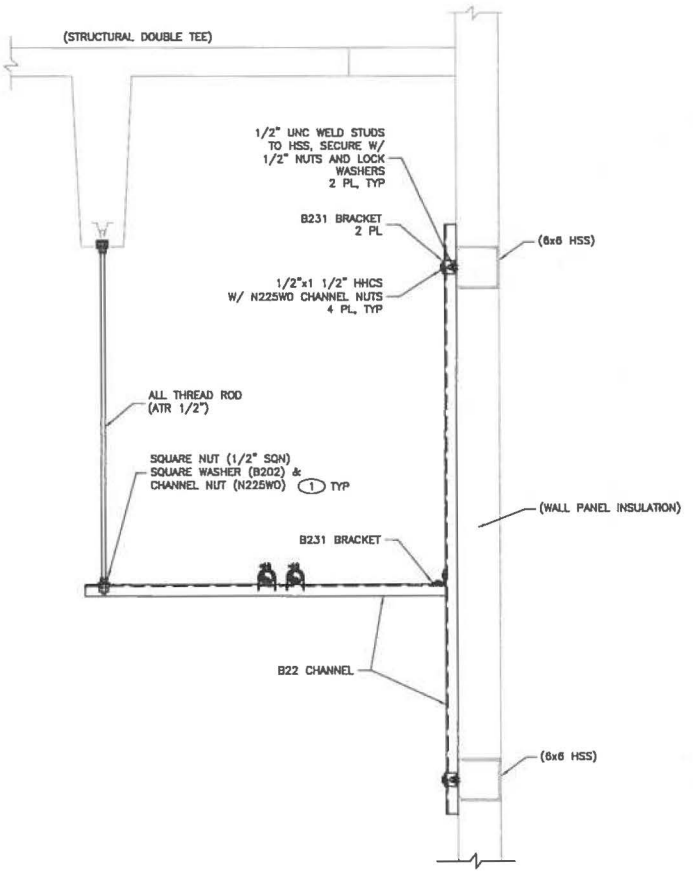

SIDE VIEW

(1) (2) TRAPEZE 1 (TZ1) SUPPORT DETAIL

4" 0 6" 1'
1 1/2"=1'-0"

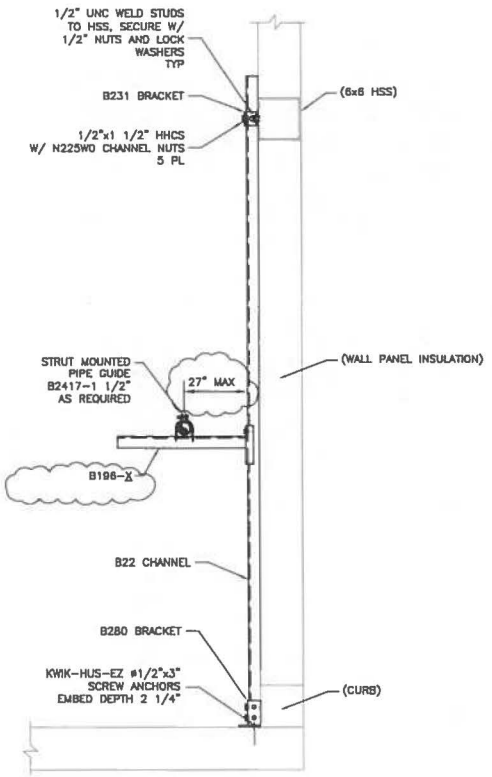

SIDE VIEW

(2) (2) WALL SUPPORT 1 DETAIL (WS1)

4" 0 6" 1'
1 1/2"=1'-0"

GENERAL NOTES

1. IF THIS SHEET IS NOT 24"x 36", THEN IT IS A REDUCED SIZE PLOT. USE GRAPHIC SCALE ACCORDINGLY.
2. CHANNEL/STRUT PART NUMBERS ARE FOR B-LINE PRODUCTS. OTHER SUPPLIERS/MANUFACTURER'S PRODUCTS SHALL BE VERIFIED FOR STRUCTURAL ADEQUACY.
3. FASTENERS SHALL BE SECURED PER MANUFACTURER'S RECOMMENDATIONS.
4. REFER TO SHEET D-5101 FOR PIPE CLAMP ALLOWABLE LOADS.

KEYED NOTES

(1) TIGHTEN SQUARE NUT TO SECURE CHANNEL COMPONENTS.

(2) AT TIME OF PIPE INSTALLATION, PIPING PLAN VIEWS SHALL DENOTE LOCATION AND TYPE OF SUPPORT REQUIRED. REFERENCE CALLOUTS WILL BE COMPLETED AT THAT TIME.

NO	DATE	CLASS REV	ADC	DESCRIPTION	DWN	DES	CHKD	SUB	APP
1	7/7/14	U		REVISED DETAIL	AG	MT	MT	MT	

AECOM

RLWTF-UP LOW LEVEL WASTE SUBPROJECT

PIPE SUPPORT DETAILS

DRAWN	V DAVISON
DESIGN	R YOUNG
CHECKED	H MAI
DATE	5/8/14

BLDG. 230 TA-50

SUBMITTED: MANNY TARIN

APPROVED FOR RELEASE: ED ARTIGLIA

7/7/2014

Los Alamos NATIONAL LABORATORY PO Box 1663 Los Alamos, New Mexico 87545

SHEET D-5105

227 OF 434

CLASSIFICATION	REVIEWER	DATE

PROJECT ID	DRAWING NO	REV
100761	C55864	1

122778

File: L:\wm\RLWTF LOW-LEVEL WASTE FACILITY\500 CAD\C55864 MAIN BUILDING\SHEETS\14 PROCESS\55864-D-5105-R1.DWG Plotted By: GALLEGOS, ALAN Plot Date: Thursday, July 03, 2014 Plot CS File: LANDSCAPE Page Setup Name: ---- Installed It: LTIndex: 1.0000 Measurement: ft

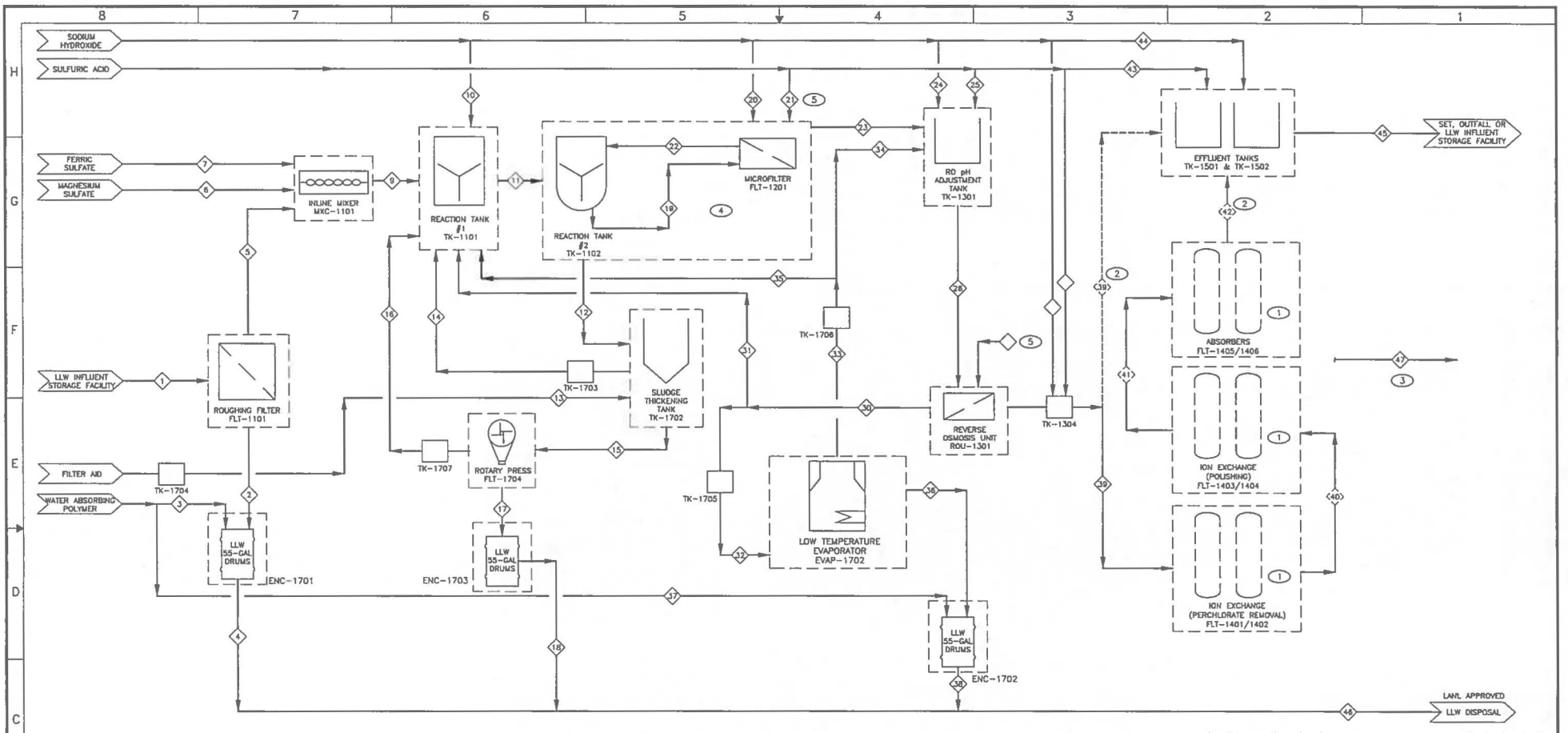

GENERAL NOTES

1. ☐ REPRESENTS A HOLDING TANK BETWEEN OPERATIONS.

KEYED NOTES

(1) ION EXCHANGE AND ABSORB UNITS ARE BROUGHT IN AS NEEDED TO TREAT FOR OUTFALL. ZLD DOES NOT REQUIRE THIS TREATMENT.

(2) IF ION EXCHANGE AND ABSORBERS NOT PRESENT, STREAM 39 = STREAM 42.

(3) STREAM 47 (ZONE F1) IS TOTAL COMPONENTS REMOVED BY IX AND ABSORBERS. WHEN IX AND ABSORBER ARE NOT USED, STREAM 47 HAS NOTHING IN IT.

(4) STREAM 19 AND STREAM 22 HAVE A LARGE VOLUMETRIC FLOW REQUIRED TO OPERATE THE MICROFILTER.

(5) CLEANING CHEMICALS AND pH ADJUSTMENT AS NEEDED.

NO	DATE	CLASS REV	ADC	DESCRIPTION	DWN	DES	CHKD	SUB	APP

AECOM

RLWTF-UP LOW LEVEL WASTE SUBPROJECT

PROCESS FLOW DIAGRAM

BLDG. 230 TA-50

DRAWN	V DAWSON
DESIGN	S MOORE
CHECKED	E ROGERS
DATE	5/8/14

SUBMITTED: MANNY TARIN

APPROVED FOR RELEASE: ED ARTIOLIA

Los Alamos NATIONAL LABORATORY PO Box 1663 Los Alamos, New Mexico 87545

SHEET D-6000

228 OF 434

CLASSIFICATION | REVIEWER | DATE

PROJECT ID 100761 | DRAWING NO C55864 | REV 0

M. EVELYN ROGERS NEW MEXICO 22184 PROFESSIONAL ENGINEER 5/15/14

122279

STREAM NUMBER		1	2	3	4	5	6	7	9	10
STREAM NAME	UNITS	INFLUENT FROM LLW INFLUENT STORAGE FACILITY	ROUGHING FILTER SOLIDS TO 55-GALLON DRUMS	WATER ABSORBING POLYMER TO ROUGHING FILTER 55-GALLON DRUMS	55-GALLON DRUMS TO LANL-APPROVED LLW DISPOSAL	ROUGHING FILTERS TO INLINE MIXER	MAGNESIUM SULFATE (25 WT%) TO INLINE MIXER	FERRIC SULFATE (38 WT%) TO INLINE MIXER	REACTION TANK #1 FEED	NaOH (25 WT%) TO REACTION TANK #1
VOLUME THROUGHPUT	L/yr	5,000,000	787	32	787	4,999,441	2,321	1,029	5,003,157	2,937
VOLUME FLOWRATE	gal/min	25.3	na	na	na	25.3	0.012	0.0052	25.3	0.015
DRY SOLIDS	wt%	1.04%	50%	100%	50.98%	1.04%	25.00%	38.00%	1.07%	25.00%
pH		8.2	8.2	0.0	0.0	8.2	8.5 to 8.5	1 to 2	8.6	15.6
AMMONIA-NITROGEN (NH3-N)	mg/L	5.00E+00	0	0	0	5.00E+00	0	0	5.00E+00	0
CADMIUM (Cd)	mg/L	1.00E+00	0	0	0	1.00E+00	0	0	9.99E-01	0
CHEMICAL OXYGEN DEMAND (COD)	mg/L	2.50E+02	0	0	0	2.50E+02	0	0	2.50E+02	0
CHLORIDE (Cl)	mg/L	3.00E+01	0	0	0	3.00E+01	0.00E+00	0.00E+00	3.00E+01	0
FLUORIDE (F)	mg/L	1.00E+01	0	0	0	1.00E+01	0	0	9.99E+00	0
NITRATE-NITROGEN (NO3 -N)	mg/L	7.00E+01	0	0	0	7.00E+01	0	0	7.00E+01	0
NITRITE-NITROGEN (NO2 -N)	mg/L	1.06E+00	0	0	0	1.06E+00	0	0	1.06E+00	0
PERCHLORATE (ClO4-)	mg/L	1.00E+00	0	0	0	1.00E+00	0	0	9.99E-01	0
SILICON DIOXIDE (SiO2)	mg/L	8.56E+01	0	0	0	8.56E+01	0	0	8.55E+01	0
SODIUM (Na)	mg/L	1.00E+02	0	0	0	1.00E+02	0	0	9.99E+01	1.84E+05
SULFATE (SO4)	mg/L	5.70E+01	0	0	0	5.70E+01	2.55E+05	3.76E+05	2.53E+02	0
TOTAL SUSPENDED SOLIDS (TSS)	mg/L	1.00E+04	7.08E+05	7.00E+05	7.34E+05	1.00E+04	0	0	9.99E+03	0
TOTAL DISSOLVED SOLIDS (TDS)	mg/L	4.78E+02	0	0	0	4.78E+02	3.20E+05	5.22E+05	7.33E+02	3.20E+05
GROSS ALPHA	nCi/L	5.00E+02	0	0	0	5.00E+02	0	0	5.00E+02	0
TRITIUM (H-3)	nCi/L	2.00E+01	0	0	0	2.00E+01	0	0	2.00E+01	0
NUMBER OF DRUMS					4					

STREAM NUMBER		11	12	13	14	15	16	17	18
STREAM NAME	UNITS	REACTION TANK #2 FEED	REACTION TANK SLUDGE TO THICKENING TANK	FILTER AID	SLUDGE THICKENING TANK DECANT TO REACTION TANK #1	ROTARY PRESS FEED FROM SLUDGE THICKENING TANK	ROTARY PRESS FILTRATE TO REACTION TANK #1	ROTARY PRESS CAKE TO 55-GALLON DRUMS	ROTARY PRESS LLW 55-GALLON DRUMS TO LANL-APPROVED LLW DISPOSAL
VOLUME THROUGHPUT	L/yr	7,285,646	994,995	175,481	589,466	581,010	347,822	233,187	233,187
VOLUME FLOWRATE	gal/min	36.8	5.0	0.89	3.0	2.9	1.8	1.2	1.2
DRY SOLIDS	wt%	1.08%	5.38%	25.00%	0.34%	16.29%	0.34%	35.22%	35.22%
pH		10.8	10.8	7.0	10.8	10.8	10.8	10.8	10.8
AMMONIA-NITROGEN (NH3-N)	mg/L	2.05E+01	2.54E+01	0.00E+00	2.24E+01	2.08E+01	2.24E+01	1.83E+01	1.83E+01
CADMIUM (Cd)	mg/L	7.35E-01	4.94E+00	0.00E+00	0.00E+00	8.45E+00	0.00E+00	2.11E+01	2.11E+01
CHEMICAL OXYGEN DEMAND (COD)	mg/L	9.27E+02	5.72E+03	0.00E+00	5.05E+03	4.67E+03	5.05E+03	4.12E+03	4.12E+03
CHLORIDE (Cl)	mg/L	1.05E+02	1.36E+02	0.00E+00	1.20E+02	1.11E+02	1.20E+02	9.81E+01	9.81E+01
FLUORIDE (F)	mg/L	3.12E+01	3.98E+01	0.00E+00	3.50E+01	3.24E+01	3.49E+01	2.85E+01	2.85E+01
NITRATE-NITROGEN (NO3 -N)	mg/L	2.05E+02	2.00E+02	0.00E+00	1.77E+02	1.63E+02	1.78E+02	1.44E+02	1.44E+02
NITRITE-NITROGEN (NO2 -N)	mg/L	2.61E+00	2.55E+00	0.00E+00	2.25E+00	2.08E+00	2.25E+00	1.84E+00	1.84E+00
PERCHLORATE (ClO4-)	mg/L	2.97E+00	2.91E+00	0.00E+00	2.57E+00	2.37E+00	2.56E+00	2.09E+00	2.09E+00
SILICON DIOXIDE (SiO2)	mg/L	8.47E+01	4.16E+02	0.00E+00	0.00E+00	7.13E+02	0.00E+00	1.78E+03	1.78E+03
SODIUM (Na)	mg/L	8.97E+02	1.22E+03	0.00E+00	1.08E+03	9.99E+02	1.08E+03	8.80E+02	8.80E+02
SULFATE (SO4)	mg/L	2.65E+03	3.54E+03	0.00E+00	3.13E+03	2.89E+03	3.12E+03	2.55E+03	2.55E+03
TOTAL SUSPENDED SOLIDS (TSS)	mg/L	7.07E+03	5.16E+04	2.93E+05	0.00E+00	1.77E+05	0.00E+00	4.41E+05	4.41E+05
TOTAL DISSOLVED SOLIDS (TDS)	mg/L	3.85E+03	3.88E+03	0.00E+00	3.43E+03	3.17E+03	3.42E+03	2.79E+03	2.79E+03
GROSS ALPHA	nCi/L	3.48E+02	2.54E+03	0.00E+00	0.00E+00	4.35E+03	7.26E+01	1.07E+04	1.07E+04
TRITIUM (H-3)	nCi/L	5.75E+01	3.22E+02	0.00E+00	3.30E+02	2.18E+02	2.35E+02	1.92E+02	1.92E+02
NUMBER OF DRUMS									1185.8

NO	DATE	CLASS REV	ADC	DESCRIPTION	DWN	DES	CHKD	SUB	APP

AECOM

RLWTF-UP LOW LEVEL WASTE SUBPROJECT

PROCESS STREAM TABLES

BLDG. 230 TA-50

SUBMITTED MANNY TARIN

APPROVED FOR RELEASE ED ARTIGLIA

Los Alamos NATIONAL LABORATORY PO Box 1663 Los Alamos, New Mexico 87545

DRAWN	V DAVISON
DESIGN	S MOORE
CHECKED	E ROGERS
DATE	3/6/14
SHEET	D-6001
	229 OF 434

CLASSIFICATION | REVIEWER | DATE

PROJECT ID 100761 | DRAWING NO C55864 | REV 0

M. EVELYN ROGERS NEW MEXICO 22184 PROFESSIONAL ENGINEER 3/5/14

File Location: P:\RLWTF LOW-LEVEL WASTE FACILITY\300 CAD\C55864 MAIN BUILDING\SHEETS\14 PROCESS\55864-D-6001-R0.DWG
Pulled By: MOORE, STEPHEN Pad Date: Monday, May 05, 2014

122289

STREAM NUMBER		19	20	21	22	23	24	25
STREAM NAME	UNITS	MICROFILTER FEED FROM REACTION TANK #2	NaOH (5 WT%) TO MICROFILTER CLEANING	H2SO4 (5 WT%) TO MICROFILTER CLEANING	MICROFILTER CONCENTRATE TO REACTION TANK #2	MICROFILTER PERMEATE TO PH ADJUSTMENT TANK	NaOH (25 WT%) ADDITION TO PH ADJUSTMENT TANK	H2SO4 (93 WT%) ADDITION TO PH ADJUSTMENT TANK
VOLUME THROUGHPUT	L/yr	62,928,121	10,901	10,901	56,635,309	6,292,812	0	1,633
VOLUME FLOWRATE	gal/min	318.5	na	na	286.8	31.8	na	0.008
DRY SOLIDS	wt%	0.43%	2.87%	4.90%	0.43%	0.40%	0.00%	91.11%
pH		10.8	14.0	−0.1	10.8	10.8	15.6	N/A
AMMONIA−NITROGEN (NH3−N)	mg/L	1.97E+01	0	0	1.97E+01	1.97E+01	0	0
CADMIUM (Cd)	mg/L	1.16E−01	0	0	1.22E−01	6.78E−02	0	0
CHEMICAL OXYGEN DEMAND (COD)	mg/L	1.88E+02	0	0	1.91E+02	1.65E+02	0	0
CHLORIDE (Cl)	mg/L	1.20E+02	0	0.00E+00	1.22E+02	9.97E+01	0	0.00E+00
FLUORIDE (F)	mg/L	3.07E+01	0	0	3.08E+01	2.98E+01	0	0
NITRATE−NITROGEN (NO3 −N)	mg/L	2.05E+02	0	0	2.05E+02	2.05E+02	0	0
NITRITE−NITROGEN (NO2 −N)	mg/L	2.61E+00	0	0	2.61E+00	2.61E+00	0	0
PERCHLORATE (ClO4−)	mg/L	2.97E+00	0	0	2.97E+00	2.97E+00	0	0
SILICON DIOXIDE (SiO2)	mg/L	1.01E+00	0	0	1.31E−01	8.91E+00	0	0
SODIUM (Na)	mg/L	8.94E+02	3.02E+04	0	8.94E+02	8.95E+02	0	0
SULFATE (SO4)	mg/L	3.09E+03	0	5.05E+04	3.15E+03	2.58E+03	0	1.67E+06
TOTAL SUSPENDED SOLIDS (TSS)	mg/L	3.52E+02	0	0	3.91E+02	0.00E+00	0	0
TOTAL DISSOLVED SOLIDS (TDS)	mg/L	3.97E+03	3.02E+04	5.05E+04	3.97E+03	3.97E+03	0	1.67E+06
GROSS ALPHA	nCi/L	4.05E−01	0	0	4.46E−01	4.05E−02	0	0
TRITIUM (H−3)	nCi/L	1.71E+01	0	0	1.73E+01	1.54E+01	0	0
NUMBER OF DRUMS								

STREAM NUMBER		26	30	31	32	33
STREAM NAME	UNITS	REVERSE OSMOSIS FEED FROM PH ADJUSTMENT TANK	REVERSE OSMOSIS CONCENTRATE	RO CONCENTRATE RECYCLED TO REACTION TANK #1	RO CONCENTRATE TO LOW TEMP EVAPORATOR	LOW TEMPERATURE EVAPORATOR CONDENSATE
VOLUME THROUGHPUT	L/yr	6,609,943	1,652,486	1,321,989	330,497	315,731
VOLUME FLOWRATE	gal/min	33.5	8.4	6.7	1.7	1.6
DRY SOLIDS	wt%	0.42%	1.61%	1.61%	1.61%	0.00%
pH		7.5	7.7	7.7	7.7	8.2
AMMONIA−NITROGEN (NH3−N)	mg/L	2.23E+01	7.80E+01	7.80E+01	7.80E+01	7.35E+01
CADMIUM (Cd)	mg/L	6.46E−02	2.56E−01	2.56E−01	2.56E−01	2.68E−04
CHEMICAL OXYGEN DEMAND (COD)	mg/L	1.57E+02	5.68E+02	5.68E+02	5.68E+02	7.43E−05
CHLORIDE (Cl)	mg/L	9.50E+01	3.79E+02	3.79E+02	3.79E+02	7.64E−01
FLUORIDE (F)	mg/L	2.83E+01	1.09E+02	1.09E+02	1.09E+02	4.77E−03
NITRATE−NITROGEN (NO3 −N)	mg/L	1.95E+02	7.34E+02	7.34E+02	7.34E+02	1.35E+00
NITRITE−NITROGEN (NO2 −N)	mg/L	2.48E+00	8.73E+00	8.73E+00	8.73E+00	3.82E−03
PERCHLORATE (ClO4−)	mg/L	2.83E+00	1.07E+01	1.07E+01	1.07E+01	1.40E−06
SILICON DIOXIDE (SiO2)	mg/L	8.49E+00	3.22E+01	3.22E+01	3.22E+01	3.38E−02
SODIUM (Na)	mg/L	8.52E+02	3.38E+03	3.38E+03	3.38E+03	1.18E−01
SULFATE (SO4)	mg/L	2.88E+03	1.14E+04	1.14E+04	1.14E+04	8.57E+00
TOTAL SUSPENDED SOLIDS (TSS)	mg/L	0.00E+00	0.00E+00	0.00E+00	0.00E+00	0.00E+00
TOTAL DISSOLVED SOLIDS (TDS)	mg/L	4.19E+03	1.62E+04	1.62E+04	1.62E+04	2.13E−03
GROSS ALPHA	nCi/L	3.86E−02	1.36E−01	1.36E−01	1.36E−01	1.78E−08
TRITIUM (H−3)	nCi/L	1.82E+01	3.16E+01	3.16E+01	3.16E+01	3.19E+01
NUMBER OF DRUMS						

NO	DATE	CLASS REV	ADC	DESCRIPTION	DWN	DES	CHKD	SUB	APP

AECOM

RLWTF−UP LOW LEVEL WASTE SUBPROJECT

PROCESS STREAM TABLES

DRAWN: V DAVISON

DESIGN: S MOORE

CHECKED: E ROGERS

DATE: 5/8/14

BLDG. 230 TA−50

SUBMITTED: MANNY TARIN

APPROVED FOR RELEASE: ED ARTIGLIA

Los Alamos NATIONAL LABORATORY PO Box 1663 Los Alamos, New Mexico 87545

SHEET: D−6002

230 OF 434

CLASSIFICATION | REVIEWER | DATE

PROJECT ID: 100761

DRAWING NO: C55864

REV: 0

M. EVELYN ROGERS NEW MEXICO 22184 PROFESSIONAL ENGINEER

5/15/14

File Location: P:\RLWTF LOW-LEVEL WASTE FACILITY\500 CAD\C55864 MAIN BUILDING\SHEETS\14 PROCESS\55864-D-6002-R0.DWG
Plotted By: MOORE, STEPHEN Plot Date: Monday, May 05, 2014

18281

STREAM NUMBER		34	35	36	37	38	39	40
STREAM NAME	UNITS	LOW TEMPERATURE EVAPORATOR CONDENSATE RECYCLED TO RO PH ADJUSTMENT TANKS	LOW TEMPERATURE EVAPORATOR CONDENSATE RECYCLE TO REACTION TANK #1	LOW TEMPERATURE EVAPORATOR CONCENTRATE TO 55-GALLON DRUMS	WATER ABSORBING POLYMER	LOW TEMPERATURE EVAPORATOR CONCENTRATE TO LANL-APPROVED LLW DISPOSAL	REVERSE OSMOSIS PERMEATE TO ION EXCHANGE (PERCHLORATE)	FEED TO ION EXCHANGE (POLISHING)
VOLUME THROUGHPUT	L/yr	315,731	0	14,787	1,534	14,787	4,957,457	4,957,458
VOLUME FLOWRATE	gal/min	1.6	0.00	0.07	na	na	25.1	25.1
DRY SOLIDS	wt%	0.00%	0.00%	30.00%	100.00%	33.96%	0.02%	0.02%
pH		8.2	8.2	9.8	0.0	9.8	6.50	6.50
AMMONIA-NITROGEN (NH3-N)	mg/L	7.35E+01	7.35E+01	1.75E+02	0	1.75E+02	3.66E+00	3.66E+00
CADMIUM (Cd)	mg/L	2.68E-04	2.68E-04	5.72E+00	0	5.72E+00	8.99E-04	8.99E-04
CHEMICAL OXYGEN DEMAND (COD)	mg/L	7.43E-05	7.43E-05	1.27E+04	0	1.27E+04	2.05E+01	2.05E+01
CHLORIDE (Cl)	mg/L	7.64E-01	7.64E-01	8.46E+03	0	8.46E+03	4.56E-01	4.56E-01
FLUORIDE (F)	mg/L	4.77E-03	4.77E-03	2.44E+03	0	2.44E+03	1.48E+00	1.48E+00
NITRATE-NITROGEN (NO3 -N)	mg/L	1.35E+00	1.35E+00	1.64E+04	0	1.64E+04	1.50E+01	1.50E+01
NITRITE-NITROGEN (NO2 -N)	mg/L	3.82E-03	3.82E-03	1.95E+02	0	1.95E+02	4.01E-01	4.01E-01
PERCHLORATE (ClO4-)	mg/L	1.40E-06	1.40E-06	2.40E+02	0	2.40E+02	1.95E-01	0.00E+00
SILICON DIOXIDE (SiO2)	mg/L	3.38E-02	3.38E-02	7.20E+02	0	7.20E+02	5.90E-01	5.90E-01
SODIUM (Na)	mg/L	1.18E-01	1.18E-01	7.56E+04	0	7.56E+04	9.59E+00	9.59E+00
SULFATE (SO4)	mg/L	8.57E+00	8.57E+00	2.55E+05	0	2.55E+05	3.48E+01	3.48E+01
TOTAL SUSPENDED SOLIDS (TSS)	mg/L	0.00E+00	0	0.00E+00	7.00E+05	7.27E+04	0.00E+00	0.00E+00
TOTAL DISSOLVED SOLIDS (TDS)	mg/L	2.13E-03	2.13E-03	3.64E+05	0	3.64E+05	1.67E+02	1.67E+02
GROSS ALPHA	nCi/L	1.78E-08	1.78E-08	3.05E+00	0	3.05E+00	6.05E-03	6.05E-03
TRITIUM (H-3)	nCi/L	3.19E+01	3.19E+01	2.70E+01	0	2.70E+01	1.11E+01	1.11E+01
NUMBER OF DRUMS						75.1		

STREAM NUMBER		41	42	43	44	45	46
STREAM NAME	UNITS	FEED TO ORGANIC ADSORBER	ADSORBER EFFLUENT TO EFFLUENT TANKS	SULFURIC ACID (93 WT%) ADDITION TO EFFLUENT TANKS	SODIUM HYDROXIDE (25 WT%) ADDITION TO EFFLUENT TANKS	DISCHARGE TO SET, OUTFALL OR LLW INFLUENT STORAGE FACILITY	TOTAL 55-GALLON DRUMS TO LANL-APPROVED LLW DISPOSAL FACILITY
VOLUME THROUGHPUT	L/yr	4,957,458	4,957,529	0	0	4,957,529	248,741
VOLUME FLOWRATE	gal/min	25.1	25.1	0.0	0.0	25.1	na
DRY SOLIDS	wt%	0.02%	0.01%	0.00%	0.00%	0.01%	35.20%
pH		6.50	6.50	N/A	15.60	6.50	0.0
AMMONIA-NITROGEN (NH3-N)	mg/L	3.66E+00	3.66E+00	0	0	3.66E+00	2.75E+01
CADMIUM (Cd)	mg/L	8.99E-04	8.99E-04	0	0	8.99E-04	2.01E+01
CHEMICAL OXYGEN DEMAND (COD)	mg/L	2.05E+01	2.05E+00	0	0	2.05E+00	4.62E+03
CHLORIDE (Cl)	mg/L	4.56E-01	4.58E-01	0	0	4.56E-01	5.94E+02
FLUORIDE (F)	mg/L	1.48E+00	1.48E+00	0	0	1.48E+00	1.71E+02
NITRATE-NITROGEN (NO3 -N)	mg/L	1.50E+01	1.50E+01	0	0	1.50E+01	1.11E+03
NITRITE-NITROGEN (NO2 -N)	mg/L	4.01E-01	4.01E-01	0	0	4.01E-01	1.33E+01
PERCHLORATE (ClO4-)	mg/L	0.00E+00	0.00E+00	0	0	0.00E+00	1.62E+01
SILICON DIOXIDE (SiO2)	mg/L	5.90E-01	5.90E-01	0	0	5.90E-01	1.71E+03
SODIUM (Na)	mg/L	9.59E+00	9.59E+00	0	0	9.59E+00	5.31E+03
SULFATE (SO4)	mg/L	3.48E+01	3.48E+01	0	0	3.48E+01	1.75E+04
TOTAL SUSPENDED SOLIDS (TSS)	mg/L	0.00E+00	0.00E+00	0	0	0.00E+00	4.20E+05
TOTAL DISSOLVED SOLIDS (TDS)	mg/L	1.67E+02	1.43E+02	0	0	1.43E+02	2.42E+04
GROSS ALPHA	nCi/L	6.05E-03	6.05E-03	0	0	6.05E-03	1.01E+04
TRITIUM (H-3)	nCi/L	1.11E+01	1.11E+01	0	0	1.11E+01	1.82E+02
NUMBER OF DRUMS							1,284.9

NO	DATE	CLASS REV	ADC	DESCRIPTION	DWN	DES	CHKD	SUB	APP

AECOM

RLWTF-UP LOW LEVEL WASTE SUBPROJECT

PROCESS STREAM TABLES

BLDG. 230 TA-50

SUBMITTED MANNY TARIN

APPROVED FOR RELEASE ED ARTIGLIA

DRAWN V DAVISON

DESIGN S MOORE

CHECKED E ROGERS

DATE 5/6/14

Los Alamos NATIONAL LABORATORY PO Box 1663 Los Alamos, New Mexico 87545

SHEET D-6003

231 OF 434

CLASSIFICATION REVIEWER DATE

PROJECT ID 100761

DRAWING NO C55864

REV 0

M. EVELYN ROGERS NEW MEXICO 22184 PROFESSIONAL ENGINEER

5/6/14

File Location: P:\RLWTF LOW-LEVEL WASTE FACILITY\000 CAD\C55864 MAIN BUILDING\SHEETS\14 PROCESS\55864-D-6003-R0.DWG
Plotted By: MOORE, STEPHEN Plot Date: Monday, May 05, 2014

A22282

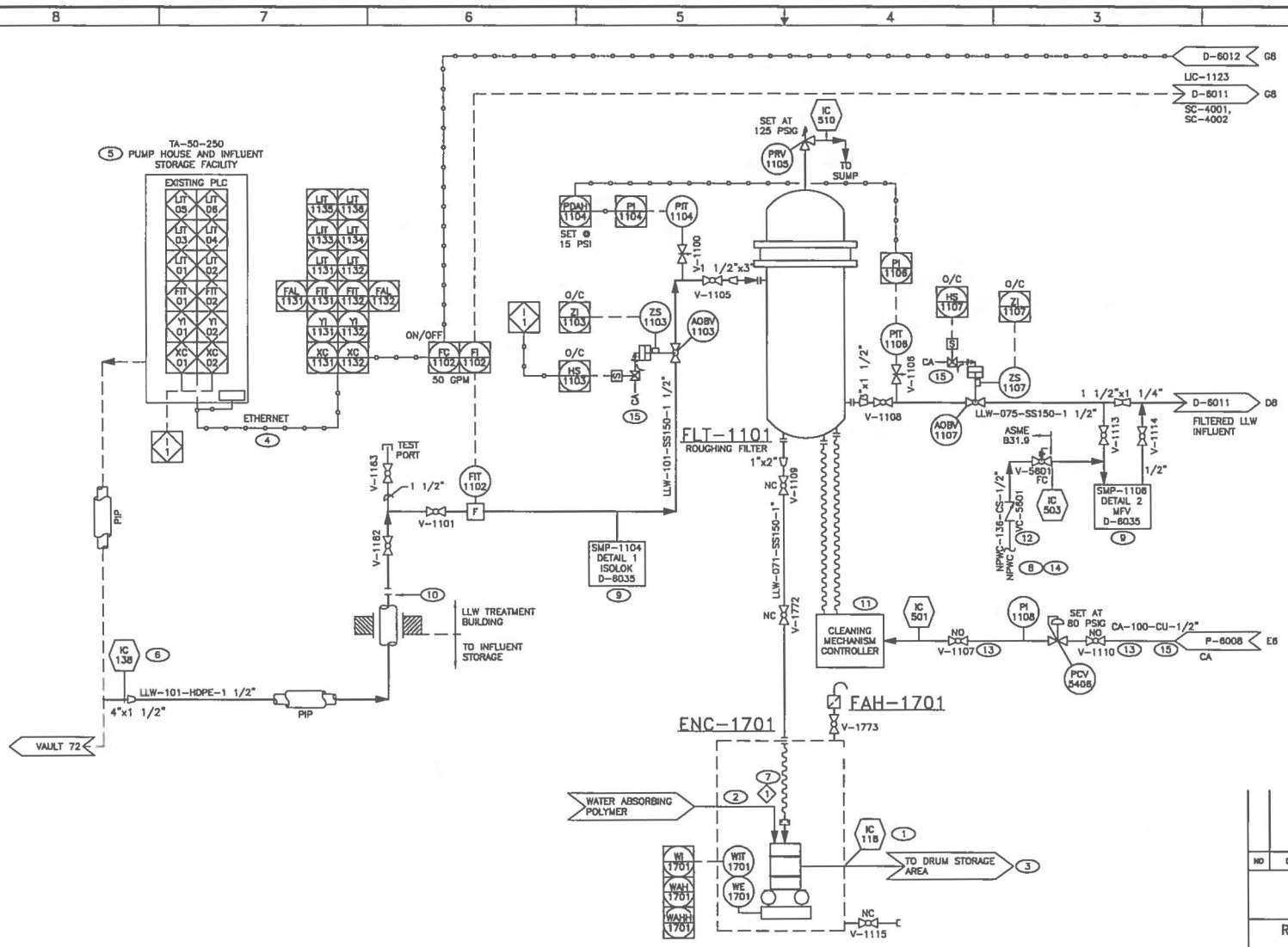

GENERAL NOTES

1. SEE P-6008 FOR COMPRESSED AIR DISTRIBUTION P&ID TO AOBV'S.
2. ALL VALVES PREFIXED WITH "INF-1101-" UNLESS OTHERWISE NOTED.
3. ALL PIPING SHALL BE IN ACCORDANCE WITH ASME B31.3 NORMAL FLUID SERVICE UNLESS OTHERWISE NOTED.

INTERLOCKS

1. SOFTWARE PROCESS INTERLOCK ON LAHH-1123 (SEE SHEET D-6012) CLOSES VALVES AOBV-1103, STOPS PUMPS P-01, P-02 LOCATED AT TA-50-250.

KEYED NOTES

1. ENCLOSURE EQUIPPED WITH DOOR AND ACCESS PORTS.
2. WATER ABSORBING POLYMER ADDED TO DRUM ADDITION PER PROCEDURE BEFORE ADDITION OF WASTE.
3. DRUMS PLACED IN DRUM STORAGE AREA PRIOR TO FINAL DISPOSITION.
4. COMMUNICATES WITH THE INFLUENT STORAGE FACILITY (TA-50-250).
5. SEE WWRM PROJECT C53029 DRAWING SET FOR FACILITY DETAILS.
6. TRANSITION FROM EXISTING HDPE PIPE-IN-PIPE AT IC 138. NEW HDPE PIPE-IN-PIPE ENTRY TO BUILDING IS THROUGH FLOOR PENETRATION. SECONDARY DRAINS TO INFLUENT STORAGE FACILITY.
7. SEE FLEX HOSE SCHEDULE FOR ASSIGNED NUMBER AND INTERFACING LINE.

FLEX HOSE IDENTIFIER
1 LLW-071-FH-01

8. SEE P-6009 FOR NON-POTABLE WATER P&ID.
9. ALL SAMPLERS HAVE COMPRESSED AIR SUPPLY. SEE D-6035 DIAGRAM 1 OR DIAGRAM 2.
10. TRANSITION FROM HDPE PIPE-IN-PIPE TO SS. SECONDARY IS CAPPED WITH ASAHI DOG BONE TO PREVENT INTRODUCTION OF LIQUIDS.
11. CLEANING SYSTEM CONTROLLER AND AIR HOSES PROVIDED BY FILTER VENDOR. CONTROLLER OPERATES THE MAGNETIC COUPLED CLEANING DISC.
12. VALVE PREFIXED WITH "NPWC-1101-".
13. VALVES PREFIXED WITH "CA-1101-".
14. NPWC PIPING SHALL BE IN ACCORDANCE WITH ASME B31.9.
15. CA PIPING SHALL BE IN ACCORDANCE WITH ASME B31.3.

"PRIORITY DRAWING"

NO	DATE	CLASS REV	ADC	DESCRIPTION	DRW	DES	CHKD	SUB	APP

AECOM

RLWTF-UP LOW LEVEL WASTE SUBPROJECT

INFLUENT FILTER SYSTEM
ROUGHING FILTERS P&ID

BLDG. 230 TA-50

DRAWN	V DAWSON
DESIGN	S MOORE
CHECKED	E ROGERS
DATE	8/8/14

SUBMITTED MANNY TARIN

APPROVED FOR RELEASE ED ARTIGLIA

Los Alamos NATIONAL LABORATORY PO Box 1663 Los Alamos, New Mexico 87545

SHEET D-6010
232 OF 434

CLASSIFICATION	REVISION	DATE

PROJECT ID	DRAWING NO	REV
100761	C55864	0

M. EVELYN ROGERS NEW MEXICO 12184 REGISTERED PROFESSIONAL ENGINEER

8/8/14

E8227 :
File Location: P:_TECHNOLOGY\EC55931 - RLWTF\ADD STUDIES\ DESIGN\AD DESIGN SUBMISSION\01 CONCEPT DESIGN\DELIS_8-14-14 FINAL\DELIS DRAWINGS\25k\LLW TREATMENT BUILDING\CAD FILES\2D\PROCESS\55864-D-6010-R0.DWG
Plotted By: BROOKMAN, DARLENE Plot Date: Thursday, May 15, 2014

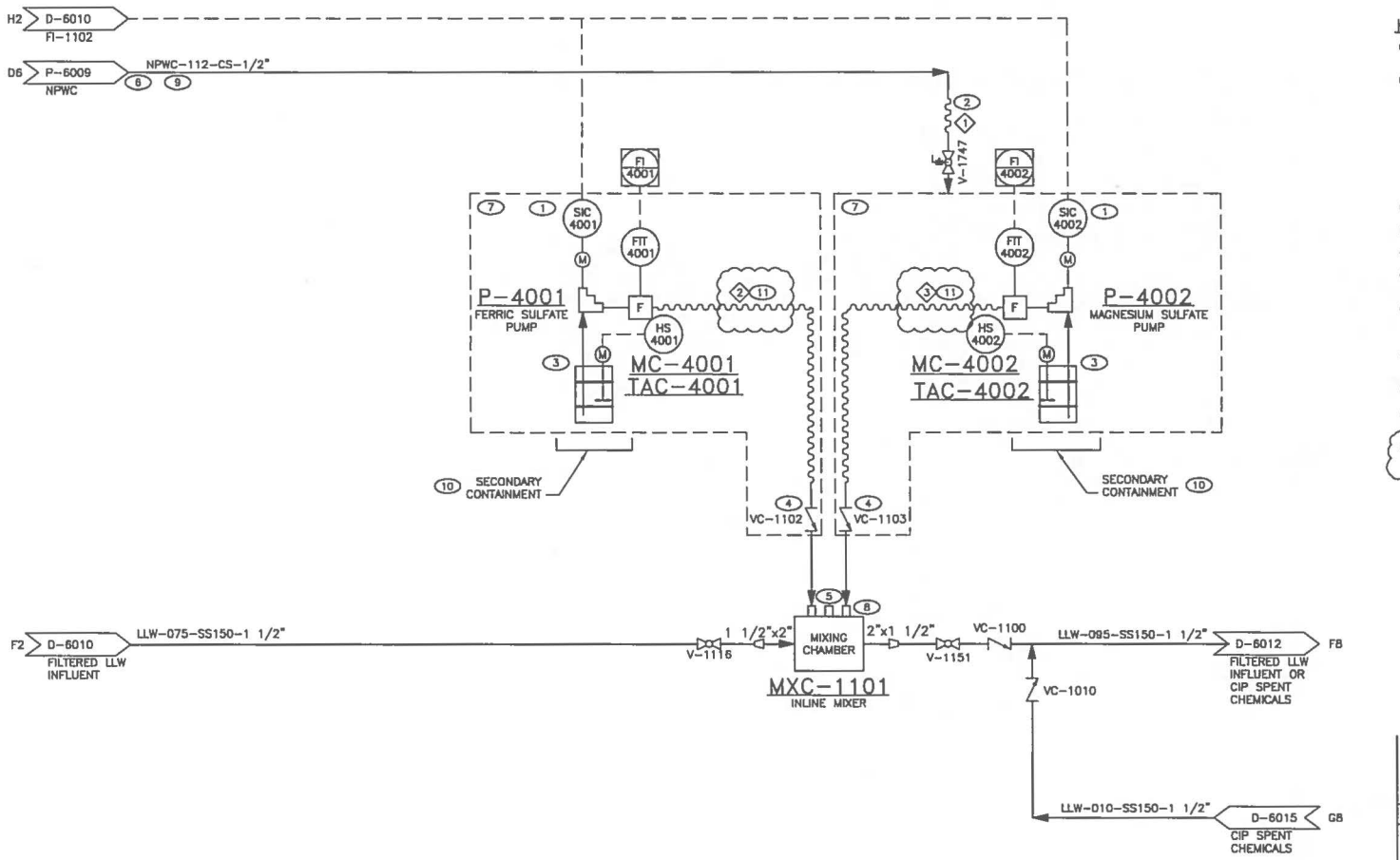

GENERAL NOTES

1. ALL VALVES PREFIXED WITH "RX-1101-" UNLESS OTHERWISE NOTED.
2. ALL PIPING SHALL BE IN ACCORDANCE WITH ASME B31.3 NORMAL FLUID SERVICE UNLESS OTHERWISE NOTED.

KEYED NOTES

(1) METERING PUMP SPEED IS CONTROLLED FROM FI-1102. DOSING IS PROPORTIONAL TO THE VOLUME THROUGH FLT-1101.

(2) SEE FLEX HOSE SCHEDULE FOR ASSIGNED NUMBER AND INTERFACING LINE.

FLEX HOSE IDENTIFIER	
1	NPWC-112-FH-01
2	CS-401-FH-01
3	CS-402-FH-01

(3) SEE D-6035 DIAGRAM 3 FOR METERING PUMP/TAC ASSEMBLY.

(4) VALVES PREFIXED WITH "CS-1101-".

(5) SPARE THREADOLET FOR FUTURE CAUSTIC ADDITION.

(6) NPWC EQUIPPED WITH FLEX HOSE AND SELF-CLOSING MANUAL VALVE FOR PREPARING MGSO4 SOLUTIONS.

(7) METERING PUMP VENDOR PROVIDES EVERYTHING WITHIN BOUNDARY, INCLUDING 3/8" FLEXIBLE DISCHARGE TUBING, CHECK VALVE AND INJECTION QUILL.

(8) INJECTION QUILLS SCREW INTO THREADOLETS ON MIXING CHAMBER.

(9) NPWC PIPING SHALL BE IN ACCORDANCE WITH ASME B31.9.

(10) SECONDARY CONTAINMENT FOR TAC-4001 AND TAC-4002 SEPARATE. USE ULTRATECH MODEL 1147 OR EQUAL FOR EACH.

(11) PIPING SHALL BE IN ACCORDANCE WITH ASME B31.3 FLUID SERVICE CATEGORY D.

"PRIORITY DRAWING"

NO	DATE	CLASS REV	ADC	DESCRIPTION	DRN	DES	CHKD	SUB	APP
1	7/7/14	U		ADDED NOTE					

AECOM

RLWTF-UP LOW LEVEL WASTE SUBPROJECT

REACTION/PRECIPITATION SYSTEM MIXING CHAMBER P&ID

DRAWN	V DAVISON
DESIGN	S MOORE
CHECKED	E ROGERS
DATE	8/8/14

BLDG. 230 TA-50

SUBMITTED: MANNY TARIN

APPROVED FOR RELEASE: ED ARTIGLIA

Los Alamos NATIONAL LABORATORY PO Box 1663 Los Alamos, New Mexico 87545

SHEET D-6011

233 OF 434

CLASSIFICATION | REVIEWER | DATE

PROJECT ID 100761 | DRAWING NO C55864 | REV 1

M. EVELYN BOOTH NEW MEXICO 22184 PROFESSIONAL ENGINEER

n8221 :

File Location: W:\RLWTF LOW-LEVEL WASTE FACILITY\00 CAD\C55864 MAIN BUILDING\SHEETS\1 PROCESS\55864-D-6011.DWG

Plotted By: BRIZZARD, DARLENE Plot Date: Wednesday, July 02, 2014

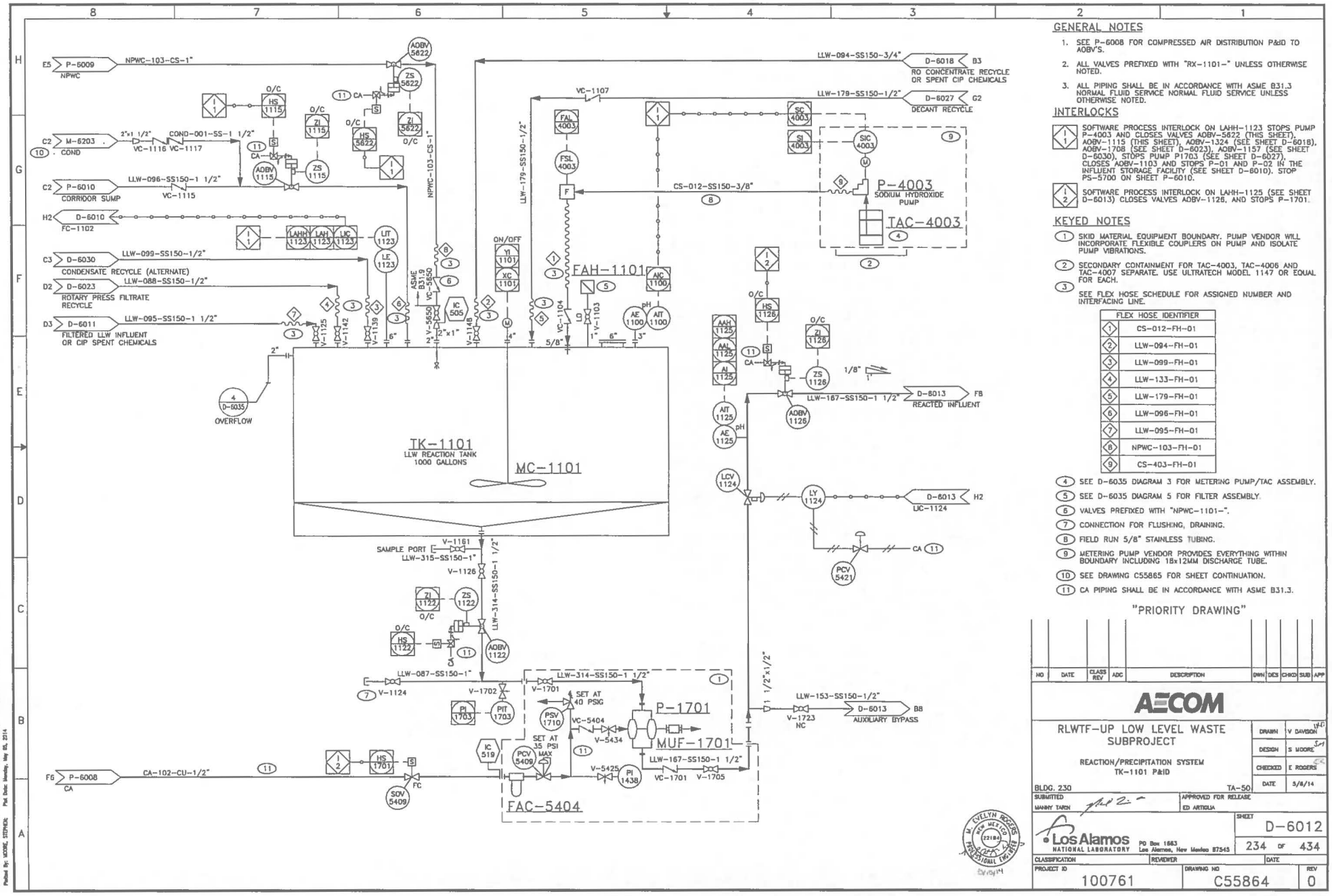

GENERAL NOTES

1. SEE P-6008 FOR COMPRESSED AIR DISTRIBUTION P&ID TO AOBV'S.
2. ALL VALVES PREFIXED WITH "RX-1101-" UNLESS OTHERWISE NOTED.
3. ALL PIPING SHALL BE IN ACCORDANCE WITH ASME B31.3 NORMAL FLUID SERVICE NORMAL FLUID SERVICE UNLESS OTHERWISE NOTED.

INTERLOCKS

I/1 SOFTWARE PROCESS INTERLOCK ON LAHH-1123 STOPS PUMP P-4003 AND CLOSES VALVES AOBV-5622 (THIS SHEET), AOBV-1115 (THIS SHEET), AOBV-1324 (SEE SHEET D-6018), AOBV-1708 (SEE SHEET D-6023), AOBV-1157 (SEE SHEET D-6030), STOPS PUMP P1703 (SEE SHEET D-6027), CLOSES AOBV-1103 AND STOPS P-01 AND P-02 IN THE INFLUENT STORAGE FACILITY (SEE SHEET D-6010). STOP PS-5700 ON SHEET P-6010.

I/2 SOFTWARE PROCESS INTERLOCK ON LAHH-1125 (SEE SHEET D-6013) CLOSES VALVES AOBV-1126, AND STOPS P-1701.

KEYED NOTES

1. SKID MATERIAL EQUIPMENT BOUNDARY. PUMP VENDOR WILL INCORPORATE FLEXIBLE COUPLERS ON PUMP AND ISOLATE PUMP VIBRATIONS.
2. SECONDARY CONTAINMENT FOR TAC-4003, TAC-4006 AND TAC-4007 SEPARATE. USE ULTRATECH MODEL 1147 OR EQUAL FOR EACH.
3. SEE FLEX HOSE SCHEDULE FOR ASSIGNED NUMBER AND INTERFACING LINE.

FLEX HOSE IDENTIFIER	
1	CS-012-FH-01
2	LLW-094-FH-01
3	LLW-099-FH-01
4	LLW-133-FH-01
5	LLW-179-FH-01
6	LLW-096-FH-01
7	LLW-095-FH-01
8	NPWC-103-FH-01
9	CS-403-FH-01

4. SEE D-6035 DIAGRAM 3 FOR METERING PUMP/TAC ASSEMBLY.
5. SEE D-6035 DIAGRAM 5 FOR FILTER ASSEMBLY.
6. VALVES PREFIXED WITH "NPWC-1101-".
7. CONNECTION FOR FLUSHING, DRAINING.
8. FIELD RUN 5/8" STAINLESS TUBING.
9. METERING PUMP VENDOR PROVIDES EVERYTHING WITHIN BOUNDARY INCLUDING 18x12MM DISCHARGE TUBE.
10. SEE DRAWING C55865 FOR SHEET CONTINUATION.
11. CA PIPING SHALL BE IN ACCORDANCE WITH ASME B31.3.

"PRIORITY DRAWING"

NO	DATE	CLASS REV	ADC	DESCRIPTION	DWN	DES	CHKD	SUB	APP

AECOM

RLWTF-UP LOW LEVEL WASTE SUBPROJECT

REACTION/PRECIPITATION SYSTEM
TK-1101 P&ID

DRAWN	V DAVISON
DESIGN	S MOORE
CHECKED	E ROGERS
DATE	5/8/14

BLDG. 230 TA-50

SUBMITTED MANNY TAREN — APPROVED FOR RELEASE ED ARTIGLIA

Los Alamos NATIONAL LABORATORY PO Box 1663 Los Alamos, New Mexico 87545

SHEET D-6012
234 OF 434

CLASSIFICATION | REVIEWER | DATE

PROJECT ID 100761 | DRAWING NO C55864 | REV 0

58221 :

File Location: P:\RLWTF LOW LEVEL WASTE FACILITY\D3 CAD\C55864 MAIN BUILDING\SHEET\R14 PROCESS\55864-D-6012-R0.DWG
Plotted By: MOORE, STEPHEN Plot Date: Monday, May 05, 2014

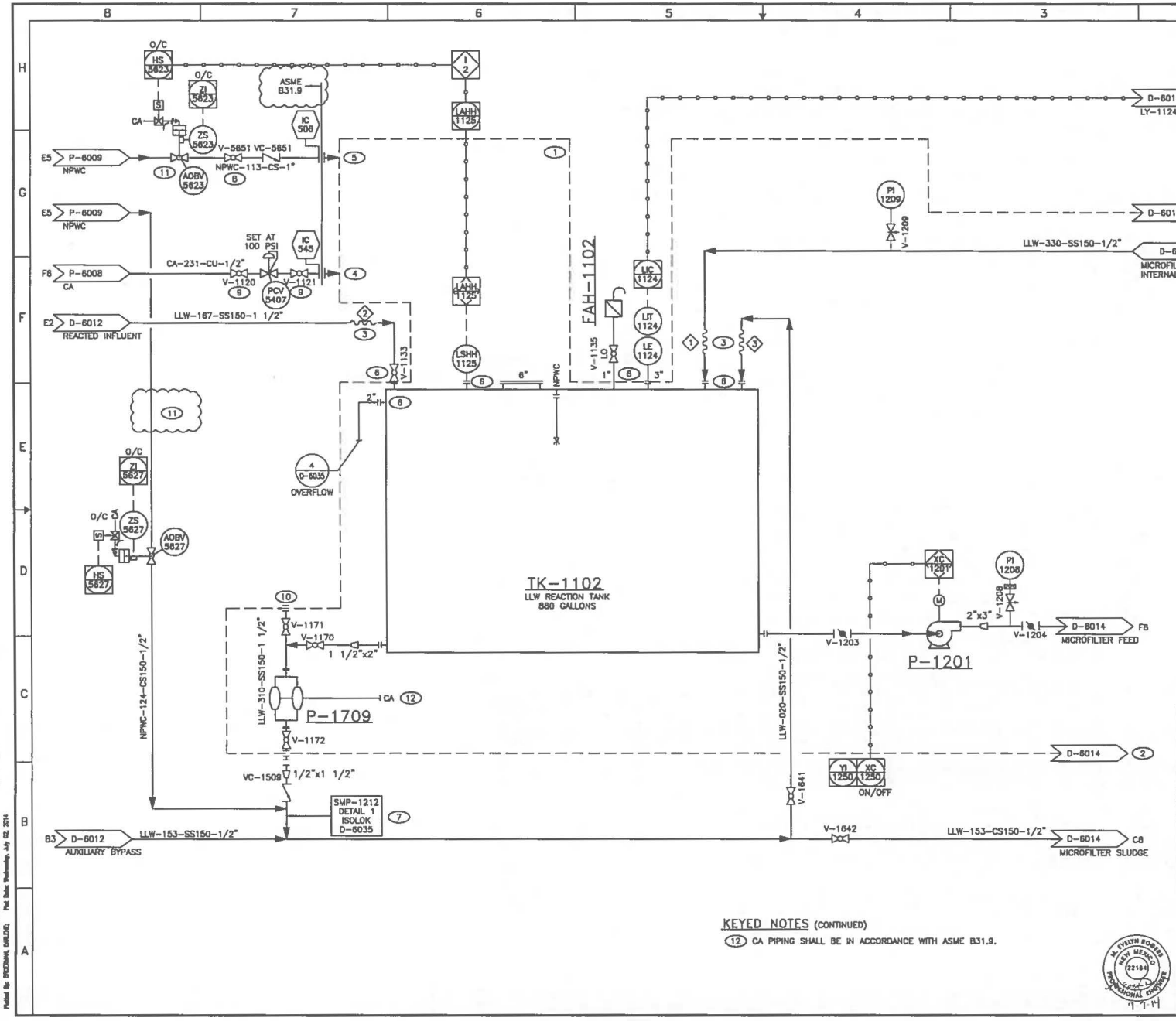

GENERAL NOTES

1. FOR COMPLETE MICROFILTER P&ID DETAILS SEE VENDOR DRAWING.
2. SEE P-6008 FOR COMPRESSED AIR DISTRIBUTION P&ID TO AOBV'S.
3. ALL VALVES PREFIXED WITH "MF-1101-" UNLESS OTHERWISE NOTED.
4. ALL PIPING SHALL BE IN ACCORDANCE WITH ASME B31.3 NORMAL FLUID SERVICE UNLESS OTHERWISE NOTED.

INTERLOCKS

1/2 SOFTWARE PROCESS INTERLOCK ON LAHH-1125 CLOSES VALVES AOBV-5623 (THIS SHEET), AOBV-1126 (SEE SHEET D-6012), AND STOPS PUMP P-1701 (SEE SHEET D-6012).

KEYED NOTES

1. SKID MOUNTED MICROFILTER EQUIPMENT BOUNDARY. PUMP VENDOR WILL INCORPORATE FLEXIBLE COUPLERS ON PUMP AND ISOLATE PUMP VIBRATIONS.
2. CONTINUATION OF VENDOR BOUNDARY SEE SHEET D-6014.
3. SEE FLEX HOSE SCHEDULE FOR ASSIGNED NUMBER AND INTERFACING LINE.

FLEX HOSE IDENTIFIER	
1	LLW-330-FH-01
2	LLW-167-FH-01
3	LLW-020-FH-01

4. COMPRESSED AIR DISTRIBUTION WITHIN MICROFILTER BOUNDARY PROVIDED BY VENDOR.
5. NPWC DISTRIBUTION WITHIN MICROFILTER BOUNDARY PROVIDED BY VENDOR.
6. VENDOR PROVIDES ALL FEATURES IN TOP OF TANK NECESSARY TO INTERFACE WITH THE MICROFILTER, AND IN ADDITION THESE PROJECT SPECIFIC FEATURES: 1/2" NOZZLE FOR SAMPLE RECIRC, 1" FOR VENT, 1 1/2" FOR INFLUENT, 2" SIDE NOZZLE FOR TANK OVERFLOW, 6" INSPECTION PORT, 3" FOR LEVEL ELEMENT.
7. ALL SAMPLERS HAVE COMPRESSED AIR SUPPLY. SEE D-6035 DIAGRAM 1 OR DIAGRAM 2.
8. VALVES PREFIXED WITH "NPWC-1101-".
9. VALVES PREFIXED WITH "CA-1101-".
10. VENDOR PROVIDES SPECIAL CONNECTION POINT FOR FLUSHING.
11. NPWC PIPING SHALL BE IN ACCORDANCE WITH ASME B31.9.

"PRIORITY DRAWING"

KEYED NOTES (CONTINUED)

12. CA PIPING SHALL BE IN ACCORDANCE WITH ASME B31.9.

NO	DATE	CLASS REV	ADC	DESCRIPTION	DWN	DES	CHKD	SUB	APP
1	7/7/14	U		REVISED TEXT AND NOTES					

AECOM

RLWTF-UP LOW LEVEL WASTE SUBPROJECT

MICROFILTRATION SYSTEM
TK-1102 P&ID

BLDG. 230 TA-50

DRAWN	V DAVISON
DESIGN	S MOORE
CHECKED	E ROGERS
DATE	5/8/14

SUBMITTED: MANNY TARIN
APPROVED FOR RELEASE: ED ARTIGLIA

Los Alamos NATIONAL LABORATORY PO Box 1663 Los Alamos, New Mexico 87545

SHEET D-6013
235 OF 434

CLASSIFICATION | REVIEWER | DATE

PROJECT ID 100761 | DRAWING NO C55864 | REV 1

M. EVELYN ROBERS NEW MEXICO 22184 PROFESSIONAL ENGINEER 7-7-14

File Location: W:\RLWTF LOW-LEVEL WASTE FACILITY\100 CAD\C55864 MAIN BUILDING\SHEETS\14 PROCESS\C55864-D-6013-R1.DWG
Plotted By: BROERMAN, DARLENE; Plot Date: Wednesday, July 02, 2014

12286

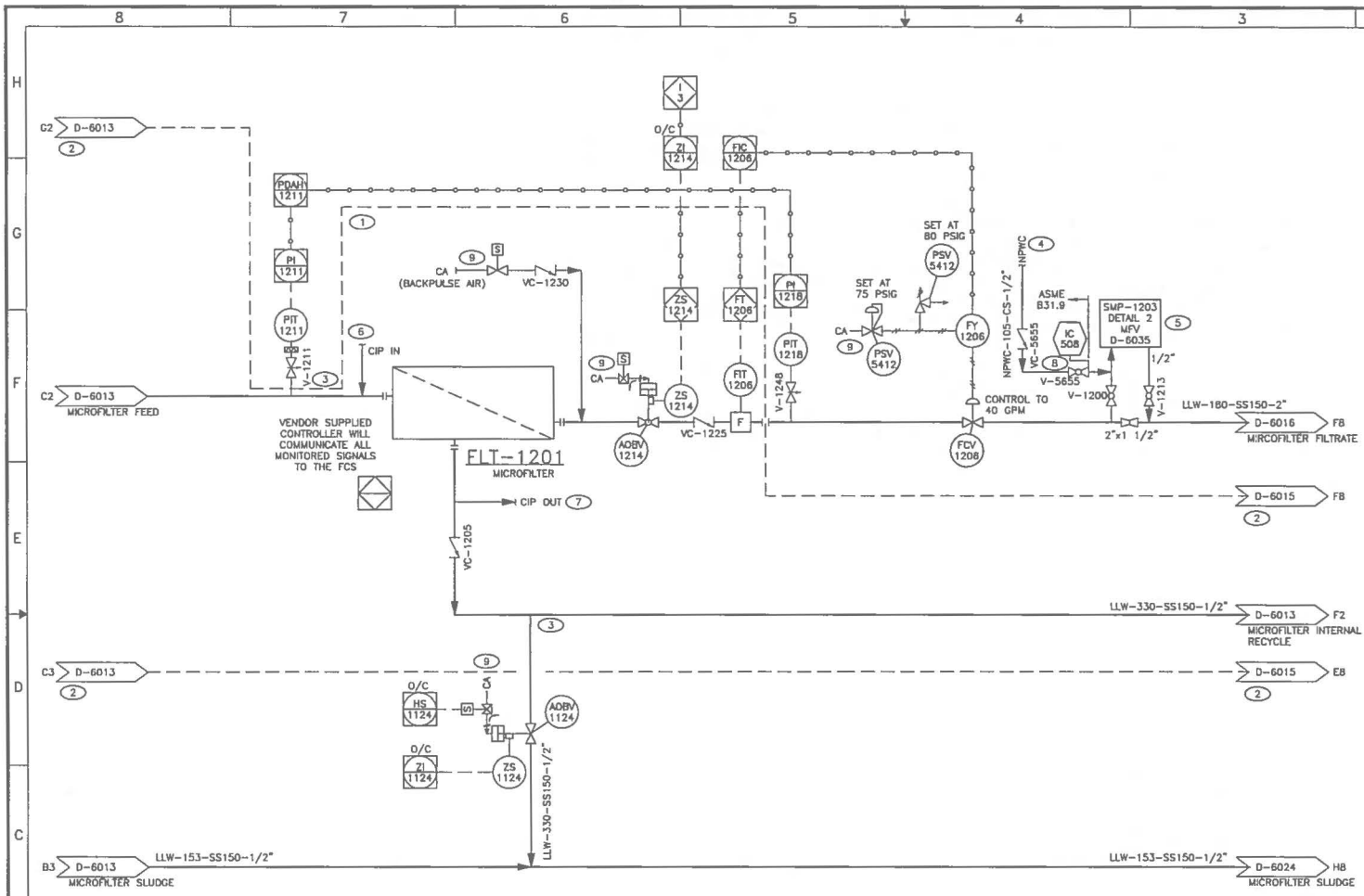

GENERAL NOTES

1. COMPLETE MICROFILTER P&ID DETAILS SEE VENDOR DRAWING.
2. SEE P-6008 FOR COMPRESSED AIR DISTRIBUTION P&ID TO AOBV'S.
3. ALL VALVES PREFIXED WITH "MF-1101-" UNLESS OTHERWISE NOTED.
4. ALL PIPING SHALL BE IN ACCORDANCE WITH ASME B31.3 NORMAL FLUID SERVICE UNLESS OTHERWISE NOTED.

INTERLOCKS

(J) SOFTWARE PROCESS INTERLOCK ON LAHH-1302 (SEE SHEET D-6016) CLOSES VALVE AOBV-1214.

KEYED NOTES

(1) SKID MOUNTED EQUIPMENT BOUNDARY.
(2) SEE SHEETS D-6013 AND D-6015 FOR CONTINUATION OF VENDOR BOUNDARY.
(3) VENDOR PROVIDES 1/2" TAPS FOR SLURRY SIDESTREAM AND PRESSURE.
(4) SEE P-6009 FOR NON-POTABLE WATER P&ID.
(5) ALL SAMPLERS HAVE COMPRESSED AIR SUPPLY. SEE D-6035 DIAGRAM 1 OR DIAGRAM 2.
(6) CLEANING CHEMICALS FROM CIP TANKS (D-6015).
(7) CLEANING CHEMICALS TO CIP TANKS (D-6015).
(8) VALVES PREFIXED WITH "NPWC-1101-".
(9) CA PIPING SHALL BE IN ACCORDANCE WITH ASME B31.3.

"PRIORITY DRAWING"

NO	DATE	CLASS REV	ADC	DESCRIPTION	DWN	DES	CHKD	SUB	APP

AECOM

RLWTF-UP LOW LEVEL WASTE SUBPROJECT

MICROFILTRATION SYSTEM
MICROFILTER P&ID

DRAWN	V DAVISON
DESIGN	S MOORE
CHECKED	E ROGERS
DATE	5/8/14

BLDG. 230 TA-50

SUBMITTED MANNY TARIN — APPROVED FOR RELEASE ED ARTIGLIA

Los Alamos NATIONAL LABORATORY PO Box 1663 Los Alamos, New Mexico 87545

SHEET D-6014
236 OF 434

CLASSIFICATION | REVIEWER | DATE

PROJECT ID 100761 | DRAWING NO C55864 | REV 0

M. EVELYN ROGERS NEW MEXICO 22184 PROFESSIONAL ENGINEER 5/15/14

12287 :

File Location: P:\RLWTF LOW-LEVEL WASTE FACILITY\DD CAD\C55864 MAIN BUILDING\SHEET\R14 PROCESS\55864-D-6014-R0.DWG
Plotted By: MOORE, STEPHEN Plot Date: Monday, May 05, 2014

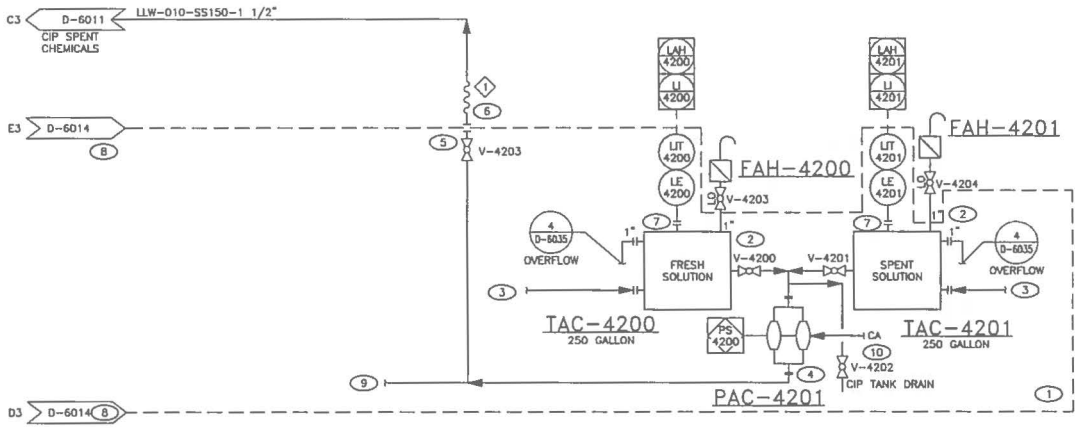

GENERAL NOTES

1. FOR COMPLETE MICROFILTER CIP P&ID DETAILS SEE VENDOR DRAWING.
2. ALL VALVES PREFIXED WITH "MF-1101-" UNLESS OTHERWISE NOTED.
3. ALL PIPING SHALL BE IN ACCORDANCE WITH ASME B31.3 NORMAL FLUID SERVICE UNLESS OTHERWISE NOTED.

KEYED NOTES

1. CLEAN-IN-PLACE SYSTEM PROVIDED BY MICROFILTER VENDOR. WILL BE PART OF SKID-MOUNTED EQUIPMENT BOUNDARY SHOWN ON SHEET D-6014 AND D-6015.
2. PORTS FOR NaOH OR H_2SO_4 PROVIDED. PER VENDOR CLEANING INSTRUCTIONS, ALTERNATIVE CLEANING SOLUTIONS USED AS REQUIRED.
3. FROM MICROFILTERS PER VENDOR DESIGN (CLEANING CHEMICAL RETURN).
4. PUMP PROVIDED WITH CLEAN-IN-PLACE SYSTEM.
5. CIP SPENT CHEMICALS AND FLUSH WATER ARE DISCHARGING TO TK-1101.
6. SEE FLEX HOSE SCHEDULE FOR ASSIGNED NUMBER AND INTERFACING LINE.

FLEX HOSE IDENTIFIER	
1	LLW-010-FH-01

7. VENDOR PROVIDES NOZZLES FOR LEVEL ELEMENTS AND VENTS IN ADDITION TO STANDARD NOZZLES, AND LEVEL ELEMENT AND LIT.
8. SEE SHEET D-6014 FOR CONTINUATION OF VENDOR BOUNDARY.
9. TO MICROFILTER PER VENDOR DESIGN (CLEANING CHEMICAL SUPPLY).
10. CA PIPING SHALL BE IN ACCORDANCE WITH ASME B31.3.

"PRIORITY DRAWING"

NO	DATE	CLASS REV	ADC	DESCRIPTION	DWN	DES	CHKD	SUB	APP

AECOM

RLWTF-UP LOW LEVEL WASTE SUBPROJECT

MICROFILTRATION SYSTEM
CLEAN-IN-PLACE SKID P&ID

BLDG. 230 TA-50

DRAWN	V DAVISON
DESIGN	S MOORE
CHECKED	E ROGERS
DATE	5/8/14

SUBMITTED: MANNY TARIN

APPROVED FOR RELEASE: ED ARTIGLIA

Los Alamos NATIONAL LABORATORY PO Box 1663 Los Alamos, New Mexico 87545

SHEET D-6015

237 OF 434

CLASSIFICATION | REVIEWER | DATE

PROJECT ID 100761 | DRAWING NO C55864 | REV 0

M. EVELYN ROGERS NEW MEXICO 22184 PROFESSIONAL ENGINEER

File Location: P:\RLWTF LOW-LEVEL WASTE FACILITY\100 CAD\C55864 MAIN BUILDING\SHEETS\14 PROCESS\55864-D-6015-R0.DWG
Plotted By: MOORE, STEPHEN Plot Date: Monday, May 03, 2014

: 12288

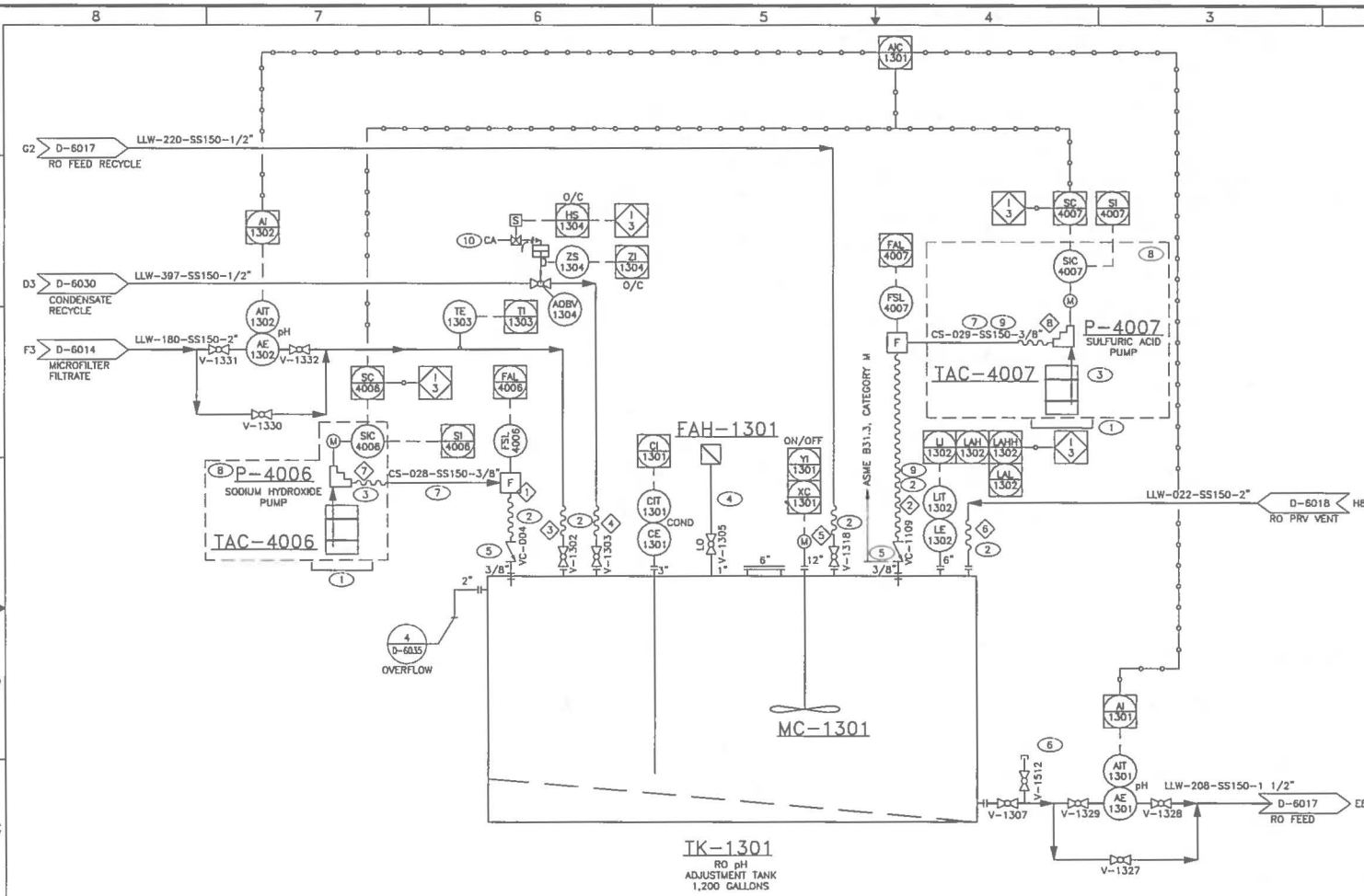

GENERAL NOTES

1. SEE P-6008 FOR COMPRESSED AIR DISTRIBUTION P&ID TO AOBV'S.
2. ALL VALVES PREFIXED WITH "RO-1101-" UNLESS OTHERWISE NOTED.
3. ALL PIPING SHALL BE IN ACCORDANCE WITH ASME B31.3 NORMAL FLUID SERVICE UNLESS OTHERWISE NOTED.

INTERLOCKS

I 3 — SOFTWARE PROCESS INTERLOCK ON LAHH-1302 STOPS P-4006 AND P-4007, CLOSES AOBV-1304 (THIS SHEET) CLOSES AOBV-1214 (SEE SHEET D-6014).

KEYED NOTES

1. SECONDARY CONTAINMENT FOR TAC-4003, TAC-4006 AND TAC-4007 SEPARATE. USE ULTRATECH MODEL 1147 OR EQUAL FOR EACH.
2. SEE FLEX HOSE SCHEDULE FOR ASSIGNED NUMBER AND INTERFACING LINE.

FLEX HOSE IDENTIFIER	
1	CS-028-FH-01
2	CS-029-FH-01
3	LLW-180-FH-01
4	LLW-397-FH-01
5	LLW-220-FH-02
6	LLW-022-FH-01
7	CS-406-FH-01
8	CS-407-FH-01

3. SEE D-6035 DIAGRAM 3 FOR METERING PUMP/TAC ASSEMBLY.
4. SEE D-6035 DIAGRAM 5 FOR FILTER ASSEMBLY.
5. VALVES ARE PREFIXED WITH "CS-1101-".
6. CONNECTION FOR FLUSHING DRAINING.
7. FIELD RUN 3/8" STAINLESS TUBING.
8. METERING PUMP VENDOR PROVIDES EVERYTHING WITHIN BOUNDARY INCLUDING 3/8" DISCHARGE HOSE.
9. PIPING SHALL BE IN ACCORDANCE WITH ASME B31.3 CATEGORY M.
10. CA PIPING SHALL BE IN ACCORDANCE WITH ASME B31.3.

"PRIORITY DRAWING"

NO	DATE	CLASS REV	ADC	DESCRIPTION	DWN	DES	CHKD	SUB	APP

AECOM

RLWTF-UP LOW LEVEL WASTE SUBPROJECT

REVERSE OSMOSIS SYSTEM
TK-1301 P&ID

BLDG. 230 TA-50

DRAWN	V DAVISON
DESIGN	S MOORE
CHECKED	E ROGERS
DATE	5/8/14

SUBMITTED MANNY TARIN

APPROVED FOR RELEASE ED ARTIGLIA

Los Alamos NATIONAL LABORATORY PO Box 1663 Los Alamos, New Mexico 87545

SHEET D-6016

238 OF 434

CLASSIFICATION | REVIEWER | DATE

PROJECT ID 100761 | DRAWING NO C55864 | REV 0

M. EVELYN ROGERS NEW MEXICO 22184 PROFESSIONAL ENGINEER

File Location: P:\RLWTF LOW-LEVEL WASTE FACILITY\000 CAD\C55864 MAIN BUILD\HQ\SHEETS\14 PROCESS\C55864-D-6016-RO.DWG
Plotted By: MOORE, STEPHEN Plot Date: Monday, May 05, 2014

12289

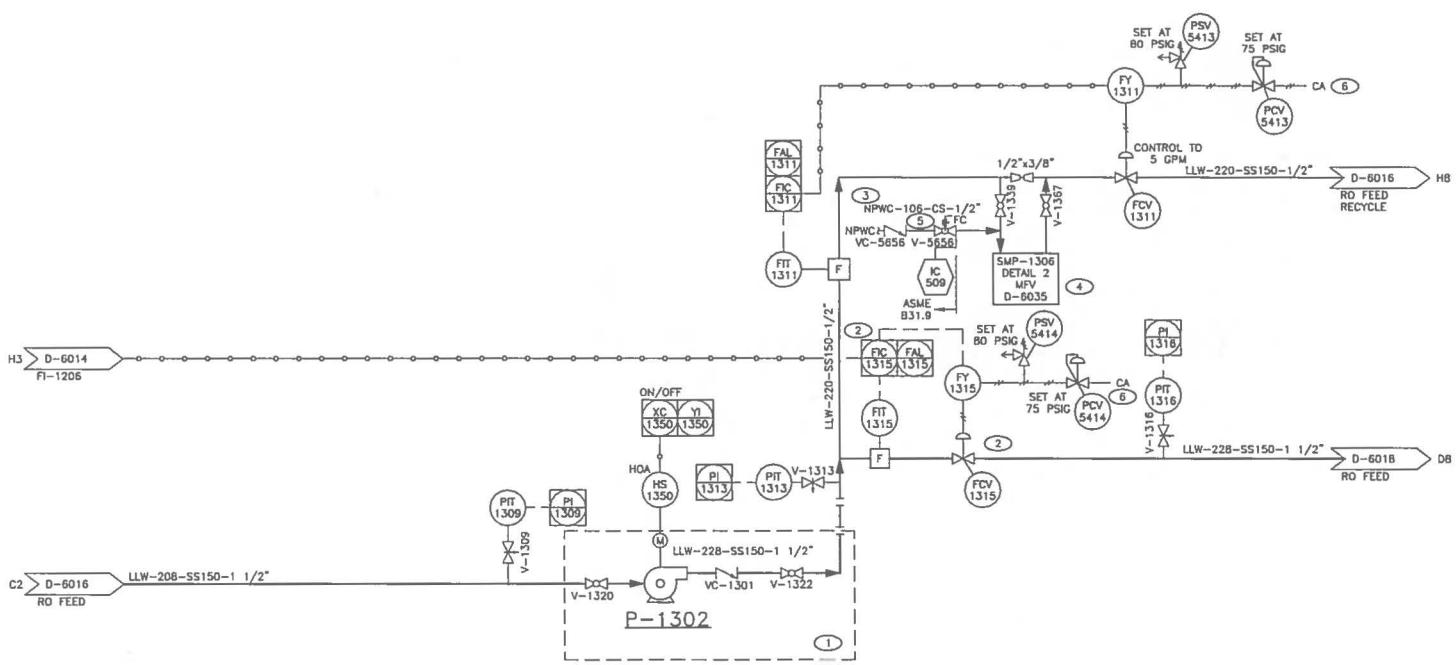

GENERAL NOTES

1. SEE P-6008 FOR COMPRESSED AIR DISTRIBUTION P&ID TO AOBV'S.
2. ALL VALVES PREFIXED WITH "RO-1101-" UNLESS OTHERWISE NOTED.
3. ALL PIPING SHALL BE IN ACCORDANCE WITH ASME B31.3 NORMAL FLUID SERVICE UNLESS OTHERWISE NOTED.

KEYED NOTES

1. SKID MOUNTED EQUIPMENT BOUNDARY. PUMP VENDOR WILL INCORPORATE FLEXIBLE COUPLERS ON PUMP AND ISOLATE PUMP VIBRATIONS.
2. SET POINT FOR FIC-1315 IS FROM FI-1206 (D-6014) TYPICAL FLOW IN RANGE 30-40 GPM. PUMP STOPS/IS DISABLED WHEN TK-1301 HAS LESS THAN 600 GALLONS.
3. SEE P-6009 FOR NON-POTABLE WATER P&ID.
4. ALL SAMPLERS HAVE COMPRESSED AIR SUPPLY. SEE D-6035 DIAGRAM 1 OR DIAGRAM 2.
5. VALVES PREFIXED WITH "NPWC-1101-".
6. CA PIPING SHALL BE IN ACCORDANCE WITH ASME B31.3.

"PRIORITY DRAWING"

NO	DATE	CLASS REV	ADC	DESCRIPTION	DWN	DES	CHKD	SUB	APP

AECOM

RLWTF-UP LOW LEVEL WASTE SUBPROJECT

REVERSE OSMOSIS SYSTEM
P-1302 P&ID

BLDG. 230 TA-50

DRAWN	V DAVISON
DESIGN	S MOORE
CHECKED	E ROGERS
DATE	5/8/14

SUBMITTED MANNY TARIN

APPROVED FOR RELEASE ED ARTIGLIA

M. EVELYN ROGERS NEW MEXICO 22184 PROFESSIONAL ENGINEER 5/15/14

Los Alamos NATIONAL LABORATORY PO Box 1663 Los Alamos, New Mexico 87545

SHEET D-6017

239 OF 434

CLASSIFICATION | REVIEWER | DATE

PROJECT ID 100761 | DRAWING NO C55864 | REV 0

File Location: P:\RLWTF LOW-LEVEL WASTE FACILITY\000 CAD\C55864 MAIN BUILD\NO\SHEETS\14 PROCESS\C55864-D-6017-RO.DWG
Plotted By: MOORE, STEPHEN Plot Date: Monday, May 05, 2014
06221 : 12290

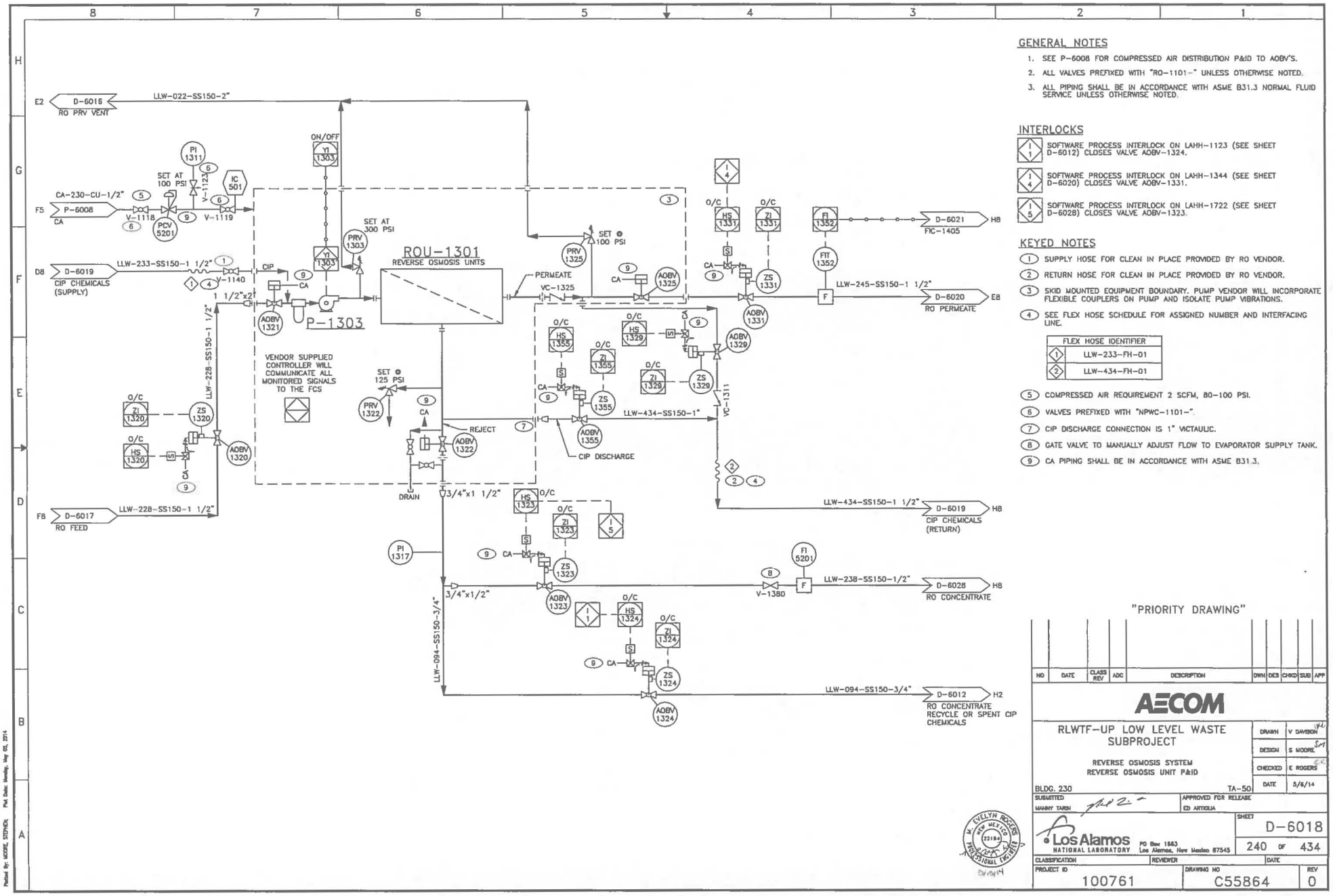

GENERAL NOTES

1. SEE P-6008 FOR COMPRESSED AIR DISTRIBUTION P&ID TO AOBV'S.
2. ALL VALVES PREFIXED WITH "RO-1101-" UNLESS OTHERWISE NOTED.
3. ALL PIPING SHALL BE IN ACCORDANCE WITH ASME B31.3 NORMAL FLUID SERVICE UNLESS OTHERWISE NOTED.

INTERLOCKS

(I 1) SOFTWARE PROCESS INTERLOCK ON LAHH-1123 (SEE SHEET D-6012) CLOSES VALVE AOBV-1324.

(I 4) SOFTWARE PROCESS INTERLOCK ON LAHH-1344 (SEE SHEET D-6020) CLOSES VALVE AOBV-1331.

(I 5) SOFTWARE PROCESS INTERLOCK ON LAHH-1722 (SEE SHEET D-6028) CLOSES VALVE AOBV-1323.

KEYED NOTES

(1) SUPPLY HOSE FOR CLEAN IN PLACE PROVIDED BY RO VENDOR.

(2) RETURN HOSE FOR CLEAN IN PLACE PROVIDED BY RO VENDOR.

(3) SKID MOUNTED EQUIPMENT BOUNDARY. PUMP VENDOR WILL INCORPORATE FLEXIBLE COUPLERS ON PUMP AND ISOLATE PUMP VIBRATIONS.

(4) SEE FLEX HOSE SCHEDULE FOR ASSIGNED NUMBER AND INTERFACING LINE.

FLEX HOSE IDENTIFIER	
1	LLW-233-FH-01
2	LLW-434-FH-01

(5) COMPRESSED AIR REQUIREMENT 2 SCFM, 80-100 PSI.

(6) VALVES PREFIXED WITH "NPWC-1101-".

(7) CIP DISCHARGE CONNECTION IS 1" VICTAULIC.

(8) GATE VALVE TO MANUALLY ADJUST FLOW TO EVAPORATOR SUPPLY TANK.

(9) CA PIPING SHALL BE IN ACCORDANCE WITH ASME B31.3.

"PRIORITY DRAWING"

NO	DATE	CLASS REV	ADC	DESCRIPTION	DWN	DES	CHKD	SUB	APP

AECOM

RLWTF-UP LOW LEVEL WASTE SUBPROJECT

REVERSE OSMOSIS SYSTEM
REVERSE OSMOSIS UNIT P&ID

BLDG. 230 TA-50

DRAWN	V DAVISON
DESIGN	S MOORE
CHECKED	E ROGERS
DATE	5/6/14

SUBMITTED MANNY TARIN

APPROVED FOR RELEASE ED ARTIOLIA

Los Alamos NATIONAL LABORATORY PO Box 1663 Los Alamos, New Mexico 87545

SHEET	D-6018
	240 OF 434

CLASSIFICATION | REVIEWER | DATE

PROJECT ID	DRAWING NO	REV
100761	C55864	0

M. EVELYN ROGERS NEW MEXICO 22184 PROFESSIONAL ENGINEER

15221 :

File Location: P:\RLWTF LOW-LEVEL WASTE FACILITY\DGD CAD\C55864 MAIN BUILDING\SHEETS\14 PROCESS\P55864-D-6018-R0.DWG
Plotted By: MOORE, STEVEN Plot Date: Monday, May 05, 2014

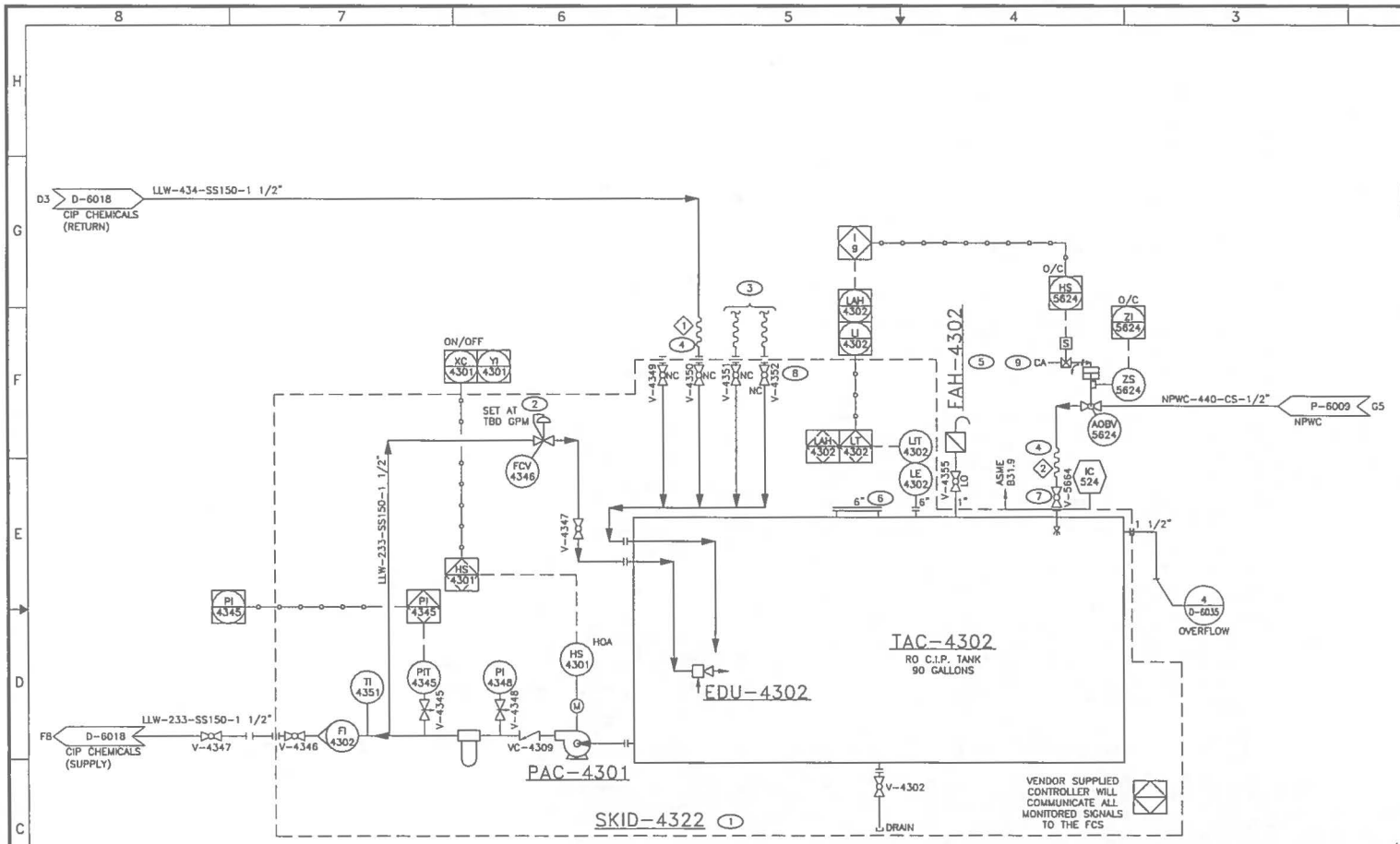

GENERAL NOTES

1. SEE P-6008 FOR COMPRESSED AIR DISTRIBUTION P&ID TO AOBV'S.
2. ALL VALVES PREFIXED WITH "RO-1101-" UNLESS OTHERWISE NOTED.
3. ALL PIPING SHALL BE IN ACCORDANCE WITH ASME B31.3 NORMAL FLUID SERVICE UNLESS OTHERWISE NOTED.

INTERLOCKS

I 9 — SOFTWARE PROCESS INTERLOCK ON LAH-4302 CLOSES AOBV-5624.

KEYED NOTES

1. SKID MOUNTED EQUIPMENT BOUNDARY. PUMP VENDOR WILL INCORPORATE FLEXIBLE COUPLERS ON PUMP AND ISOLATE PUMP VIBRATIONS.
2. VALVE FOR VENDOR PROVIDED COMPONENT SET PER OPERATING INSTRUCTIONS.
3. CONNECTION FOR NaOH OR H_2SO_4 OR ALTERNATIVE CLEANING SYSTEM AS REQUIRED PER VENDOR CLEANING INSTRUCTIONS. LINE NOT NORMALLY CONNECTED.
4. SEE FLEX HOSE SCHEDULE FOR ASSIGNED NUMBER AND INTERFACING LINE.

FLEX HOSE IDENTIFIER	
1	LLW-434-FH-02
2	NPWC-440-FH-01

5. SEE SHEET D-6035 DIAGRAM 5 FOR FILTER ASSEMBLY.
6. VENDOR PROVIDES ALL FEATURES IN TOP OF TANK FOR STANDARD CIP. IN ADDITION THESE PROJECT SPECIFIC FEATURES: 6" VIEW PORT, 6" LEVEL, 1" VENT AND 1/2" NPWC.
7. VALVE PREFIXED WITH "NPWC-1101-".
8. CIP CHEMICALS RETURN AND ADDITION VALVES CLOSED EXCEPT DURING CHEMICAL CLEANING.
9. CA PIPING SHALL BE IN ACCORDANCE WITH ASME B31.3.

"PRIORITY DRAWING"

NO	DATE	CLASS REV	ADC	DESCRIPTION	DWN	DES	CHKD	SUB	APP

AECOM

RLWTF-UP LOW LEVEL WASTE SUBPROJECT

REVERSE OSMOSIS SYSTEM
TAC-4302 P&ID

BLDG. 230 TA-50

DRAWN	V DAVISON
DESIGN	S MOORE
CHECKED	E ROGERS
DATE	5/8/14

SUBMITTED: MANNY TARIN
APPROVED FOR RELEASE: ED ARTIOLIA

Los Alamos NATIONAL LABORATORY — PO Box 1663, Los Alamos, New Mexico 87545

SHEET: D-6019
241 OF 434

CLASSIFICATION | REVIEWER | DATE

PROJECT ID	DRAWING NO	REV
100761	C55864	0

J. EVELYN ROGERS — NEW MEXICO — 12184 — PROFESSIONAL ENGINEER

25221 :

File Location: P:\RLWTF LOW-LEVEL WASTE FACILITY\000 CAD\C55864 MAIN BUILD\D\SHEETS\14 PROCESS\55864-D-6019-R0.DWG
Plotted By: DAVISON, WANDA Plot Date: Wednesday, May 07, 2014

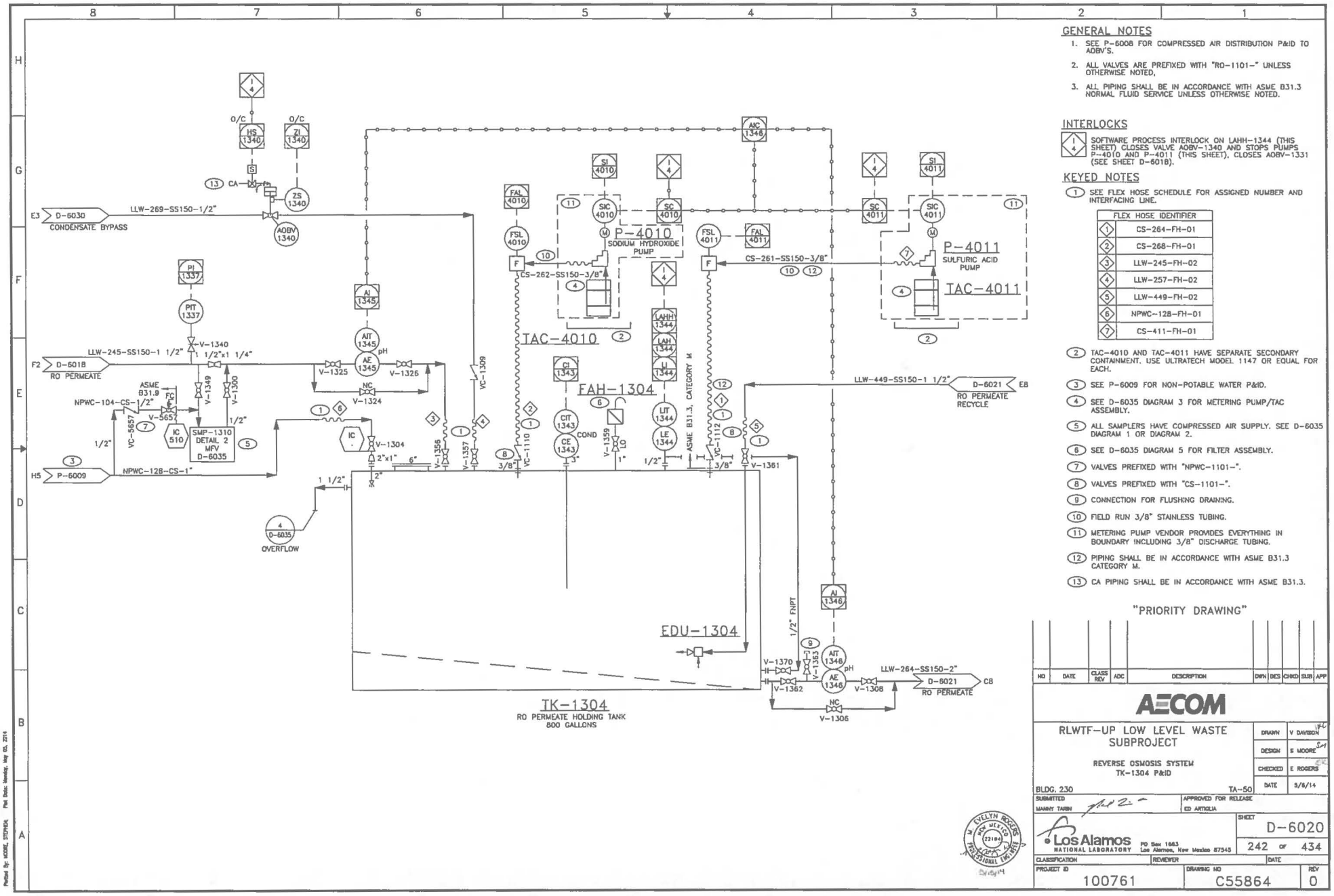

GENERAL NOTES

1. SEE P-6008 FOR COMPRESSED AIR DISTRIBUTION P&ID TO AOBV'S.
2. ALL VALVES ARE PREFIXED WITH "RO-1101-" UNLESS OTHERWISE NOTED,
3. ALL PIPING SHALL BE IN ACCORDANCE WITH ASME B31.3 NORMAL FLUID SERVICE UNLESS OTHERWISE NOTED.

INTERLOCKS

SOFTWARE PROCESS INTERLOCK ON LAHH-1344 (THIS SHEET) CLOSES VALVE AOBV-1340 AND STOPS PUMPS P-4010 AND P-4011 (THIS SHEET), CLOSES AOBV-1331 (SEE SHEET D-6018).

KEYED NOTES

(1) SEE FLEX HOSE SCHEDULE FOR ASSIGNED NUMBER AND INTERFACING LINE.

FLEX HOSE IDENTIFIER	
1	CS-264-FH-01
2	CS-268-FH-01
3	LLW-245-FH-02
4	LLW-257-FH-02
5	LLW-449-FH-02
6	NPWC-128-FH-01
7	CS-411-FH-01

(2) TAC-4010 AND TAC-4011 HAVE SEPARATE SECONDARY CONTAINMENT. USE ULTRATECH MODEL 1147 OR EQUAL FOR EACH.

(3) SEE P-6009 FOR NON-POTABLE WATER P&ID.

(4) SEE D-6035 DIAGRAM 3 FOR METERING PUMP/TAC ASSEMBLY.

(5) ALL SAMPLERS HAVE COMPRESSED AIR SUPPLY. SEE D-6035 DIAGRAM 1 OR DIAGRAM 2.

(6) SEE D-6035 DIAGRAM 5 FOR FILTER ASSEMBLY.

(7) VALVES PREFIXED WITH "NPWC-1101-".

(8) VALVES PREFIXED WITH "CS-1101-".

(9) CONNECTION FOR FLUSHING DRAINING.

(10) FIELD RUN 3/8" STAINLESS TUBING.

(11) METERING PUMP VENDOR PROVIDES EVERYTHING IN BOUNDARY INCLUDING 3/8" DISCHARGE TUBING.

(12) PIPING SHALL BE IN ACCORDANCE WITH ASME B31.3 CATEGORY M.

(13) CA PIPING SHALL BE IN ACCORDANCE WITH ASME B31.3.

"PRIORITY DRAWING"

NO	DATE	CLASS REV	ADC	DESCRIPTION	DWN	DES	CHKD	SUB	APP

AECOM

RLWTF-UP LOW LEVEL WASTE SUBPROJECT

REVERSE OSMOSIS SYSTEM
TK-1304 P&ID

DRAWN	V DAVISON
DESIGN	E MOORE
CHECKED	E ROGERS
DATE	5/8/14

BLDG. 230 TA-50

SUBMITTED MANNY TARIN

APPROVED FOR RELEASE ED ARTIGLIA

Los Alamos NATIONAL LABORATORY PO Box 1663 Los Alamos, New Mexico 87545

SHEET D-6020

242 OF 434

CLASSIFICATION REVIEWER DATE

PROJECT ID 100761

DRAWING NO C55864

REV 0

E6221 :

File Location: P:\RLWTF LOW-LEVEL WASTE FACILITY\SD CAD\C55864 MAIN BUILDING\SHEET\R14 PROCESS\C55864-D-6020-RO.DWG
Plotted By: MOORE, STEPHEN Plot Date: Monday, May 05, 2014

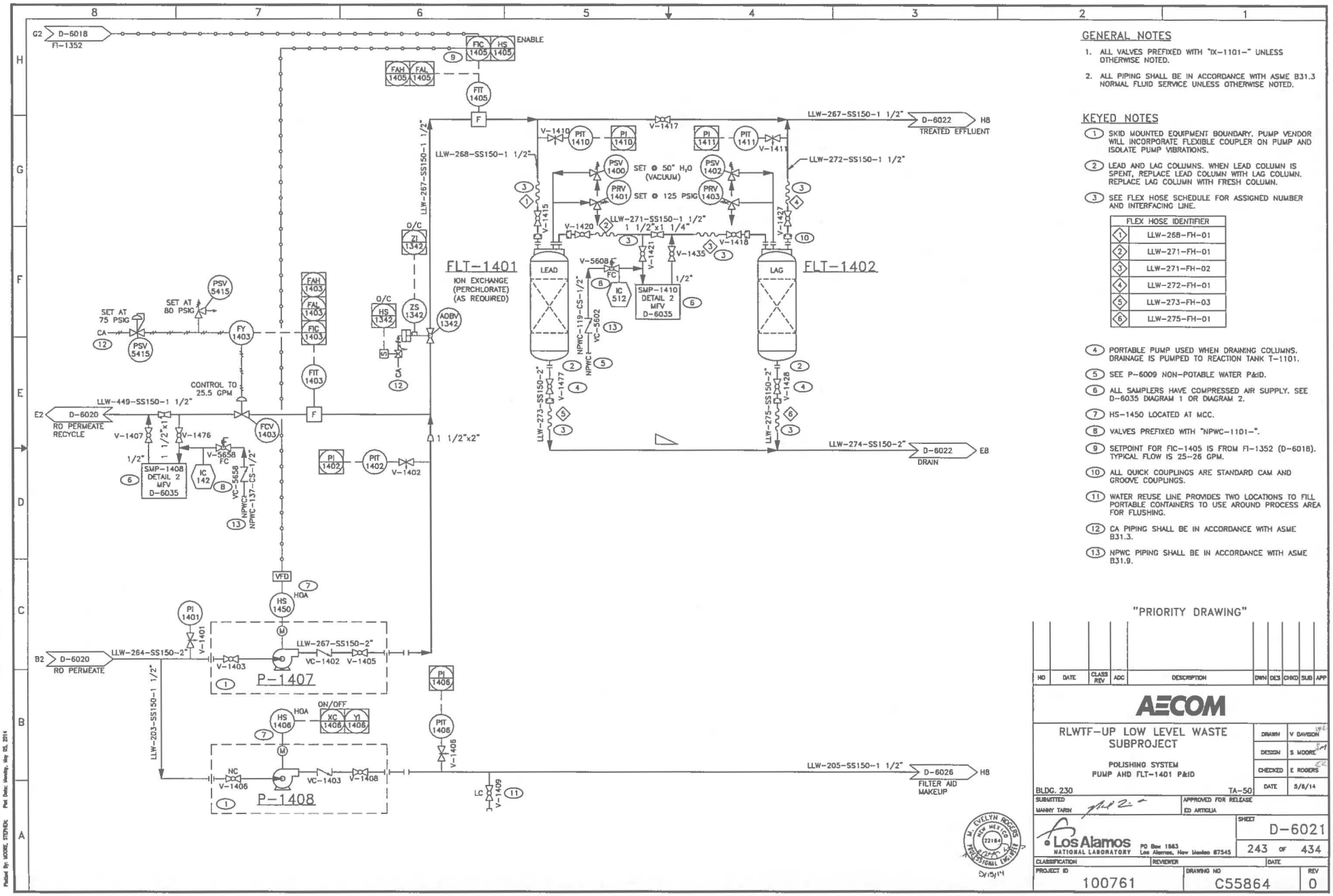

GENERAL NOTES

1. ALL VALVES PREFIXED WITH "IX-1101-" UNLESS OTHERWISE NOTED.
2. ALL PIPING SHALL BE IN ACCORDANCE WITH ASME B31.3 NORMAL FLUID SERVICE UNLESS OTHERWISE NOTED.

KEYED NOTES

(1) SKID MOUNTED EQUIPMENT BOUNDARY. PUMP VENDOR WILL INCORPORATE FLEXIBLE COUPLER ON PUMP AND ISOLATE PUMP VIBRATIONS.

(2) LEAD AND LAG COLUMNS. WHEN LEAD COLUMN IS SPENT, REPLACE LEAD COLUMN WITH LAG COLUMN. REPLACE LAG COLUMN WITH FRESH COLUMN.

(3) SEE FLEX HOSE SCHEDULE FOR ASSIGNED NUMBER AND INTERFACING LINE.

FLEX HOSE IDENTIFIER	
1	LLW-268-FH-01
2	LLW-271-FH-01
3	LLW-271-FH-02
4	LLW-272-FH-01
5	LLW-273-FH-03
6	LLW-275-FH-01

(4) PORTABLE PUMP USED WHEN DRAINING COLUMNS. DRAINAGE IS PUMPED TO REACTION TANK T-1101.

(5) SEE P-6009 NON-POTABLE WATER P&ID.

(6) ALL SAMPLERS HAVE COMPRESSED AIR SUPPLY. SEE D-6035 DIAGRAM 1 OR DIAGRAM 2.

(7) HS-1450 LOCATED AT MCC.

(8) VALVES PREFIXED WITH "NPWC-1101-".

(9) SETPOINT FOR FIC-1405 IS FROM FI-1352 (D-6018). TYPICAL FLOW IS 25-26 GPM.

(10) ALL QUICK COUPLINGS ARE STANDARD CAM AND GROOVE COUPLINGS.

(11) WATER REUSE LINE PROVIDES TWO LOCATIONS TO FILL PORTABLE CONTAINERS TO USE AROUND PROCESS AREA FOR FLUSHING.

(12) CA PIPING SHALL BE IN ACCORDANCE WITH ASME B31.3.

(13) NPWC PIPING SHALL BE IN ACCORDANCE WITH ASME B31.9.

"PRIORITY DRAWING"

NO	DATE	CLASS REV	ADC	DESCRIPTION	DWN	DES	CHKD	SUB	APP

AECOM

RLWTF-UP LOW LEVEL WASTE SUBPROJECT

POLISHING SYSTEM
PUMP AND FLT-1401 P&ID

DRAWN	V DAVISON
DESIGN	S MOORE
CHECKED	E ROGERS
DATE	5/8/14

BLDG. 230 TA-50

SUBMITTED: MANNY TARIN — APPROVED FOR RELEASE: ED ARTIGLIA

Los Alamos NATIONAL LABORATORY PO Box 1663 Los Alamos, New Mexico 87545

SHEET D-6021
243 OF 434

CLASSIFICATION | REVIEWER | DATE

PROJECT ID 100761 | DRAWING NO C55864 | REV 0

M. EVELYN ROGERS NEW MEXICO 22184 PROFESSIONAL ENGINEER 5/15/14

Plot Date: Monday, May 05, 2014
Plotted By: MOORE, STEPHEN
File: Location: P:\RLWTF LOW-LEVEL WASTE FACILITY\DD CAD\SUBM MAN BUILDING\DGN\EE7B1H-PROCESS\SUBMAD-6021-RO.DWG

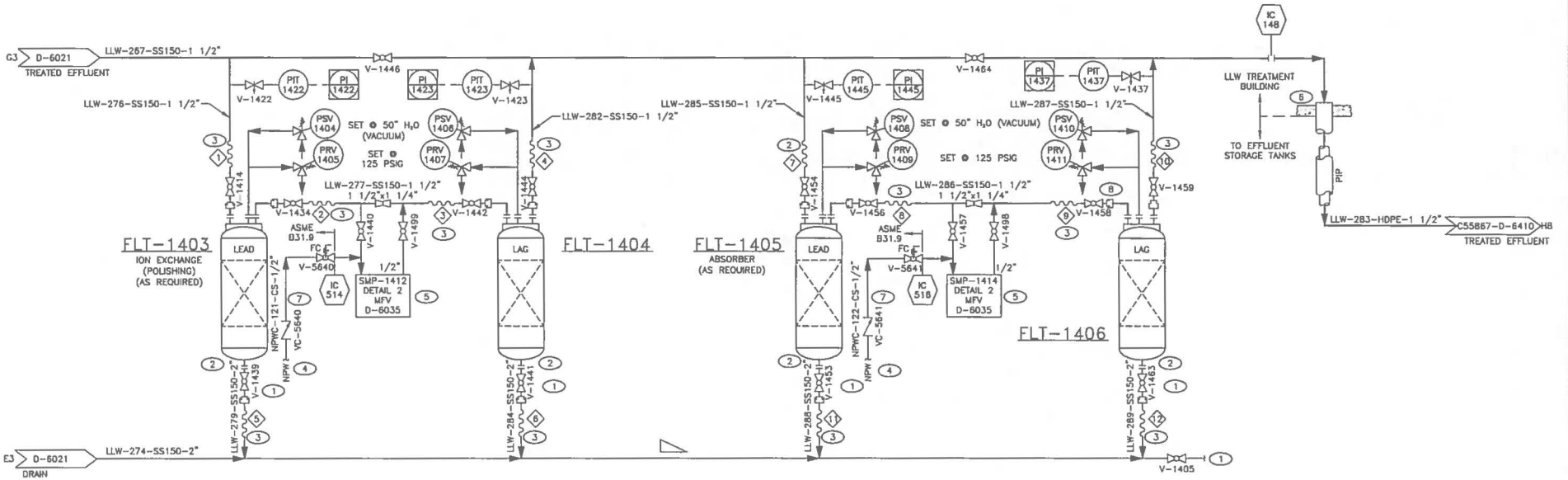

GENERAL NOTES

1. ALL VALVES PREFIXED WITH "IX-1101-" UNLESS OTHERWISE NOTED.
2. ALL PIPING SHALL BE IN ACCORDANCE WITH ASME B31.3 NORMAL FLUID SERVICE UNLESS OTHERWISE NOTED.

KEYED NOTES

1. FIELD ROUTE DRAIN LINE TO NEAREST FLOOR TRENCH.
2. LEAD AND LAG COLUMNS. WHEN LEAD COLUMN IS SPENT, REPLACE LEAD COLUMN WITH LAG COLUMN. REPLACE LAG COLUMN WITH FRESH COLUMN.
3. SEE FLEX HOSE SCHEDULE FOR ASSIGNED NUMBER AND INTERFACING LINE.
4. SEE P-6009 FOR NON-POTABLE WATER P&ID.
5. ALL SAMPLERS HAVE COMPRESSED AIR SUPPLY. SEE D-6035 DIAGRAM 1 OR DIAGRAM 2.
6. SECONDARY PIPE CAPPED WITH ASAHI DOGBONE TO PREVENT DRAINAGE.
7. VALVES PREFIXED WITH "NPWC-1101-".
8. ALL QUICK COUPLINGS ARE STANDARD CAM AND GROOVE COUPLINGS. COUPLINGS WILL MEET FEDERAL SPECIFICATION A-A-59326 (FORMERLY MIL-C-27487).

FLEX HOSE IDENTIFIER	
1	LLW-276-FH-01
2	LLW-277-FH-01
3	LLW-277-FH-02
4	LLW-282-FH-01
5	LLW-283-FH-01
6	LLW-284-FH-01
7	LLW-285-FH-01
8	LLW-286-FH-01
9	LLW-286-FH-02
10	LLW-287-FH-01
11	LLW-288-FH-01
12	LLW-289-FH-01

"PRIORITY DRAWING"

NO	DATE	CLASS REV	ADC	DESCRIPTION	DWN	DES	CHKD	SUB	APP

AECOM

RLWTF-UP LOW LEVEL WASTE SUBPROJECT

POLISHING SYSTEM
FLT-1403 AND FLT-1405 P&ID

BLDG. 230 TA-50

DRAWN	V DAVISON
DESIGN	S MOORE
CHECKED	E ROGERS
DATE	5/8/14

SUBMITTED MANNY TARIN

APPROVED FOR RELEASE ED ARTIGLIA

Los Alamos NATIONAL LABORATORY PO Box 1663 Los Alamos, New Mexico 87545

SHEET D-6022

244 OF 434

CLASSIFICATION | REVIEWER | DATE

PROJECT ID 100761 | DRAWING NO C55864 | REV 0

M. EVELYN ROGERS NEW MEXICO 22184 PROFESSIONAL ENGINEER 5/15/14

File Location: P:\RLWTF LOW-LEVEL WASTE FACILITY\600 CAD\C55864 MAIN BUILDING\SHEETS\14 PROCESS\C55864-D-6022-R0.DWG
Plotted By: MOORE, STEPHEN Plot Date: Monday, May 05, 2014

5622 1 :

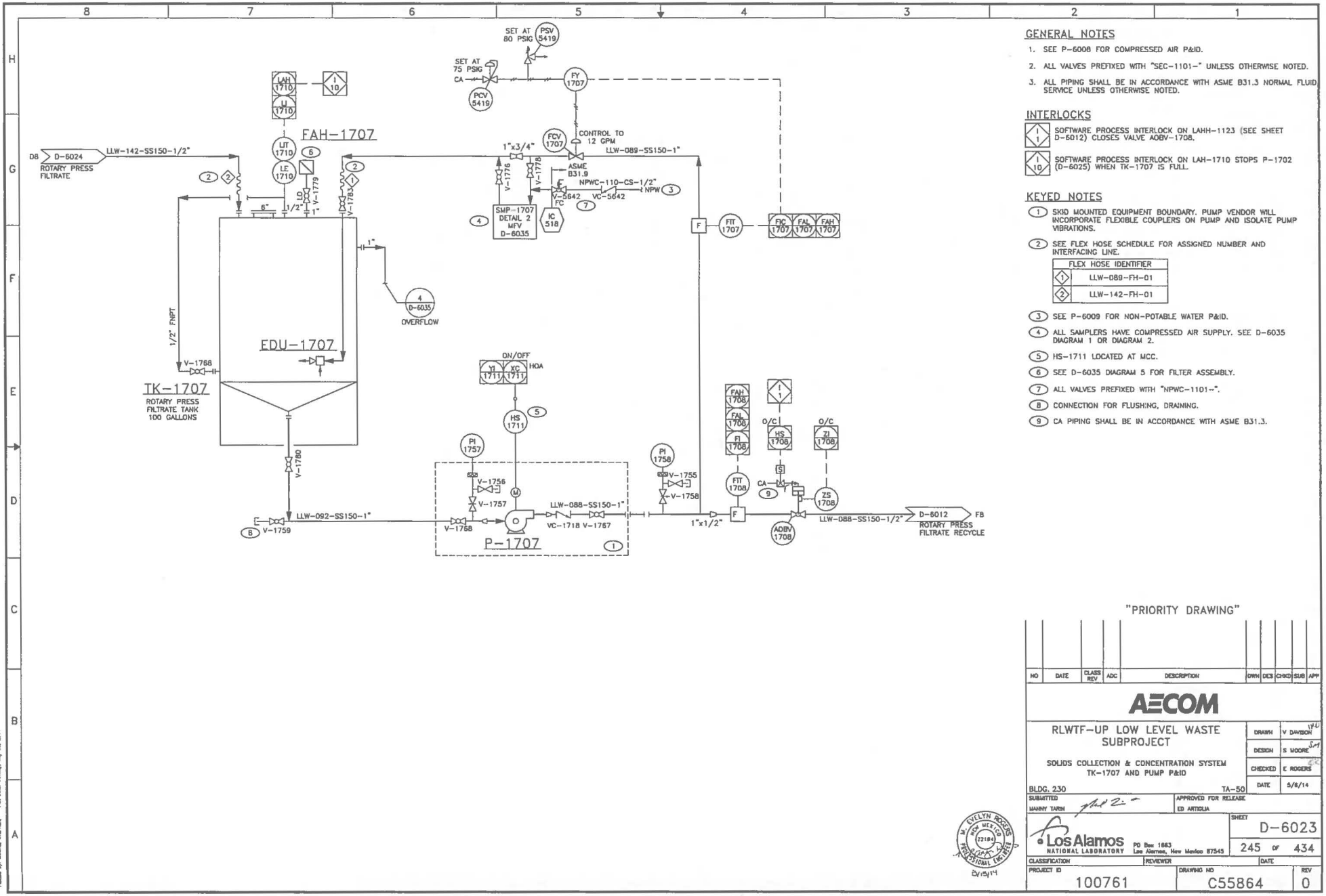

GENERAL NOTES

1. SEE P-6008 FOR COMPRESSED AIR P&ID.
2. ALL VALVES PREFIXED WITH "SEC-1101-" UNLESS OTHERWISE NOTED.
3. ALL PIPING SHALL BE IN ACCORDANCE WITH ASME B31.3 NORMAL FLUID SERVICE UNLESS OTHERWISE NOTED.

INTERLOCKS

I 1 — SOFTWARE PROCESS INTERLOCK ON LAHH-1123 (SEE SHEET D-6012) CLOSES VALVE AOBV-1708.

I 10 — SOFTWARE PROCESS INTERLOCK ON LAH-1710 STOPS P-1702 (D-6025) WHEN TK-1707 IS FULL.

KEYED NOTES

1. SKID MOUNTED EQUIPMENT BOUNDARY. PUMP VENDOR WILL INCORPORATE FLEXIBLE COUPLERS ON PUMP AND ISOLATE PUMP VIBRATIONS.
2. SEE FLEX HOSE SCHEDULE FOR ASSIGNED NUMBER AND INTERFACING LINE.

FLEX HOSE IDENTIFIER	
1	LLW-089-FH-01
2	LLW-142-FH-01

3. SEE P-6009 FOR NON-POTABLE WATER P&ID.
4. ALL SAMPLERS HAVE COMPRESSED AIR SUPPLY. SEE D-6035 DIAGRAM 1 OR DIAGRAM 2.
5. HS-1711 LOCATED AT MCC.
6. SEE D-6035 DIAGRAM 5 FOR FILTER ASSEMBLY.
7. ALL VALVES PREFIXED WITH "NPWC-1101-".
8. CONNECTION FOR FLUSHING, DRAINING.
9. CA PIPING SHALL BE IN ACCORDANCE WITH ASME B31.3.

"PRIORITY DRAWING"

NO	DATE	CLASS REV	ADC	DESCRIPTION	OWN	DES	CHKD	SUB	APP

AECOM

RLWTF-UP LOW LEVEL WASTE SUBPROJECT

SOLIDS COLLECTION & CONCENTRATION SYSTEM TK-1707 AND PUMP P&ID

BLDG. 230 TA-50

DRAWN	V DAVISON
DESIGN	S MOORE
CHECKED	E ROGERS
DATE	5/8/14

SUBMITTED MANNY TARIN

APPROVED FOR RELEASE ED ARTIOLIA

Los Alamos NATIONAL LABORATORY PO Box 1663 Los Alamos, New Mexico 87545

SHEET D-6023

245 OF 434

CLASSIFICATION | REVIEWER | DATE

PROJECT ID 100761 | DRAWING NO C55864 | REV 0

96221 :

File Location: P:\RLWTF LOW-LEVEL WASTE FACILITY\DD CAD\C55864 MAIN BUILDING\SHEETS\R14 PROCESS\96864-D-6023-R0.DWG
Plotted By: MOORE, STEPHEN Plot Date: Monday, May 05, 2014

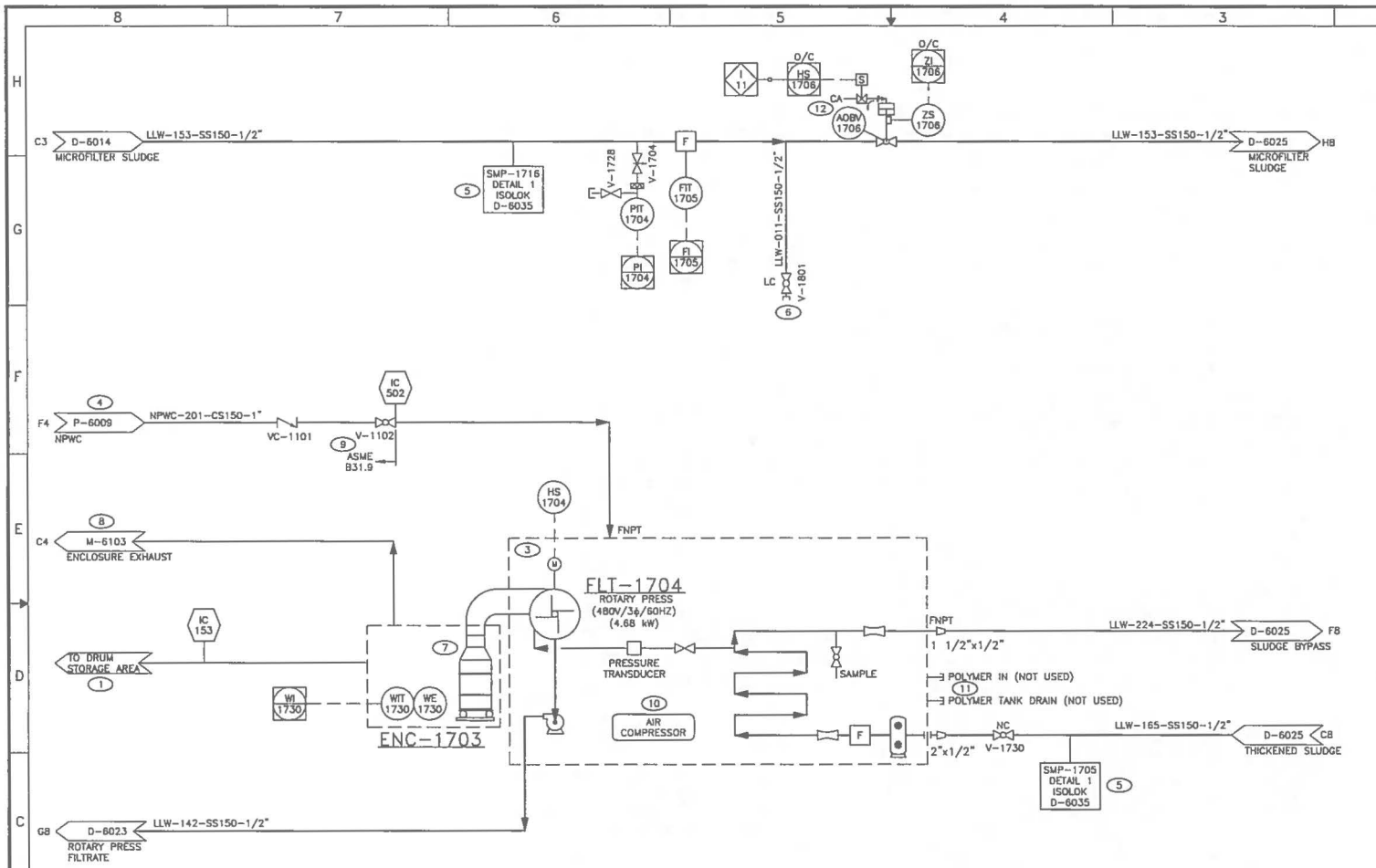

GENERAL NOTES

1. SEE P-6008 FOR COMPRESSED AIR P&ID.
2. ALL VALVES ARE PREFIXED WITH "SEC-1101-" UNLESS OTHERWISE NOTED.
3. ALL PIPING SHALL BE IN ACCORDANCE WITH ASME B31.3 NORMAL FLUID SERVICE UNLESS OTHERWISE NOTED.

INTERLOCKS

I 11 SOFTWARE PROCESS INTERLOCK ON LAH-1716 (SEE SHEET D-6025) CLOSES AOBV-1706.

KEYED NOTES

1. DRUMS PLACED IN DRUM STORAGE AREA PRIOR TO FINAL DISPOSITION.
2. NOT USED.
3. SKID MOUNTED EQUIPMENT BOUNDARY.
4. SEE P-6009 FOR NON-POTABLE WATER P&ID.
5. ALL SAMPLERS HAVE COMPRESSED AIR SUPPLY. SEE D-6035 DIAGRAM 1 OR DIAGRAM 2.
6. CONTINGENCY DISCHARGE NORMALLY LOCKED.
7. BAG CONNECTS TO ROTARY PRESS DISCHARGE CHUTE TO CONTAIN DUST.
8. ENCLOSURE EXHAUST IS FILTERED ON M-6103.
9. VALVES PREFIXED WITH "NPWC-1101-".
10. ROTARY PRESS SKID HAS ON-BOARD AIR COMPRESSOR FOR AIR OPERATED COMPONENTS.
11. ROTARY PRESS IS EQUIPPED FOR POLYMER ADDITION IF REQUIRED. CURRENTLY NOT USED.
12. CA PIPING SHALL BE IN ACCORDANCE WITH ASME B31.3.

"PRIORITY DRAWING"

NO	DATE	CLASS REV	ADC	DESCRIPTION	DWN	DES	CHKD	SUB	APP

AECOM

RLWTF-UP LOW LEVEL WASTE SUBPROJECT

SOLIDS COLLECTION & CONCENTRACTION SYSTEM
ROTARY FILTER P&ID

BLDG. 230 TA-50

DRAWN	V DAVISON
DESIGN	S MOORE
CHECKED	E ROGERS
DATE	5/6/14

SUBMITTED MANNY TARIN

APPROVED FOR RELEASE ED ARTIGLIA

Los Alamos NATIONAL LABORATORY PO Box 1663 Los Alamos, New Mexico 87545

SHEET D-6024

246 OF 434

CLASSIFICATION | REVIEWER | DATE

PROJECT ID 100761 | DRAWING NO C55864 | REV 0

M. EVELYN ROGERS NEW MEXICO 22184 PROFESSIONAL ENGINEER

File Location: P:\RLWTF LOW-LEVEL WASTE FACILITY\000 CAD\C55864 MAIN BUILDING\SHEETS\14 PROCESS\C55864-D-6024-R0.DWG
Plotted By: MOORE, STEVEN Plot Date: Monday, May 05, 2014

: 122297

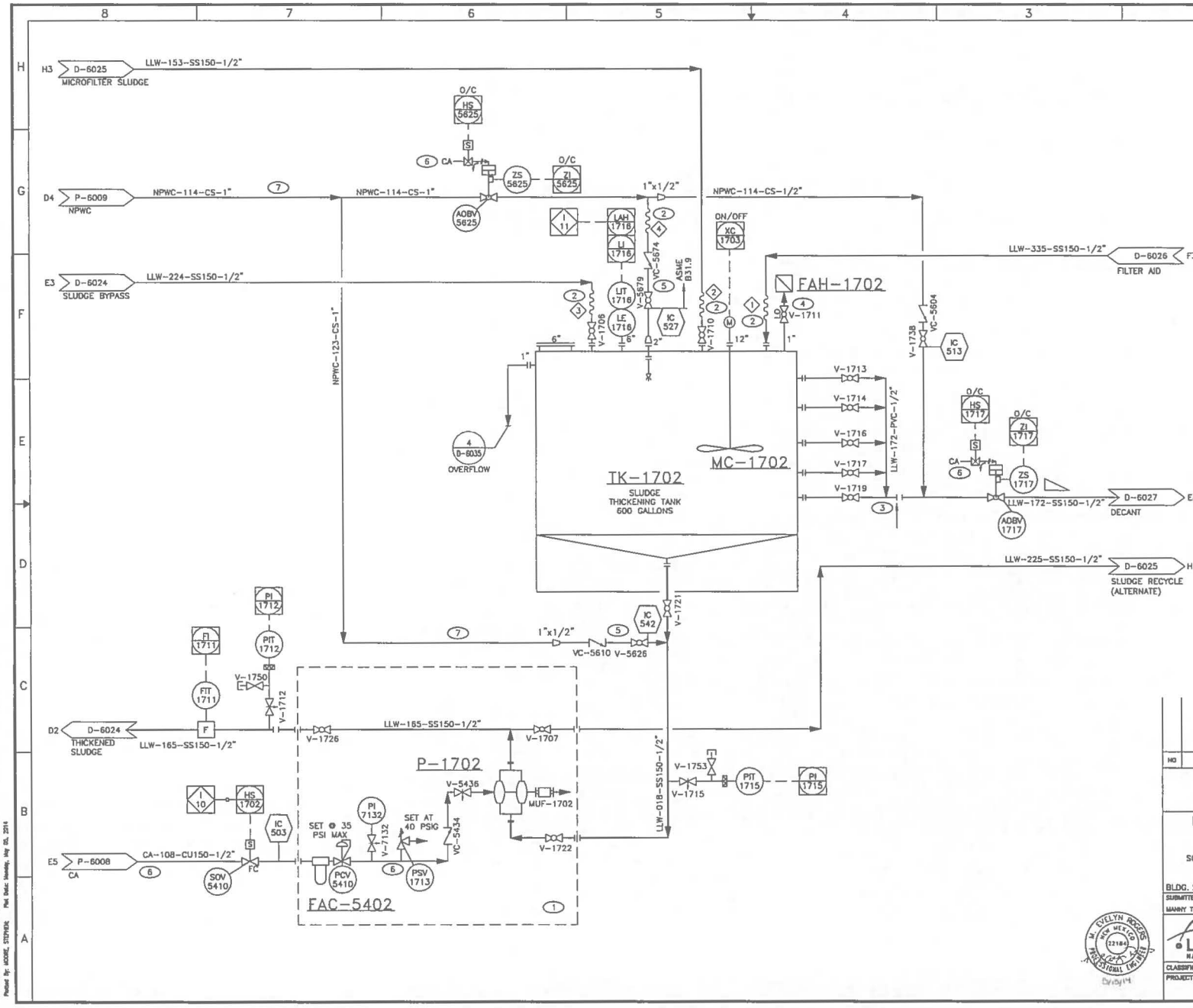

GENERAL NOTES

1. SEE P-6008 FOR COMPRESSED AIR P&ID.
2. ALL VALVES PREFIXED WITH "SEC-1101-" UNLESS OTHERWISE NOTED.
3. ALL PIPING SHALL BE IN ACCORDANCE WITH ASME B31.3 NORMAL FLUID SERVICE UNLESS OTHERWISE NOTED.

INTERLOCKS

I 10 — SOFTWARE PROCESS INTERLOCK ON LAH-1710 (SEE SHEET D-6023) STOPS P-1702 WHEN TK-1707 IS FULL.

I 11 — SOFTWARE PROCESS INTERLOCK ON LAH-1716 CLOSES AOBV-1706 (SEE SHEET D-6024).

KEYED NOTES

1. SKID MOUNTED EQUIPMENT BOUNDARY. PUMP VENDOR WILL INCORPORATE FLEXIBLE COUPLERS ON PUMP AND ISOLATE PUMP VIBRATIONS.
2. SEE HOSE SCHEDULE FOR ASSIGNED NUMBER AND INTERFACING LINE.

FLEX HOSE IDENTIFIER	
1	LLW-335-FH-01
2	LLW-153-FH-01
3	LLW-224-FH-01
4	NPWC-114-FH-01

3. DECANT MANIFOLD SHALL BE MADE OF CLEAR PVC AND TRANSITION TO STAINLESS BEFORE AOBV-1717.
4. SEE SHEET D-6035 DIAGRAM 5 FOR FILTER ASSEMBLY.
5. VALVES PREFIXED WITH "NPWC-1101-".
6. CA PIPING SHALL BE IN ACCORDANCE WITH ASME B31.3.
7. NPWC PIPING SHALL BE IN ACCORDANCE WITH ASME B31.9.

"PRIORITY DRAWING"

NO	DATE	CLASS REV	ADC	DESCRIPTION	DWN	DES	CHKD	SUB	APP

AECOM

RLWTF-UP LOW LEVEL WASTE SUBPROJECT

SOLIDS COLLECTION & CONCENTRATION SYSTEM TK-1702 AND PUMP P&ID

BLDG. 230 TA-50

DRAWN	V DAVISON
DESIGN	S MOORE
CHECKED	E ROGERS
DATE	5/8/14

SUBMITTED MANNY TARIN

APPROVED FOR RELEASE ED ARTIGLIA

Los Alamos NATIONAL LABORATORY PO Box 1663 Los Alamos, New Mexico 87545

SHEET D-6025

247 OF 434

CLASSIFICATION | REVIEWER | DATE

PROJECT ID 100761 | DRAWING NO C55864 | REV 0

M. EVELYN ROGERS NEW MEXICO 22184 PROFESSIONAL ENGINEER

File Location: P:\RLWTF LOW-LEVEL WASTE FACILITY\000 CAD\C55864 MAIN BUILDING\SHEET 8\14 PROCESS\C55864-D-6025-R0.DWG
Plotted By: MOORE, STEPHEN Plot Date: Monday, May 05, 2014

: 12298

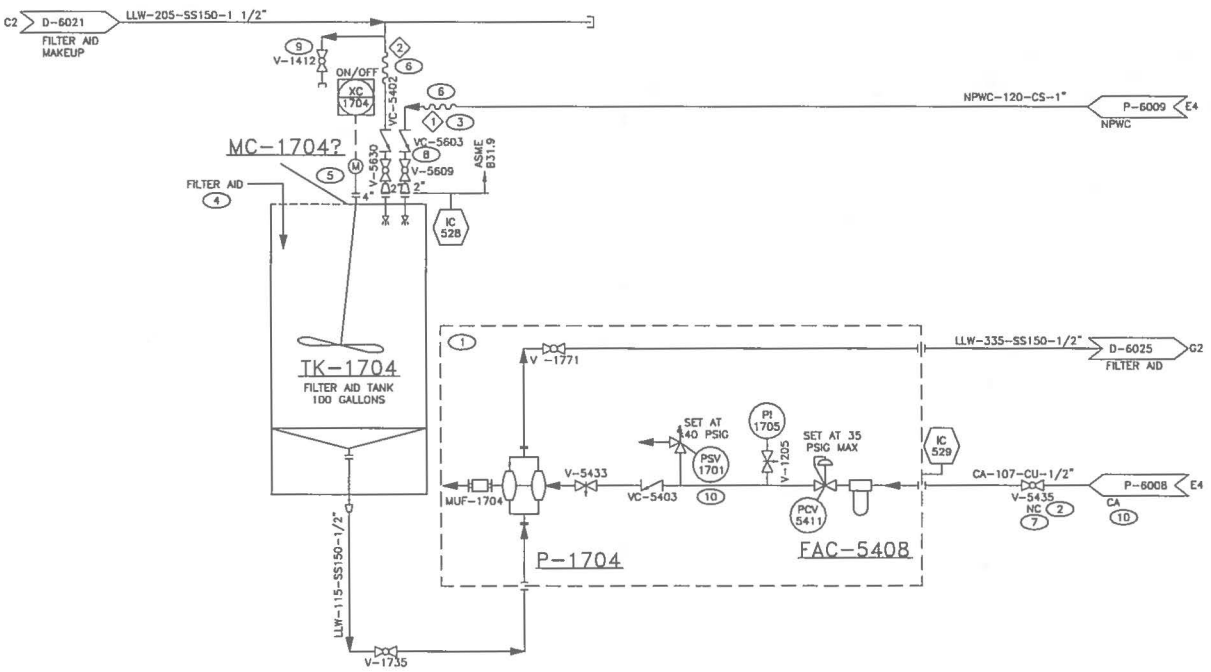

GENERAL NOTES

1. ALL VALVES PREFIXED WITH "SEC-1101-" UNLESS OTHERWISE NOTED.
2. ALL PIPING SHALL BE IN ACCORDANCE WITH ASME B31.3 NORMAL FLUID SERVICE UNLESS OTHERWISE NOTED.

KEYED NOTES

(1) SKID MOUNTED EQUIPMENT BOUNDARY. PUMP VENDOR WILL INCORPORATE FLEXIBLE COUPLERS ON PUMP AND ISOLATE PUMP VIBRATIONS.

(2) OPERATE VALVE TO OPERATE PUMP.

(3) SPRAYER USED AS NEEDED FOR LIDDED TANK.

(4) FILTER AID ADDED THROUGH LIDDED TANK TOP.

(5) HALF OPEN TANK WITH HINGED LID.

(6) SEE HOSE SCHEDULE FOR ASSIGNED NUMBER AND INTERFACING LINE.

FLEX HOSE IDENTIFIER	
1	NPWC-120-FH-01
2	LLW-205-FH-01

(7) VALVE PREFIXED WITH "CA-1101-".

(8) VALVE PREFIXED WITH "NPWC-1101-".

(9) WATER REUSE LINE PROVIDES TWO LOCATIONS TO FILL PORTABLE CONTAINERS TO USE AROUND PROCESS AREA FOR FLUSHING.

(10) CA PIPING SHALL BE IN ACCORDANCE WITH ASME B31.3.

"PRIORITY DRAWING"

NO	DATE	CLASS REV	ADC	DESCRIPTION	DWN	DES	CHKD	SUB	APP

AECOM

RLWTF-UP LOW LEVEL WASTE SUBPROJECT

SOLIDS COLLECTION & CONCENTRATION SYSTEM
TK-1704 AND PUMP P&ID

BLDG. 230 TA-50

DRAWN	V DAVISON
DESIGN	S MOORE
CHECKED	E ROGERS
DATE	5/8/14

SUBMITTED: MANNY TARIN — APPROVED FOR RELEASE: ED ARTIGLIA

Los Alamos NATIONAL LABORATORY — PO Box 1663, Los Alamos, New Mexico 87545

SHEET: D-6026
248 OF 434

CLASSIFICATION | REVIEWER | DATE

PROJECT ID: 100761 | DRAWING NO: C55864 | REV: 0

M. EVELYN ROGERS — NEW MEXICO — 22180 — PROFESSIONAL ENGINEER

5/8/14

66271 :

File Location: P:\RLWTF LOW-LEVEL WASTE FACILITY\100 CAD\C55864 MAIN BUILDING\SHEETS\14 PROCESS\55864-D-6026-R0.DWG
Plotted By: MOORE, STEPHEN Plot Date: Monday, May 05, 2014

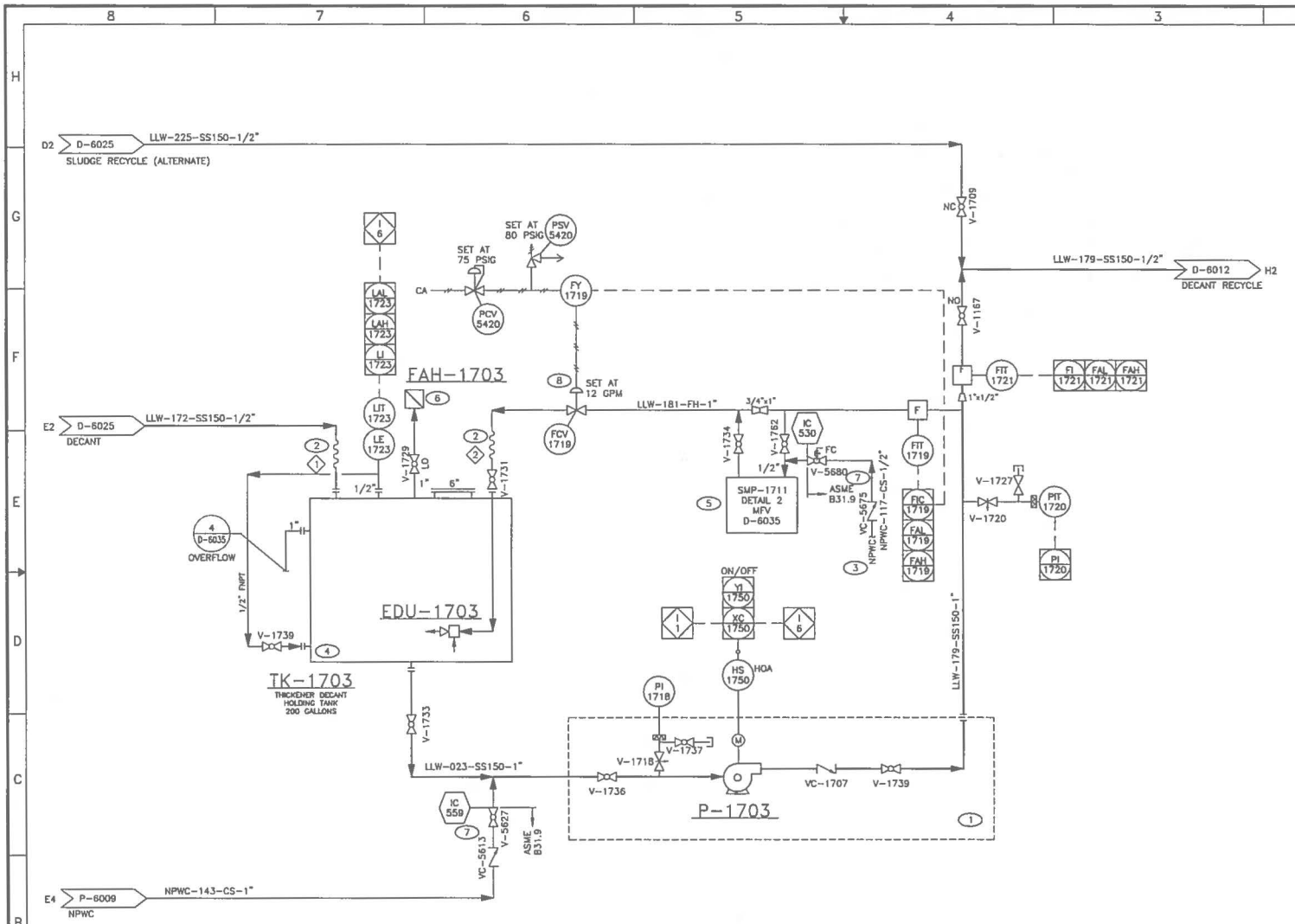

GENERAL NOTES

1. ALL VALVES PREFIXED WITH "SEC-1101-" UNLESS OTHERWISE NOTED.
2. ALL PIPING SHALL BE IN ACCORDANCE WITH ASME B31.3 NORMAL FLUID SERVICE UNLESS OTHERWISE NOTED.

INTERLOCKS

(I 1) SOFTWARE PROCESS INTERLOCK ON LAHH-1123 (SEE SHEET D-6012) STOPS PUMP P-1703.

(I 6) SOFTWARE PROCESS INTERLOCK ON LAL-1723 STOPS PUMP P-1703.

KEYED NOTES

(1) SKID MOUNTED EQUIPMENT BOUNDARY. PUMP VENDOR WILL INCORPORATE FLEXIBLE COUPLERS ON PUMP AND ISOLATE PUMP VIBRATIONS.

(2) SEE FLEX HOSE SCHEDULE FOR ASSIGNED NUMBER AND INTERFACING LINE.

FLEX HOSE IDENTIFIER	
1	LLW-172-FH-01
2	LLW-181-FH-01

(3) P-6009 FOR NON-POTABLE WATER P&ID.

(4) TK-1703 IS HORIZONTAL TANK THAT IS SLOPED TO FACILITATE CLEANOUT.

(5) ALL SAMPLERS HAVE COMPRESSED AIR SUPPLY. SEE D-6035 DIAGRAM 1 OR DIAGRAM 2.

(6) SEE SHEET D-6035 DIAGRAM FOR FILTER ASSEMBLY.

(7) VALVES PREFIXED WITH "NPWC-1101-".

(8) CA PIPING SHALL BE IN ACCORDANCE WITH ASME B31.3.

"PRIORITY DRAWING"

NO	DATE	CLASS REV	ADC	DESCRIPTION	DWN	DES	CHKD	SUB	APP

AECOM

RLWTF-UP LOW LEVEL WASTE SUBPROJECT

SOLIDS COLLECTION & CONCENTRATION SYSTEM
TK-1703 AND PUMP P&ID

DRAWN	V DAVISON
DESIGN	S MOORE
CHECKED	E ROGERS
DATE	5/8/14

BLDG. 230 TA-50

SUBMITTED MANNY TARIN — APPROVED FOR RELEASE ED ARTIGLIA

Los Alamos NATIONAL LABORATORY PO Box 1663 Los Alamos, New Mexico 87545

SHEET D-6027
249 OF 434

CLASSIFICATION | REVIEWER | DATE

PROJECT ID 100761 | DRAWING NO C55864 | REV 0

EVELYN ROGERS NEW MEXICO 12184 PROFESSIONAL ENGINEER 5/15/14

C55864 1

File Location: P:\RLWTF LOW-LEVEL WASTE FACILITY\DGN CADD\55864 MAIN BUILDING\SHEET\B14 PROCESS\55864-D-6027-R0.DWG
Plotted By: MOORE, STEPHEN Plot Date: Monday, May 05, 2014

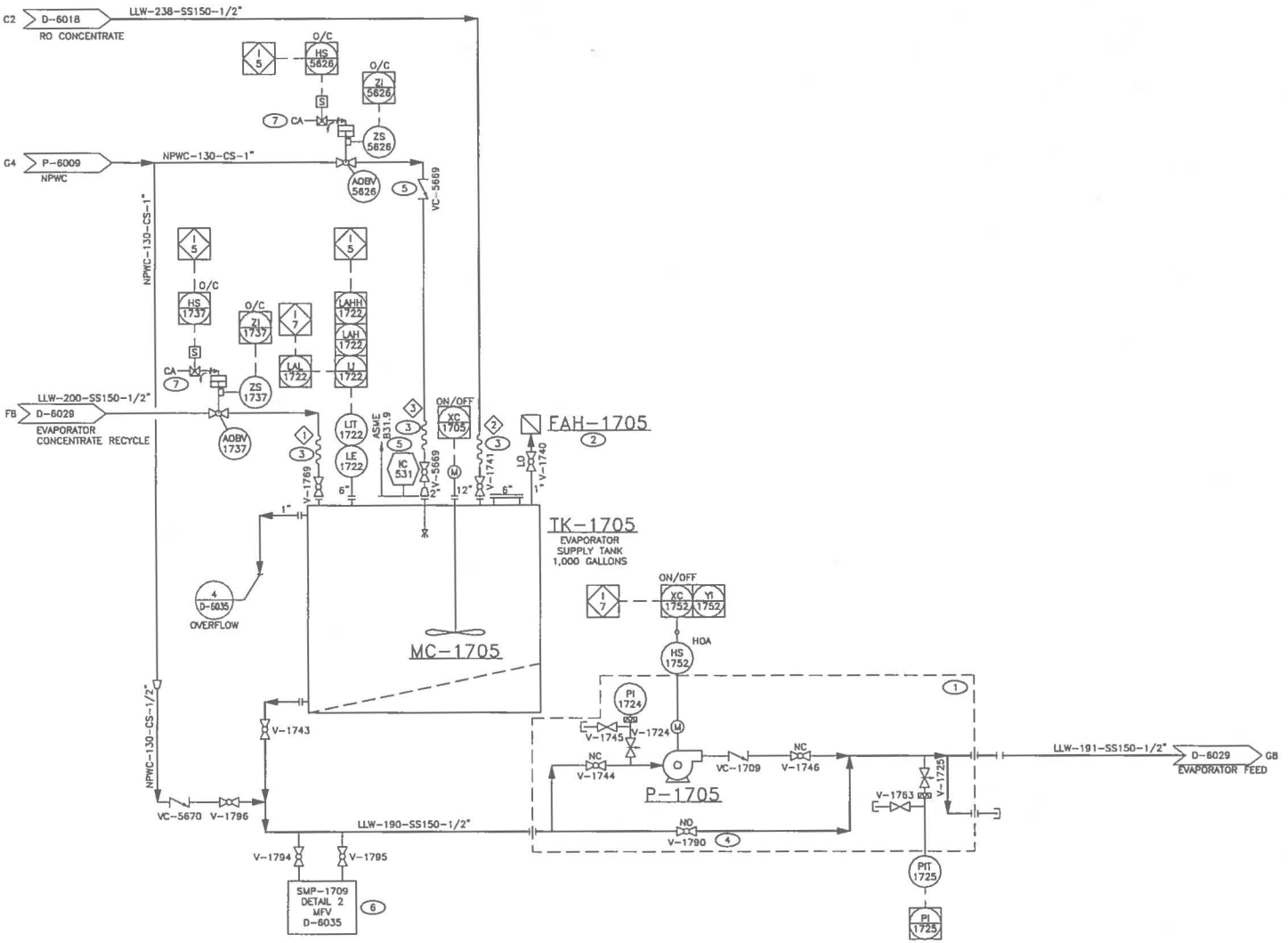

GENERAL NOTES

1. SEE P-6008 FOR COMPRESSED AIR P&ID.
2. ALL VALVES PREFIXED WITH "SEC-1101-" UNLESS OTHERWISE NOTED.
3. ALL PIPING SHALL BE IN ACCORDANCE WITH ASME B31.3 NORMAL FLUID SERVICE UNLESS OTHERWISE NOTED.

INTERLOCKS

I 5 — SOFTWARE PROCESS INTERLOCK ON LAHH-1722 CLOSES AOBV-5626 AND AOBV-1737 (THIS SHEET) AND CLOSES AOBV-1323 (SEE SHEET D-6018).

I 7 — SOFTWARE PROCESS INTERLOCK ON LAL-1722 STOPS PUMP P-1705 (THIS SHEET) AND EVAP 1701/1702 (SEE SHEET D-6029).

KEYED NOTES

1. SKID MOUNTED EQUIPMENT BOUNDARY. PUMP VENDOR WILL INCORPORATE FLEXIBLE COUPLERS ON PUMP AND ISOLATE PUMP VIBRATIONS.
2. SEE SHEET D-6035 DIAGRAM 5 FOR FILTER ASSEMBLY.
3. SEE FLEX HOSE SCHEDULE FOR ASSIGNED NUMBER AND INTERFACING LINE.

FLEX HOSE IDENTIFIER	
1	LLW-200-FH-01
2	LLW-238-FH-01
3	NPWC-116-FH-01

4. NORMAL ROUTING IS THROUGH V-1790 WHEN EVAP-1702 (D-6029) IS OPERATIONAL UNDER VACUUM. P-1705 IS ONLY USED FOR PRE-FILLING THE EVAPORATOR.
5. VALVES PREFIXED WITH "NPWC-1101-".
6. ALL SAMPLES HAVE COMPRESSED AIR SUPPLY. SEE D-6035 DIAGRAM 1 OR DIAGRAM 2.
7. CA PIPING SHALL BE IN ACCORDANCE WITH ASME B31.3.

"PRIORITY DRAWING"

NO	DATE	CLASS REV	ADC	DESCRIPTION	DWN	DES	CHKD	SUB	APP

AECOM

RLWTF-UP LOW LEVEL WASTE SUBPROJECT

DE-WATERING SYSTEM
TK-1705 AND PUMP P&ID

BLDG. 230 TA-50

DRAWN	V DAVISON
DESIGN	S MOORE
CHECKED	E ROGERS
DATE	5/8/14

SUBMITTED: MANNY TAPIN
APPROVED FOR RELEASE: ED ARTIGLIA

Los Alamos NATIONAL LABORATORY PO Box 1663 Los Alamos, New Mexico 87545

SHEET D-6028
250 OF 434

CLASSIFICATION | REVIEWER | DATE

PROJECT ID 100761 | DRAWING NO C55864 | REV 0

M. EVELYN ROGERS NEW MEXICO 22184 PROFESSIONAL ENGINEER
5/15/14

File Location: P:\RLWTF LOW-LEVEL WASTE FACILITY\000 CAD\C55864 MAIN BUILDING\SHEETS\14 PROCESS\C55864-D-6028-RO DWG
Plotted By: MOORE, STEPHEN Plot Date: Monday, May 05, 2014

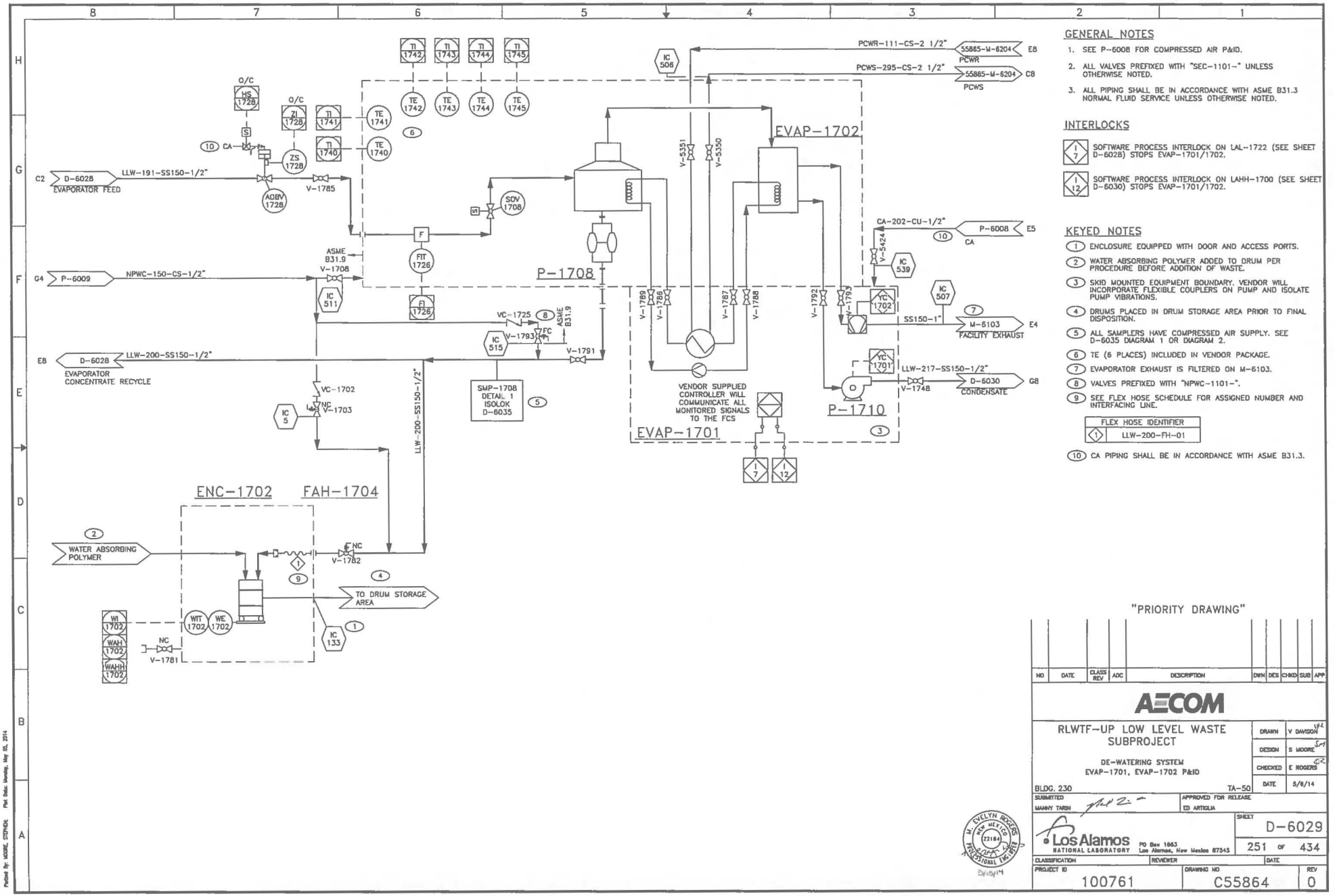

GENERAL NOTES

1. SEE P-6008 FOR COMPRESSED AIR P&ID.
2. ALL VALVES PREFIXED WITH "SEC-1101-" UNLESS OTHERWISE NOTED.
3. ALL PIPING SHALL BE IN ACCORDANCE WITH ASME B31.3 NORMAL FLUID SERVICE UNLESS OTHERWISE NOTED.

INTERLOCKS

- I/7 — SOFTWARE PROCESS INTERLOCK ON LAL-1722 (SEE SHEET D-6028) STOPS EVAP-1701/1702.
- I/12 — SOFTWARE PROCESS INTERLOCK ON LAHH-1700 (SEE SHEET D-6030) STOPS EVAP-1701/1702.

KEYED NOTES

1. ENCLOSURE EQUIPPED WITH DOOR AND ACCESS PORTS.
2. WATER ABSORBING POLYMER ADDED TO DRUM PER PROCEDURE BEFORE ADDITION OF WASTE.
3. SKID MOUNTED EQUIPMENT BOUNDARY. VENDOR WILL INCORPORATE FLEXIBLE COUPLERS ON PUMP AND ISOLATE PUMP VIBRATIONS.
4. DRUMS PLACED IN DRUM STORAGE AREA PRIOR TO FINAL DISPOSITION.
5. ALL SAMPLERS HAVE COMPRESSED AIR SUPPLY. SEE D-6035 DIAGRAM 1 OR DIAGRAM 2.
6. TE (6 PLACES) INCLUDED IN VENDOR PACKAGE.
7. EVAPORATOR EXHAUST IS FILTERED ON M-6103.
8. VALVES PREFIXED WITH "NPWC-1101-".
9. SEE FLEX HOSE SCHEDULE FOR ASSIGNED NUMBER AND INTERFACING LINE.

FLEX HOSE IDENTIFIER
1 — LLW-200-FH-01

10. CA PIPING SHALL BE IN ACCORDANCE WITH ASME B31.3.

"PRIORITY DRAWING"

NO	DATE	CLASS REV	ADC	DESCRIPTION	DWN	DES	CHKD	SUB	APP

AECOM

RLWTF-UP LOW LEVEL WASTE SUBPROJECT

DE-WATERING SYSTEM
EVAP-1701, EVAP-1702 P&ID

BLDG. 230 TA-50

DRAWN	V DAVISON
DESIGN	S MOORE
CHECKED	E ROGERS
DATE	5/8/14

SUBMITTED: MANNY TARIN
APPROVED FOR RELEASE: ED ARTIGLIA

Los Alamos NATIONAL LABORATORY — PO Box 1663, Los Alamos, New Mexico 87545

SHEET D-6029
251 OF 434

CLASSIFICATION | REVIEWER | DATE

PROJECT ID 100761 | DRAWING NO C55864 | REV 0

M. EVELYN ROGERS — NEW MEXICO — 22184 — REGISTERED PROFESSIONAL ENGINEER

20627 :

File Location: P:\RLWTF LOW-LEVEL WASTE FACILITY\DD CAD\C55864 MAIN BUILDING\SHEET\1414 PROCESS\D6029-D-6029-RD.DWG
Plotted By: MOORE, STEPHEN Plot Date: Monday, May 05, 2014

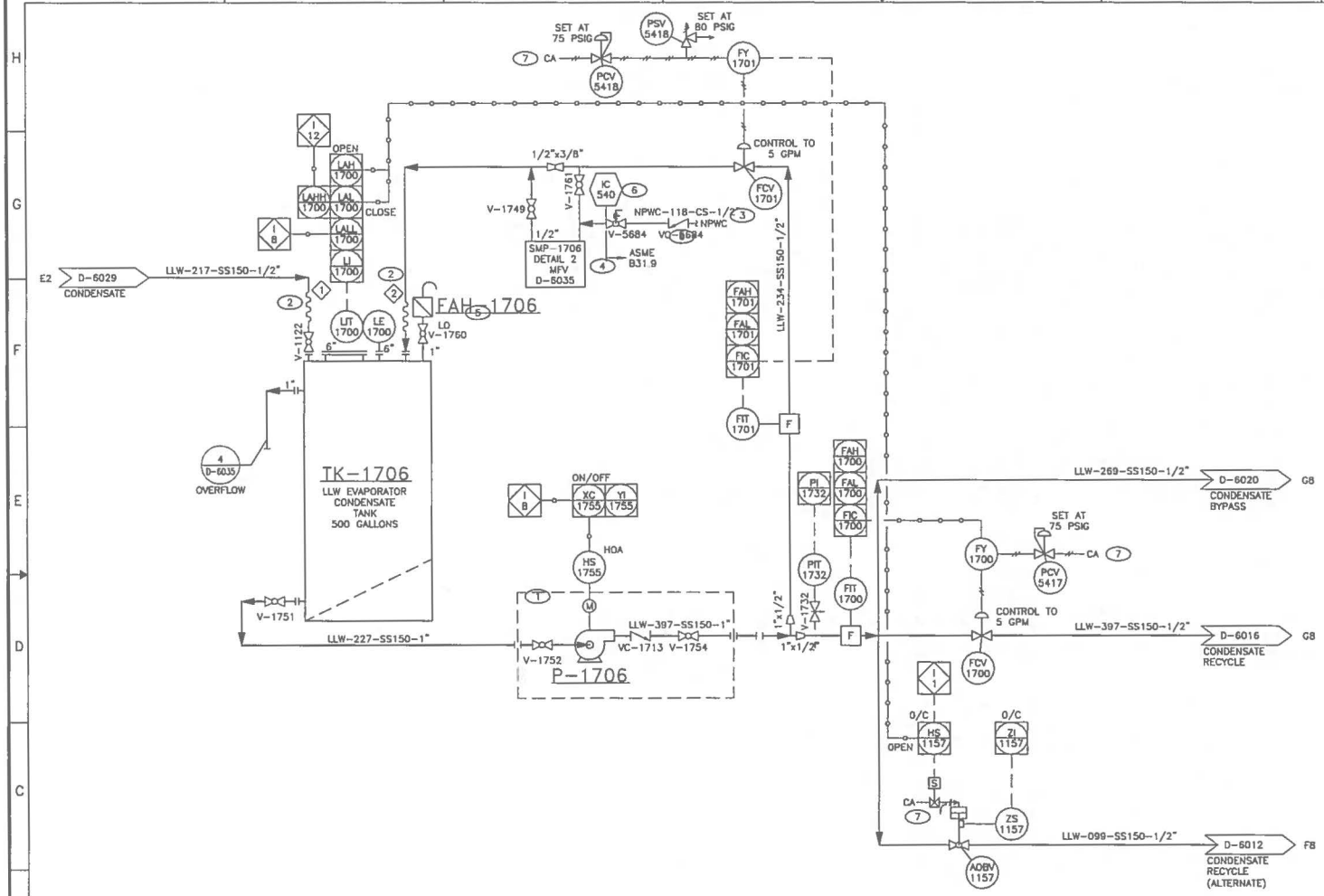

GENERAL NOTES

1. SEE P-6008 FOR COMPRESSED AIR P&ID.
2. ALL VALVES PREFIXED WITH "SEC-1101-" UNLESS OTHERWISE NOTED.
3. ALL PIPING SHALL BE IN ACCORDANCE WITH ASME B31.3 NORMAL FLUID SERVICE UNLESS OTHERWISE NOTED.

INTERLOCKS

- I 1 — SOFTWARE PROCESS INTERLOCK ON LAHH-1123 (SEE SHEET D-6012) CLOSES AOBV-1157.
- I 8 — SOFTWARE PROCESS INTERLOCK ON LALL-1700 TO STOP P-1706.
- I 12 — SOFTWARE PROCESS INTERLOCK ON LAHH-1700 STOPS EVAP-1701/1702 (SEE SHEET D-6029).

KEYED NOTES

1. SKID MOUNTED EQUIPMENT BOUNDARY. PUMP VENDOR WILL INCORPORATE FLEXIBLE COUPLERS ON PUMP AND ISOLATE PUMP VIBRATIONS.
2. SEE FLEX HOSE SCHEDULE FOR ASSIGNED NUMBER AND INTERFACING LINE.

FLEX HOSE IDENTIFIER	
1	LLW-217-FH-01
2	LLW-234-FH-01

3. SEE P-6009 FOR NON-POTABLE WATER P&ID.
4. ALL SAMPLERS HAVE COMPRESSED AIR SUPPLY. SEE D-6035 DIAGRAM 1 OR DIAGRAM 2.
5. SEE SHEET D-6035 DIAGRAM 5 FOR FILTER.
6. VALVES PREFIXED WITH "NPWC-1101-".
7. CA PIPING SHALL BE IN ACCORDANCE WITH ASME B31.3.

"PRIORITY DRAWING"

NO	DATE	CLASS REV	ADC	DESCRIPTION	DWN	DES	CHKD	SUB	APP

AECOM

RLWTF-UP LOW LEVEL WASTE SUBPROJECT

DE-WATERING SYSTEM
TK-1706 AND PUMP P&ID

BLDG. 230 TA-50

DRAWN	V DAVISON
DESIGN	S MOORE
CHECKED	E ROGERS
DATE	5/8/14

SUBMITTED: MANNY TARIN
APPROVED FOR RELEASE: ED ARTIGLIA

Los Alamos NATIONAL LABORATORY — PO Box 1663, Los Alamos, New Mexico 87545

SHEET D-6030
252 OF 434

CLASSIFICATION | REVIEWER | DATE

PROJECT ID 100761 | DRAWING NO C55864 | REV 0

M. EVELYN ROGERS, NEW MEXICO, 22184, PROFESSIONAL ENGINEER
5/8/14

File Location: P:\RLWTF LOW-LEVEL WASTE FACILITY\000 CAD\C55864 MAIN BUILD\NO\SHEETS\14 PROCESS\C55864-D-6030-RD.DWG
Plotted By: MOORE, STEPHEN Plot Date: Monday, May 05, 2014

123603

SEQUENCE OF OPERATIONS

PROCESS SYSTEM

THE PROCESS SYSTEM IS A COMBINATION OF SEMI-CONTINUOUS AND BATCH OPERATIONS TO TREAT LOW-LEVEL WASTE (LLW) RECEIVED FROM THE RADIOACTIVE LIQUID WASTE COLLECTION SYSTEM (RLWCS). THE SYSTEM WILL NORMALLY OPERATE 36 WEEKS PER YEAR, 4 DAYS PER WEEK (= 145 DAYS PER YEAR BASED ON THE LANL CALENDAR), AND 6 TREATMENT HOURS/DAY.

THERE ARE FIVE PRIMARY SYSTEMS ALONG WITH ADDITIONAL SUBSYSTEMS:

- LOW-LEVEL WASTE MAIN TREATMENT PROCESS SYSTEM (MTPS)
  - INFLUENT FILTER SYSTEM
  - REACTION/PRECIPITATION SYSTEM
  - MICROFILTRATION SYSTEM
  - REVERSE OSMOSIS SYSTEM
  - POLISHING SYSTEM
- LOW-LEVEL WASTE SECONDARY WASTE TREATMENT AND PACKAGING SYSTEM (SWTPS)
  - DE-WATERING SYSTEM (EVAPORATOR)
  - SOLIDS COLLECTION & CONCENTRATION SYSTEM
- TREATED EFFLUENT SYSTEM
- CHEMICAL DOSING SYSTEM
- SAMPLE COLLECTION SYSTEM

AS REQUIRED, SOME OF THE UNIT OPERATIONS CAN BE OPERATED INDEPENDENT OF EACH OTHER IN RESPONSE TO PLANT CONDITIONS. THE SYSTEM IS CONTROLLED BY THE MANUAL AND AUTOMATIC OPERATOR ACTIONS THOUGH THE FACILITY CONTROL SYSTEM (FCS).

PROVIDE SEQUENTIAL START FOR ALL EQUIPMENT. APPROPRIATE TIME DELAYS TO BE IMPLEMENTED BY THE FCS TO ALLOW EQUIPMENT TO START WITHOUT OVERLAPPING INRUSH CURRENTS.

LLW MTPS

1. INFLUENT FILTER SYSTEM (D-6010)

RUN CONDITIONS – INTERLOCKS:

I-1 SOFTWARE PROCESS INTERLOCK ON LAHH-1123 (TK-1101); CLOSES VALVES AOBV-1103 AND STOPS INFLUENT FEED PUMPS P-01 AND P-02 LOCATED AT TA-50-250.

RUN CONDITIONS:

VERIFY AVAILABLE SPACE IN TK-1101 (LI-1123), START P-01 OR P-02.

INFLUENT FILTER SYSTEM OPERATION:

LLW WATER IS PUMPED FROM THE INFLUENT STORAGE FACILITY. THE PUMPS P-01 AND P-02 ARE STARTED AFTER VALVES ARE ALIGNED AND POSITIONS ARE CONFIRMED. THE PUMPS OPERATED IN A LEAD/STANDBY FASHION. THE DESIGNATED LEAD PUMP SHALL ROTATE UPON ONE OF THE FOLLOWING CONDITIONS (USER SELECTABLE):

- MANUALLY THROUGH A SOFTWARE SWITCH
- IF PUMP RUNTIME (ADJ.) IS EXCEEDED
- DAILY
- WEEKLY
- MONTHLY

THE PUMP FLOW IS NOMINALLY CONTROLLED (FIC-1102) TO 50 GPM IN A SEMI-CONTINUOUS PATTERN FOR THE 6-HOUR OPERATING DURATION, BASED ON THE FLUID LEVEL OF TANK TK-1101. AS SOLID MATERIAL ACCUMULATES ON THE ROUGH FILTER (FLT-1101), IT IS CLEANED DAILY BY AN ELECTRONIC TIMER THAT ACTUATES A MAGNETIC CLEANING DISK, WHICH MOVES DOWN THE SCREEN MEDIA. SAMPLES OF THE FILTRATE OUT OF THE ROUGH FILTER SHALL BE TAKEN PER THE SAMPLING PLAN.

ALARMS SHALL BE PROVIDED AS FOLLOWS:

- INFLUENT PUMP (P-01 AND P-02)
  - LOW FLOW (FAL-1131 AND FAL-1132), LESS THAN 25 GPM WHEN OPERATING
- ROUGHING FILTER (FLT-1101)
  - HIGH PRESSURE DIFFERENTIAL (PDAH-1104), GREATER THAN 15 PSID

THE ROUGHING FILTER MANUAL PURGE VALVE IS OPERATED AT THE END OF EACH WEEK'S PROCESS OPERATION TO REMOVE ACCUMULATED SOLIDS AT THE BOTTOM OF FLT-1101. THE PURGE REQUIRES SYSTEM PRESSURE TO PURGE OUT THE SLUDGE AND PROCESS WATER. PRIOR TO THIS, A BAGGED DRUM CHARGED WITH ABSORBENT POLYMER IS LOADED INTO THE DRUMMING ENCLOSURE (ENC-1701). WHEN THE DESIGNATED DRUM WEIGHT IS REACHED ALLOW 30 MINUTES TO ENSURE THE POLYMER HAS ABSORBED ALL OF THE FREE LIQUID, DISCONNECT FILL AND VENT LINES, LID THE DRUM, AND REMOVE FROM THE ENCLOSURE. A NEW BAGGED DRUM CHARGED WITH ABSORBENT IS ADDED BACK IN THE ENCLOSURE.

ALARMS SHALL BE PROVIDED AS FOLLOWS:

- DRUMS
  - HIGH WEIGHT ALARM (WAH-1701)
  - HIGH-HIGH WEIGHT ALARM (WAHH-1701)

2. REACTION/PRECIPITATION SYSTEM (D-6011 & D-6012)

RUN CONDITIONS – INTERLOCKS:

I-1 SOFTWARE PROCESS INTERLOCK ON LAHH-1123 (TK-1101) STOPS PUMP P-4003 AND CLOSES VALVES AOBV-5622, AOBV-1115, AOBV-1324, AOBV-1708, AOBV-1157, STOPS PUMP P-1703, CLOSES AOBV-1103 AND STOPS P-01 AND P-02 IN THE INFLUENT STORAGE FACILITY. STOP PS-5700.

I-2 SOFTWARE PROCESS INTERLOCK ON LAHH-1125 (TK-1102) CLOSES VALVE AOBV-1126 AND STOPS P-1701.

RUN CONDITIONS:

START P-1701 AFTER STARTING MICROFILTER.

REACTION/PRECIPITATION SYSTEM OPERATION:

THE ROUGHING FILTER FILTRATE PASSES THROUGH AN IN-LINE MIXER AND IS DOSED WITH MAGNESIUM SULFATE AND FERRIC SULFATE. THE DOSING RATE IS PROPORTIONAL TO FILTRATE FLOW RATE, 25 WT% MAGNESIUM SULFATE (0.00046 GAL PER GAL OF FILTRATE) AND 36 WT% FERRIC SULFATE (0.00020 GAL PER GAL OF FILTRATE). THE DOSED FILTRATE THEN FEEDS TO THE 1,000-GALLON LLW REACTION TANK, TK-1101. ADDITIONALLY, TK-1101 RECEIVES CONTINUOUS REVERSE-OSMOSIS CONCENTRATE RECYCLE AND SLUDGE THICKENING TANK, TK-1702, DECANT AND ROTARY PRESS, FLT-1704, FILTRATE DURING SECONDARY SOLIDS HANDLING OPERATIONS. THE PH OF THE WASTEWATER IN TK-1101 IS ADJUSTED TO 10.8 WITH THE ADDITION OF 25 WT % SODIUM HYDROXIDE FROM THE CHEMICAL DOSING SYSTEM. DOSING IS CONTROLLED BY A TANK PH ELEMENT (AE-1100) AND TRANSMITTER (AIT-1100). THE DOSED INFLUENT, PROCESS RECYCLES AND CHEMICALS ARE COMPLETELY MIXED VIA THE TANK MIXER, MC-1101.

A RESIDENCE TIME OF 15 MINUTES IS REQUIRED IN TK-1101 TO MAXIMIZE PRECIPITATION REACTIONS. THEREFORE, THE MINIMUM VOLUME OF LIQUID IN THE TANK IS 550 GALLONS. WHEN THIS LOW POINT IS REACHED, THE INFLUENT IS PUMPED IN SEMI-CONTINUOUSLY AT 50 GPM UNTIL THE TANK LEVEL REACHES 950 GALLONS AND THE INFLUENT PUMP IS STOPPED.

THE DISCHARGE FROM TK-1101 TO REACTION TANK #2, TK-1102, IS CONTINUOUS. LEVEL TRANSMITTER (LIT-1125) WILL MODULATE LCV-1123 TO MAINTAIN A CONSTANT LEVEL IN TK-1102.

ALARMS SHALL BE PROVIDED AS FOLLOWS:

- REACTION TANK (TK-1101)
  - HIGH LEVEL (LAH-1123), 950 GALLONS
  - HIGH HIGH LEVEL (LAHH-1123), 1,000 GALLONS

3. MICROFILTRATION SYSTEM (D-6013 to D-6015)

RUN CONDITIONS – INTERLOCKS:

I-2 SOFTWARE PROCESS INTERLOCK ON LAHH-1125 (TK-1102) CLOSES VALVE AOBV-5623, AOBV-1126 AND STOPS P-1701.

RUN CONDITIONS:

CONFIRM AVAILABLE LEVEL IN TK-1102 (LI-1124), START MICROFILTER.

MICROFILTRATION SYSTEM OPERATION:

WASTEWATER/SUSPENDED SOLIDS SLURRY IS PUMPED (P-1201) FROM TK-1102 AT APPROXIMATELY 316 GPM TO THE MICROFILTER. MICROFILTER FILTRATE IS TRANSFERRED AT 31.6 GPM TO THE REVERSE-OSMOSIS PH ADJUSTMENT TANK, TK-1301. MICROFILTER CONCENTRATE RECYCLES BACK TO TK-1102 AT 284 GPM. THERE IS AN LSLL AND LC PROVIDED WITH THE MICROFILTER THAT PREVENTS THE ON-BOARD PUMP (P-1201) FROM RUNNING DRY. WHEN THE SOLIDS CONCENTRATION IN TK-1102 REACHES 5%, SMALL VOLUMES OF SLUDGE ARE PUMPED AT 5 GPM TO THE SLUDGE THICKENING TANK, TK-1702, INTERMITTENTLY. SOLIDS CONTENT IN TK-1102 IS MONITORED WITH THE SAMPLES TAKEN AT SMP-1212. SAMPLES SHALL BE TAKEN PER THE SAMPLING PLAN.

AFTER EACH OPERATING SHIFT, FLUSH THE SLUDGE THICKENING LINE (LLW-153) WITH 60 GALLONS OF NON-POTABLE WATER. THE FLUSH WATER IS INTRODUCED BY OPERATION AOBV-5627 AND OBSERVING THE FLOW ON FI-1705. THIS FEED WILL BE MONITORED AND CONTROLLED BY THE TK-1702 LEVEL TRANSMITTER (LIT-1716).

ALARMS (NOT INCLUDING VENDOR PACKAGE ALARMS AND SAFETIES) SHALL BE PROVIDED AS FOLLOWS:

- CLEAN-IN-PLACE TANK (TAC-4200 AND TAC-4201)
  - HIGH LEVEL (LAH-4200 AND LAH-4201), 100 GALLONS

4. REVERSE OSMOSIS SYSTEM (D-6016 to D-6020)

RUN CONDITIONS – INTERLOCKS:

I-1 SOFTWARE PROCESS INTERLOCK ON LAH-1123 (TK-1101) CLOSES VALVE AOBV-1324.

I-3 SOFTWARE PROCESS INTERLOCK ON LAHH-1302 (TK-1301) STOPS P-4006 AND P-4007, CLOSES AOBV-1304 AND CLOSES AOBV-1214.

I-4 SOFTWARE PROCESS INTERLOCK ON LAHH-1344 (TK-1304) CLOSES VALVE AOBV-1331 AND AOBV-1340.

I-5 SOFTWARE PROCESS INTERLOCK ON LAHH-1722 (TK-1705) CLOSES VALVE AOBV-1323.

I-9 SOFTWARE PROCESS INTERLOCK ON LAH-4302 (TAC-4302) CLOSES AOBV-5624.

(TO BE CONTINUED ON D-6032)

NO	DATE	CLASS REV	ADC	DESCRIPTION	DWN	DES	CHKD	SUB	APP

AECOM

RLWTF-UP LOW LEVEL WASTE SUBPROJECT

PROCESS SYSTEM SEQUENCE OF OPERATIONS

DRAWN	V DAVISON
DESIGN	S MOORE
CHECKED	E ROGERS
DATE	5/8/14

BLDG. 230 TA-50

SUBMITTED MANNY TARIN — APPROVED FOR RELEASE ED ARTIGLIA

Los Alamos NATIONAL LABORATORY PO Box 1663 Los Alamos, New Mexico 87545

SHEET D-6031

253 OF 434

CLASSIFICATION | REVIEWER | DATE

PROJECT ID 100761 | DRAWING NO C55864 | REV 0

M. EVELYN ROGERS NEW MEXICO 22184 PROFESSIONAL ENGINEER

5/8/14

File Location: P:\RLWTF LOW-LEVEL WASTE FACILITY\500 CAD\C55864 MAIN BUILDING\SHEETS\14 PROCESS\55864-D-6031-R0.DWG
Plotted By: DAVISON, VANESSA; Plot Date: Monday, May 12, 2014

1627

SEQUENCE OF OPERATIONS (CONTINUED FROM D-6031)

RUN CONDITIONS:

CONFIRM OPERATION OF MICROFILTER (PI-1211 AND PI-1218) AND AVAILABLE LEVEL IN TK-1301 (LI-1302) AND TK-1304 (LI-1344), START P-1302 AND RO UNIT.

REVERSE OSMOSIS SYSTEM OPERATION:

THE MICROFILTER FILTRATE IS PH ADJUSTED WITH 93 WT% SULFURIC ACID IN TK-1301 FROM PH 10.8 TO BETWEEN 6.5 AND 7.5. 25 WT% SODIUM HYDROXIDE IS ALSO PROVIDED FOR ADDITIONAL PH ADJUSTMENT, IF REQUIRED. CHEMICAL CONDITIONS ARE CONTROLLED BY AIC-1301 AND PUMPED INTO THE TANK AT 0.1 GPM. FLOW CONTROL VALVE FCV-1315 IS MODULATED TO MAINTAIN A FLOW TO THE REVERSE-OSMOSIS UNIT AT A RATE THAT MATCHES THE MICROFILTER FILTRATE, THROUGH FI-1206. AN ADDITIONAL 5 GPM WILL BE RECYCLED BACK TO TK-1301. RECYCLE SAMPLES SHALL BE TAKEN AT SMP-1306 PER THE SAMPLING PLAN. APPROXIMATELY 25 GPM OF REVERSE-OSMOSIS PERMEATE IS COLLECTED IN THE REVERSE-OSMOSIS PERMEATE TANK, TK-1304. PERMEATE SAMPLES SHALL BE TAKEN AT SMP-1310 PER THE SAMPLING PLAN.

TK-1304 IS EQUIPPED TO ADJUST THE PH OF THE PERMEATE PRIOR TO POLISHING, IF REQUIRED. THE ADJUSTMENT USES EITHER 25% SODIUM HYDROXIDE OR 93% SULFURIC ACID WHICH IS PUMPED INTO THE TANK BASED ON AIC-1346. THE REVERSE OSMOSIS PERMEATE SHOULD BE DISCHARGED AT A PH OF BETWEEN 6 AND 9. A SMALL PORTION, 2.2 GPM, OF THE REVERSE-OSMOSIS CONCENTRATE IS SENT TO THE EVAPORATOR SUPPLY TANK, TK-1705, THROUGH FLOW CONTROL VALVE FCV-5201. THE REMAINDER IS RECYCLED BACK TO TK-1101.

ALARMS SHALL BE PROVIDED AS FOLLOWS:

- RO PH ADJUSTMENT TANK (TK-1301)
  - LOW LEVEL (LAL-1302)
  - HIGH LEVEL (LAH-1302)
  - HIGH HIGH LEVEL (LAHH-1302)
- RO FEED (LLW-228)
  - LOW FLOW (FAL-1315)
- RO FEED RECYCLE (LLW-220)
  - LOW FLOW (FAL-1311)
- RO CIP TANK (TAC-4302)
  - HIGH LEVEL (LAH-4302)
- RO PERMEATE HOLDING TANK (TK-1304)
  - HIGH LEVEL (LAH-1344)
  - HIGH HIGH LEVEL (LAHH-1344)

5. POLISHING SYSTEM (OPTIONAL FOR EFFLUENT TO CANYON OUTFALL) (D-6021 & D-6022)

RUN CONDITIONS – INTERLOCKS:

NONE.

RUN CONDITIONS:

CONFIRM DISCHARGE POINT, APPROPRIATE VALVE ALIGNMENT ON POLISHING COLUMNS, CONFIRM AVAILABILITY OF EFFLUENT TANK, START P-1407

POLISHING SYSTEM OPERATION:

PERMEATE IS PUMPED AT A RATE OF 50.9 GPM, WITH 25.5 GPM BEING RECYCLED BACK TO TK-1304 AND 25.4 GPM BEING SENT TO THE ION-EXCHANGE UNITS, FLT-1401 TO FLT-1406. IF VALVED OUT (FOR TRANSFER TO ZLD), PERMEATE IS PUMPED DIRECTLY TO THE EFFLUENT STORAGE TANKS, TK-1501 AND TK-1502. 10,000 GPD OF REVERSE-OSMOSIS PERMEATE IS POLISHED THROUGH TWO SETS OF ION-EXCHANGE UNITS (PERCHLORATE AND METAL CONTAMINANT REMOVAL) AND A SET OF ADSORBERS FOR REMOVAL OF ORGANICS. EACH SET OF ION-EXCHANGE UNITS AND THE ADSORBERS ARE OPERATED IN A LEAD-LAG CONFIGURATION WITH SAMPLING (SMP-1410, SMP-1412, AND SMP-1414) ON THE DISCHARGE OF THE LEAD UNIT PER THE SAMPLING PLAN. WHEN BREAKTHROUGH IS DETECTED FROM THE LEAD UNIT, THE LEAD UNIT IS DRAINED BY OPEN THE DRAIN VALVE AT THE BOTTOM OF THE CYLINDER. INSTALL NEW UNIT IN THE LAG POSITION. CAP THE SPENT UNIT AND DISPOSITION AS PRESCRIBED BY LANL OPERATING PROCEDURES.

ALARMS SHALL BE PROVIDED AS FOLLOWS:

- RO PERMEATE RECYCLE (LLW-449)
  - LOW FLOW (FAL-1403)
  - HIGH FLOW (FAH-1403)
- TREATED EFFLUENT (LLW-2667)
  - LOW FLOW (FAL-1405)
  - HIGH FLOW (FAH-1405)

LLW SWTPS

6. DE-WATERING SYSTEM (D-6028 to D-6030)

RUN CONDITIONS – INTERLOCKS:

I-1 SOFTWARE PROCESS INTERLOCK ON LAH-1123 (TK-1101) CLOSES VALVE AOBV-1157.

I-5 SOFTWARE PROCESS INTERLOCK ON LAHH-1722 (TK-1705) CLOSES VALVE AOBV-5626, AOBV-1737, AND AOBV-1323.

I-7 SOFTWARE PROCESS INTERLOCK ON LAL-1722 (TK-1705) STOPS PUMP P-1705 AND STOPS EVAP 1701/1702.

I-8 SOFTWARE PROCESS INTERLOCK ON LAL-1700 (TK-1706) STOPS PUMP P-1706.

I-12 SOFTWARE PROCESS INTERLOCK ON LAHH-1700 (TK-1708) STOPS EVAP 1701/1702.

RUN CONDITIONS:

CONFIRM EVAPORATOR FEED AVAILABLE IN TK-1705 (LI-1722) AND SPACE AVAILABLE IN TK-1706 (LI-1700) TO RECEIVE CONDENSATE AND ENCLOSURE ENC-1702 READY TO RECEIVE CONCENTRATE.

DE-WATERING SYSTEM OPERATION:

START EVAPORATOR UNIT TO INVOKE AUTOMATIC OPERATION. IN AUTOMATIC MODE, PRESSING RUN BUTTON INITIALIZES VALVE CONFIGURATION AND ENERGIZES THE VACUUM PUMP. WHEN PRESSURE IS DRAWN DOWN TO 30 TORR, THE FEED INLET VALVE OPENS AND FEED IS DRAWN INTO THE EVAPORATION TANKS. THE WATER COOLED CONDENSER STARTS AND THE COMPRESSOR STARTS.

PROCESS INSTRUMENTATION MONITORS THE LEVEL IN THE EVAPORATION TANKS AND THE CONDENSATION TANKS. EVAPORATION TANK LEVEL IS AUTOMATICALLY CONTROLLED BY FLOAT SWITCHES; INLET VALVE OPENS AS NEEDED TO MAINTAIN THE TARGET LEVEL. WHEN CONDENSATE LEVEL RISES TO UPPER LEVEL FLOAT, THE CONDENSATE DISCHARGE PUMP TURNS ON DRAINING THE CONDENSATION TANKS FOR A PRESET TIME OR UNTIL TK-1708 IS FULL.

AFTER A PRESET AMOUNT OF CONDENSATE HAS BEEN PUMPED, THE RESIDUAL CONCENTRATE IN THE EVAPORATOR WILL BE 30% TOTAL SOLIDS. DRUMS ARE FILLED BY MANUALLY OPERATING THE CONCENTRATE PUMP.

THE EVAPORATOR SHOULD NOT BE LEFT OVERNIGHT WITH 30% CONCENTRATE BECAUSE IT WILL BECOME SUPERSATURATED AS IT COOLS TO ROOM TEMPERATURE. AFTER THE EVAPORATOR HAS BEEN TURNED OFF FOR THE DAY, P-1705 AND THE CONCENTRATE PUMP SHOULD BE USED TO CIRCULATE

ALARMS SHALL BE PROVIDED AS FOLLOWS:

- EVAPORATOR SUPPLY TANK (TK-1705)
  - LOW LEVEL (LAL-1722)
  - HIGH LEVEL (LAH-1722)
  - HIGH HIGH LEVEL (LAHH-1722)
- DRUM ENCLOSURE (ENC-1702)
  - WEIGHT HIGH (WAH-1702)
  - WEIGHT HIGH HIGH (WAHH-1702
- EVAPORATOR CONDENSATE TANK (TK-1708)
  - LOW LEVEL (LAL-1700)
  - HIGH LEVEL (LAH-1700)
  - HIGH HIGH LEVEL (LAHH-1722)

NO	DATE	CLASS REV	ADC	DESCRIPTION	DWN	DES	CHKD	SUB	APP

AECOM

RLWTF-UP LOW LEVEL WASTE SUBPROJECT

PROCESS SYSTEM SEQUENCE OF OPERATIONS

BLDG. 230 TA-50

DRAWN	V DAWSON
DESIGN	S MOORE
CHECKED	E ROGERS
DATE	5/8/14

SUBMITTED MANNY TARIN — APPROVED FOR RELEASE ED ARTIGLIA

Los Alamos NATIONAL LABORATORY PO Box 1663 Los Alamos, New Mexico 87545

SHEET D-6032 254 OF 434

CLASSIFICATION | REVIEWER | DATE

PROJECT ID 100761 | DRAWING NO C55864 | REV 0

M. EVELYN ROGERS NEW MEXICO 22184 PROFESSIONAL ENGINEER 5/15/14

25827 : 1285

File Location: P:\RLWTF LOW-LEVEL WASTE FACILITY\300 CAD\C55864 MAIN BUILDING\SHEETS\14 PROCESS\55864-D-6032-R0.DWG
Plot Date: Monday, May 12, 2014
Plotted By: DAWSON, VANESSA

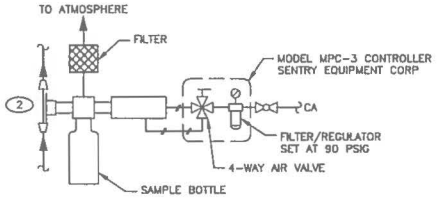

1 COMPOSITE SAMPLER DIAGRAM

SCALE: NONE

D-6010, D-6013, D-6024, D-6029

SAMPLER NO.	CA LINE NO.	VALVE NO.	PCV NO.	CHECK VALVE NO.	FILTER
SMP-1104	CA-109-SS150-1/2"	V-1136	PCV-1701	VC-1105	
SMP-1212	CA-110-SS150-1/2"	V-1137	PCV-1702	VC-1106	
SMP-1705	CA-111-SS150-1/2"	V-1138	PCV-1703	VC-1111	
SMP-1708	CA-112-SS150-1/2"	V-1140	PCV-1704	VC-1113	
SMP-1716	CA-111-SS150-1/2"	V-1141	PCV-1705	VC-1127	

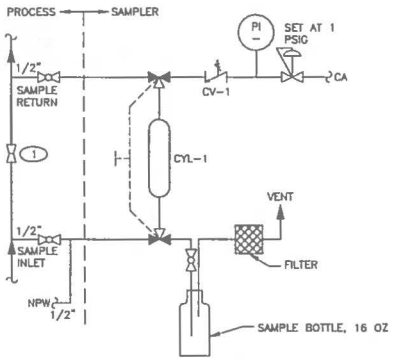

2 MANUAL FIXED VOLUME SAMPLER DIAGRAM

SCALE: NONE

D-6010, D-6014, D-6017, D-6020, D-6021, D-6022, D-6023, D-6027, D-6028, D-6030, C55867-D-6412

SAMPLER NO.	LINE NO.	PCV NO.	PI NO.	CHECK VALVE NO.	FILTER
SMP-1106	CA-113-SS150-1/4"	PCV-1701	PI-1708	VC-1114	
SMP-1203	CA-114-SS150-1/4"	PCV-1702	PI-1709	VC-1115	
SMP-1306	CA-115-SS150-1/4"	PCV-1703	PI-1710	VC-1116	
SMP-1310	CA-116-SS150-1/4"	PCV-1704	PI-1712	VC-1117	
SMP-1408	CA-117-SS150-1/4"	PCV-1705	PI-1713	VC-1118	
SMP-1410	CA-118-SS150-1/4"	PCV-1706	PI-1714	VC-1119	
SMP-1412	CA-119-SS150-1/4"	PCV-1707	PI-1716	VC-1121	
SMP-1414	CA-120-SS150-1/4"	PCV-1708	PI-1717	VC-1122	
SMP-1707	CA-121-SS150-1/4"	PCV-1709	PI-1719	VC-1123	
SMP-1711	CA-122-SS150-1/4"	PCV-1710	PI-1721	VC-1124	
SMP-1706	CA-123-SS150-1/4"	PCV-1711	PI-1722	VC-1125	
SMP-1709	CA-124-SS150-1/2"	PCV-1712	PI-1723	VC-1126	
SMP-1504*					

*ON C55867-D-6412.

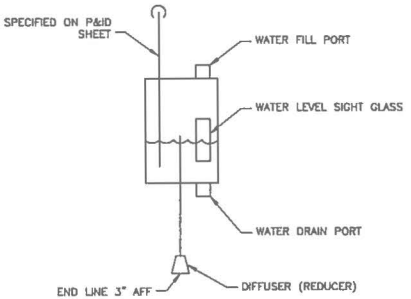

3 METERING PUMP/TAC TYPICAL DIAGRAM

SCALE: NONE

D-6011, D-6012, D-6015, D-6018, D-6019, D-6020, C55867-D-6412

PUMP NO.	FOOT VALVE NO.	PRV NO.
P-4001	V-4001	
P-4002	V-4002	
P-4003	V-4003	
P-4006	V-4004	
P-4007	V-4007	
P-4010	V-4010	
P-4011	V-4011	
P-4012*	V-4012	
P-4013*	V-4013	

*ON C55867-D-6412.

4 TANK SEAL POT DIAGRAM

SCALE: NONE

D-6012, D-6013, D-6015, D-6016, D-6019, D-6020, D-6023, D-6025, D-6027, D-6028, D-6030

TANK NO.	SEAL POT NO.	LINE NO.
TK-1101	SP-1101	XX-000-SS150-2"
TK-1102	SP-1102	XX-000-SS150-2"
TK-1301	SP-1301	XX-000-SS150-2"
TAC-4200	SP-4200	XX-000-SS150-1"
TAC-4201	SP-4201	XX-000-SS150-1"
TAC-4302	SP-4302	XX-000-SS150-1 1/2"
TK-1304	SP-1304	XX-000-SS150-1 1/2"
TK-1707	SP-1707	XX-000-SS150-1"
TK-1702	SP-1702	XX-000-SS150-1"
TK-1703	SP-1703	XX-000-SS150-1"
TK-1705	SP-1705	XX-000-SS150-1"
TK-1706	SP-1706	XX-000-SS150-1"

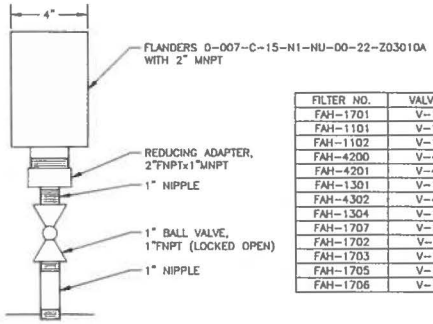

FILTER NO.	VALVE NO.
FAH-1701	V-1773
FAH-1101	V-1103
FAH-1102	V-1135
FAH-4200	V-4203
FAH-4201	V-4204
FAH-1301	V-1305
FAH-4302	V-4355
FAH-1304	V-1359
FAH-1707	V-1779
FAH-1702	V-1711
FAH-1703	V-1729
FAH-1705	V-1740
FAH-1706	V-1760

5 STANDARD BREATHER ASSEMBLY DIAGRAM

SCALE: NONE

D-6010, D-6012, D-6013, D-6015, D-6016, D-6019, D-6020, D-6023, D-6025, D-6027, D-6028, D-6030

KEYED NOTES

1. GO DOWN ONE PIPE SIZE WITH BACK TO BACK REDUCERS TO CREATE SMALL BACK PRESSURE.
2. REDUCERS ARE REQUIRED ONLY ON 1/2" PIPE TO INCREASE FROM 1/2" TO 1". ISOLOK ADAPTERS ARE 1" AND GREATER.

"PRIORITY DRAWING"

NO	DATE	CLASS REV	ADC	DESCRIPTION	DWN	DES	CHKD	SUB	APP

AECOM

RLWTF-UP LOW LEVEL WASTE SUBPROJECT

MFV AND ISOLOK SAMPLER DIAGRAM

DRAWN V DAVISON
DESIGN S MOORE
CHECKED E ROGERS
DATE 5/8/14

BLDG. 230 TA-50

SUBMITTED MANNY TAREN

APPROVED FOR RELEASE ED ARTIGLIA

Los Alamos NATIONAL LABORATORY PO Box 1663 Los Alamos, New Mexico 87545

SHEET D-6035

255 OF 434

CLASSIFICATION REVIEWER DATE

PROJECT ID 100761

DRAWING NO C55864

REV 0

EVELYN ROGERS NEW MEXICO 12180 PROFESSIONAL ENGINEER 5/9/14

9621

File Location: P:\RLWTF LOW-LEVEL WASTE FACILITY\300 CAD\C55864 MAIN BUILDING\SHEETS\14 PROCESS\55864-D-6035-R0.DWG
Plotted By: MOORE, STEPHEN Plot Date: Monday, May 05, 2014

MECHANICAL SYMBOL LEGEND

(ALL ABBREVIATIONS SHOWN ARE NOT NECESSARILY USED ON THE DRAWINGS)

(ALL SYMBOLS SHOWN ARE NOT NECESSARILY USED ON THE DRAWINGS)

ABBREVIATIONS

AFF	ABOVE FINISHED FLOOR
AFG	ABOVE FINISHED GRADE
AD	ACCESS DOOR
AI	ANALOG INPUT
AL	ACOUSTIC LINING
AC	AIR CONDITIONING
AO	ANALOG OUTPUT
AHU	AIR HANDLING UNIT
AR	ARGON
AV	ANALOG VALVE
BAS	BUILDING AUTOMATION SYSTEM
BC	BOLT CIRCLE
BDD	BACKDRAFT DAMPER
BOD	BOTTOM OF DUCT
BOP	BOTTOM OF PIPE
BHP	BRAKE HORSEPOWER
BTUH	BTU PER HOUR
BI	BINARY INPUT
BO	BINARY OUTPUT
BP	BUILDING PRESSURE
BV	BINARY VALUE
C	COMMON
CAM	CONTINUOUS AIR MONITORING
CAV	CONSTANT AIR VOLUME
CFM	CUBIC FEET PER MINUTE
CO	CLEANOUT
COND	CONDENSATE
CONT.	CONTINUATION
CS	CARBON STEEL
CU	COPPER
D	DRAIN
DMP	DAMPER
DX	DIRECT EXPANSION
EL	ELBOW, ELEVATION
EP	ELECTRIC-PNEUMATIC
EXH	EXHAUST
EXV	EXHAUST VALVE
°F	DEGREES FAHRENHEIT
FT.	FEET
FPM	FEET PER MINUTE
F.G.	FILTER GAUGE
FH	FUME HOOD
FOB	FLAT ON BOTTOM
FOT	FLAT ON TOP
FLEX	FLEXIBLE
FC	FLEXIBLE CONNECTOR
FCS	FACILITY CONTROL SYSTEM
FD	FLOOR DRAIN, FIRE DAMPER
FE	FAN EXHAUST
GPH	GALLONS PER HOUR
GPM	GALLONS PER MINUTE
GFE	GOVERNMENT FURNISHED EQUIPMENT
GA	GAGE
GL	GLYCOL
HGT	HEIGHT
HD	HEAD, HUB DRAIN HEAT DETECTOR
HEPA	HIGH EFFICIENCY PARTICULATE AIR
HFM	HAND AND FOOT MONITOR
HCL	HEATING COIL
HOA	HAND-OFF-AUTOMATIC
HP	HORSEPOWER
HTG	HEATING
HTR	HEATER
HVAC	HEATING, VENTILATING AND AIR CONDITIONING
HW	HOT WATER
HYD	HYDRANT
HZ	HERTZ
IN	INCHES
I.D.	INNER DIAMETER
IRI	INDUSTRIAL RISK INSURERS
KW	KILOWATT
KWH	KILOWATT HOUR
LV	LOUVER
MA	MIXED AIR
MAX	MAXIMUM
MIN	MINIMUM
MOV	MOTOR OPERATED VALVE
MS	MOTOR STARTER
NA	NOT APPLICABLE
NC	NORMALLY CLOSED
NO.	NUMBER (QUANTITY)
NO	NORMALLY OPEN
NPW	NON-POTABLE WATER
OBD	OPPOSED BLADE DAMPER
OA	OUTSIDE AIR
O.C.	ON CENTER
O.D.	OUTER DIAMETER
OHM	OCCUPATIONAL HEALTH MONITORING
P&ID	PIPING AND INSTRUMENTATION DIAGRAM
PCM	PERSONAL CONTAMINATION MONITORING
PCV	PRESSURE CONTROL VALVE
PH	MEASURE OF ACIDITY OR ALKALINITY
PL	PLACES, PLATE
PSIG	POUNDS PER SQUARE INCH GAGE
PRV	PRESSURE REDUCING VALVE
PRV	PRESSURE RELIEF VALVE
PSV	PRESSURE SAFETY VALVE
QTY	QUANTITY
RLA	RELIEF AIR
RA	RETURN AIR
RA	REFERENCE AIR
RPM	REVOLUTIONS PER MINUTE
SA	SUPPLY AIR
SD	SMOKE DETECTOR
SIM	SIMILAR
SP	STATIC PRESSURE
S.R.	SHORT RADIUS
SST	STAINLESS STEEL TUBING
TYP	TYPICAL
TBD	TO BE DETERMINED
TCV	TEMPERATURE CONTROL VALVE
TOC	TOP OF CONCRETE
UB	UP BLAST
VX	VACUUM EXHAUST
VAV	VARIABLE AIR VOLUME
VEL	VELOCITY
VTR	VENT THRU ROOF
V	VOLTS
VAC	VOLTS ALTERNATING CURRENT
VD	VOLUME DAMPER
WG	WATER GAUGE

EQUIPMENT CODE LISTING

AFTERCOOLER
ACL AFTER COOLER

AIR DRYER
DAD DESICCANT AIR DRYER
DAR REFRIGERANT AIR DRYER

AIR WASHER
WA AIR WASHER

BACKFLOW PREVENTER
BFP BACKFLOW PREVENTER

BASEBOARD HEATER
BDW BASEBOARD HEATER, HOT WATER
BDE BASEBOARD HEATER, ELECTRIC

BOILERS
BHW HOT WATER BOILER (HEATING)
BS STEAM BOILER (HEATING)
BWS HOT WATER SUPPLY BOILER (POTABLE/NOT-POTABLE)

EQUIPMENT CODE LISTING (CONT.)

CHILLERS
CWA ABSORPTION WATER CHILLER
CWR REFRIGERANT WATER CHILLER

COMPRESSORS
CA AIR COMPRESSOR
CR REFRIGERANT COMPRESSOR

CONDENSING UNIT (W/REFRIGERANT COMPRESSORS)
RUA REFRIGERANT AIR COOLED CONDENSING UNIT

DEHUMIDIFIER
DHM DEHUMIDIFIER

FANS
FB FAN BOOSTER
FE EXHAUST AIR FAN
FRA RETURN AIR FAN
FS SUPPLY AIR FAN

FILTERS (AIR)
FAB REPLACEMENT AIR FILTER (6" DEEP AND LARGER)
FAC CLEANABLE AIR FILTER (PERMANENT TYPE)
FAH HEPA FILTER
FAL CARBON/CHARCOAL AIR FILTER
FAP EVAPORATIVE COOLER PAD
FAR REPLACEMENT AIR FILTER (UP TO 4" DEEP)
FES ELECTROSTATIC AIR FILTER
FT FILTER TRAIN

GENERATORS
GDE DIESEL ENGINE GENERATOR
GGE GASOLINE ENGINE GENERATOR
GNE NATURAL GAS ENGINE GENERATOR
GNS STEAM DRIVEN GENERATOR

HEATERS (UNIT/SPACE WITH FANS)
HUG GAS HEATER
HUE ELECTRIC HEATER
HUI RADIANT (INFRARED) HEATER
HUS STEAM HEATER
HUW HOT WATER HEATER

HEAT EXCHANGERS
HXG HEAT EXCHANGER, WATER/GLYCOL TO AIR
HXO HEAT EXCHANGER, OIL TO WATER
HXS HEAT EXCHANGER, STEAM TO WATER
HXW HEAT EXCHANGER, WATER TO WATER
HXR HEAT EXCHANGER, REFRIGERANT

HUMIDIFIERS
HAS AIR HUMIDIFIER, STEAM SPRAY
HAW AIR HUMIDIFIER, WATER SPRAY

HVAC UNITS
ACR REFRIGERANT AIR CONDITIONING UNIT (DX COOLING ONLY)
CAE EVAPORATIVE AIR COOLER
CAV CONSTANT AIR VOLUME UNIT
CAW CHILLED WATER AIR CONDITIONING UNIT (COOLING ONLY)
HRC HEAT RECOVERY COIL
HV HEATING AND VENTILATING UNIT
HVA HEATING, VENTILATING, AND AIR CONDITIONING UNIT
VAV VARIABLE AIR VOLUME UNIT

PUMPS
PA ACID PUMP (CAUSTIC, CHEMICAL, ETC.)
PBF BOILER FEED PUMP
PC CONDENSATE PUMP (ALL TYPES)
PCT COOLING TOWER PUMP
PCW CHILLED WATER PUMP
PDH HOT WATER PUMP (POTABLE)
PDW DEIONIZED WATER PUMP
PHW HOT WATER HEATING PUMP
PF FIRE PUMP
PS SUMP PUMP (REGARDLESS OF USE)
PSR RAW SEWAGE PUMP
PV VACUUM PUMP
PWS WATER SPRAY PUMP
PWT WASTE TREATMENT PUMP

SCREENS
SF SCREEN, FIRE

TANKS
TCI TANK, CHEMICAL INJECTION
TCA COMPRESSED AIR TANK
THW HOT WATER STORAGE TANK
TSA TANK, SEPARATOR, AIR
TX EXPANSION TANK

VALVES
VM MOTORIZED VALVE
EAV EXHAUST AIR VALVE
SAV SUPPLY AIR VALVE
TCV TEMPERATURE CONTROL VALVE

WATER HEATERS
HWE ELECTRIC WATER HEATER
HWG GAS WATER HEATER

WATER PRESSURE REGULATORS
RPW WATER PRESSURE REGULATOR

PIPING SYMBOLS

SYMBOL	DESCRIPTION
	BALL VALVE
	BUTTERFLY VALVE
	CHECK VALVE
	CONTROL VALVE (TWO WAY)
	CONTROL VALVE (3-WAY)
	DIAPHRAGM VALVE
	GATE VALVE
	GATE VALVE (ANGLE)
	GATE VALVE (OS & Y)
	GLOBE VALVE
	GLOBE VALVE (ANGLE)
	HOSE BIBB W/VAC BREAKER
	NEEDLE VALVE
	PLUG VALVE COCK
	PRESSURE REDUCING VALVE
	RELIEF OR SAFETY VALVE
	SOLENOID VALVE
	AUTOMATIC AIR VENT
	MANUAL AIR VENT
	EXPANSION JOINT
	EXPANSION LOOP
	FLEXIBLE PIPE CONNECTION
	PIPE ANCHOR
	PRESSURE GAUGE WITH VALVE
	STEAM TRAP
	STRAINER
	STRAINER W/BLOW-OFF VALVE
	THERMOMETER
	PETE'S PLUG (PRESS/TEMP)
	TEMP GAUGE WITH VALVE
	CAP OR PLUG
	FLEXIBLE MECHANICAL COUPLING
	RIGID MECHANICAL COUPLING
	ELBOW - TURNED UP
	ELBOW - TURNED DOWN
	FLANGE CONNECTION
	REDUCER - CONCENTRIC
	REDUCER - ECCENTRIC - BOTTOM OF PIPE LEVEL
	REDUCER - ECCENTRIC - TOP OF PIPE LEVEL
	TEE - OUTLET UP
	TEE - OUTLET DOWN
	UNION
	END OF PIPE
	DIRECTION OF FLOW
	PITCH PIPING DOWN
	FLOW INDICATOR
	SIGHT GLASS
	PRESSURE GAUGE
	FLOOR DRAIN
	FLOOR DRAIN
	MAINTENANCE ACCESS
SD	SMOKE DETECTOR

PIPING SYMBOLS/LINE TYPES

RFND	REFRIGERANT DISCHARGE (HOT GAS)
RFNL	REFRIGERANT LIQUID
RFNR	REFRIGERANT RELIEF
RFNS	REFRIGERANT SUCTION
PWC	POTABLE WATER-COLD
PWH	POTABLE HOT WATER
PWHS	POTABLE HOT WATER SUPPLY
PWHR	POTABLE HOT WATER RETURN
D	DRAIN
CWR	CHILLED WATER RETURN
CWS	CHILLED WATER SUPPLY
HRR	HEAT RECOVERY RETURN
HRS	HEAT RECOVERY SUPPLY
HWR	HEATING WATER RETURN
HWS	HEATING WATER SUPPLY
PCWR	PROCESS COOLING WATER RETURN
PCWS	PROCESS COOLING WATER SUPPLY
ICW	INDUSTRIAL COLD WATER
CS	CHEMICAL SUPPLY
NPWMU	NON-POTABLE WATER-MAKEUP
NPHWS	NON-POTABLE HOT WATER SUPPLY
NPHWR	NON-POTABLE HOT WATER RETURN
CONLP	CONDENSATE LOW PRESSURE
CONHP	CONDENSATE HIGH PRESSURE
HGBP	HOT GAS BYPASS

DUCTWORK SYMBOLS

- DIRECTION OF FLOW
- ACOUSTICAL DUCT LINING
- 12"X20" — INSIDE DUCT SIZE (FIRST FIGURE IS SIDE SHOWN)
- SUPPLY DUCT SECTION, DOWN
- RETURN DUCT SECTION, DOWN
- SUPPLY DUCT SECTION, UP
- RETURN DUCT SECTION, UP
- EXHAUST DUCT SECTION, UP
- FLEXIBLE DUCT
- TURNING VANES
- INCLINED
  - * RISE (R)
  - * DROP (D)
- DAMPER
  - ** AD-AUTOMATIC DAMPER
  - ** BDD-BACKDRAFT DAMPER
  - ** FD-FIRE DAMPER
  - ** MOD-MOTOR OPERATED DAMPER
  - ** FSD-FIRE SMOKE DAMPER
  - ** VD-MANUAL VOLUME DAMPER
- OR — SIZE "X"
- ACCESS DOOR IN DUCT
- FIRE DAMPER (NS)
- COMBINATION FIRE/SMOKE DAMPER (FSD) (NS)
- SUPPLY RECTANGULAR CEILING DIFFUSER
- RETURN, RELIEF, OR EXHAUST REGISTER OR GRILLE
- TRANSFER GRILLE

GENERAL NOTES

1. PROVIDE TURNING VANES IN ALL RECTANGULAR ELBOWS.
2. THE CFM OF EACH DIFFUSER, REGISTER, ETC. IS INDICATED AS A NUMBER NEXT TO THE SYMBOL DESIGNATION ON THE DRAWINGS.
3. COORDINATE ALL DUCTWORK AND HVAC PIPING WITH PLUMBING PIPING, FIRE PROTECTION PIPING, STRUCTURAL AND ELECTRICAL SYSTEMS AND PROVIDE NECESSARY OFFSETS TO AVOID CONFLICTS AND TO MAINTAIN EQUIPMENT ACCESS AND SERVICEABILITY.
4. SEAL ALL TRANSVERSE JOINTS, LONGITUDINAL SEAMS, DUCT WALL PENETRATIONS AND FITTING CONNECTIONS ON ALL DUCT SYSTEMS.
5. PROVIDE 2 FT. X 4 FT. CLEARANCE BELOW ALL MECHANICAL ITEMS REQUIRING MAINTENANCE. THESE MECHANICAL ITEMS INCLUDE TERMINAL HEATING COILS, BALANCING DAMPERS, AND VARIABLE AIR VOLUME BOXES.
6. ALL STRUCTURAL WELDED CONNECTIONS SHALL BE PERFORMED IN ACCORDANCE WITH LANL APPROVED WELDING SPECIFICATION AND AWS D1.1/D1.1M SPECIFICATION FOR WELDING STEEL. ALL TUBULAR CONNECTIONS SHAL BE INSPECTED PER AWS D1.1 TABLE 6.1. ALL NON-TUBULAR COMPONENTS SHALL BE INSPECTED AS CYCLICALLY LOADED NON-TUBULAR CONNECTIONS PER AWS D1.1 TABLE 6.1. ALL PIPE WELDED CONNECTIONS SHALL BE PERFORMED IN ACCORDANCE WITH LANL APPROVED WELDING SPECIFICATION AND THE APPLICABLE ASME PRESSURE PIPING CODE IDENTIFIED IN THE CONSTRUCTION SPECIFICATION.
7. DETAILS WITH MISSING WELD INFORMATION (FOR EXAMPLE, SIZE OR NUMBER OF PLACES) SHALL BE PROVIDED ON FABRICATION DRAWINGS FOR APPROVAL PRIOR TO FABRICATION.
8. FOR REFRIGERATION EQUIPMENT, COMPLETE A "REFRIGERATION APPLIANCE/EQUIPMENT INVENTORY FORM" AND SUBMIT TO RRES-MAQ, IN ACCORDANCE WITH LANL PROCEDURE RRES-MAQ-311. FOR DISPOSAL OF EXISTING REFRIGERATION UNITS, FOLLOW LANL PROCEDURE RRES-MAQ-312,R5.
9. FOR FUEL BURNING EQUIPMENT, COMPLETE A "FUEL BURNING APPLIANCE/EQUIPMENT INVENTORY FORM" AND SUBMIT TO ENV-MAQ.

EQUIPMENT SYMBOLS

- DIAMOND SYMBOL INDICATES EQUIPMENT NUMBER REFERS TO SPECIFIC EQUIPMENT IDENTIFIED IN MECHANICAL EQUIPMENT LIST
- ELLIPSE SYMBOL INDICATES A KEYED NOTE THE NUMBER REFERS TO A SPECIFIC NOTE LISTED IN THE KEYED NOTE LIST
- NOMINAL FACE DIMENSIONS LISTED ON FLOOR PLAN OR LISTED ON DIFFUSER/GRILLE SCHEDULE.
- 12"x12" / A — LETTER IN SQUARE SYMBOL REFERS TO A SPECIFIC GRILLE OR REGISTER TYPE IDENTIFIED IN THE GRILLE/DIFFUSER SCHEDULE.
- 390 — CFM
- T — TEMPERATURE SENSOR/THERMOSTAT
- POC — POINT OF CONNECTION BETWEEN CURRENT WORK AND EXISTING
- POR — POINT OF REMOVAL BETWEEN CURRENT WORK AND EXISTING
- EXISTING EQUIPMENT TO BE REMOVED
- EXISTING EQUIPMENT TO REMAIN
- EXISTING PIPING TO BE REMOVED
- EXISTING PIPING TO REMAIN
- EQUIPMENT MAINTENANCE CLEARANCE
- CONDENSATE PUMP
- 1 — CIRCLE SYMBOL INDICATES UL LISTED FIRESTOP MATERIALS THE NUMBER REFERS TO A SPECIFIC NOTE LISTED IN EACH FIRESTOPPING DETAIL

NO	DATE	CLASS REV	ADC	DESCRIPTION	DWN	DES	CHKD	SUB	APP

AECOM

RLWTF-UP LOW LEVEL WASTE SUBPROJECT

MECHANICAL SYMBOL LEGEND AND GENERAL NOTES

DRAWN	V DAVIDSON
DESIGN	B SHREEVE
CHECKED	C MOYERS
DATE	5/8/14

BLDG. 230 TA-50

SUBMITTED MANNY TARIN — APPROVED FOR RELEASE ED ARTIGLIA

Los Alamos NATIONAL LABORATORY — PO Box 1663, Los Alamos, New Mexico 87545

CLASSIFICATION	REVIEWER	DATE
PROJECT ID: 100761	DRAWING NO: C55864	REV: 0

SHEET M-0001

256 OF 434

CHARLES MOYERS — NEW MEXICO — 18838 — REGISTERED PROFESSIONAL ENGINEER — 05-01-14

File Location: P:\RLWTF LOW-LEVEL WASTE FACILITY\300 CAD\C55864 MAIN BUILDING\SHEETS\18 MECHANICAL\S55864-M-0001-R0.DWG
Plotted By: MOORE, STEPHEN Plot Date: Monday, May 05, 2014

100761

PROCESS FLOW DIAGRAMS AND P&ID SYMBOLS (GENERAL INSTRUMENT OR FUNCTION SYMBOLS)

(ALL SYMBOLS SHOWN ARE NOT NECESSARILY USED ON THE DRAWINGS)

SYMBOL	DESCRIPTION
	VALVE
	ANGLE VALVE
	BUTTERFLY VALVE
	BALL VALVE
	3-WAY VALVE
	4-WAY VALVE
	GATE VALVE (OS & Y VALVE)
	DIAPHRAGM VALVE
	PRESSURE RELIEF
	DIAPHRAGM ACTUATOR
	TWO-WAY VALVE, FAIL CLOSED
	TWO-WAY VALVE, FAIL OPEN
	3-WAY VALVE W/DIAPHRAGM ACTUATOR
	4-WAY VALVE W/DIAPHRAGM ACTUATOR
	SPRING-OPPOSED SINGLE-ACTING ACTUATOR
	SPRING-OPPOSED DOUBLE-ACTING ACTUATOR
EH	ELECTROHYDRAULIC ACTUATOR
	HAND ACTUATOR OR HANDWHEEL
	RESTRICTION ORIFICE IN PROCESS LINE
	RESTRICTION ORIFICE DRILLED IN VALVE OR CIRCUIT SETTER
	FLOW STRAIGHTENING VANE
	DIAPHRAGM PRESSURE-BALANCED
	PRESSURE-REDUCING REGULATOR, SELF-CONTAINED, WITH HANDWHEEL ADJUSTABLE SET POINT
	PRESSURE REDUCING REGULATOR WITH EXTERNAL PRESSURE TAP
	DIFFERENTIAL-PRESSURE-REDUCING REGULATOR WITH INTERNAL AND EXTERNAL TAPS
	BACKPRESSURE REGULATOR, SELF-CONTAINED
	BACKPRESSURE REGULATOR WITH EXTERNAL PRESSURE TAP
PI	PRESSURE-REDUCING REGULATOR WITH INTEGRAL OUTLET PRESSURE RELIEF VALVE, AND OPTIONAL PRESSURE INDICATOR
PI	PRESSURE INDICATOR
	FLOW DIRECTION
	PRESSURE RELIEF OR SAFETY VALVE
	VACUUM RELIEF VALVE
	PRESSURE RELIEF OR SAFETY VALVE, STRAIGHT-THROUGH PATTERN, SPRING- OR WEIGHT-LOADED, OR WITH INTEGRAL PILOT
	RUPTURE DISK OR SAFETY HEAD FOR VACUUM RELIEF

SYMBOL	DESCRIPTION
	RUPTURE DISK OR SAFETY HEAD FOR PRESSURE RELIEF
X	PILOT LIGHT X=COLOR R=RED G=GREEN
	FLEX CONNECTION (RUBBER)
	FLEX CONNECTION (STEEL BRAIDED)
	SINGLE PITOT TUBE OR PITOT VENTURI TUBE
	FLOW METER
	FLOW NOZZLE OR VENTURI
	REDUCER
	SCREWED CAP
	PIPE CAP
	HOSE CONNECTION
	FLANGED CONNECTION (PIPING OR EQUIP)
	FLOW ORIFICE FIXED
	STRAINER WITH VALVE
	Y-STRAINER
	COMPRESSED AIR
	DUCTED AIR FLOW FROM SPACE
	CAPPED AIR DUCT
	SEISMIC SHUT OFF VALVE
	GATE VALVE (OPEN)
	GATE VALVE (CLOSED)
	GLOBE VALVE (OPEN)
	GLOBE VALVE (CLOSED)
	NEEDLE VALVE (OPEN)
	NEEDLE VALVE (CLOSED)
	PLUG VALVE (OPEN)
	PLUG VALVE (CLOSED)
	BALL VALVE (OPEN)
	BALL VALVE (CLOSED)
	CHECK VALVE
	SPRING CHECK VALVE
	ANGLE VALVE (OPEN)
	ANGLE VALVE (CLOSED)
	SAFETY OR RELIEF VALVE (INLET PORT SHOWN CLOSED)
	THREE-WAY VALVE (CLOSED PORT DARKENED)
	FOUR-WAY VALVE (ARROWS INDICATE FLOW DIRECTION)
	BALL-CHECK VALVE
	DUAL PURGE VALVE
	ALARM VALVE
	AIR INTAKE FILTER
	ALARM
	PRESSURE PORT OPEN TO SPACE PRESSURE

SYMBOL	DESCRIPTION
	IN-LINE FILTER
	DOUBLE BASKET STRAINER
	HOSE REEL
	OPEN DRAIN (SHOWN)
XX	XX= DRAIN SYSTEM ANNOTATIONS
	DRAIN (PLAN VIEW)
	CLEANOUT (PLAN VIEW)
	SANITARY VENT
	SILENCER/MUFFLER
	SPACE PENETRATIONS
	FIXED LOUVERS
XX	TRAP XX ANNOTATES FUNCTION
L	LUBRICATOR
	55 GALLON DRUM
	THERMOSTATIC VENT
	SPRINKLER ALARM (WATER MOTOR GONG)
	FLOW ALARM VALVE
	PIPE INSULATION
	COOLING TOWER
	CHILLER
	HORIZONTAL CENTRIFUGAL PUMP
	CENTRIFUGAL FAN WITH VARIABLE INLET VANES
	BLOWER/CENTRIFUGAL FAN
	ROTARY PUMP
	VERTICAL WET PIT PUMP
	PROGRESSIVE CAVITY PUMP
	VERTICAL SUMP PUMP
	HEATER
	HEAT EXCHANGER
	BUBBLE GAUGE
	TEMPERATURE CONTROL VALVE

SYMBOL	DESCRIPTION
	AXIAL FAN
	AXIAL FAN WITH VARIABLE INLET VANES
	2-STAGE RECIPROCATING AIR COMPRESSOR
	SINGLE STAGE RECIPROCATING AIR COMPRESSOR
	2-STAGE ROTARY SCREW AIR COMPRESSOR
	RECIPROCATING PUMP
	PRESSURE VESSELS, VERTICAL (SHOWN) OR HORIZONTAL (TANKS, RECEIVERS, SEPARATORS, SUMPS ETC.)
	TANK
	HVAC COIL (A) E ELECTRIC HW HEATING WATER DX DIRECT EXPANSION NG INDIRECT GAS FIRED CH CHILLED WATER STM STEAM GL GLYCOL (B) HCL HEATING COIL CCL COOLING COIL HRC HEAT RECOVERY COIL
	UNIT HEATER (A) HW HEATING WATER DX DIRECT EXPANSION STM STEAM (B) HCL HEATING COIL
	PRESSURIZED GAS BOTTLE
	DOUBLE CONTAINMENT TANK
	HUMIDIFIER
	MANUAL BALANCE DAMPER
	MULTI POINT PITOT TUBE ARRAY
MD/MC	DAMPER (NORMALLY OPEN) OR NORMALLY CLOSED
	EVAPORATIVE AIR COOLER
	OPPOSED BLADE DAMPER FOR HVAC EQUIPMENT
	BACKDRAFT DAMPER
	AXIAL FAN
TDV	TRIPLE DUTY VALVE

SYMBOL	DESCRIPTION
	SINGLE DUCT VARIABLE VOLUME BOX
A B	WING TYPE FACE AND BYPASS DAMPER (A) HW HEATING WATER DX DIRECT EXPANSION CH CHILLED WATER STM STEAM GL GLYCOL (B) HCL HEATING COIL CCL COOLING COIL HRC HEAT RECOVERY COIL
	COLLECTION BIN
	CYCLONE SEPARATOR
	FLUID RECOVERY PUMP
	DUAL SERVICE HEAT EXCHANGER
	MULTI BLADE DAMPER
	SINGLE BLADE DAMPER
M	MOTOR
	TEST PORT
	PILOT LIGHT
	SEPARATOR
	MIST ELIMINATOR
HEPA	HEPA FILTER
	CARBON ABSORBER FILTER
	ATMOSPHERIC FILTER

SYMBOL	DESCRIPTION
SD	SUCTION DIFFUSER
	PNEUMATIC-ELECTRIC TRANSDUCER
FT	FLOW TRANSMITTER
TT	TEMPERATURE TRANSMITTER
	BACK FLOW PREVENTER W/PRESSURE REDUCTION
	FIRESCREEN
	PREFILTER
	AIR COMPRESSOR W/TANK
	VACUUM PUMP
XXXX	ROOM NUMBER

LINE LABELING LEGEND

HWS-XXX-XX-1"

- LINE SIZE
- MATERIAL CLASSIFICATION
- LINE NUMBER
- LINE TYPE (SEE M-0001)

MATERIAL/CLASSIFICATION

CS = CARBON STEEL
CU = COPPER
SS = STAINLESS STEEL

NOTE: -▷◁- = NORMALLY OPEN (OPEN CENTER)
-▶◀- = NORMALLY CLOSED (SOLID CENTER)

NO	DATE	CLASS REV	ADC	DESCRIPTION	DWN	DES	CHKD	SUB	APP

AECOM

RLWTF-UP LOW LEVEL WASTE SUBPROJECT

PROCESS FLOW DIAGRAM AND P&ID SYMBOL LEGEND

DRAWN	V DAVISON
DESIGN	B SHREEVE
CHECKED	C MOYERS
DATE	5/8/14

BLDG. 230 TA-50

SUBMITTED MANNY TARIN — APPROVED FOR RELEASE ED ARTIGLIA

Los Alamos NATIONAL LABORATORY — PO Box 1663 Los Alamos, New Mexico 87545

SHEET M-0002

257 OF 434

CLASSIFICATION — REVIEWER — DATE

PROJECT ID 100761 — DRAWING NO C55864 — REV 0

CHARLES MOYERS 13838 REGISTERED PROFESSIONAL ENGINEER STATE OF NEW MEXICO 05-01-14

File Location: P:\RLWTF LOW-LEVEL WASTE FACILITY\500 CAD\C55864 MAIN BUILDING\SHEETS\13 MDDHANDA\330864-M-0002-R0.DWG
Plotted By: MOORE, STEPHEN Plot Date: Monday, May 05, 2014

330864

PROCESS FLOW AND PIPING AND INSTRUMENTATION DIAGRAM LEGEND

LINE TYPES

(ALL SYMBOLS SHOWN ARE NOT NECESSARILY USED ON THE DRAWINGS)

SYMBOL	DESCRIPTION
———	PROCESS FLOW LINE
———	INSTRUMENT SUPPLY OR CONNECTION TO PROCESS
—/—/—	UNDEFINED SIGNAL
—//—//—	PNEUMATIC SIGNAL
- - - - - -	ELECTRIC SIGNAL
—L—L—	HYDRAULIC SIGNAL
—X—X—	CAPILLARY TUBE
—∿—∿—	ELECTROMAGNETIC OR SONIC SIGNAL (GUIDED)
∿ ∿	ELECTROMAGNETIC OR SONIC SIGNAL (NOT GUIDED)
—o—o—	INTERNAL SYSTEM LINK (SOFTWARE OR DATA LINK
—•—•—	MECHANICAL LINK
OPTIONAL BINARY (ON-OFF) SYMBOLS	
—//—//—	PNEUMATIC BINARY SIGNAL
—·—·—·—	ELECTRIC BINARY SIGNAL
—E—E—	ELECTRICAL HEAT TRACING
—S—S—	STEAM HEAT TRACING
XX	FP – FLOOR PENETRATION RP – ROOF PENETRATION WP – WALL PENETRATION SB – SYSTEM BREAK

INSTRUMENT/FUNCTION SYMBOLS

	PRIMARY LOCATION NORMALLY ACCESSIBLE TO OPERATOR	FIELD MOUNTED	AUXILIARY LOCATION NORMALLY ACCESSIBLE TO OPERATOR	AUXILIARY LOCATION NORMALLY INACCESSIBLE TO OPERATOR
DISCRETE INSTRUMENTS	XX / XXX	XX / XXX	XX / XXX	XX / XXX
SHARED DISPLAY, SHARED CONTROL	XX / XXX	XX / XXX	XX / XXX	XX / XXX
COMPUTER FUNCTION	XX / XXX	XX / XXX	XX / XXX	XX / XXX
PROGRAMMABLE LOGIC CONTROL	XX / XXX	XX / XXX	XX / XXX	XX / XXX

XX / XXX FLOW INDICATOR

XX / XXX XX / XXX INSTRUMENTS SHARING COMMON HOUSING

X / XX PANEL MOUNTED PATCHBOARD POINT 12

INSTRUMENTATION IDENTIFICATION TABLE

- J–1 COMPONENT FUNCTION NUMBER
- J–2 COMPONENT SEQUENCE NUMBER
- J–2A COMPONENT SEQUENCE # CONT'D
- J–3 VENDOR DESIGNATION
- J–4 PANEL NUMBER
- J–5 APPLICABLE NOTES
- J–6 SYSTEM ACRONYM
- J–7 ASME TEST SYMBOL FOR TEST ONLY OR TEST PLUS NORMAL USE
- J–8 SET–POINT(S)
- J–9 FUNCTION (SEE INSTRUMENT/FUNCTION SYMBOLS)

NOTE

INSTRUMENTATION FUNCTION IDENTIFIERS (J–1) AND FUNCTION SYMBOLS PER ANSI/ISA S5.1.

VALVE & INSTRUMENTATION FUNCTION IDENTIFIERS (SELECTED)

FIRST–LETTERS	INITIATING, MEASURED, OR CONTROLLED VARIABLE	CONTROLLERS			VALVES	READOUT DEVICE		SWITCHES AND ALARM DEVICES *			TRANSMITTERS			SOLENOIDS, RELAYS, COMPUTING DEVICES	PRIMARY ELEMENT	TEST POINT	WELL OR PROBE	VIEWING DEVICE, GLASS	SAFETY DEVICE	FINAL ELEMENT
		RECORDING	INDICATING	BLIND		RECORDING	INDICATING	HIGH**	LOW	COMB	RECORDING	INDICATING	BLIND							
A	ANALYSIS	ARC	AIC	AC		AR	AI	ASH	ASL	ASHL	ART	AIT	AT	AY	AE	AP	AW			AV
B	BURNER/ COMBUSTION	BRC	BIC	BC		BR	BI	BSH	BSL	BSHL	BRT	BIT	BT	BY	BE		BW	BG		BZ
C	CONDUCTIVITY		CIC	CC										CCD	CE					
D	USER'S CHOICE																			
E	VOLTAGE	ERC	EIC	EC		ER	EI	ESH	ESL	ESHL	ERT	EIT	ET	EY	EE					EZ
F	FLOW RATE	FRC	FIC	FC	FCV FICV	FR	FI	FSH	FSL	FSHL	FRT	FIT	FT	FY	FE	FP		FG		FV
FQ	FLOW QUANTITY	FQRC	FQIC			FQR	FQI	FQSH	FQSL			FQIT	FQT	FQY	FQE					FQV
FF	FLOW RATIO	FFRC	FFIC	FFC		FFR	FFI	FFSH	FFSL						FE					FFV
G	USER'S CHOICE																			
H	HAND		HIC	HC	HV					HS										HV
I	CURRENT	IRC	IIC			IR	II	ISH	ISL	ISHL	IRT	IIT	IT	IY	IE					IZ
J	POWER	JRC	JIC	ARC		JR	JI	JSH	JSL	JSHL	JRT	JIT	JT	JY	JE					JV
K	TIME	KRC	KIC	KC	KCV	KR	KI	KSH	KSL	KSHL	KRT	KIT	KT	KY	KE					KV
L	LEVEL	LRC	LIC	LC	LCV	LR	LI	LSH	LSL	LSHL	LRT	LIT	LT	LY	LE		LW	LG		LV
M	MOISTURE/ HUMIDITY						MI						MT							
N	USER'S CHOICE																			
O	USER'S CHOICE																			
P	PRESSURE VACUUM	PRC	PIC	PC	PCV	PR	PI	PSH	PSL	PSHL	PRT	PIT	PT	PY	PE	PTP			PSV PSE	PV
PD	PRESSURE DIFFERENTIAL	PDRC	PDIC	PDC	PDCV	PDR	PDI	PDSH	PDSL		PDRT	PDIT	PDT	PDY	PE	PTP				PDV
Q	QUANTITY	QRC	QIC			QR	QI	QSH	QSL	QSHL	QRT	QIT	QT	QY	QE					QZ
R	RADIATION	RRC	RIC	RC		RR	RI	RSH	RSL	RSHL	RRT	RIT	RT	RY	RE		RW			RZ
S	SPEED	SRC	SIC	SC	SCV	SR	SI	SSH	SSL	SSHL	SRT	SIT	ST	SY	SE					SV
T	TEMPERATURE	TRC	TIC	TC	TCV	TR	TI	TSH	TSL	TSHL	TRT	TIT	TT	TY	TE	TP	TW		TSE	TV
T	TEMPERATURE DIFFERENTIAL	TDRC	TDIC	TDC	TDCV	TDR	TDI	TDSH	TDSL		TDRT	TDIT	TDT	TDY	TDE	TDP TP	TDW TW			TDV
U	MULTIVARIABLE					UR	UI							UY						UV
V	MACHINERY VIBRATION ANALYSIS					VR	VI	VSH VS	VSL	VSHL	VRT	VIT	VT	VY	VE					VZ
W	WEIGHT FORCE	WRC	WIC	WC	WCV	WR	WI	WSH	WSL	WSHL	WRT	WIT	WT	WY	WE					WZ
WD	WEIGHT FORCE DIFFERENTIAL	WDRC	WDIC	WDC	WDCV	WDR	WDI	WDSH	WDSL		WDRT	WDIT	WDT	WDY	WDE					WDZ
X	USER'S CHOICE																			
Y	EVENT STATE PRESSENCE		YIC	YC		YR	YI	YSH	YSL				YT	YY	YE					YZ
Z	POSITION DIMENSION	ZRC	ZIC	ZC	ZCV	ZR	ZI	ZSH	ZSL	ZSHL	ZRT	ZIT	ZT	ZY	ZE					ZV
ZD	GAUGING DEVIATION	ZDRC	ZDIC	ZDC	ZDCV	ZDR	ZDI	ZDSH	ZDSL		ZDRT	ZDIT	ZDT	ZDY	ZDE					ZDV

NOTE:
THIS TABLE IS NOT ALL–INCLUSIVE.

* A, ALARM, THE ANNUNCIATING DEVICE, MAY BE USED IN THE SAME FASHION AS S, SWITCH, THE ACTING DEVICE.

** THE LETTERS H AND L MAY BE OMITTED IN THE UNDEFINED CASE.

OTHER POSSIBLE COMBINATIONS:

FO	(RESTRICTION ORIFICE)	PFR	(RATIO)
FRK, HIK	(CONTROL STATIONS)	KQI	(RUNNING TIME INDICATOR)
FX	(ACCESSORIES)	QQI	(INDICATING COUNTER)
TJR	(SCANNING RECORDER)	WKIC	(RATE–OF–WEIGHT–LOSS CONTROLLER)
LLH	(PILOT LIGHT)	HMS	(HAND MOMENTARY SWITCH)

(ALL SYMBOLS SHOWN ARE NOT NECESSARILY USED ON THE DRAWINGS)

INSTRUMENT/FUNCTION SYMBOLS

SYMBOL	DESCRIPTION
X	P = PURGE OR FLUSHING DEVICE R = RESET FOR LATCH–TYPE ACTUATOR
X	S = SOLENOID D = DIGITAL P = PILOT T = TRAP M = MAGNETIC FLOWMETER SP = SET POINT
√	ROOT EXTRACTION
±	BIAS
X	MULTIPLY
>	HIGH SELECTING
<	LOW SELECTING
⩾	HIGH LIMITING
⩽	LOW LIMITING
K	PROPORTIONAL
–K	REVERSE PROPORTIONAL
+	SUMMING
÷	DIVIDING
CA–1	EQUIPMENT TAG

PLAN BREAKS & CONTINUATION FLAGS

SYMBOL	DESCRIPTION
Y# X OR X Y#	PIPE OR WIRE IS CONTINUED ON DRAWING X (INCLUDING SHEET NUMBER), GRID COORDINATE (Y#); FLOW IS TO THAT DRAWING.
X Y# OR Y# X	PIPE OR WIRE IS CONTINUED ON DRAWING X (INCLUDING SHEET NUMBER), GRID COORDINATE (Y#); FLOW IS FROM THAT DRAWING.
X Y#	PIPE OR WIRE IS CONTINUED ON DRAWING X (INCLUDING SHEET NUMBER), GRID COORDINATE (Y#); FLOW IS IN BOTH DIRECTIONS

INTERLOCK SYMBOL

I/X INTERLOCK

INTERLOCK NUMBER

INSTRUMENT/EQUIPMENT LABELING LEGEND

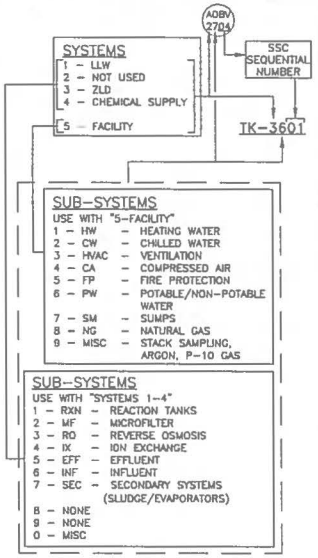

NO	DATE	CLASS REV	ADC	DESCRIPTION	DRWN	DES	CHKD	SUB	APP

AECOM

RLWTF–UP LOW LEVEL WASTE SUBPROJECT

PROCESS FLOW DIAGRAM AND P&ID LEGEND

BLDG. 230 TA–50

DRAWN	V DAVISON
DESIGN	B SHREEVE
CHECKED	C MOYERS
DATE	5/8/14

SUBMITTED MANNY TARIN — APPROVED FOR RELEASE ED ARTIGLIA

Los Alamos NATIONAL LABORATORY PO Box 1663 Los Alamos, New Mexico 87545

SHEET M–0003

258 OF 434

CLASSIFICATION — REVIEWER — DATE

PROJECT ID 100761 — DRAWING NO C55864 — REV 0

CHARLES MOYERS NEW MEXICO 18538 LICENSED PROFESSIONAL ENGINEER 05-09-14

File Location: P:\RLWTF LOW-LEVEL WASTE FACILITY\300 CAD\C55864 MAIN BUILDING\SHEETS\15 MECHANICAL\55864-M-0003-R0.DWG
Plotted By: MOORE, STEPHEN Plot Date: Monday, May 05, 2014

60221

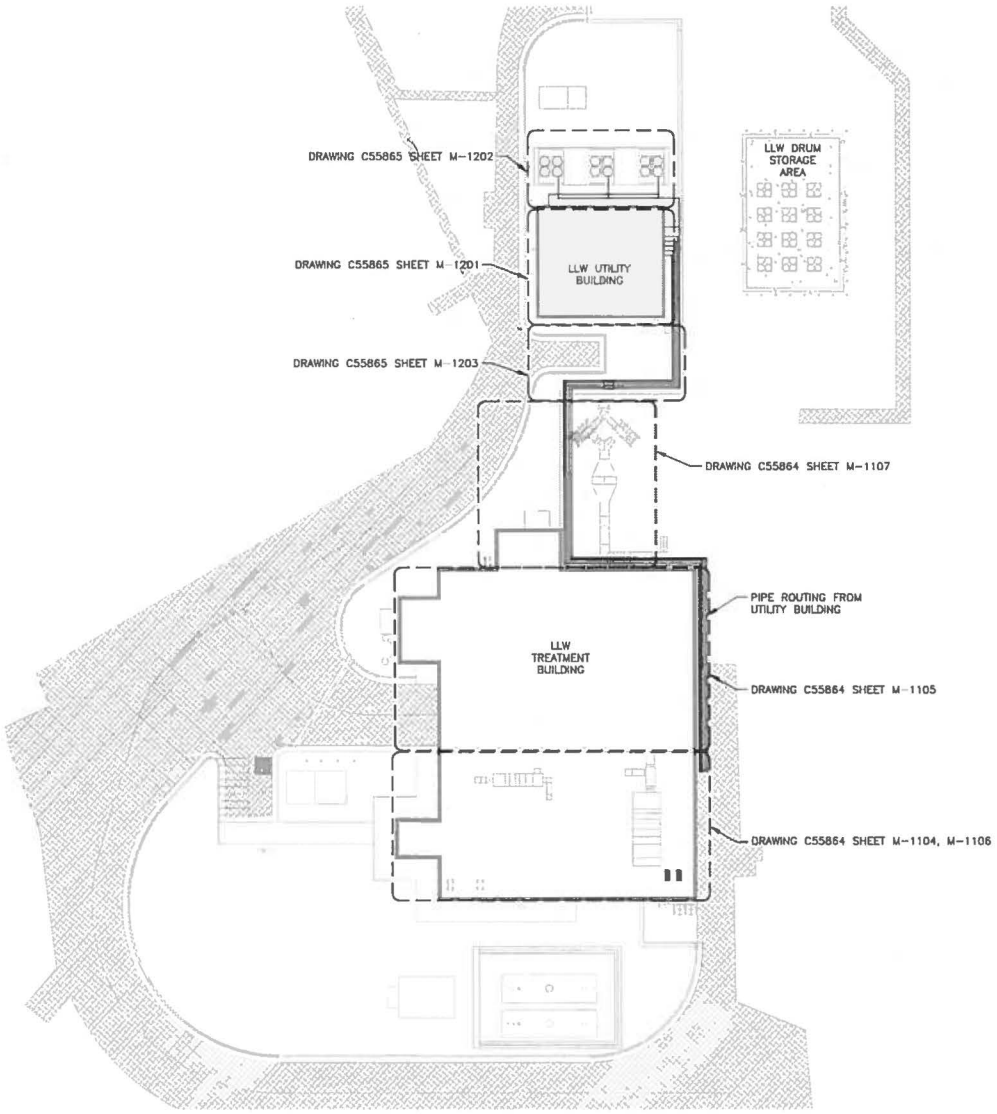

MECHANICAL SITE PIPING PLAN

1/16"=1'-0"

GENERAL NOTES

1. IF THIS SHEET IS NOT 24"x 36", THEN IT IS A REDUCED SIZE PLOT. USE GRAPHIC SCALE ACCORDINGLY.

NO	DATE	CLASS REV	ADC	DESCRIPTION	DWN	DES	CHKD	SUB	APP

AECOM

RLWTF-UP LOW LEVEL WASTE SUBPROJECT

MECHANICAL SITE PIPING PLAN

BLDG. 230 TA-50

DRAWN	V DAVISION
DESIGN	B SHREEVE
CHECKED	C MOYERS
DATE	5/8/14

SUBMITTED MANNY TARIN

APPROVED FOR RELEASE ED ARTIOLIA

Los Alamos NATIONAL LABORATORY PO Box 1663 Los Alamos, New Mexico 87545

CHARLES MOYERS NEW MEXICO 16938 REGISTERED PROFESSIONAL ENGINEER 05-01-14

SHEET	
	M-1000
259	OF 434

CLASSIFICATION | REVIEWER | DATE

PROJECT ID	DRAWING NO	REV
100761	C55864	0

File Location: P:\RLWTF LOW-LEVEL WASTE FACILITY\500 CAD\C55884 MAIN BUILDING\SHEETS\13 MECHANICAL\55884-M-1000-R0.DWG
Plotted By: MOORE, STEPHEN Plot Date: Monday, May 05, 2014
0121

GENERAL NOTES

1. IF THIS SHEET IS NOT 24"x 36", THEN IT IS A REDUCED SIZE PLOT. USE GRAPHIC SCALE ACCORDINGLY.
2. ALL PRESSURES ARE WITH RESPECT TO ATMOSPHERIC PRESSURE.

- +0.05 IN. WG
- ±0.00 IN. WG
- SLIGHTLY NEGATIVE
- −0.05 IN. WG
- −0.1 IN. WG
- −0.2 IN. WG
- −0.25 IN. WG

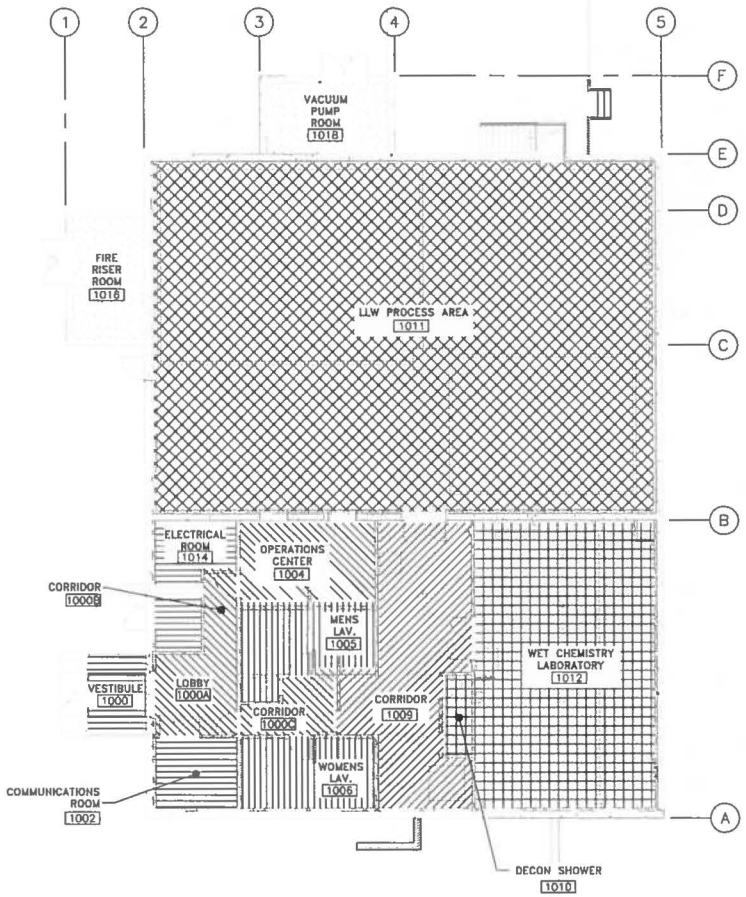

ZONE PRESSURE PLAN

1/8"=1'-0"

NO	DATE	CLASS REV	ADC	DESCRIPTION	DWN	DES	CHKD	SUB	APP

AECOM

RLWTF–UP LOW LEVEL WASTE SUBPROJECT

ZONE PRESSURE PLAN

DRAWN	V DAWSON
DESIGN	B SHREEVE
CHECKED	C MOYERS
DATE	5/6/14

BLDG. 230 TA–50

SUBMITTED MANNY TARIN

APPROVED FOR RELEASE ED ARTIGLIA

Los Alamos NATIONAL LABORATORY PO Box 1663 Los Alamos, New Mexico 87545

SHEET M–1100

260 OF 434

CLASSIFICATION REVIEWER DATE

PROJECT ID 100761

DRAWING NO C55864

REV 0

CRAIG MOYERS NEW MEXICO 15838 LICENSED PROFESSIONAL ENGINEER

05-09-14

12211

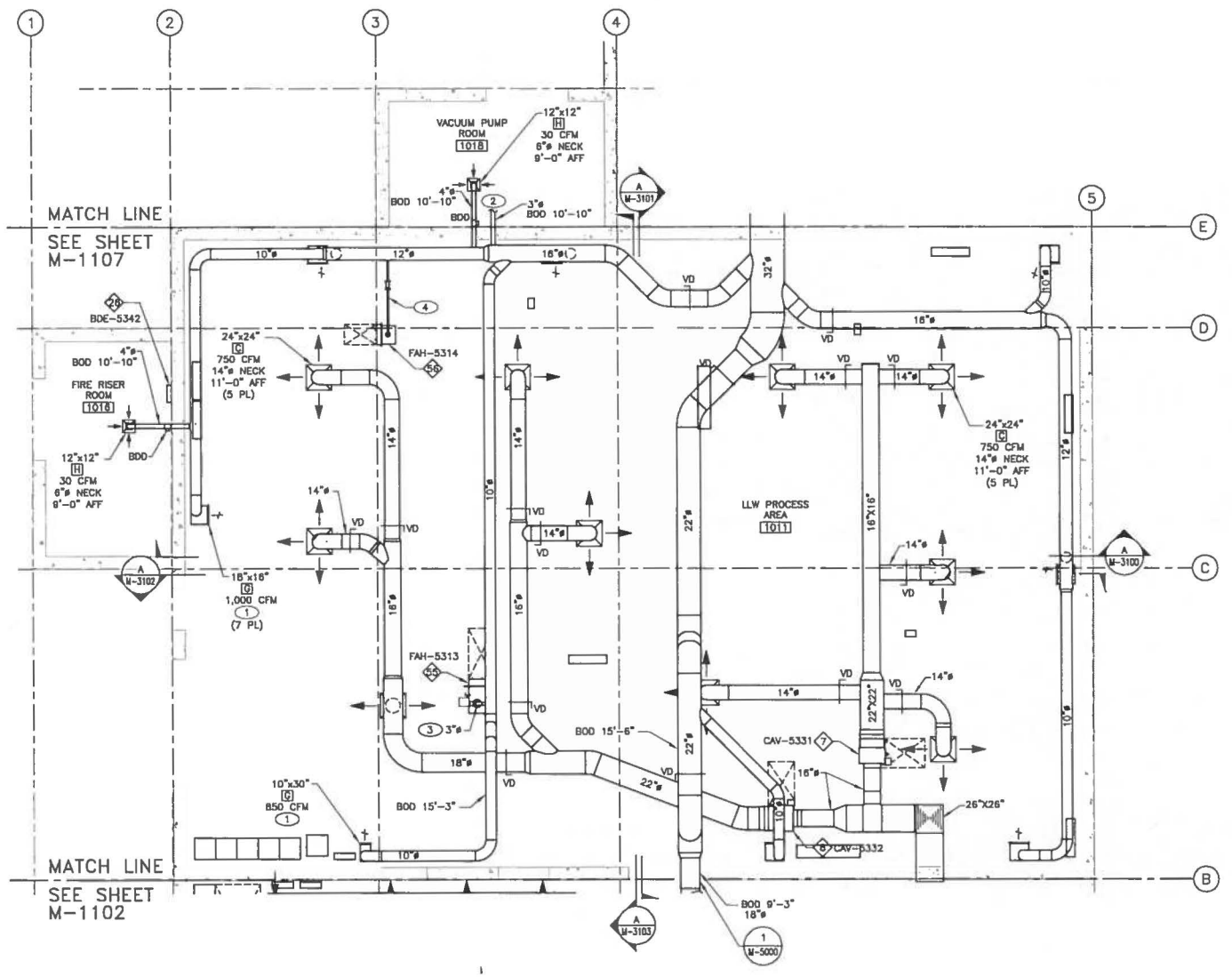

HVAC PLAN – NORTH

1/4"=1'-0"

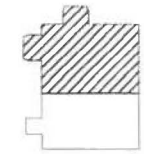

KEY PLAN
SCALE: NONE

GENERAL NOTES

1. 4-WAY DIFFUSERS TO BE USED FOR SUPPLY AIR.
2. EXHAUST DROPS TO BE CONNECTED WITH A ROUND DUCT, 90° ELBOW DOWN, THEN A TRANSITION TO RECTANGULAR DUCT. REGISTER TO BE POSITIONED 12" ABOVE THE FLOOR.
3. IF THIS SHEET IS NOT 24"x 36", THEN IT IS A REDUCED SIZE PLOT. USE GRAPHIC SCALE ACCORDINGLY.
4. SEE SHEETS M-7000 THROUGH M-7006 FOR MECHANICAL EQUIPMENT LIST.
5. FINISHED FLOOR ELEVATION 7265.0 FT=100'-0".
6. CENTER OF DUCT 14'-0" AFF UNLESS OTHERWISE NOTED.
7. SEISMIC SUPPORTS, SWAY BRACING, ETC. SHALL BE DESIGNED AND INSTALLED PER SPECIFICATION 22 0548.

KEYED NOTES

1. INSTALL VOLUME DAMPER IN DROP APPROXIMATELY 6'-0" AFF.
2. 3" SS PIPE FROM DISCHARGE OF CAM AND FAS VACUUM PUMP SKID (PV-5001).
3. 3" SS EXHAUST PIPE FROM ENC-1703.
4. 1" SS PIPE FROM DISCHARGE OF VACUUM PUMP ON EVAP-1701. FILTER (FAH-5314) EXHAUST.

NO	DATE	CLASS REV	ADC	DESCRIPTION	DWN	DES	CHKD	SUB	APP
1	7/7/14	U		REVISED GENERAL NOTE 7					

AECOM

RLWTF-UP LOW LEVEL WASTE SUBPROJECT

HVAC PLAN – NORTH

BLDG. 230 TA-50

DRAWN	V DAVISON
DESIGN	B SHREEVE
CHECKED	C MOYERS
DATE	5/8/14

SUBMITTED: MANNY TARIN

APPROVED FOR RELEASE: ED ARTIGLIA

Los Alamos NATIONAL LABORATORY PO Box 1663 Los Alamos, New Mexico 87545

SHEET M-1101

261 OF 434

CLASSIFICATION | REVIEWER | DATE

PROJECT ID 100761 | DRAWING NO C55864 | REV 1

M. EVELYN ROGERS NEW MEXICO 22184 PROFESSIONAL ENGINEER

File Location: W:\RLWTF LOW-LEVEL WASTE FACILITY\500 CAD\C55864 MAIN BUILDING\SHEETS\15 MECHANICAL\55864-M-1101-R1.DWG
Plotted By: GRILLEZOS, ALAN Plot Date: Thursday, July 03, 2014

12312

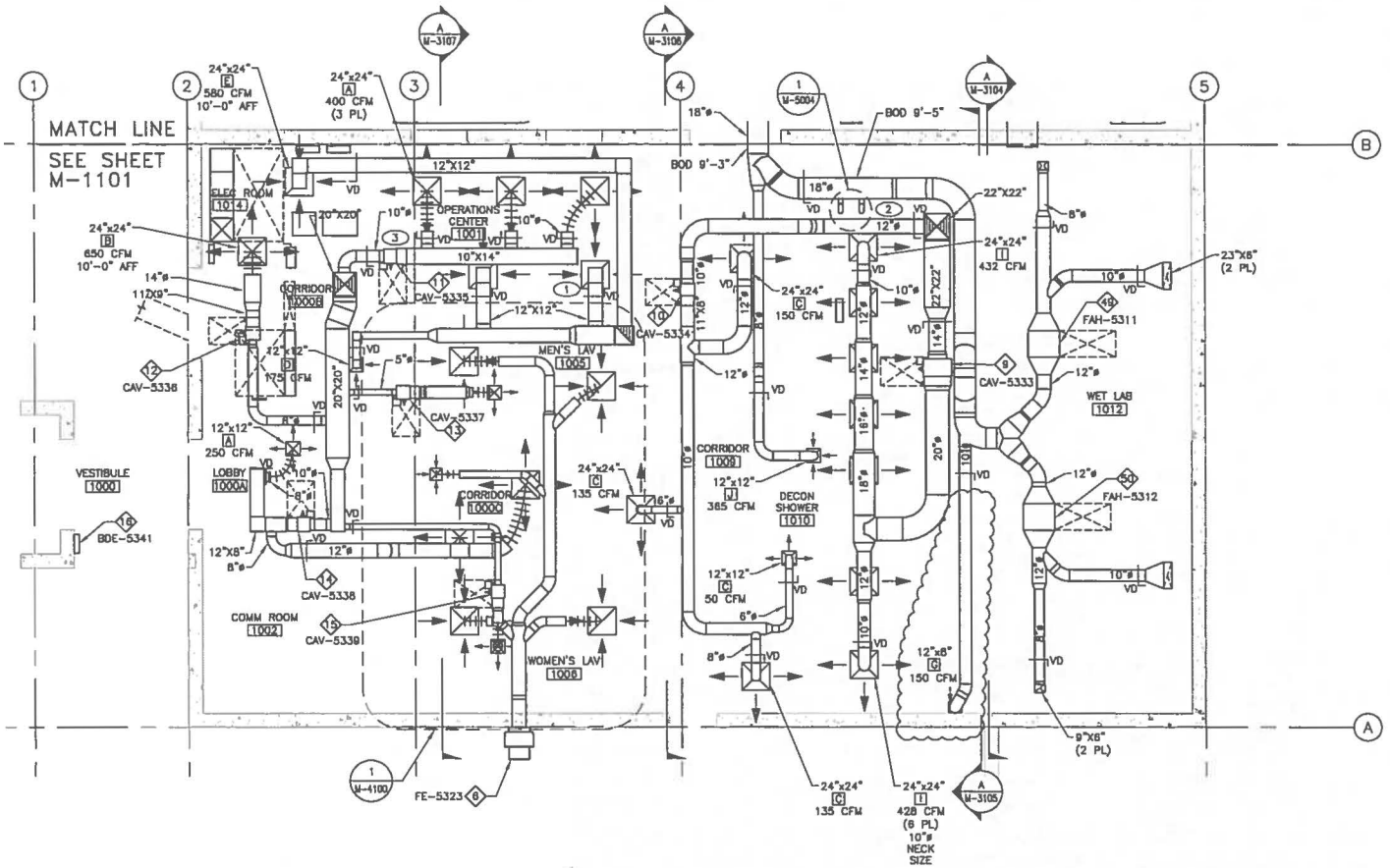

HVAC PLAN – SOUTH

1/4"=1'-0"

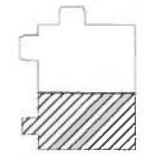

KEY PLAN
SCALE: NONE

GENERAL NOTES

1. 4-WAY DIFFUSERS TO BE USED FOR SUPPLY AIR.
2. SUPPLY DIFFUSERS TO BE CEILING SURFACE MOUNTED UNLESS OTHERWISE NOTED.
3. IF THIS SHEET IS NOT 24"x 36", THEN IT IS A REDUCED SIZE PLOT. USE GRAPHIC SCALE ACCORDINGLY.
4. SEE SHEETS M-7000 THROUGH M-7006 FOR MECHANICAL EQUIPMENT LIST.
5. FINISHED FLOOR ELEVATION 7265.00 FT = 100'-0"
6. SEISMIC SUPPORTS, SWAY BRACING, ETC. SHALL BE DESIGNED AND INSTALLED PER SPECIFICATION 22 0548.

KEYED NOTES

1. 24"X24", ITEM NO. D, 580 CFM.
2. EXHAUST PORT FOR MASS SPEC TORCH BOX (100 CFM) AND RF GENERATOR EXHAUST PORT (160 CFM).
3. 24"x24", ITEM NO. D, 575 CFM.

NO	DATE	CLASS REV	ADC	DESCRIPTION	DWN	DES	CHKD	SUB	APP
1	7/7/14	U		MOVED EXHAUST					

AECOM

RLWTF-UP LOW LEVEL WASTE SUBPROJECT

HVAC PLAN – SOUTH

BLDG. 230 TA-50

DRAWN	V DAVISON
DESIGN	B SHREEVE
CHECKED	C MOYERS
DATE	5/8/14

SUBMITTED: MANNY TARIN

APPROVED FOR RELEASE: ED ARTIGLIA

Los Alamos NATIONAL LABORATORY PO Box 1663 Los Alamos, New Mexico 87545

SHEET M-1102

262 OF 434

CLASSIFICATION | REVIEWER | DATE

PROJECT ID 100761 | DRAWING NO C55864 | REV 1

M. EVELYN ROGERS NEW MEXICO 22164 PROFESSIONAL ENGINEER 7-7-14

File Location: W:\RLWTF LOW-LEVEL WASTE FACILITY\500 CAD\C55864 MAIN BUILDING\SHEETS\15 MECHANICAL\55864-M-1102-R1.DWG
Plotted By: BROEDMAN, DARLENE; Plot Date: Wednesday, July 02, 2014

12313

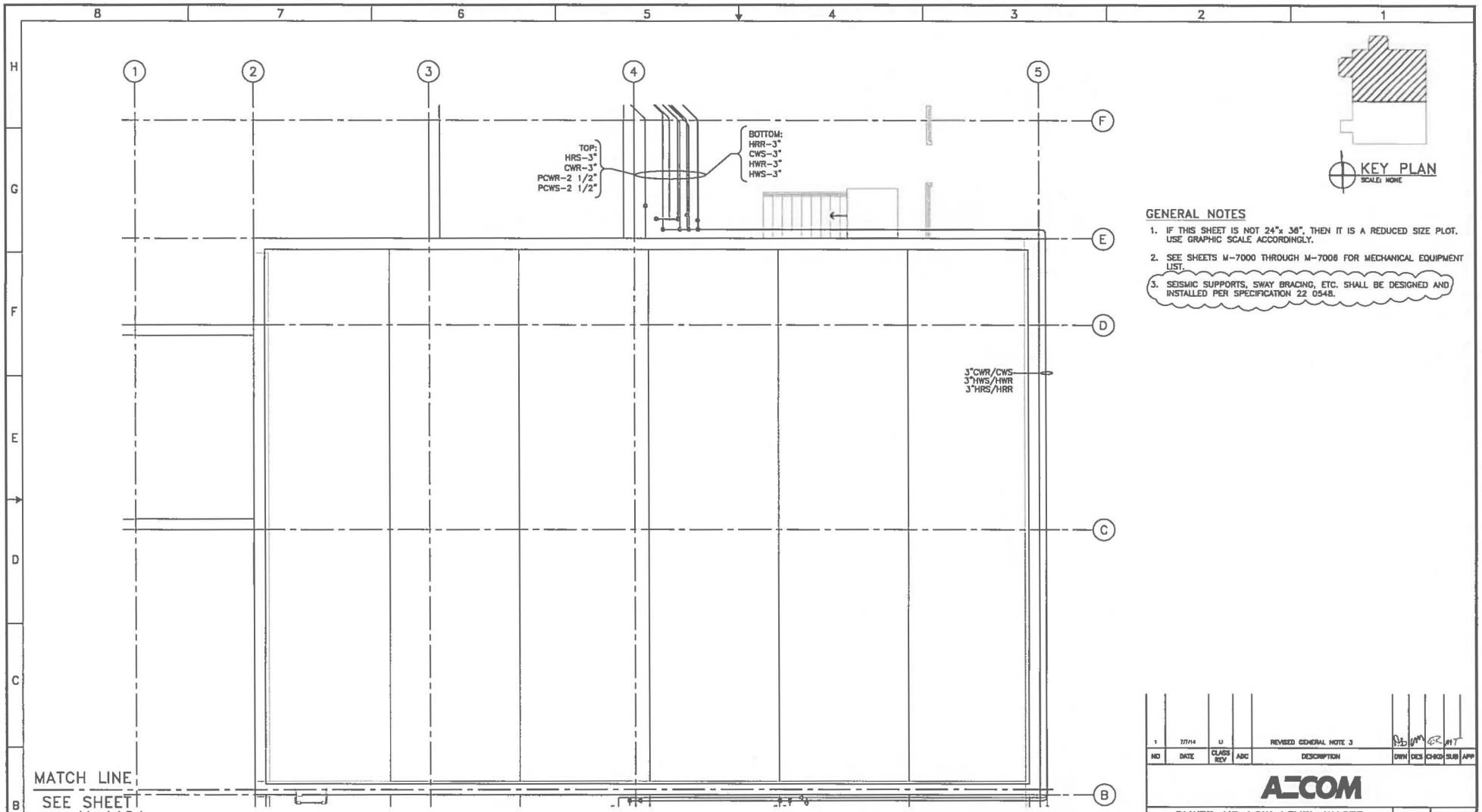

ROOF HVAC PLAN – NORTH

1/4"=1'-0"

KEY PLAN
SCALE: NONE

GENERAL NOTES

1. IF THIS SHEET IS NOT 24"x 36", THEN IT IS A REDUCED SIZE PLOT. USE GRAPHIC SCALE ACCORDINGLY.
2. SEE SHEETS M-7000 THROUGH M-7008 FOR MECHANICAL EQUIPMENT LIST.
3. SEISMIC SUPPORTS, SWAY BRACING, ETC. SHALL BE DESIGNED AND INSTALLED PER SPECIFICATION 22 0548.

NO	DATE	CLASS REV	ADC	DESCRIPTION	DRN	DES	CHKD	SUB	APP
1	7/7/14	U		REVISED GENERAL NOTE 3					

AECOM

RLWTF-UP LOW LEVEL WASTE SUBPROJECT

ROOF HVAC PLAN – NORTH

BLDG. 230 TA-50

DRAWN	V DAVISON
DESIGN	B SHREEVE
CHECKED	C MOYERS
DATE	5/8/14

SUBMITTED: MANNY TARIN

APPROVED FOR RELEASE: ED ARTIOLA

Los Alamos NATIONAL LABORATORY PO Box 1663 Los Alamos, New Mexico 87545

SHEET M-1103

263 OF 434

CLASSIFICATION | REVIEWER | DATE

PROJECT ID 100761 | DRAWING NO C55864 | REV 1

M. EVELYN ROBLES NEW MEXICO 22184 PROFESSIONAL ENGINEER

File: Location: W:\RLWTF LOW-LEVEL WASTE FACILITY\000 CAD\C55864 MAIN BUILDING\SHEETS\15 MECHANICAL\55864-M-1103-R1.DWG
Plotted By: DILLEDOE, ALAN Plot Date: Thursday, July 03, 2014

Printed: 7/21/2014

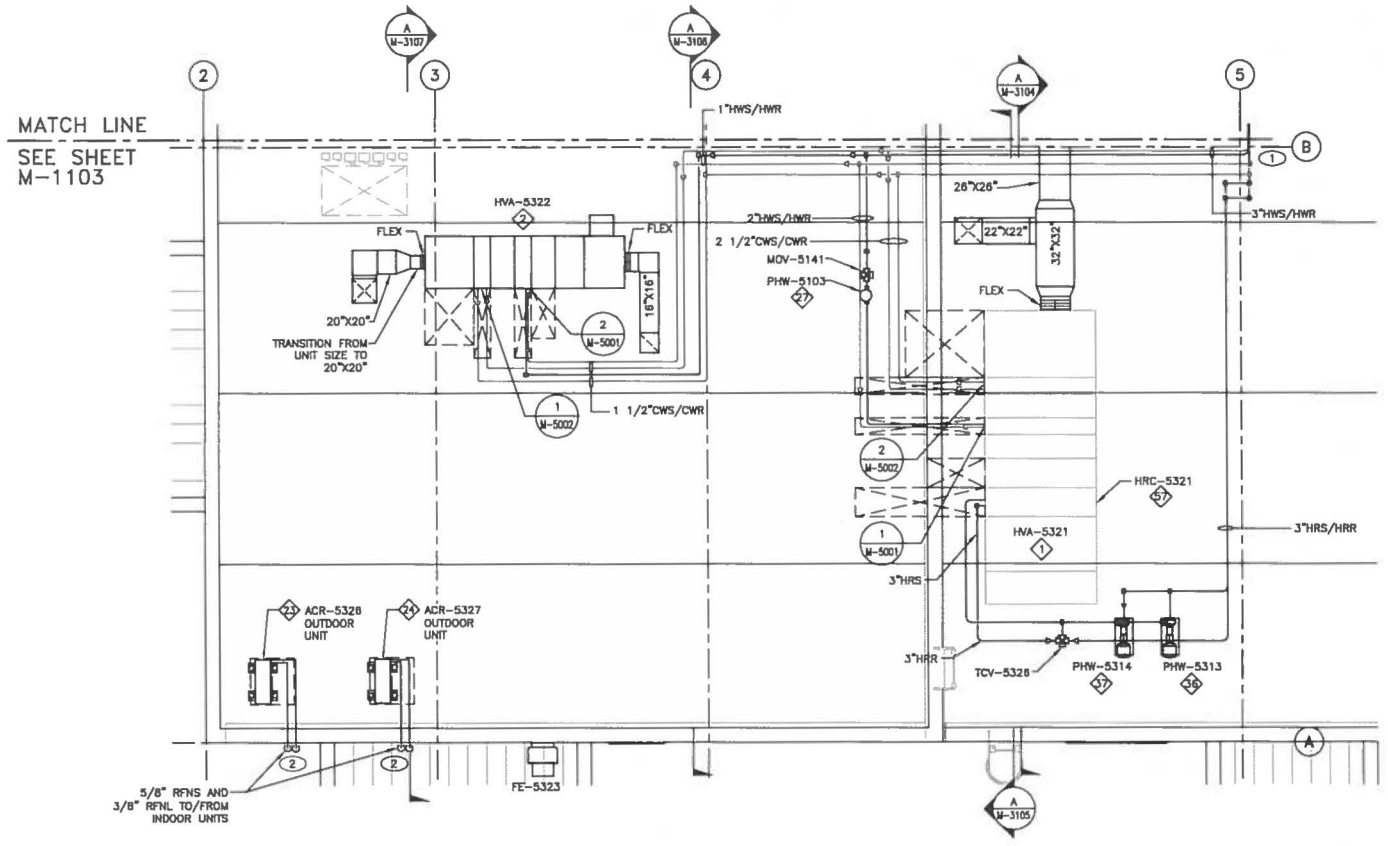

ROOF HVAC PLAN – SOUTH

1/4"=1'-0"

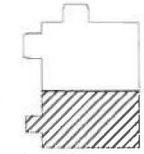

KEY PLAN
SCALE: NONE

GENERAL NOTES

1. IF THIS SHEET IS NOT 24"x 36", THEN IT IS A REDUCED SIZE PLOT. USE GRAPHIC SCALE ACCORDINGLY.
2. SEE SHEETS M-7000 THROUGH M-7006 FOR MECHANICAL EQUIPMENT LIST.
3. SEISMIC SUPPORTS, SWAY BRACING, ETC. SHALL BE DESIGNED AND INSTALLED PER SPECIFICATION 22 0548.

KEYED NOTES

1. PIPING ROUTED STACKED ALONG BUILDING WALL, CONTINUED ON M-1106.
2. CONTINUED ON M-1106.

NO	DATE	CLASS REV	ADC	DESCRIPTION	DWN	DES	CHKD	SUB	APP
1	7/7/14	U		REVISED GENERAL NOTE 3					

AECOM

RLWTF-UP LOW LEVEL WASTE SUBPROJECT

ROOF HVAC PLAN – SOUTH

BLDG. 230 TA-50

DRAWN	V DAVISON
DESIGN	B SHREEVE
CHECKED	C MOYERS
DATE	5/8/14

SUBMITTED: MANNY TARIN

APPROVED FOR RELEASE: ED ARTIGLIA

Los Alamos NATIONAL LABORATORY PO Box 1663 Los Alamos, New Mexico 87545

SHEET M-1104

264 OF 434

CLASSIFICATION | REVIEWER | DATE

PROJECT ID 100761 | DRAWING NO C55864 | REV 1

M. EVELYN ROGERS NEW MEXICO 22184 PROFESSIONAL ENGINEER 7-7-14

File Location: W:\RLWTF LOW-LEVEL WASTE FACILITY\500 CAD\C55864 MAIN BUILDING\SHEETS\15 MECHANICAL\55864-M-1104-R1.DWG
Plotted By: BROWN, DARLENE; Plot Date: Thursday, July 03, 2014

12315

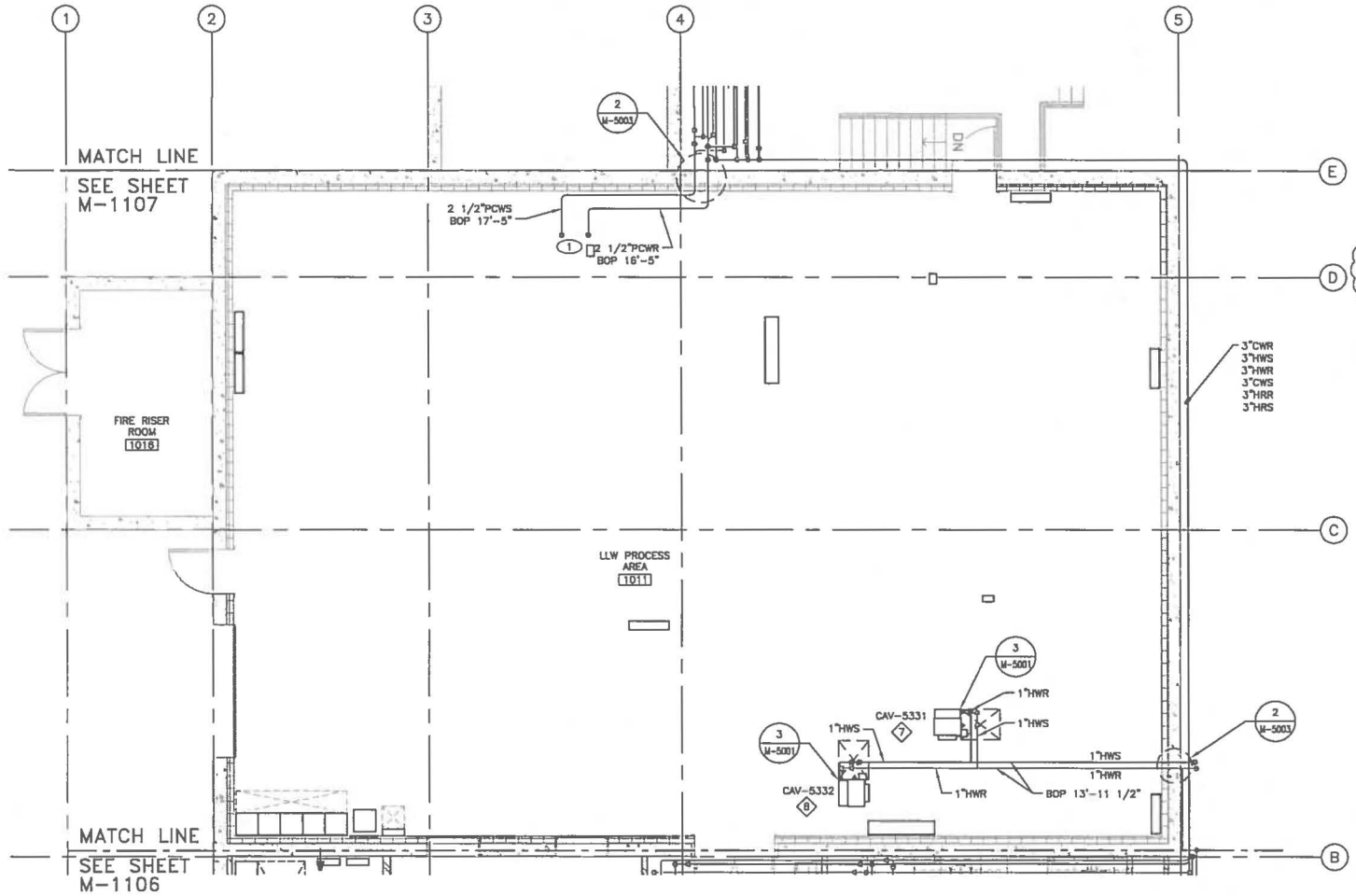

MECHANICAL PIPING PLAN – NORTH

1/4"=1'-0"

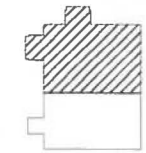

KEY PLAN
SCALE: NONE

GENERAL NOTES

1. IF THIS SHEET IS NOT 24"x 36", THEN IT IS A REDUCED SIZE PLOT. USE GRAPHIC SCALE ACCORDINGLY.
2. SEE SHEETS M-7000 THROUGH M-7006 FOR MECHANICAL EQUIPMENT LIST.
3. FINISHED FLOOR ELEVATION 100'-0" = 7265.00 FT.
4. SEISMIC SUPPORTS, SWAY BRACING, ETC. SHALL BE DESIGNED AND INSTALLED PER SPECIFICATION 22 0548.
5. NON-SEISMIC SUPPORTS AND OR HANGERS SHALL BE INSTALLED PER SPECIFICATION 22 0529.

KEYED NOTES

1. PCWS/PCWR DROP DOWN TO COLD EVAPORATOR COOLING WATER CONNECTIONS.

NO	DATE	CLASS REV	ADC	DESCRIPTION	DWN	DES	CHKD	SUB	APP
1	7/7/14	U		REVISED GENERAL NOTE 4, ADDED NOTE 5					

AECOM

RLWTF-UP LOW LEVEL WASTE SUBPROJECT

MECHANICAL PIPING PLAN – NORTH

BLDG. 230 TA-50

DRAWN	V DAVISON
DESIGN	B SHREEVE
CHECKED	C MOYERS
DATE	5/8/14

SUBMITTED: MANNY TARIN

APPROVED FOR RELEASE: ED ARTIOLIA

Los Alamos NATIONAL LABORATORY PO Box 1663 Los Alamos, New Mexico 87545

SHEET M-1105

265 OF 434

CLASSIFICATION | REVIEWER | DATE

PROJECT ID 100761 | DRAWING NO C55864 | REV 1

M. EVELYN ROGERS NEW MEXICO 22164 PROFESSIONAL ENGINEER

File Location: W:\RLWTF LOW-LEVEL WASTE FACILITY\500 CAD\C55864 MAIN BUILDING\SHEETS\15 MECHANICAL\55864-M-1105-R1.DWG
Plotted By: BROCKMAN, DIRLENE Plot Date: Thursday, July 03, 2014

12315

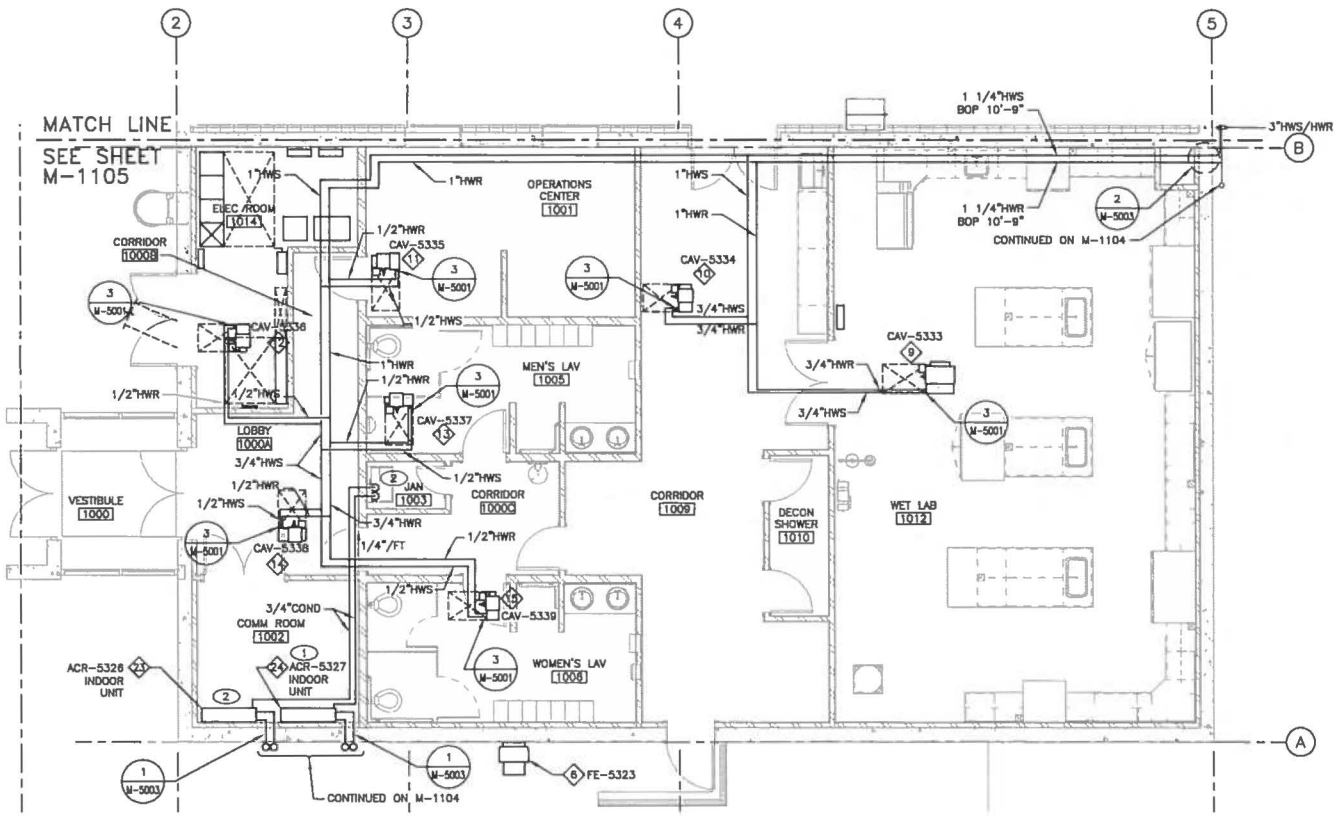

MECHANICAL PIPING PLAN – SOUTH

1/4"=1'-0"

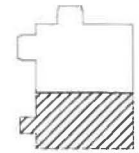

KEY PLAN
SCALE: NONE

GENERAL NOTES

1. IF THIS SHEET IS NOT 24"x 36", THEN IT IS A REDUCED SIZE PLOT. USE GRAPHIC SCALE ACCORDINGLY.
2. SEE SHEETS M-7000 THROUGH M-7006 FOR MECHANICAL EQUIPMENT LIST.
3. FINISHED FLOOR ELEVATION 100'-0" = 7265.00 FT.
4. SEISMIC SUPPORTS, SWAY BRACING, ETC. SHALL BE DESIGNED AND INSTALLED PER SPECIFICATION 22 0548.
5. NON-SEISMIC SUPPORTS AND/OR HANGERS SHALL BE INSTALLED PER SPECIFICATION 22 0529.

KEYED NOTES

1. MOUNT BOTTOM OF INDOOR UNIT 9'-4" AFF.
2. ROUTE CONDENSATE FROM ACR-5326 AND ACR-5327 AND SPILL TO MOP SINK IN JANITOR'S CLOSET.

NO	DATE	CLASS REV	ADC	DESCRIPTION	DWN	DES	CHKD	SUB	APP
1	7/7/14	U		REVISED GENERAL NOTE 4, ADDED NOTE 5					

AECOM

RLWTF-UP LOW LEVEL WASTE SUBPROJECT

MECHANICAL PIPING PLAN – SOUTH

BLDG. 230 TA-50

DRAWN	V DAVISON
DESIGN	B SHREEVE
CHECKED	C MOYERS
DATE	5/8/14

SUBMITTED: MANNY TARIN

APPROVED FOR RELEASE: ED ARTIGLIA

Los Alamos NATIONAL LABORATORY PO Box 1663 Los Alamos, New Mexico 87545

SHEET M-1106

266 OF 434

CLASSIFICATION | REVIEWER | DATE

PROJECT ID 100761 | DRAWING NO C55864 | REV 1

M. EVELYN ROGERS NEW MEXICO 22164 PROFESSIONAL ENGINEER 1-7-14

File Location: W:\RLWTF LOW-LEVEL WASTE FACILITY\300 CAD\C55864 MAIN BUILDING\SHEETS\15 MECHANICAL\55864-M-1106-R1.DWG
Plotted By: CALLISTO, ALAN Plot Date: Thursday, July 03, 2014

12317

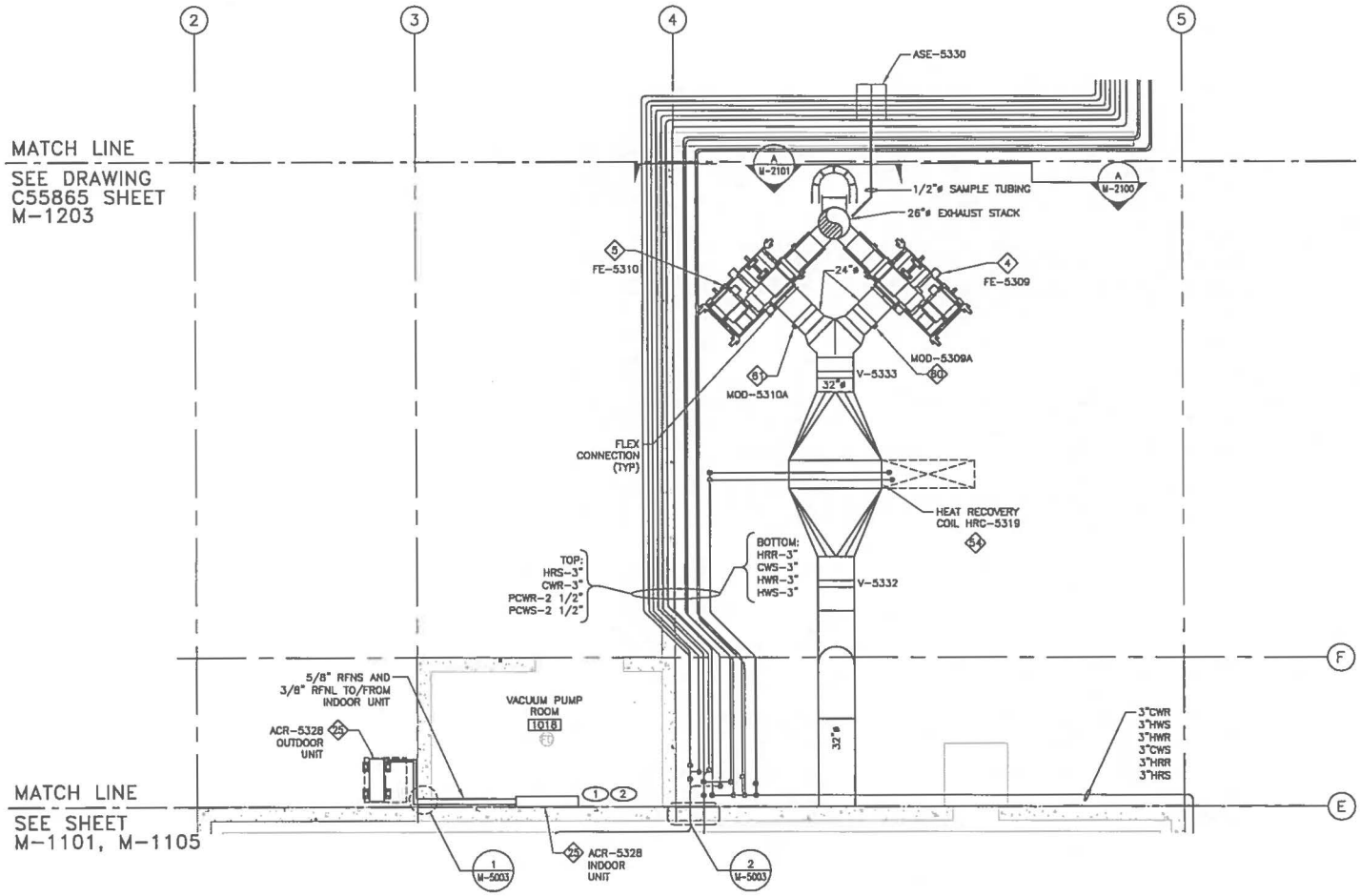

HVAC PLAN – EXTERIOR

1/4"=1'-0"

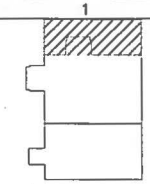

KEY PLAN
SCALE: NONE

GENERAL NOTES

1. IF THIS SHEET IS NOT 24"x 36", THEN IT IS A REDUCED SIZE PLOT. USE GRAPHIC SCALE ACCORDINGLY.
2. SEE SHEETS M-7000 THROUGH M-7006 FOR MECHANICAL EQUIPMENT LIST.
3. SEISMIC SUPPORTS, SWAY BRACING, ETC. SHALL BE DESIGNED AND INSTALLED PER SPECIFICATION 22 0548.
4. NON-SEISMIC SUPPORTS AND/OR HANGERS SHALL BE INSTALLED PER SPECIFICATION 22 0529.

KEYED NOTES

1. MOUNT INDOOR UNIT 9'-0" AFF.
2. ROUTE CONDENSATE FROM ACR-5328 TO DRIP PAN ON FLOOR.

NO	DATE	CLASS REV	ADC	DESCRIPTION	DWN	DES	CHKD	SUB	APP
1	7/7/14	U		REVISED GENERAL NOTES, ADDED NOTE 4					

AECOM

RLWTF-UP LOW LEVEL WASTE SUBPROJECT

MECHANICAL PLAN – EXTERIOR

BLDG. 230 TA-50

DRAWN	V DAVISON
DESIGN	B SHREEVE
CHECKED	C MOYERS
DATE	5/8/14

SUBMITTED: MANNY TARIN

APPROVED FOR RELEASE: ED ARTIGLIA

Los Alamos NATIONAL LABORATORY PO Box 1663 Los Alamos, New Mexico 87545

SHEET M-1107

267 OF 434

CLASSIFICATION | REVIEWER | DATE

PROJECT ID 100761 | DRAWING NO C55864 | REV 1

M. EVELYN ROGERS NEW MEXICO 22184 PROFESSIONAL ENGINEER

File Location: W:\RLWTF LOW-LEVEL WASTE FACILITY\500 CAD\C55864 MAIN BUILDING\SHEETS\15 MECHANICAL\55864-M-1107-R1.DWG
Plotted By: BROSMAN, DARLING; Plot Date: Thursday, July 03, 2014

12318

GENERAL NOTES

1. IF THIS SHEET IS NOT 24"x 36", THEN IT IS A REDUCED SIZE PLOT. USE GRAPHIC SCALE ACCORDINGLY.
2. SEE SHEETS M-7000 THROUGH M-7006 FOR MECHANICAL EQUIPMENT LIST.

KEYED NOTES

(1) VERIFY DIMENSIONS WITH FAN MANUFACTURER.

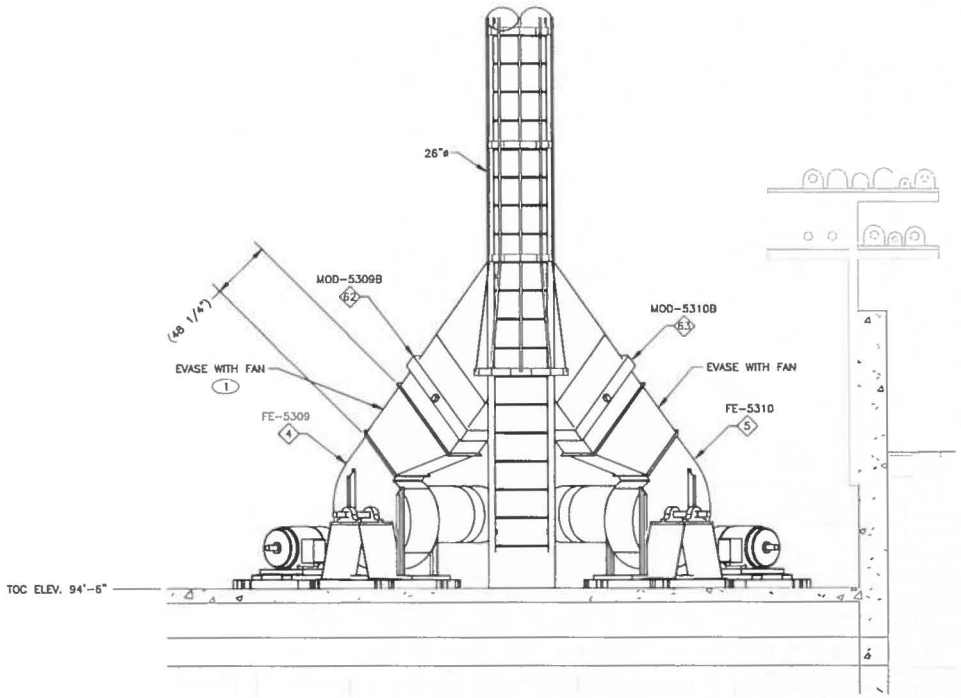

A M-1107 EXHAUST FAN ELEVATION

1/2"=1'-0"

NO	DATE	CLASS REV	ADC	DESCRIPTION	DWN	DES	CHKD	SUB	APP

AECOM

RLWTF-UP LOW LEVEL WASTE SUBPROJECT

EXHAUST FAN ELEVATION

BLDG. 230 TA-50

DRAWN	V DAVISON
DESIGN	B SHREEVE
CHECKED	C MOYERS
DATE	5/8/14

SUBMITTED MANNY TARIN

APPROVED FOR RELEASE ED ARTIGLIA

Los Alamos NATIONAL LABORATORY PO Box 1663 Los Alamos, New Mexico 87545

SHEET M-2100

268 OF 434

CLASSIFICATION | REVIEWER | DATE

PROJECT ID 100761 | DRAWING NO C55864 | REV 0

CHARLES MOYERS NEW MEXICO 18838 LICENSED PROFESSIONAL ENGINEER

05-08-14

File Location: P:\RLWTF LOW-LEVEL WASTE FACILITY\500 CAD\C55864 MAIN BUILDING\SHEETS\15 MECHANICAL\55864-M-2100-R0.DWG
Plotted By: MOORE, STEPHEN Plot Date: Monday, May 05, 2014

: 12319

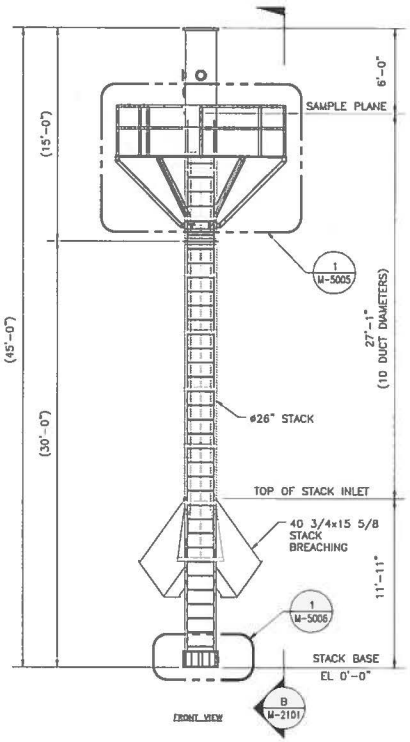

A M-1107 SOUTH ELEVATION

0' 1' 2' 4' 6' 8'

1/4"=1'-0"

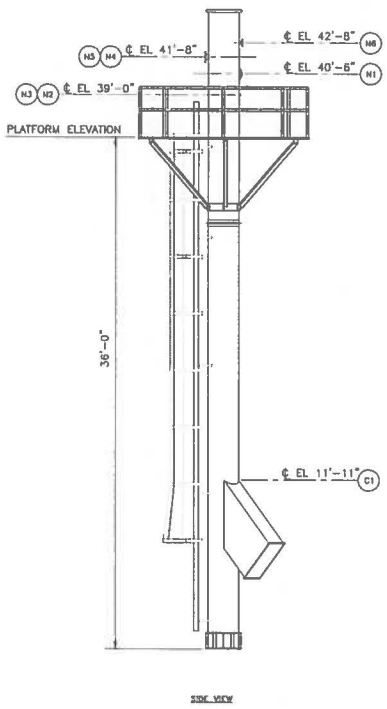

B M-2101 WEST ELEVATION

0' 1' 2' 4' 6' 8'

1/4"=1'-0"

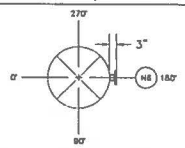

NOZZLE ORIENTATION @ ℄ 42'-8"

1' 6" 0 1' 2' 3'

1/2"=1'-0"

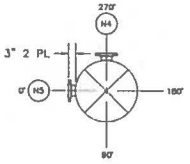

NOZZLE ORIENTATION @ ℄ 41'-8"

1' 6" 0 1' 2' 3'

1/2"=1'-0"

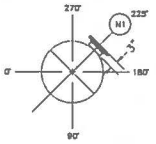

NOZZLE ORIENTATION @ ℄ 40'-6"

1' 6" 0 1' 2' 3'

1/2"=1'-0"

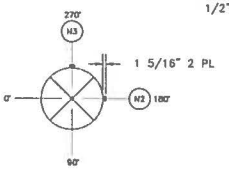

NOZZLE ORIENTATION @ ℄ 39'-0"

1' 6" 0 1' 2' 3'

1/2"=1'-0"

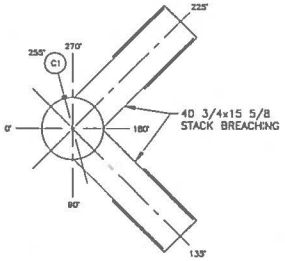

NOZZLE ORIENTATION @ ℄ 11'-11"

1' 6" 0 1' 2' 3'

1/2"=1'-0"

GENERAL NOTES

1. IF THIS SHEET IS NOT 24"x 36", THEN IT IS A REDUCED SIZE PLOT. USE GRAPHIC SCALE ACCORDINGLY.
2. SEE SPECIFICATION SECTION 23, 5100, VENTS AND STACKS FOR MATERIALS, DESIGN, FABRICATION AND INSTALLATION.

	NOZZLE SIZE	SERVICE/CONFIGURATION
N1	6" FLANGE 150# RF	SHROUDED PROBE W/BLIND FLANGE
N2	1" THREADED CLASS 3000 BONNEY FORGE FLEXOLET	MANUAL VELOCITY TRAVERSE W/THREADED PLUG
N3	1" THREADED CLASS 3000 BONNEY FORGE FLEXOLET	MANUAL VELOCITY TRAVERSE W/THREADED PLUG
N4	4" FLANGE 150# RF	AIR FLOW ARRAY W/BLIND FLANGE
N5	4" FLANGE 150# RF	SPARE W/BLIND FLANGE
N6	2" FLANGE 150# RF	THERMOWELL FLANGE
C1	1" HALF COUPLING	PLUGGED

NO	DATE	CLASS REV	ADC	DESCRIPTION	DWN	DES	CHKD	SUB	APP

AECOM

RLWTF-UP LOW LEVEL WASTE SUBPROJECT

STACK ELEVATION

DRAWN V DAVISON

DESIGN B SHREEVE

CHECKED C MOYERS

DATE 5/8/14

BLDG. 230 TA-50

SUBMITTED MANNY TARIN

APPROVED FOR RELEASE ED ARTIGLIA

Los Alamos NATIONAL LABORATORY PO Box 1663 Los Alamos, New Mexico 87545

SHEET M-2101

269 OF 434

CLASSIFICATION REVIEWER DATE

PROJECT ID 100761

DRAWING NO C55864

REV 0

CHARLES MOYERS NEW MEXICO 10838 REGISTERED PROFESSIONAL ENGINEER

05-08-14

12329

File: Logs Mon PARLVTF LOW-LEVEL WASTE FACILITY\530 CAD\C55864 MAIN BUILDING\SHEETS\M3 MECHANICAL\C55864-M-2101-R0.DWG
Plotted By: KOOPE, STEPHEN Plot Date: Monday, May 05, 2014

GENERAL NOTES

1. IF THIS SHEET IS NOT 24"x 36", THEN IT IS A REDUCED SIZE PLOT. USE GRAPHIC SCALE ACCORDINGLY.
2. SEE SHEETS M-7000 THROUGH M-7006 FOR MECHANICAL EQUIPMENT LIST.
3. FINISHED FLOOR ELEVATION 7265.0 = 100'-0".
4. CENTER OF DUCT 14'-0" UNLESS OTHERWISE NOTED.

KEYED NOTES

1. EXHAUST FROM VACUUM PUMP ROOM.
2. EXHAUST FROM VACUUM PUMP SKIDS PV-5001.

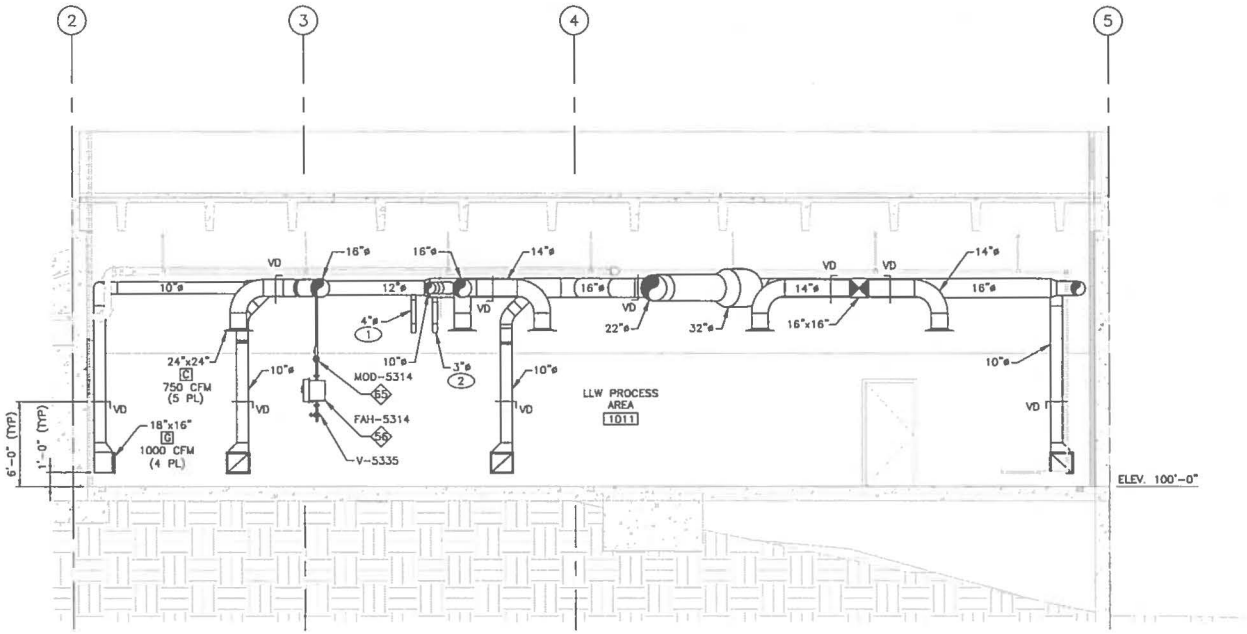

A M-1101 SECTION

1/4"=1'-0"

NO	DATE	CLASS REV	ADC	DESCRIPTION	DWN	DES	CHKD	SUB	APP

AECOM

RLWTF-UP LOW LEVEL WASTE SUBPROJECT

HVAC SECTIONS

BLDG. 230 TA-50

DRAWN	V DAVISON
DESIGN	B SHREEVE
CHECKED	C MOYERS
DATE	5/8/14

SUBMITTED MANNY TARIN

APPROVED FOR RELEASE ED ARTIGLIA

Los Alamos NATIONAL LABORATORY PO Box 1663 Los Alamos, New Mexico 87545

SHEET M-3100

270 OF 434

CLASSIFICATION | REVIEWER | DATE

PROJECT ID 100761 | DRAWING NO C55864 | REV 0

CHARLES MOYERS NEW MEXICO 15838 LICENSED PROFESSIONAL ENGINEER

05-08-14

File Location: P:\RLWTF LOW-LEVEL WASTE FACILITY\500 CAD\C55864 MAIN BUILDING\SHEETS\15 MECHANICAL\55864-M-3100-RD.DWG
Plotted By: MOORE, STEPHEN Plot Date: Monday, May 05, 2014

12321

GENERAL NOTES

1. IF THIS SHEET IS NOT 24"x 36", THEN IT IS A REDUCED SIZE PLOT. USE GRAPHIC SCALE ACCORDINGLY.
2. SEE SHEETS M-7000 THROUGH M-7006 FOR MECHANICAL EQUIPMENT LIST.
3. FINISHED FLOOR ELEVATION 7265.0 = 100'-0".
4. CENTER OF DUCT 14'-0" AFF UNLESS OTHERWISE NOTED.

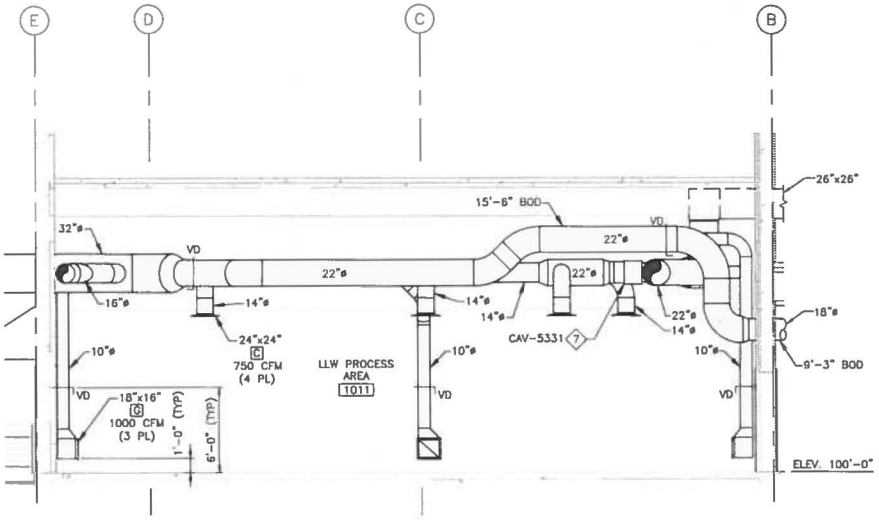

A M-1101 SECTION

1/4"=1'-0"

NO	DATE	CLASS REV	ADC	DESCRIPTION	DWN	DES	CHKD	SUB	APP

AECOM

RLWTF-UP LOW LEVEL WASTE SUBPROJECT

HVAC SECTIONS

BLDG. 230 TA-50

DRAWN	V DAVISON
DESIGN	B SHREEVE
CHECKED	C MOYERS
DATE	5/8/14

SUBMITTED MANNY TARIN

APPROVED FOR RELEASE ED ARTIGLIA

Los Alamos NATIONAL LABORATORY PO Box 1663 Los Alamos, New Mexico 87545

SHEET M-3101

271 OF 434

CLASSIFICATION | REVIEWER | DATE

PROJECT ID 100761 | DRAWING NO C55864 | REV 0

05-08-14

File Location: P:\RLWTF LOW-LEVEL WASTE FACILITY\500 CAD\C55864 MAIN BUILDING\SHEETS\15 MECHANICAL\55864-M-3101-RD.DWG
Plotted By: MOORE, STEPHEN Plot Date: Monday, May 05, 2014

: 12322

GENERAL NOTES

1. IF THIS SHEET IS NOT 24"x 36", THEN IT IS A REDUCED SIZE PLOT. USE GRAPHIC SCALE ACCORDINGLY.
2. SEE SHEETS M-7000 THROUGH M-7006 FOR MECHANICAL EQUIPMENT LIST.
3. FINISHED FLOOR ELEVATION 7265.0 = 100'-0".
4. CENTER OF DUCT 14'-0" AFF UNLESS OTHERWISE NOTED.

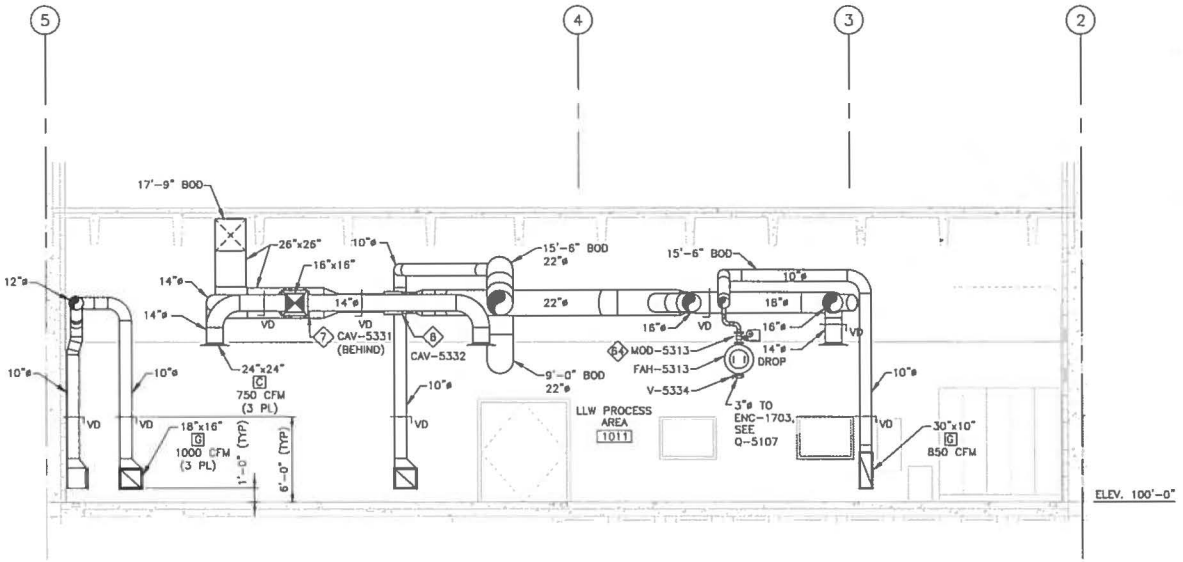

A M-1101 SECTION

0' 1' 2' 4' 6' 8'
1/4"=1'-0"

NO	DATE	CLASS REV	ADC	DESCRIPTION	DWN	DES	CHKD	SUB	APP

AECOM

RLWTF-UP LOW LEVEL WASTE SUBPROJECT

HVAC SECTIONS

BLDG. 230 TA-50

DRAWN	V DAWSON
DESIGN	B SHREEVE
CHECKED	C MOYERS
DATE	5/8/14

SUBMITTED MANNY TARIN

APPROVED FOR RELEASE ED ARTIGLIA

Los Alamos NATIONAL LABORATORY PO Box 1663 Los Alamos, New Mexico 87545

SHEET M-3102

272 OF 434

CLASSIFICATION | REVIEWER | DATE

PROJECT ID 100761 | DRAWING NO C55864 | REV 0

CHARLES MOYERS NEW MEXICO 18828 LICENSED PROFESSIONAL ENGINEER

05-08-14

File Location: P:\RLWTF LOW-LEVEL WASTE FACILITY\500 CAD\C55864 MAIN BUILDING\SHEETS\15 MECHANICAL\55864-M-3102-R0.DWG
Plotted By: MOORE, STEPHEN Plot Date: Monday, May 05, 2014

: 12323

GENERAL NOTES

1. IF THIS SHEET IS NOT 24"x 36", THEN IT IS A REDUCED SIZE PLOT. USE GRAPHIC SCALE ACCORDINGLY.
2. SEE SHEETS M-7000 THROUGH M-7006 FOR MECHANICAL EQUIPMENT LIST.
3. FINISHED FLOOR ELEVATION 7265.0 = 100'-0".
4. CENTER OF DUCT 14'-0" AFF UNLESS OTHERWISE NOTED.

KEYED NOTES

(1) FIRE RISER ROOM EXHAUST.

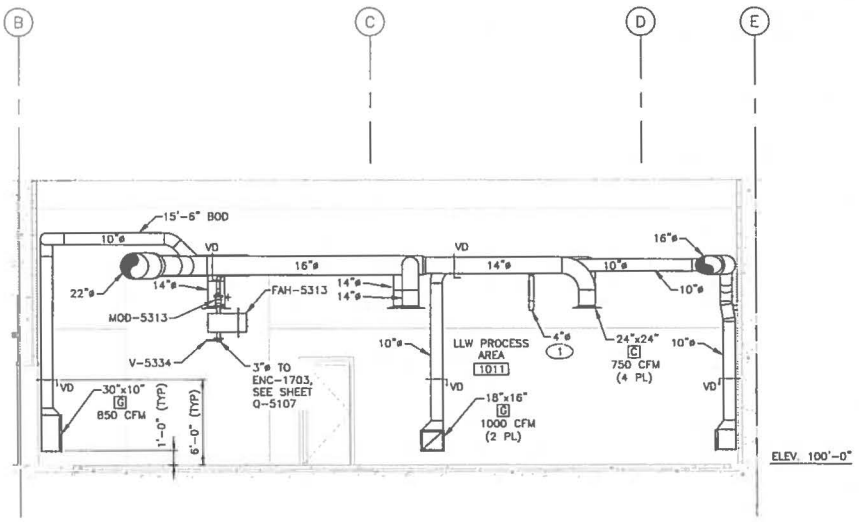

A M-1101 SECTION

1/4"=1'-0"

NO	DATE	CLASS REV	ADC	DESCRIPTION	DWN	DES	CHKD	SUB	APP

AECOM

RLWTF-UP LOW LEVEL WASTE SUBPROJECT

HVAC SECTIONS

BLDG. 230 TA-50

DRAWN	V DAVISON
DESIGN	B SHREEVE
CHECKED	C MOYERS
DATE	5/8/14

SUBMITTED MANNY TARIN

APPROVED FOR RELEASE ED ARTIGLIA

Los Alamos NATIONAL LABORATORY PO Box 1663 Los Alamos, New Mexico 87545

SHEET M-3103

273 OF 434

CLASSIFICATION | REVIEWER | DATE

PROJECT ID 100761 | DRAWING NO C55864 | REV 0

CHARLES MOYERS NEW MEXICO 18836 LICENSED PROFESSIONAL ENGINEER

05-08-14

File Location: P:\RLWTF LOW-LEVEL WASTE FACILITY\500 CAD\C55864 MAIN BUILDING\SHEETS\15 MECHANICAL\55864-M-3103-R0.DWG
Plotted By: MOORE, STEPHEN Plot Date: Monday, May 05, 2014

12324

GENERAL NOTES

1. IF THIS SHEET IS NOT 24"x 36", THEN IT IS A REDUCED SIZE PLOT. USE GRAPHIC SCALE ACCORDINGLY.
2. SEE SHEETS M-7000 THROUGH M-7006 FOR MECHANICAL EQUIPMENT LIST.
3. FINISHED FLOOR ELEVATION 7265.0 = 100'-0".
4. CENTER OF DUCT 10'-4" AFF UNLESS OTHERWISE NOTED.

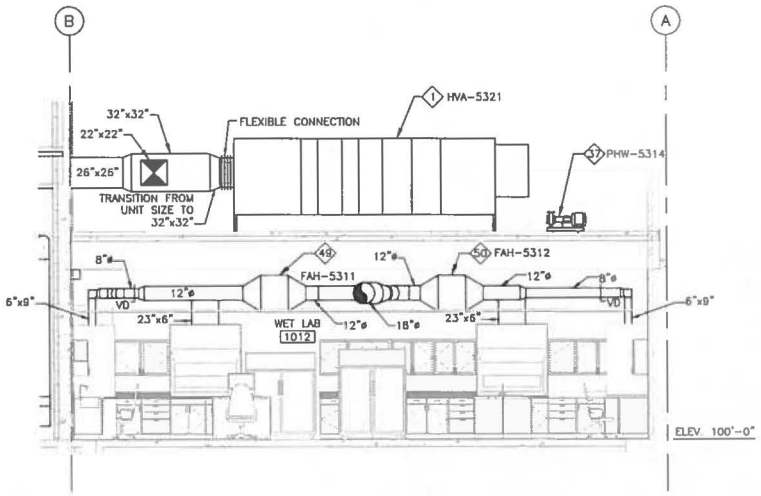

A M-1102 A M-1104 SECTION

0' 1' 2' 4' 6' 8'
1/4"=1'-0"

NO	DATE	CLASS REV	ADC	DESCRIPTION	DWN	DES	CHKD	SUB	APP

AECOM

RLWTF-UP LOW LEVEL WASTE SUBPROJECT

HVAC SECTIONS

BLDG. 230 TA-50

DRAWN	V DAVISON
DESIGN	B SHREEVE
CHECKED	C MOYERS
DATE	5/8/14

SUBMITTED MANNY TARIN

APPROVED FOR RELEASE ED ARTIGUA

Los Alamos NATIONAL LABORATORY PO Box 1663 Los Alamos, New Mexico 87545

SHEET M-3104

274 OF 434

CLASSIFICATION REVIEWER DATE

PROJECT ID 100761

DRAWING NO C55864

REV 0

CHARLES MOYERS NEW MEXICO 18836 LICENSED PROFESSIONAL ENGINEER

05-08-14

File Location: P:\RLWTF LOW-LEVEL WASTE FACILITY\500 CAD\C55864 MAIN BUILDING\SHEETS\15 MECHANICAL\55864-M-3104-R0.DWG
Plotted By: MOORE, STEPHEN Plot Date: Monday, May 05, 2014

: 12325

GENERAL NOTES

1. IF THIS SHEET IS NOT 24"x 36", THEN IT IS A REDUCED SIZE PLOT. USE GRAPHIC SCALE ACCORDINGLY.
2. SEE SHEETS M-7000 THROUGH M-7006 FOR MECHANICAL EQUIPMENT LIST.
3. FINISHED FLOOR ELEVATION 7265.0 = 100'-0".
4. CENTER OF DUCT 10'-9" AFF UNLESS OTHERWISE NOTED.

KEYED NOTES

(1) CENTER OF DUCT 10'-4" AFF.

(2) EXHAUST PORT FOR MASS SPEC TORCH BOX (100 CFM) SEE M-5004.

(3) CONNECTS TO HVA-5322 BEHIND HVA-5321.

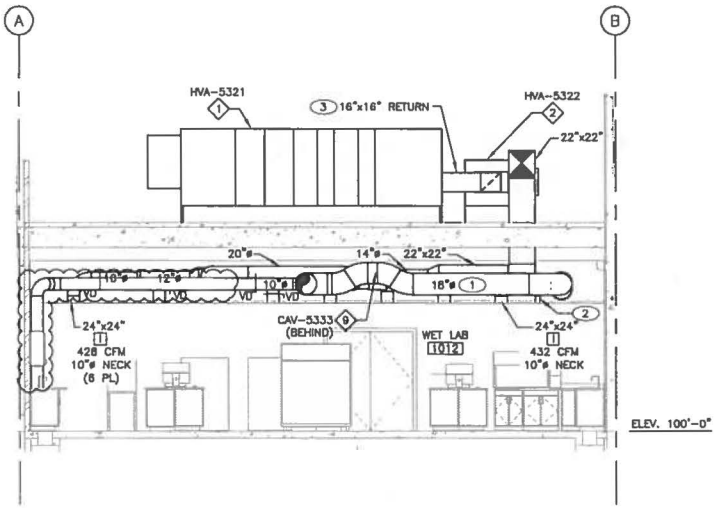

A M-1104 / A M-1102 SECTION

0" 1" 2" 4" 6" 8"

1/4"=1'-0"

NO	DATE	CLASS REV	ADC	DESCRIPTION	DRN	DES	CHKD	SUB	APP
1	7/7/14	U		REVISED EXHAUST					

AECOM

RLWTF-UP LOW LEVEL WASTE SUBPROJECT

HVAC SECTIONS

BLDG. 230 TA-50

DRAWN	V DAVISON
DESIGN	B SHREEVE
CHECKED	C MOYERS
DATE	8/8/14

SUBMITTED: MANNY TARIN

APPROVED FOR RELEASE: ED ARTIGLIA

Los Alamos NATIONAL LABORATORY PO Box 1663 Los Alamos, New Mexico 87545

CLASSIFICATION | REVIEWER | DATE

PROJECT ID: 100761

DRAWING NO: C55864

SHEET: M-3105

275 OF 434

REV: 1

CHARLES MOYERS NEW MEXICO 18936 REGISTERED PROFESSIONAL ENGINEER 7-7-14

12326

File Location: W:\RLWTF LOW-LEVEL WASTE FACILITY\500 CAD\C55864 MAIN BUILDING\SHEETS\13 MECHANICAL\55864-M-3105-R1.DWG
Plotted By: BROEMAN, DARLENE Plot Date: Wednesday, July 02, 2014

GENERAL NOTES

1. IF THIS SHEET IS NOT 24"x 36", THEN IT IS A REDUCED SIZE PLOT. USE GRAPHIC SCALE ACCORDINGLY.
2. SEE SHEETS M-7000 THROUGH M-7006 FOR MECHANICAL EQUIPMENT LIST.
3. FINISHED FLOOR ELEVATION 7265.0 = 100'-0".

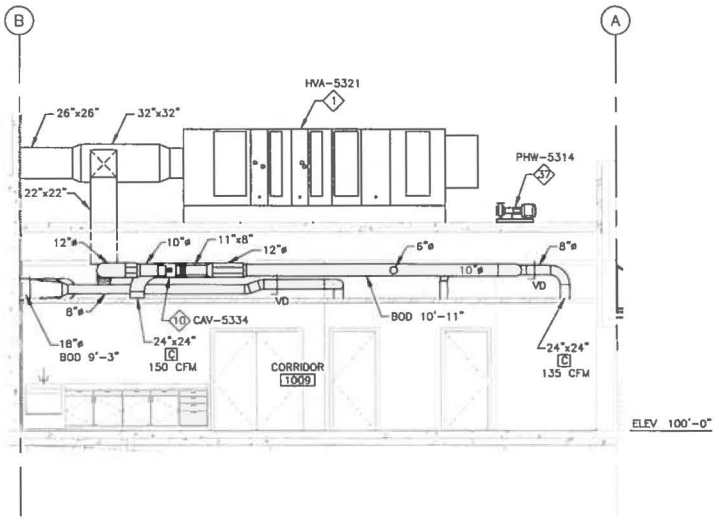

A/M-1102 A/M-1104 SECTION

0' 1' 2' 4' 6' 8'

1/4"=1'-0"

NO	DATE	CLASS REV	ADC	DESCRIPTION	DWN	DES	CHKD	SUB	APP

AECOM

RLWTF-UP LOW LEVEL WASTE SUBPROJECT

HVAC SECTIONS

DRAWN	V DAVISON
DESIGN	B SHREEVE
CHECKED	C MOYERS
DATE	5/8/14

BLDG. 230 TA-50

SUBMITTED MANNY TARIN

APPROVED FOR RELEASE ED ARTIGLIA

Los Alamos NATIONAL LABORATORY PO Box 1663 Los Alamos, New Mexico 87545

SHEET M-3106

276 OF 434

CLASSIFICATION REVIEWER DATE

PROJECT ID 100761

DRAWING NO C55864

REV 0

CHARLES MOYERS NEW MEXICO 18038 REGISTERED PROFESSIONAL ENGINEER 05-01-14

12227

File Location: P:\RLWTF LOW-LEVEL WASTE FACILITY\500 CAD\C55864 MAIN (BUILDING)\SHEETS\15 MECHANICAL\55864-M-3106-R0.DWG
Plotted By: MOYER, STEPHEN Plot Date: Monday, May 05, 2014

GENERAL NOTES

1. IF THIS SHEET IS NOT 24"x 36", THEN IT IS A REDUCED SIZE PLOT. USE GRAPHIC SCALE ACCORDINGLY.
2. SEE SHEETS M-7000 THROUGH M-7006 FOR MECHANICAL EQUIPMENT LIST.
3. FINISHED FLOOR ELEVATION 7265.0 = 100'-0".

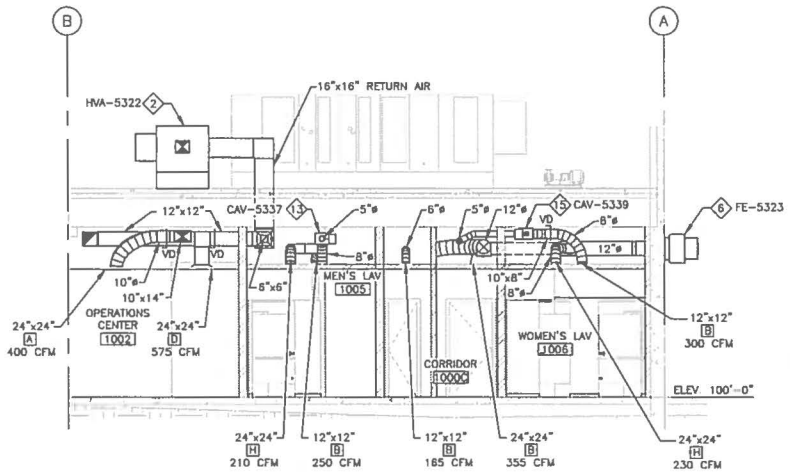

A M-1104 A M-4100 A M-1102 SECTION

0' 1' 2' 4' 8' 8'

1/4"=1'-0"

NO	DATE	CLASS REV	ADC	DESCRIPTION	DWN	DES	CHKD	SUB	APP

AECOM

RLWTF-UP LOW LEVEL WASTE SUBPROJECT

HVAC SECTIONS

DRAWN	S MOORE
DESIGN	B SHREEVE
CHECKED	C MOYERS
DATE	5/8/14

BLDG. 230 TA-50

SUBMITTED MANNY TARIN

APPROVED FOR RELEASE ED ARTIGLIA

Los Alamos NATIONAL LABORATORY PO Box 1663 Los Alamos, New Mexico 87545

SHEET M-3107

277 OF 434

CLASSIFICATION REVIEWER DATE

PROJECT ID 100761

DRAWING NO C55864

REV 0

CHARLES MOYERS 18538 NEW MEXICO REGISTERED PROFESSIONAL ENGINEER 05-09-14

12328

File Location: P:\RLWTF LOW-LEVEL WASTE FACILITY\300 CAD\C55864 MAIN BUILDING\SHEETS\13 MECHANICAL\55864-M-3107-R0.DWG
Plotted By: MOORE, STEPHEN Plot Date: Monday, May 05, 2014

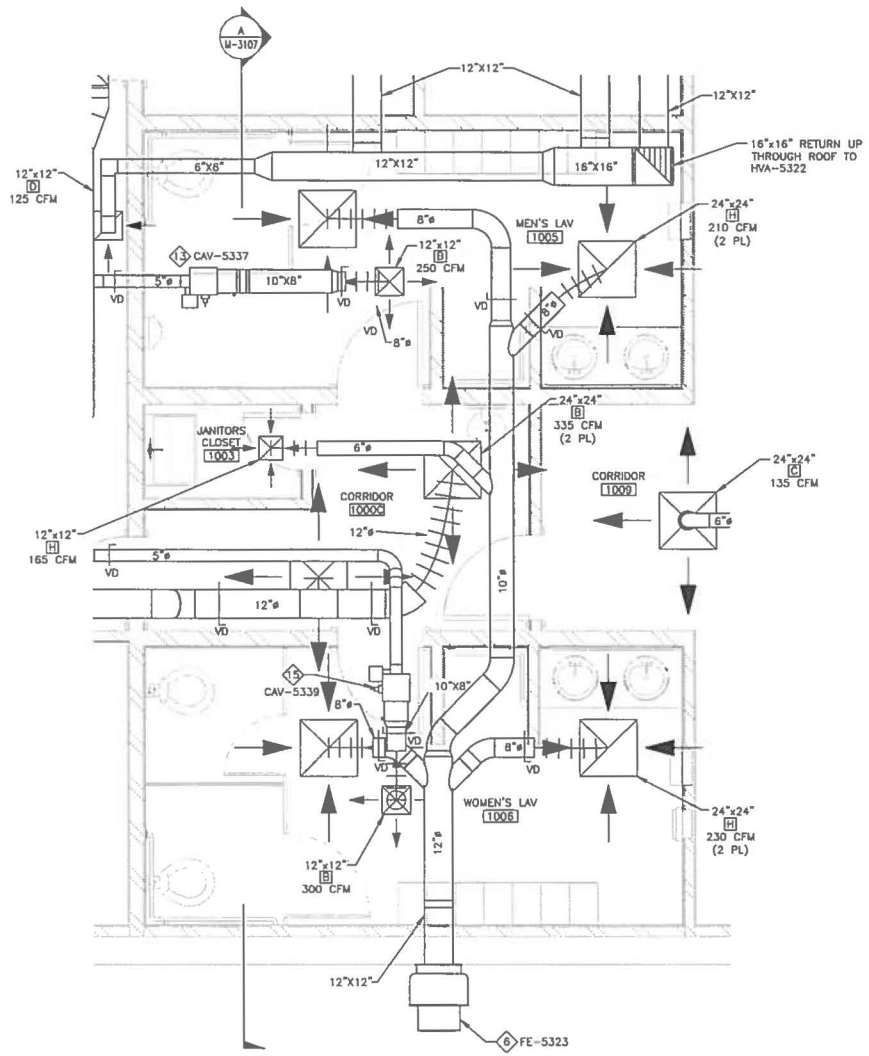

1 M-1102 HVAC ENLARGED PLAN

1/2"=1'-0"

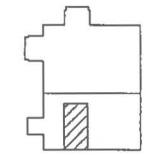

KEY PLAN
SCALE: NONE

GENERAL NOTES

1. IF THIS SHEET IS NOT 24"x 36", THEN IT IS A REDUCED SIZE PLOT. USE GRAPHIC SCALE ACCORDINGLY.
2. SEE SHEETS M-7000 THROUGH M-7006 FOR MECHANICAL EQUIPMENT LIST.

NO	DATE	CLASS REV	ADC	DESCRIPTION	DWN	DES	CHKD	SUB	APP

AECOM

RLWTF-UP LOW LEVEL WASTE SUBPROJECT

HVAC ENLARGED PLAN

BLDG. 230 TA-50

DRAWN	V DAVISON
DESIGN	B SHREEVE
CHECKED	C MOYERS
DATE	5/8/14

SUBMITTED: MANNY TARIN

APPROVED FOR RELEASE: ED ARTIGLIA

Los Alamos NATIONAL LABORATORY PO Box 1663 Los Alamos, New Mexico 87545

SHEET M-4100

278 OF 434

CLASSIFICATION | REVIEWER | DATE

PROJECT ID 100761 | DRAWING NO C55864 | REV 0

CHARLES MOYERS NEW MEXICO 16838 LICENSED PROFESSIONAL ENGINEER

05-08-14

File Location: P:\RLWTF LOW-LEVEL WASTE FACILITY\500 CAD\C55864 MAIN BUILDING\SHEETS\15 MECHANICAL\55864-M-4100-R0.DWG
Plotted By: MOORE, STEPHEN Plot Date: Monday, May 05, 2014

: 12329

SYSTEM NUMBER W-J-7104

F RATING – 2 HOURS

T RATING – 2 HOUR

(1) WALL ASSEMBLY – MIN. 6 INCH THICK REINFORCED LIGHTWEIGHT OR NORMAL WEIGHT (100–150 PCF OR 1600–2400 KG/M³) MAX SIZE OF OPENING IF 17.3 SQ FT WITH A MAX WIDTH OF 89 INCHES.

(2) STEEL AIR DUCTS – MAXIMUM 85 BY 24 INCH BY 0.030 INCH THICK (22 GA) STAINLESS STEEL DUCT TO BE INSTALLED EITHER CONCENTRICALLY OR ECCENTRICALLY WITHIN THE OPENING. THE ANNULAR SPACE SHALL BE MINIMUM 1 INCH TO MAXIMUM 3 INCH WITHIN FRAMED OPENING. THE DUCT SHALL BE CONSTRUCTED AND REINFORCED AT A MINIMUM IN ACCORDANCE WITH SMACNA HVAC DUCT CONSTRUCTION STANDARDS – METAL AND FLEXIBLE. STEEL DUCT TO BE RIGIDLY SUPPORTED ON BOTH SIDES OF WALL ASSEMBLY.

(3) DUCT WRAP MATERIALS* – NOM 1–1/2 INCH THICK CERAMIC FIBER BATT OR BLANKET (MIN 6 PCF OR 96 KG/M³) JACKETED ON THE OUTSIDE WITH A FOIL–SCRIM–POLY FACING, INSTALLED IN A TELESCOPE, CHECKERBOARD OR BUTT–JOINT–AND–COLLAR PATTERN WITH 3 INCH TRANSVERSE AND LONGITUDINAL OVERLAPS, IN ACCORDANCE WITH THE REQUIREMENTS OF VENTILATION ASSEMBLY NO. V–27, SEE VENTILATION DUCT ASSEMBLIES IN VOL. 2 OF THE UL FIRE RESISTANCE DIRECTORY. LONGITUDINAL TRANSVERSE JOINTS SEALED WITH ALUMINUM FOIL TAPE.

3M FIRE PROTECTION PRODUCTS – 3M FIREBARRIER DUCT WRAP 615 OR 3M FIREBARRIER DUCT WRAP 615+

(4) FIRESTOP SYSTEM – THE FIRESTOP SYSTEM SHALL CONSIST OF THE FOLLOWING:

A. PACKING MATERIAL – MINIMUM 4–3/4 INCH THICKNESS OF MINIMUM 6 PCF DUCT INSULATION FIRMLY PACKED INTO OPENING AS A PERMANENT FORM. PACKING MATERIAL TO BE RECESSED FROM BOTH SURFACES OF WALL AS REQUIRED TO ACCOMMODATE THE REQUIRED THICKNESS OF FILL MATERIAL.

B. FILL VOID OR CAVITY MATERIAL* SEALANT – MINIMUM 5/8 INCH THICKNESS OF FILL MATERIAL APPLIED WITHIN ANNULUS, FLUSH WITH BOTH SURFACES OF WALL.

3M FIRE PROTECTION PRODUCTS – 3M FB–1000 NS

STEEL RETAINING ANGLES – STIFFENING ANGLES 1–1/2 BY 2 BY 1/8 INCH, APPLIED AROUND THE PERIMETER OF THE DUCT WITH THE 2 INCH LEG AGAINST THE SEALANT. ANGLES ATTACHED TO STEEL DUCT ON BOTH SIDES OF WALL WITH MINIMUM 1/8" LAP WELD, 1–INCH LONG ON 6–INCH CENTERS.

*BEARING THE UL CLASSIFICATION MARK.

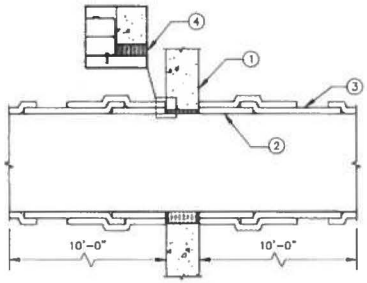

SECTION VIEW

1 / M-1101 DUCT FIRE RATED WALL PENETRATION DETAIL

SCALE: NONE

NO	DATE	CLASS REV	ADC	DESCRIPTION	DWN	DES	CHKD	SUB	APP

AECOM

RLWTF–UP LOW LEVEL WASTE SUBPROJECT

MECHANICAL DETAILS

BLDG. 230 TA–50

DRAWN	V DAWSON
DESIGN	B SHREEVE
CHECKED	C MOYERS
DATE	5/8/14

SUBMITTED MANNY TARIN

APPROVED FOR RELEASE ED ARTIGLIA

Los Alamos NATIONAL LABORATORY PO Box 1663 Los Alamos, New Mexico 87545

SHEET M–5000

279 OF 434

CLASSIFICATION REVIEWER DATE

PROJECT ID 100761 DRAWING NO C55864 REV 0

CHARLES MOYERS NEW MEXICO 10838 REGISTERED PROFESSIONAL ENGINEER 05-07-14

File Location: P:\RLWTF LOW-LEVEL WASTE FACILITY\500 CAD\C55864 MAIN BUILDING\SHEETS\15 MECHANICAL\55864-M-5000-R0.DWG
Plotted By: MOORE, STEPHEN Plot Date: Monday, May 05, 2014

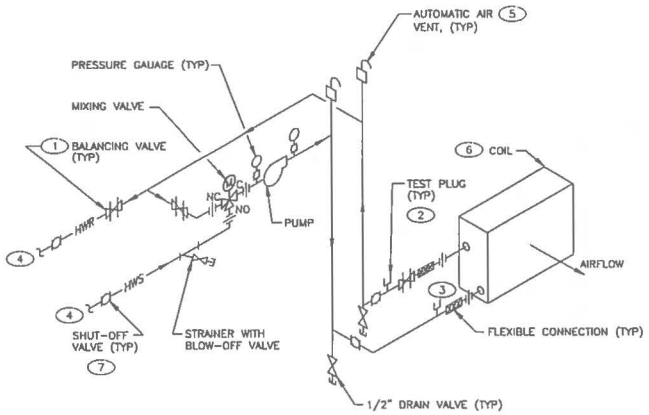

ISOMETRIC VIEW

1 M-1104 HOT WATER COIL PIPING DETAIL
(CONSTANT FLOW THROUGH COIL, FAIL TO FULL HEAT)
SCALE: NONE

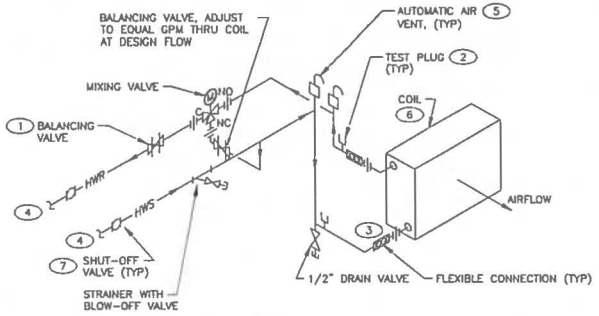

ISOMETRIC VIEW

2 M-1104 HOT WATER COIL PIPING DETAIL
(VARIABLE FLOW THROUGH COIL, FAIL TO FULL HEAT)
SCALE: NONE

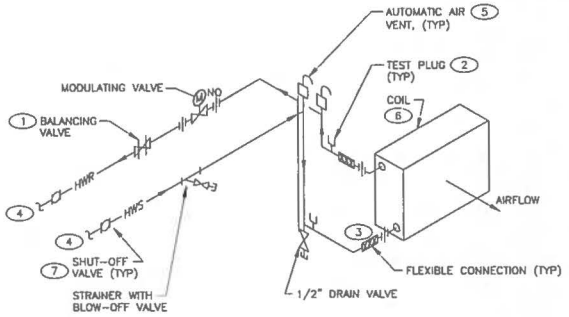

ISOMETRIC VIEW

3 M-1105 3 M-1106 HOT WATER COIL 2-WAY VALVE PIPING DETAIL
(VARIABLE FLOW THROUGH COIL, FAIL TO FULL HEAT)
SCALE: NONE

KEYED NOTES:

1. INSTALL BALANCING VALVE WITH MINIMUM OF 3 STRAIGHT PIPE DIAMETERS UPSTREAM AND 1 STRAIGHT PIPE DIAMETER DOWNSTREAM.
2. MAINTAIN 6" MINIMUM CLEARANCE ABOVE TEST PLUG TO ALLOW GAUGE TO BE INSERTED. DO NOT COVER PLUG WITH INSULATION.
3. INSTALL FLEX CONNECTION AT COIL CONNECTIONS.
4. CONNECT BRANCH LINES FROM COIL INTO TOP OR SIDE OF SUPPLY AND RETURN MAINS. CONNECTING INTO BOTTOM OF MAIN IS NOT ACCEPTABLE.
5. INSTALL AUTOMATIC AIR VENTS IN SUPPLY AND RETURN COIL BRANCH PIPING AS FOLLOWS:
   A) IN PIPING HIGH POINT WHEN PIPING IS ABOVE MAIN.
   B) CLOSE TO COIL WHEN PIPING IS NOT ABOVE MAIN (SIDE CONNECTION).
6. INSTALL COIL SO AIR PASSES THROUGH FINS IN PROPER DIRECTION NOTED ON COIL.
7. BALL VALVE IS TYPICAL, HOWEVER, VALVE TYPE IS DETERMINED ON P&ID.

NO	DATE	CLASS REV	ADC	DESCRIPTION	DWN	DES	CHKD	SUB	APP

AECOM

RLWTF-UP LOW LEVEL WASTE SUBPROJECT

MECHANICAL COIL PIPING DETAILS

BLDG. 230 TA-50

DRAWN	V DAVISON
DESIGN	B SHREEVE
CHECKED	C MOYERS
DATE	5/8/14

SUBMITTED MANNY TARIN

APPROVED FOR RELEASE ED ARTIGLIA

Los Alamos NATIONAL LABORATORY PO Box 1663 Los Alamos, New Mexico 87545

SHEET M-5001

280 OF 434

CLASSIFICATION | REVIEWER | DATE

PROJECT ID 100761 | DRAWING NO C55864 | REV 0

CHARLES MOYERS NEW MEXICO 15838 LICENSED PROFESSIONAL ENGINEER

05-08-14

File Location: P:\RLWTF LOW-LEVEL WASTE FACILITY\500 CAD\C55864 MAIN BUILDING\SHEETS\15 MECHANICAL\55864-M-5001-RD.DWG
Plotted By: DAVISON, VANESSA; Plot Date: Wednesday, May 07, 2014

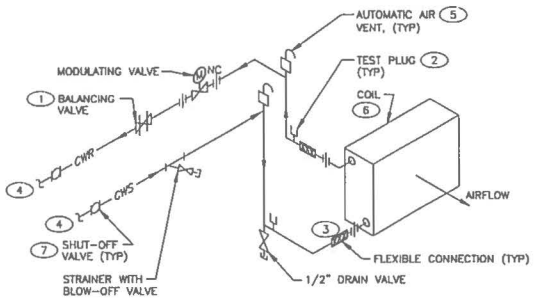

ISOMETRIC VIEW

1 M-1104 CHILLED WATER COIL PIPING DETAIL

(VARIABLE FLOW THROUGH COIL, FAIL TO NO COOLING)

SCALE: NONE

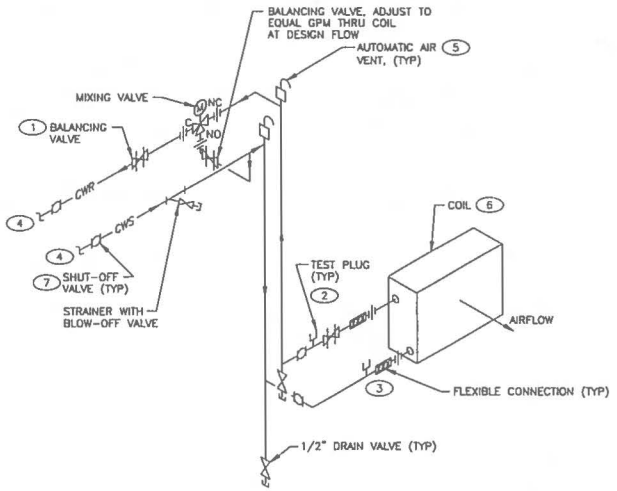

ISOMETRIC VIEW

2 M-1104 CHILLED WATER COIL PIPING DETAIL

(VARIABLE FLOW THROUGH COIL, FAIL TO NO COOLING)

SCALE: NONE

KEYED NOTES:

1. INSTALL BALANCING VALVE WITH MINIMUM OF 3 STRAIGHT PIPE DIAMETERS UPSTREAM AND 1 STRAIGHT PIPE DIAMETER DOWNSTREAM.
2. MAINTAIN 6" MINIMUM CLEARANCE ABOVE TEST PLUG TO ALLOW GAUGE TO BE INSERTED. DO NOT COVER PLUG WITH INSULATION.
3. INSTALL FLEXIBLE CONNECTION AT COIL CONNECTIONS.
4. CONNECT BRANCH LINES FROM COIL INTO TOP OR SIDE OF SUPPLY AND RETURN MAINS. CONNECTING INTO BOTTOM OF MAIN IS NOT ACCEPTABLE.
5. INSTALL AUTOMATIC AIR VENTS IN SUPPLY AND RETURN COIL BRANCH PIPING AS FOLLOWS:
   A) IN PIPING HIGH POINT WHEN PIPING IS ABOVE MAIN.
   B) CLOSE TO COIL WHEN PIPING IS NOT ABOVE MAIN (SIDE CONNECTION).
6. INSTALL COIL SO AIR PASSES THROUGH FINS IN PROPER DIRECTION NOTED ON COIL.
7. BALL VALVE IS TYPICAL, HOWEVER, VALVE TYPE IS DETERMINED ON P&ID.

NO	DATE	CLASS REV	ADC	DESCRIPTION	DWN	DES	CHKD	SUB	APP

AECOM

RLWTF-UP LOW LEVEL WASTE SUBPROJECT

MECHANICAL COIL PIPING DETAILS

BLDG. 230 TA-50

DRAWN	V DAWSON
DESIGN	B SHREEVE
CHECKED	C MOYERS
DATE	5/8/14

SUBMITTED MANNY TARIN

APPROVED FOR RELEASE ED ARTIGLIA

Los Alamos NATIONAL LABORATORY PO Box 1663 Los Alamos, New Mexico 87545

SHEET M-5002

281 OF 434

CLASSIFICATION REVIEWER DATE

PROJECT ID 100761

DRAWING NO C55864

REV 0

CHARLES MOYERS NEW MEXICO 16838 REGISTERED PROFESSIONAL ENGINEER 05-08-14

12332

File Location: P:\RLWTF LOW-LEVEL WASTE FACILITY\DGN CAD\C55864 MAIN BUILDING\SHEETS\15 MECHANICAL\55864-M-5002-RB.DWG
Plotted By: DAWSON, MACKEN Plot Date: Wednesday, May 07, 2014

EXTERIOR WALL

1. THROUGH PENETRANTS -- ONE OR MORE PIPE OR TUBING TO BE INSTALLED CONCENTRICALLY OR ECCENTRICALLY WITHIN THE OPENING. THE SPACE BETWEEN ANY PENETRANT AND THE PERIPHERY OF THE OPENING SHALL BE MIN 0 IN. (POINT CONTACT) TO MAX 1-1/4 IN. PIPES OR TUBING TO BE RIGIDLY SUPPORTED ON BOTH SIDES OF WALL ASSEMBLY. THE FOLLOWING TYPES AND SIZES OF METALLIC PIPES OR TUBING MAY BE USED:
   A. COPPER TUBE -- NOM 1 IN. DIAM (OR SMALLER) TYPE L (OR HEAVIER) COPPER TUBE.
   B. COPPER PIPE -- NOM 1 IN. DIAM (OR SMALLER) REGULAR (OR HEAVIER) COPPER PIPE.
2. TUBE INSULATION
3. CABLES -- MAX OF ONE 4 PAIR NO. 18 AWG (OR SMALLER) CABLE WITH PVC INSULATION AND JACKET MATERIALS.
4. PROVIDE BACKER ROD AND SEALANT BOTH SIDES OF WALL.
5. ESCUTCHEON TO BE PROVIDED IN FINISHED AREAS.
6. PIPE SLEEVE PER SPECIFICATIONS.

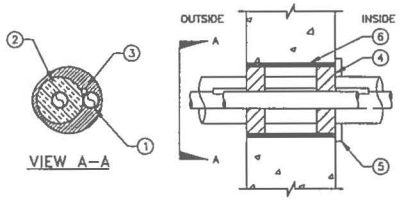

VIEW A-A

SECTION VIEW

1 M-1106 1 M-1107 PIPE PENETRATION DETAIL
SCALE: NONE

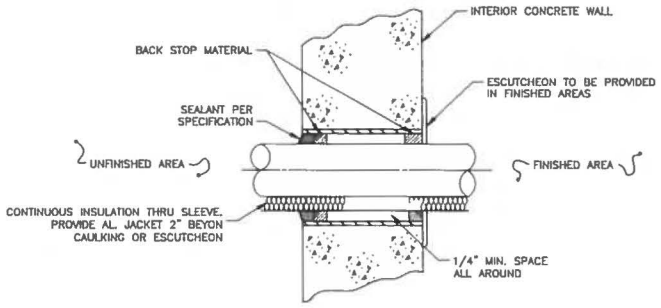

SECTION VIEW

2 M-1105 2 M-1106 2 M-1107 PIPE PENETRATION DETAIL
SCALE: NONE

NO	DATE	CLASS REV	ADC	DESCRIPTION	DWN	DES	CHKD	SUB	APP

AECOM

RLWTF-UP LOW LEVEL WASTE SUBPROJECT

MECHANICAL DETAILS

BLDG. 230 TA-50

DRAWN	V DAVISON
DESIGN	B SHREEVE
CHECKED	C MOYERS
DATE	5/6/14

SUBMITTED: MANNY TARIN

APPROVED FOR RELEASE: ED ARTIGLIA

Los Alamos NATIONAL LABORATORY PO Box 1663 Los Alamos, New Mexico 87545

SHEET M-5003

282 OF 434

CLASSIFICATION | REVIEWER | DATE

PROJECT ID 100761 | DRAWING NO C55864 | REV 0

CHARLES MOYERS NEW MEXICO 16838 LICENSED PROFESSIONAL ENGINEER
05-08-14

File Location: P:\RLWTF LOW-LEVEL WASTE FACILITY\500 CAD\C55864 MAIN BUILDING\SHEETS\15 MECHANICAL\55864-M-5003-R0.DWG
Plotted By: MOORE, STEPHEN Plot Date: Monday, May 05, 2014

12333

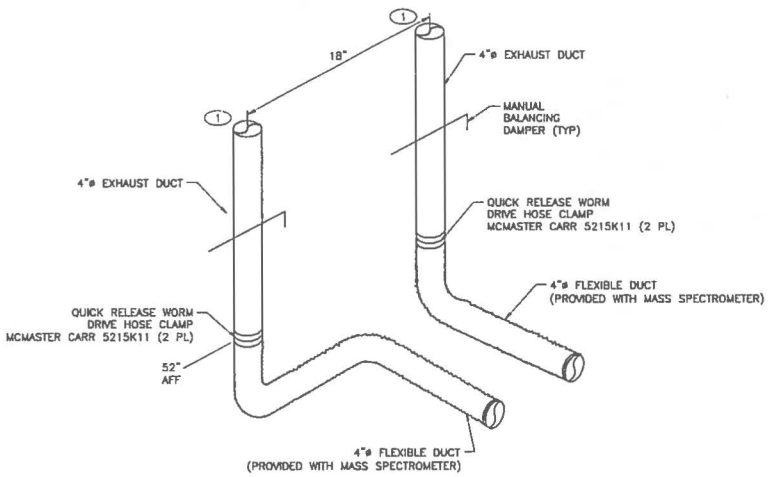

ISOMETRIC VIEWS

1 / M-1102 MASS SPECTROMETER CONNECTION DETAIL

SCALE: NONE

KEYED NOTES

(1) DUCT CONNECTS TO EXHAUST DUCT AT LOCATION SHOWN ON SHEET M-1102.

NO	DATE	CLASS REV	ADC	DESCRIPTION	DWN	DES	CHKD	SUB	APP

AECOM

RLWTF-UP LOW LEVEL WASTE SUBPROJECT

MECHANICAL DETAILS

DRAWN	V DAVISON
DESIGN	B SHREEVE
CHECKED	C MOYERS
DATE	5/8/14

BLDG. 230 TA-50

SUBMITTED MANNY TARIN

APPROVED FOR RELEASE ED ARTIGLIA

Los Alamos NATIONAL LABORATORY PO Box 1663 Los Alamos, New Mexico 87545

SHEET M-5004

283 OF 434

CLASSIFICATION REVIEWER DATE

PROJECT ID 100761 DRAWING NO C55864 REV 0

CHARLES MOYERS 18030 NEW MEXICO LICENSED PROFESSIONAL ENGINEER 05-01-14

File Location: P:\RLWTF LOW-LEVEL WASTE FACILITY\300 CAD\C55864 MAIN BUILDING\SHEETS\15 MECHANICAL\55864-M-5004-R00.DWG
Plotted By: MOORE, STEPHEN Plot Date: Monday, May 05, 2014

n6221;

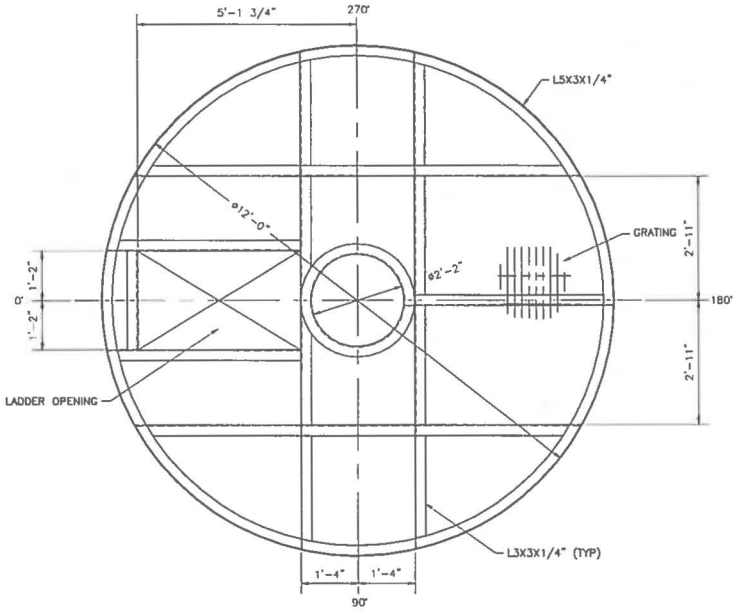

PLAN VIEW

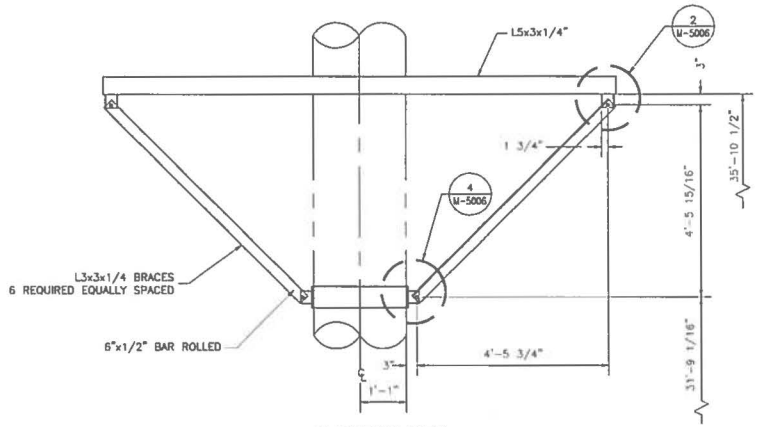

ELEVATION VIEW

1 M-2101 PLATFORM DETAIL

3/4"=1'-0"

GENERAL NOTES

1. IF THIS SHEET IS NOT 24"x 36", THEN IT IS A REDUCED SIZE PLOT. USE GRAPHIC SCALE ACCORDINGLY.
2. SEE SPECIFICATION SECTION 23 5100, VENTS AND STACKS FOR MATERIALS, DESIGN, FABRICATION AND INSTALLATION.

NO	DATE	CLASS REV	ADC	DESCRIPTION	DWN	DES	CHKD	SUB	APP

AECOM

RLWTF-UP LOW LEVEL WASTE SUBPROJECT

STACK DETAIL

BLDG. 230 TA-50

DRAWN	V DAVISON
DESIGN	B SHREEVE
CHECKED	C MOYERS
DATE	5/8/14

SUBMITTED: MANNY TARIN

APPROVED FOR RELEASE: ED ARTIGLIA

Los Alamos NATIONAL LABORATORY PO Box 1663 Los Alamos, New Mexico 87545

SHEET M-5005

284 OF 434

CLASSIFICATION | REVIEWER | DATE

PROJECT ID 100761 | DRAWING NO C55864 | REV 0

05-08-14

File Location: P:\RLWTF LOW-LEVEL WASTE FACILITY\500 CAD\C55864 MAIN BUILDING\SHEETS\15 MECHANICAL\55864-M-5005-R0.DWG
Plotted By: MOORE, STEPHEN Plot Date: Monday, May 05, 2014

12335

GENERAL NOTES

1. IF THIS SHEET IS NOT 24"x 36", THEN IT IS A REDUCED SIZE PLOT. USE GRAPHIC SCALE ACCORDINGLY
2. SEE SPECIFICATION SECTION 23 5100, VENTS AND STACKS FOR MATERIALS, DESIGN, FABRICATION AND INSTALLATION.

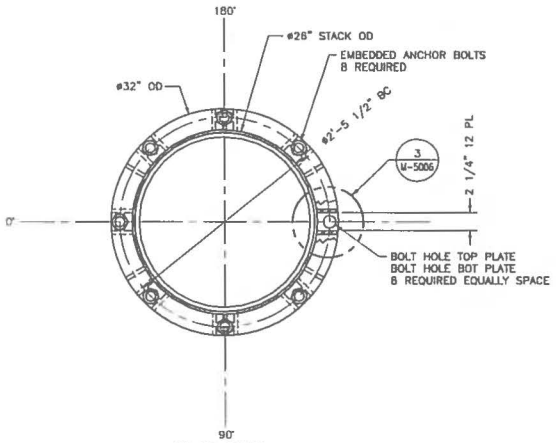

PLAN VIEW

1 M-2101 STACK FOUNDATION DETAIL

1 1/2"=1'-0"

NOTE:
1. SEE SHEET C-5007 FOR EXHAUST STACK FOUNDATION.

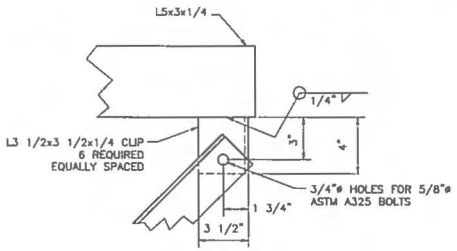

ELEVATION VIEW

2 M-5005 PLATFORM BRACE DETAIL

3"=1'-0"

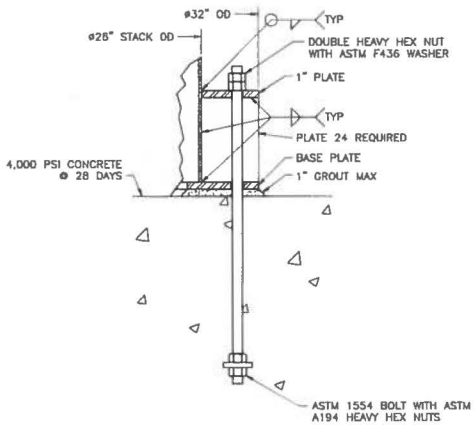

SECTION VIEW

3 M-5006 ANCHOR BOLT DETAIL

1 1/2"=1'-0"

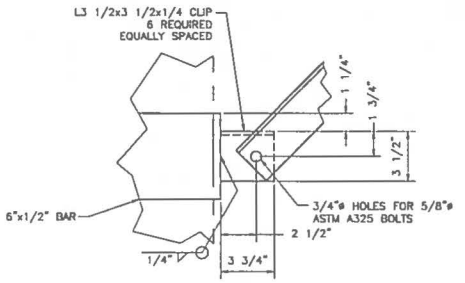

ELEVATION VIEW

4 M-5005 PLATFORM BRACE DETAIL

3"=1'-0"

NO	DATE	CLASS REV	ADC	DESCRIPTION	DWN	DES	CHKD	SUB	APP

AECOM

RLWTF-UP LOW LEVEL WASTE SUBPROJECT

STACK DETAIL

DRAWN	V DAVISON	VJD
DESIGN	B SHREEVE	BJS
CHECKED	C MOYERS	CWM
DATE	5/6/14	

BLDG. 230 TA-50

SUBMITTED MANNY TARIN

APPROVED FOR RELEASE ED ARTIGLIA

Los Alamos NATIONAL LABORATORY PO Box 1663 Los Alamos, New Mexico 87545

SHEET M-5006

285 OF 434

CLASSIFICATION | REVIEWER | DATE

PROJECT ID 100761 | DRAWING NO C55864 | REV 0

CHARLES MOYERS NEW MEXICO 18638 REGISTERED PROFESSIONAL ENGINEER 05-01-14

File Location: P:\RLWTF LOW-LEVEL WASTE FACILITY\300 CAD\C55864 MAIN BUILDING\SHEETS\13 MECHANICAL\55864-M-5006-R0.DWG
Plotted By: MOORE, STEPHEN Plot Date: Monday, May 05, 2014

1239

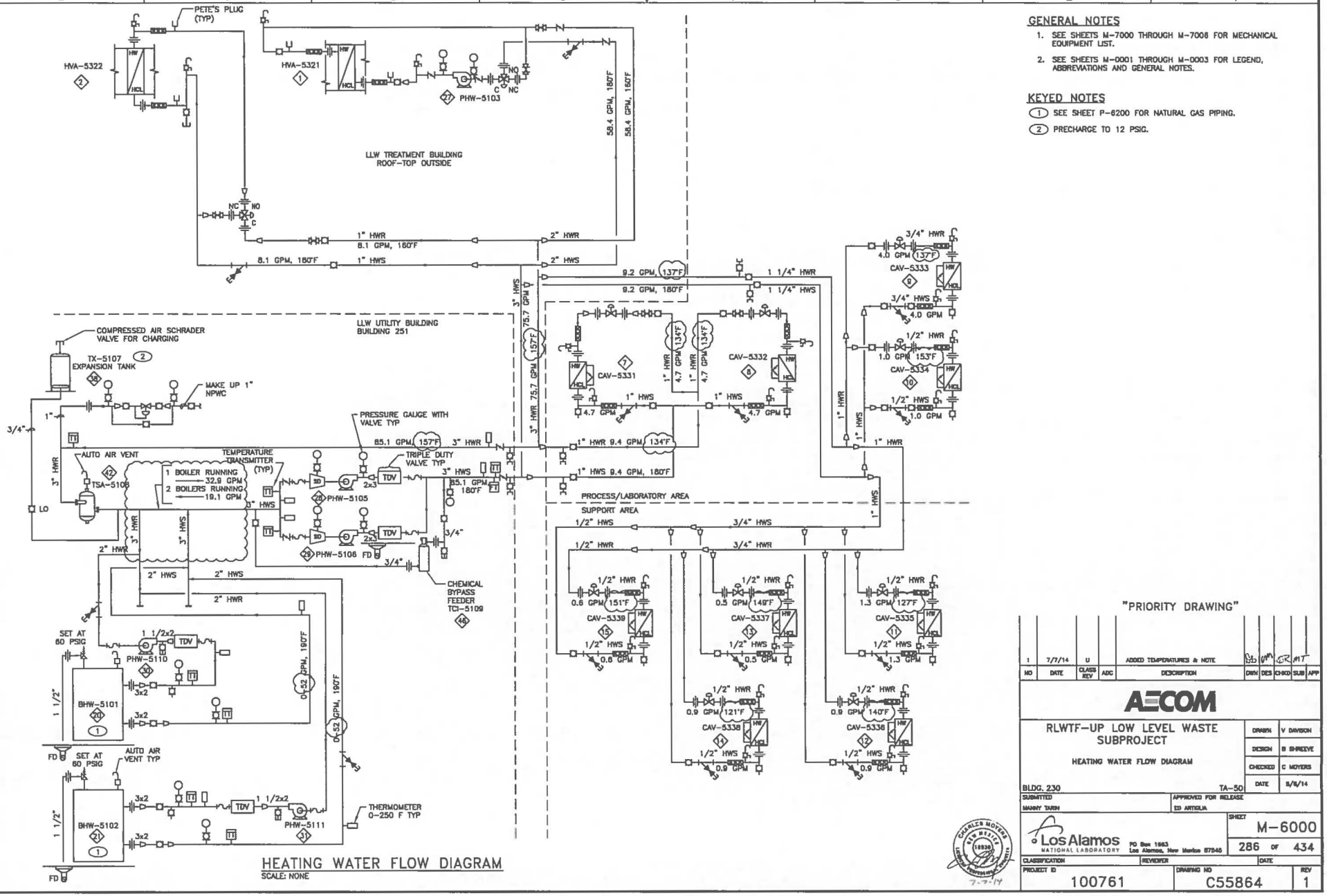

HEATING WATER FLOW DIAGRAM

SCALE: NONE

GENERAL NOTES

1. SEE SHEETS M-7000 THROUGH M-7008 FOR MECHANICAL EQUIPMENT LIST.
2. SEE SHEETS M-0001 THROUGH M-0003 FOR LEGEND, ABBREVIATIONS AND GENERAL NOTES.

KEYED NOTES

(1) SEE SHEET P-6200 FOR NATURAL GAS PIPING.
(2) PRECHARGE TO 12 PSIG.

"PRIORITY DRAWING"

NO	DATE	CLASS REV	ADC	DESCRIPTION	DWN	DES	CHKD	SUB	APP
1	7/7/14	U		ADDED TEMPERATURES & NOTE	SD	VM	CR	MT	

AECOM

RLWTF-UP LOW LEVEL WASTE SUBPROJECT

HEATING WATER FLOW DIAGRAM

DRAWN	V DAVISON
DESIGN	B SHREEVE
CHECKED	C MOYERS
DATE	5/8/14

BLDG. 230 TA-50

SUBMITTED: MANNY TARIN

APPROVED FOR RELEASE: ED ARTIGLIA

Los Alamos NATIONAL LABORATORY PO Box 1663 Los Alamos, New Mexico 87545

SHEET M-6000

286 OF 434

CLASSIFICATION | REVIEWER | DATE

PROJECT ID 100761 | DRAWING NO C55864 | REV 1

CHARLES MOYERS NEW MEXICO 10938 REGISTERED PROFESSIONAL ENGINEER 7-7-14

File Location: M:\RLWTF LOW-LEVEL WASTE FACILITY\500 CAD\CASARA MAIN BUILDING\SHEETS\15 MECHANICAL\55864-M-6000-R01.DWG
Plotted By: BRODMAN, BARLOG Plot Date: Monday, July 07, 2014

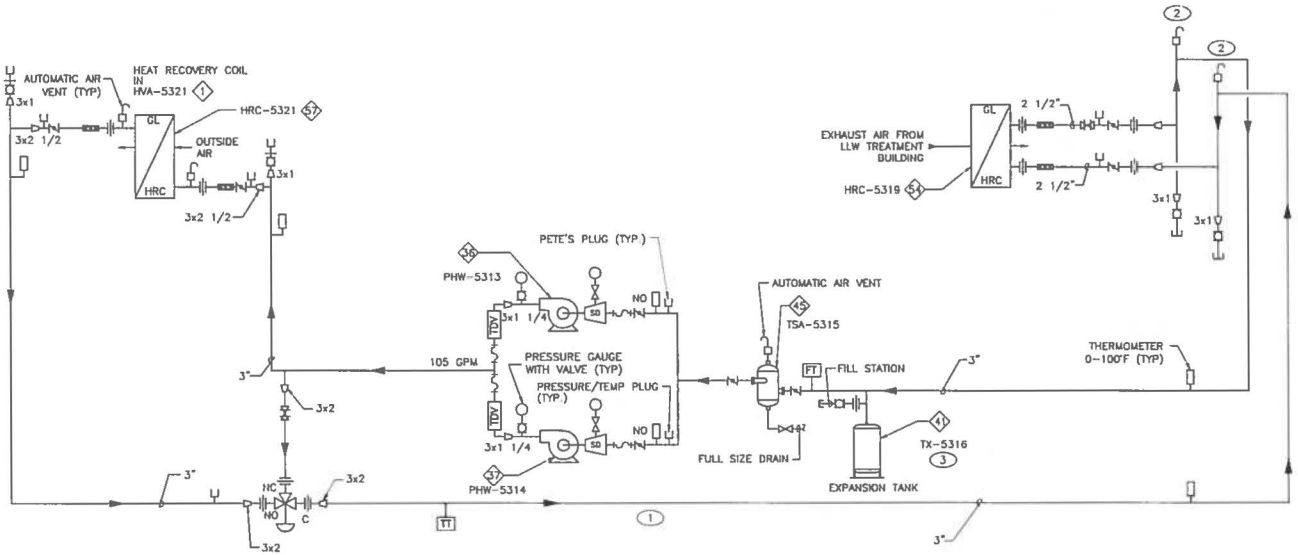

ENERGY RECOVERY LOOP FLOW DIAGRAM
SCALE: NONE

GENERAL NOTES

1. SEE SHEETS M-7000 THROUGH M-7006 FOR MECHANICAL EQUIPMENT LIST.
2. SEE SHEETS M-0001 THROUGH M-0003 FOR LEGEND, ABBREVIATIONS AND GENERAL NOTES.

KEYED NOTES

(1) 43% PROPYLENE GLYCOL/WATER MIXTURE WHICH HAS A FREEZE TEMPERATURE BELOW -10°F.

(2) PROVIDE AUTOMATIC AIR VENTS AT ALL HIGH PIPING POINTS AND COIL LOCATIONS.

(3) PRECHARGE TO 12 PSIG.

"PRIORITY DRAWING"

NO	DATE	CLASS REV	ADC	DESCRIPTION	DWN	DES	CHKD	SUB	APP

AECOM

RLWTF-UP LOW LEVEL WASTE SUBPROJECT

ENERGY RECOVERY LOOP FLOW DIAGRAM

BLDG. 230 TA-50

DRAWN	V DAVISON
DESIGN	B SHREEVE
CHECKED	C MOYERS
DATE	5/8/14

SUBMITTED MANNY TARIN

APPROVED FOR RELEASE ED ARTIGLIA

Los Alamos NATIONAL LABORATORY PO Box 1663 Los Alamos, New Mexico 87545

SHEET M-6001

287 OF 434

CLASSIFICATION | REVIEWER | DATE

PROJECT ID 100761 | DRAWING NO C55864 | REV 0

CHARLES MOYERS 18538 NEW MEXICO REGISTERED PROFESSIONAL ENGINEER 05-01-14

File Location: P:\RLWTF LOW-LEVEL WASTE FACILITY\500 CAD\C55864 MAIN BUILDING\SHEETS\15 MECHANICAL\55864-M-6001-RD.DWG
Plotted By: DAVISON, WARREN Plot Date: Wednesday, May 07, 2014

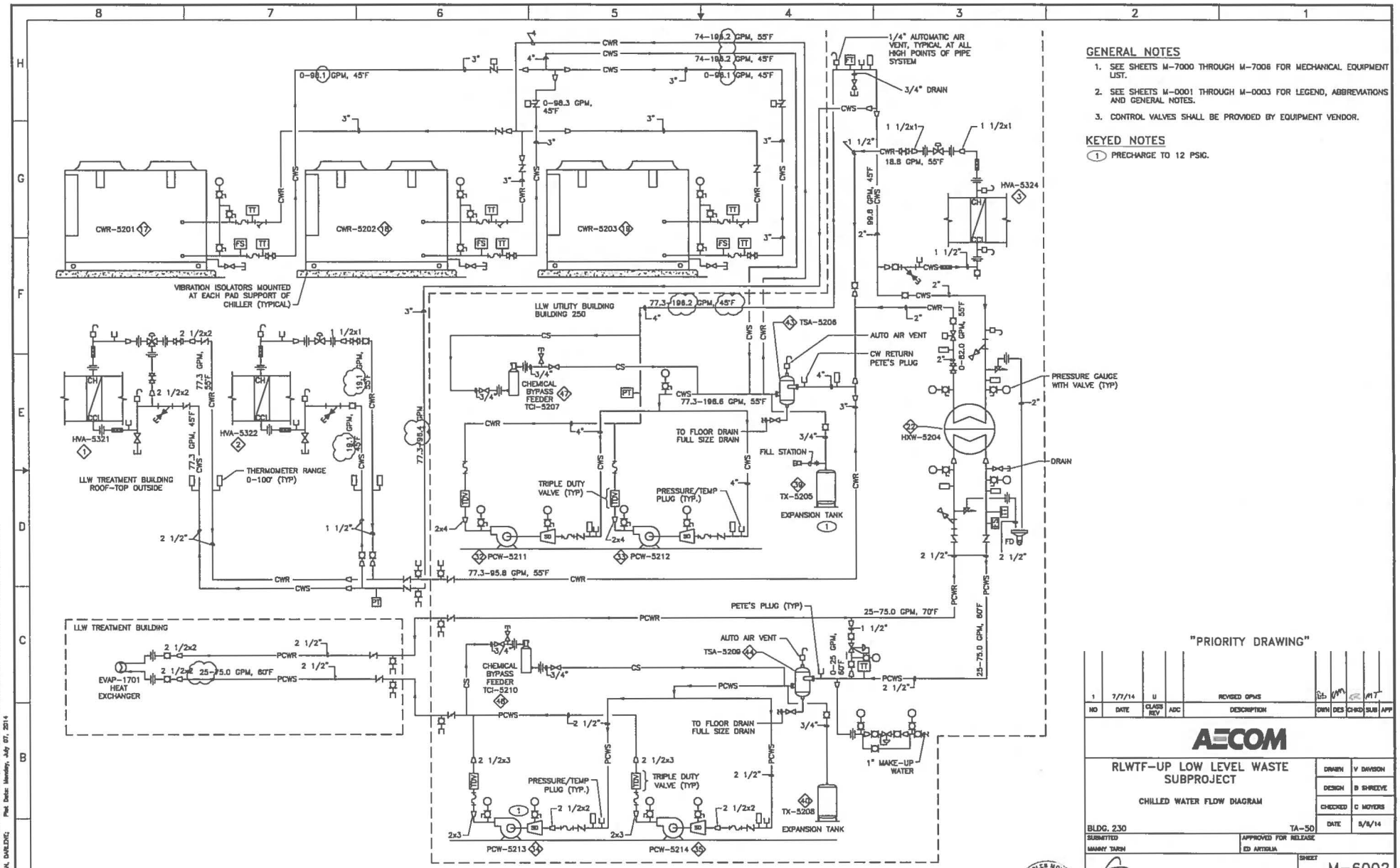

CHILLED WATER FLOW DIAGRAM

SCALE: NONE

GENERAL NOTES

1. SEE SHEETS M-7000 THROUGH M-7006 FOR MECHANICAL EQUIPMENT LIST.
2. SEE SHEETS M-0001 THROUGH M-0003 FOR LEGEND, ABBREVIATIONS AND GENERAL NOTES.
3. CONTROL VALVES SHALL BE PROVIDED BY EQUIPMENT VENDOR.

KEYED NOTES

(1) PRECHARGE TO 12 PSIG.

"PRIORITY DRAWING"

NO	DATE	CLASS REV	ADC	DESCRIPTION	DWN	DES	CHKD	SUB	APP
1	7/7/14	U		REVISED GPMS					

AECOM

RLWTF-UP LOW LEVEL WASTE SUBPROJECT

CHILLED WATER FLOW DIAGRAM

DRAWN	V DAVISON
DESIGN	B SHREEVE
CHECKED	C MOYERS
DATE	8/8/14

BLDG. 230 TA-50

SUBMITTED: MANNY TARIN

APPROVED FOR RELEASE: ED ARTIGLIA

Los Alamos NATIONAL LABORATORY PO Box 1663 Los Alamos, New Mexico 87545

SHEET M-6002

288 OF 434

CLASSIFICATION | REVISION | DATE

PROJECT ID 100761 | DRAWING NO C55864 | REV 1

CHARLES MOYERS NEW MEXICO 15936 REGISTERED PROFESSIONAL ENGINEER 7-7-14

File Location: W:\RLWTF LOW-LEVEL WASTE FACILITY\000 CAD\C55864 MAIN BUILDING\SHEETS\13 MECHANICAL\55864-M-6002-R1.DWG
Plotted By: BROADMAN, DARLENE; Plot Date: Monday, July 07, 2014

63321

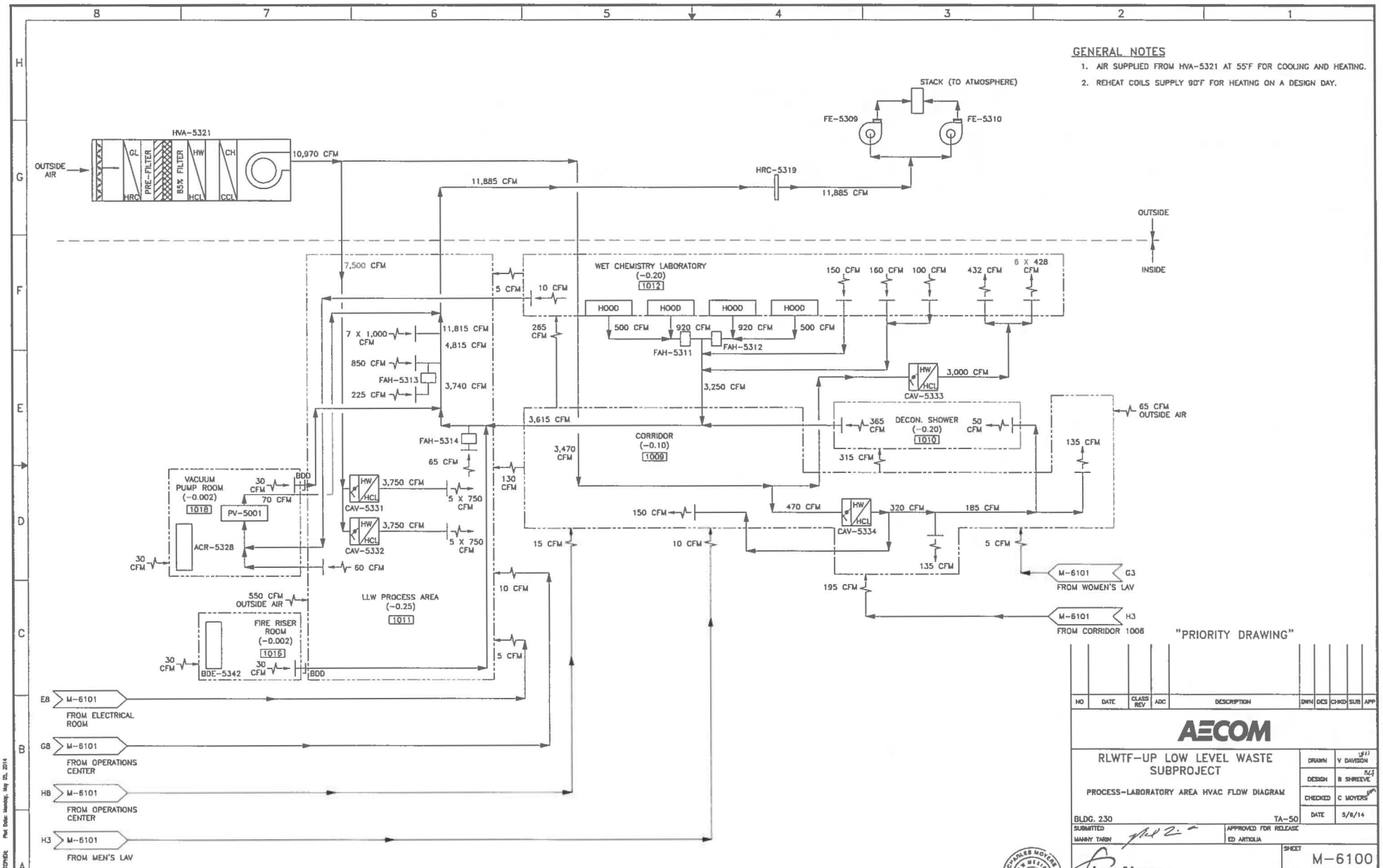

PROCESS–LABORATORY AREA HVAC FLOW DIAGRAM
SCALE: NONE

NO	DATE	CLASS REV	ADC	DESCRIPTION	DWN	DES	CHKD	SUB	APP

AECOM

RLWTF–UP LOW LEVEL WASTE SUBPROJECT

PROCESS–LABORATORY AREA HVAC FLOW DIAGRAM

BLDG. 230 TA–50

DRAWN	V DAVISON
DESIGN	B SHREEVE
CHECKED	C MOYERS
DATE	5/8/14

SUBMITTED MANNY TARIN

APPROVED FOR RELEASE ED ARTIGLIA

Los Alamos NATIONAL LABORATORY PO Box 1663 Los Alamos, New Mexico 87545

SHEET	M–6100
	289 OF 434
CLASSIFICATION	
REVIEWER	
DATE	
PROJECT ID	100761
DRAWING NO	C55864
REV	0

CHARLES MOYERS NEW MEXICO 15830 LICENSED PROFESSIONAL ENGINEER 05-01-14

File Location: P:\RLWTF LOW-LEVEL WASTE FACILITY\300 CAD\C55864 MAIN BUILDING\SHEETS\13 MECHANICAL\55864-M-6100-R0.DWG
Plotted By: MOORE, STEPHEN Plot Date: Monday, May 05, 2014

0121310

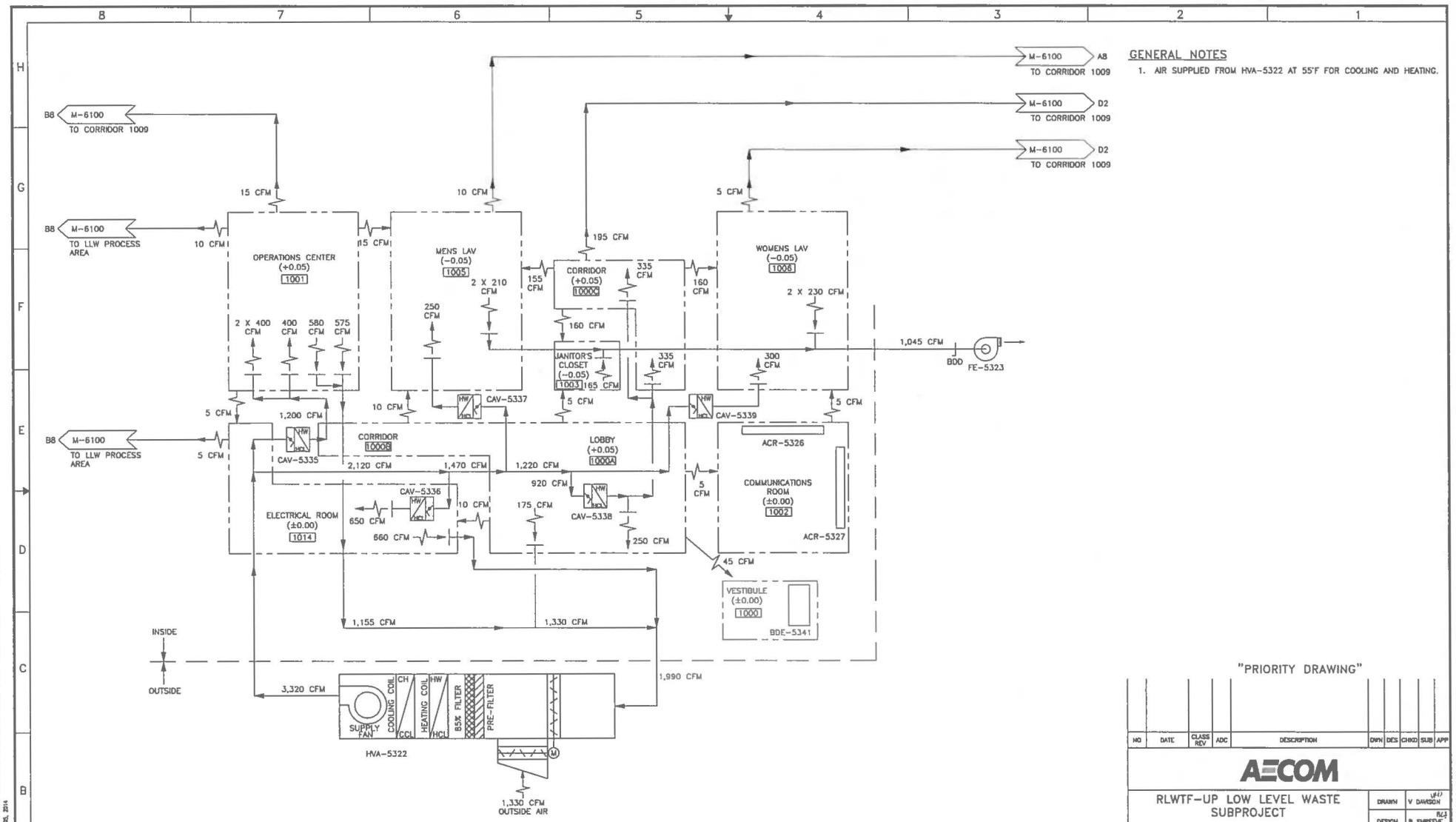

SUPPORT AREA HVAC FLOW DIAGRAM

SCALE: NONE

GENERAL NOTES

1. AIR SUPPLIED FROM HVA-5322 AT 55°F FOR COOLING AND HEATING.

"PRIORITY DRAWING"

NO	DATE	CLASS REV	ADC	DESCRIPTION	DWN	DES	CHKD	SUB	APP

AECOM

RLWTF-UP LOW LEVEL WASTE SUBPROJECT

SUPPORT AREA HVAC FLOW DIAGRAM

DRAWN	V DAVISON	VJD
DESIGN	B SHREEVE	BJS
CHECKED	C MOYERS	CMM
DATE	5/8/14	

BLDG. 230 TA-50

SUBMITTED: MANNY TAREN — APPROVED FOR RELEASE: ED ARTIGLIA

Los Alamos NATIONAL LABORATORY — PO Box 1663, Los Alamos, New Mexico 87545

SHEET M-6101

290 OF 434

CLASSIFICATION | REVIEWER | DATE

PROJECT ID: 100761 | DRAWING NO: C55864 | REV: 0

CHARLES MOYERS — NEW MEXICO — 10839 — REGISTERED PROFESSIONAL ENGINEER — 05-07-14

File Location: P:\RLWTF LOW-LEVEL WASTE FACILITY\300 CAD\C55864 MAIN BUILDING\SHEETS\19 MECHANICAL\55864-M-6101-R0.DWG
Plotted By: MOORE, STEPHEN Plot Date: Monday, May 05, 2014

Filed

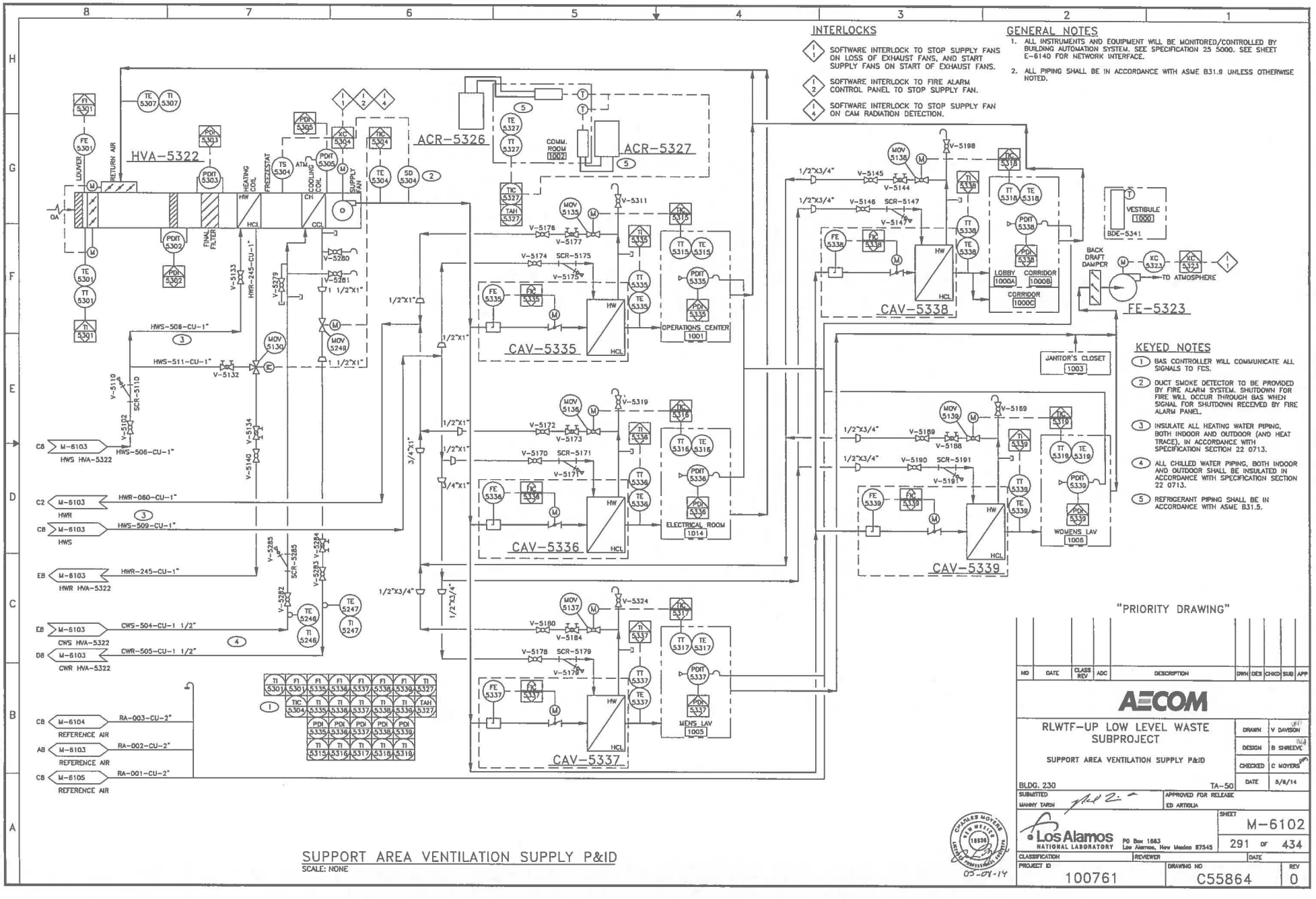

"PRIORITY DRAWING"

NO	DATE	CLASS REV	ADC	DESCRIPTION	DWN	DES	CHKD	SUB	APP

AECOM

RLWTF-UP LOW LEVEL WASTE SUBPROJECT

SUPPORT AREA VENTILATION SUPPLY P&ID

BLDG. 230 TA-50

DRAWN	V DAVISION
DESIGN	B SHREEVE
CHECKED	C MOYERS
DATE	9/8/14

SUBMITTED MANNY TARIN

APPROVED FOR RELEASE ED ARTIOLA

Los Alamos NATIONAL LABORATORY P.O. Box 1663 Los Alamos, New Mexico 87545

SHEET M-6102

291 OF 434

CLASSIFICATION | REVIEWER | DATE

PROJECT ID 100761 | DRAWING NO C55864 | REV 0

CHARLES MOYERS NEW MEXICO 18836 REGISTERED PROFESSIONAL ENGINEER 09-09-14

SUPPORT AREA VENTILATION SUPPLY P&ID
SCALE: NONE

File Location: P:\RLWTF LOW-LEVEL WASTE FACILITY\500 CAD\C55864 MAIN BUILDING\SHEETS\15 MECHANICAL\55864-M-6102-R0.DWG
Plotted By: MOORE, STEPHEN Plot Date: Monday, May 05, 2014

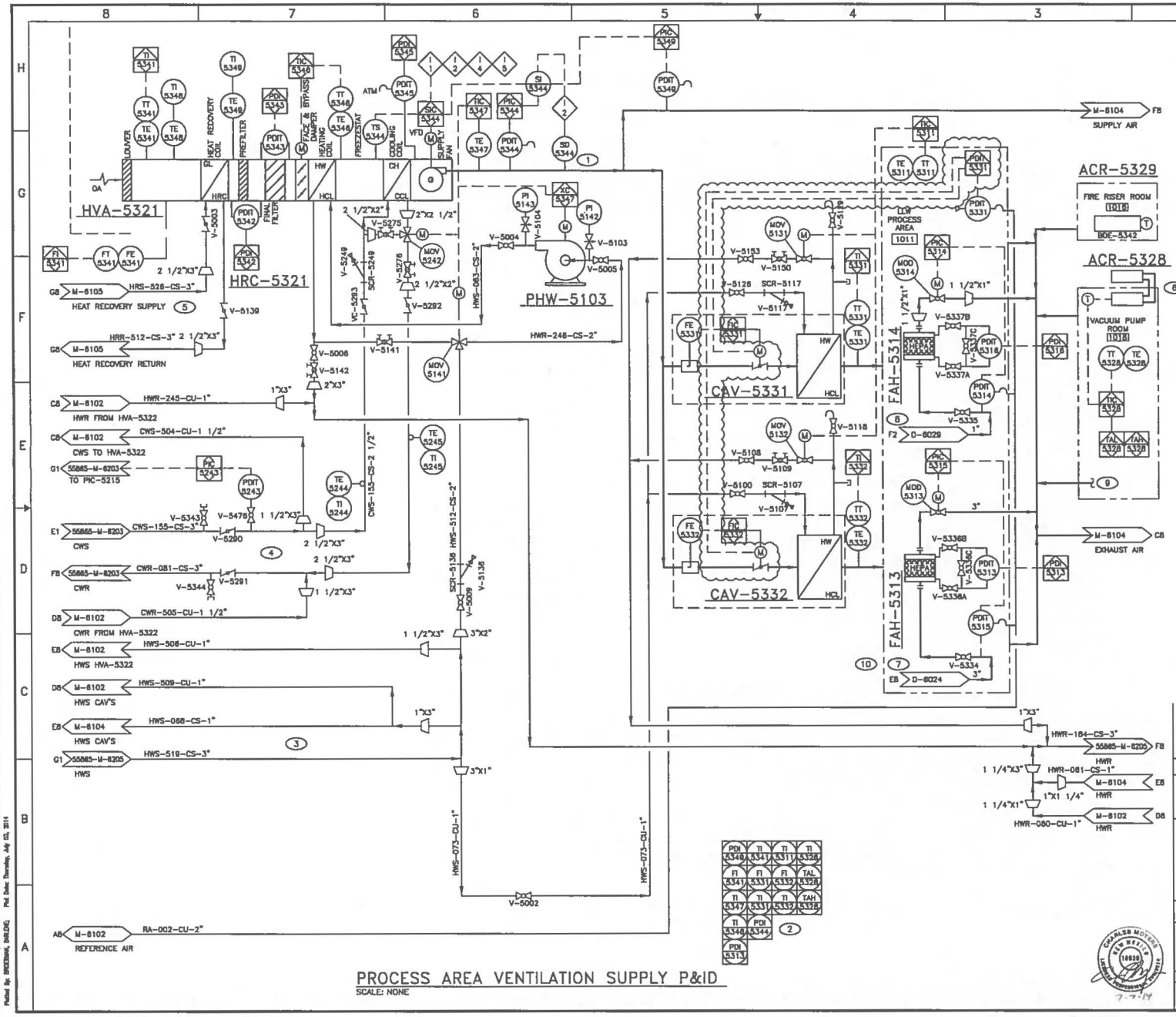

PROCESS AREA VENTILATION SUPPLY P&ID

SCALE: NONE

GENERAL NOTES

1. ALL INSTRUMENTS AND EQUIPMENT WILL BE MONITORED/CONTROLLED BY BUILDING AUTOMATION SYSTEM. SEE SPECIFICATION 25 5000. SEE SHEET E-6140 FOR NETWORK INTERFACE.
2. ALL PIPING SHALL BE IN ACCORDANCE WITH ASME B31.9 UNLESS OTHERWISE NOTED.

INTERLOCKS

- 1 SOFTWARE INTERLOCK TO STOP SUPPLY FANS ON LOSS OF EXHAUST FANS, AND START SUPPLY FANS ON START OF EXHAUST FANS.
- 2 SOFTWARE INTERLOCK TO FIRE ALARM CONTROL PANEL, STOP SUPPLY FAN.
- 4 SOFTWARE INTERLOCK TO STOP SUPPLY FAN ON CAM RADIATION DETECTION.
- 5 HARD WIRED INTERLOCK TO PREVENT SUPPLY VFD OPERATION WHEN MOTOR DISCONNECT IS NOT CLOSED.

KEYED NOTES

1. SMOKE DETECTOR TO BE WIRED TO FIRE ALARM CONTROL PANEL.
2. BAS CONTROLLER WILL COMMUNICATE ALL SIGNALS TO FCS.
3. INSULATE ALL HEATING WATER PIPING, BOTH INDOOR AND OUTDOOR (AND HEAT TRACE) IN ACCORDANCE WITH SPECIFICATION SECTION 22 0713.
4. ALL CHILLED WATER PIPING, BOTH INDOOR AND OUTDOOR IN ACCORDANCE WITH SPECIFICATION SECTION 22 0713.
5. ALL HEAT RECOVERY PIPING SHALL BE INSULATED IN ACCORDANCE WITH SPECIFICATION SECTION 22 0713.
6. REFRIGERANT PIPING SHALL BE IN ACCORDANCE WITH ASME B31.5.
7. EXHAUST FROM ENC-1703
8. EXHAUST FROM EVAP-1701.
9. EXHAUST FROM PV-5001.
10. INCLUDE A PRESSURE SWITCH ON THE DOOR TO HOLD THE MOD POSITION WHEN ENCLOSURE DOOR IS OPENED.

"PRIORITY DRAWING"

NO	DATE	CLASS REV	ADC	DESCRIPTION	DWN	DES	CHKD	SUB	APP
1	7/7/14	U		REVISED SIGNALS					

AECOM

RLWTF-UP LOW LEVEL WASTE SUBPROJECT

PROCESS AREA VENTILATION SUPPLY P&ID

BLDG. 230 TA-50

DRAWN	V DAVISON
DESIGN	B SHREEVE
CHECKED	C MOYERS
DATE	5/8/14

SUBMITTED: MANNY TARIN

APPROVED FOR RELEASE: ED ARTIGLIA

Los Alamos NATIONAL LABORATORY PO Box 1663 Los Alamos, New Mexico 87545

SHEET M-6103

292 OF 434

CLASSIFICATION | REVIEWER | DATE

PROJECT ID 100761 | DRAWING NO C55864 | REV 1

File Location: W:\RLWTF LOW-LEVEL WASTE FACILITY\500 CAD\C55864 MAIN BUILDING\SHEETS\15 MECHANICAL\55864-M-6103 -R0.DWG
Plotted By: BROEDAN, DARLING Plot Date: Thursday, July 03, 2014

123143

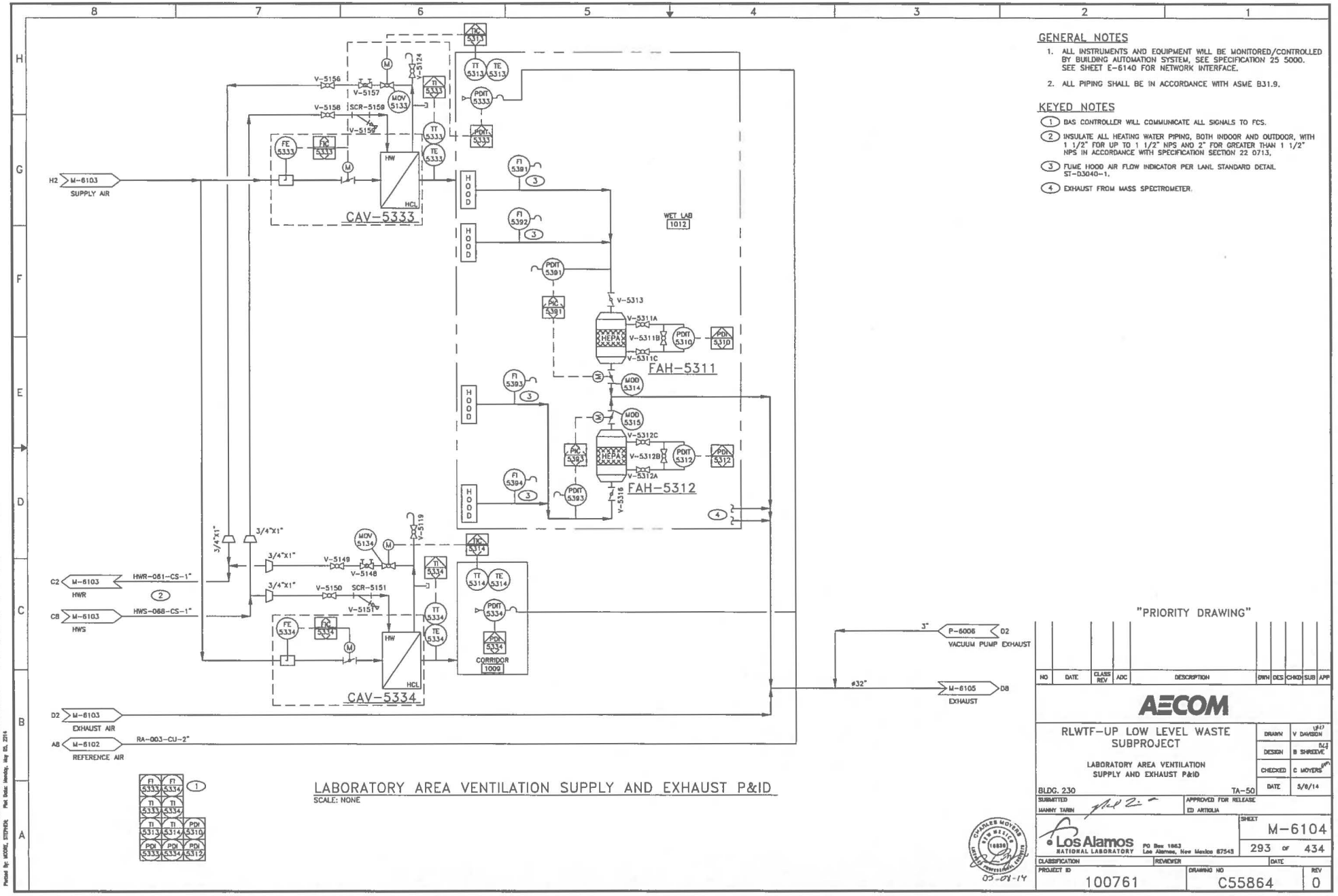

GENERAL NOTES

1. ALL INSTRUMENTS AND EQUIPMENT WILL BE MONITORED/CONTROLLED BY BUILDING AUTOMATION SYSTEM, SEE SPECIFICATION 25 5000. SEE SHEET E-6140 FOR NETWORK INTERFACE.
2. ALL PIPING SHALL BE IN ACCORDANCE WITH ASME B31.9.

KEYED NOTES

(1) BAS CONTROLLER WILL COMMUNICATE ALL SIGNALS TO FCS.

(2) INSULATE ALL HEATING WATER PIPING, BOTH INDOOR AND OUTDOOR, WITH 1 1/2" FOR UP TO 1 1/2" NPS AND 2" FOR GREATER THAN 1 1/2" NPS IN ACCORDANCE WITH SPECIFICATION SECTION 22 0713.

(3) FUME HOOD AIR FLOW INDICATOR PER LANL STANDARD DETAIL ST-D3040-1.

(4) EXHAUST FROM MASS SPECTROMETER.

"PRIORITY DRAWING"

NO	DATE	CLASS REV	ADC	DESCRIPTION	DWN	DES	CHKD	SUB	APP

AECOM

RLWTF-UP LOW LEVEL WASTE SUBPROJECT

LABORATORY AREA VENTILATION SUPPLY AND EXHAUST P&ID

BLDG. 230 TA-50

DRAWN	V DAVISION	
DESIGN	B SHREEVE	
CHECKED	C MOYERS	
DATE	5/8/14	

SUBMITTED MANNY TARIN

APPROVED FOR RELEASE ED ARTIOLIA

Los Alamos NATIONAL LABORATORY PO Box 1663 Los Alamos, New Mexico 87545

SHEET	M-6104
	293 OF 434
CLASSIFICATION	
REVIEWER	
DATE	
PROJECT ID	100761
DRAWING NO	C55864
REV	0

05-01-14

File Location: P:\RLWTF LOW-LEVEL WASTE FACILITY\300 CAD\C55864 MAIN BUILDING\SHEETS\13 MECHANICAL\55864-M-6104-R0.DWG
Plotted By: MOORE, STEPHEN Plot Date: Monday, May 05, 2014

KEYED NOTES

1. SEE SHEET M-6106 FOR STACK AIR SAMPLING P&ID.
2. DAMPER OPERATORS INCLUDE POSITION SWITCHES.
3. BAS CONTROLLER WILL COMMUNICATE ALL SIGNALS TO FCS.
4. INTERLOCKS I-1, I-4 AND I-5 ARE APPLICABLE TO FE-5309.
5. ALL HEAT RECOVERY PIPING SHALL BE INSULATED IN ACCORDANCE WITH SPECIFICATION SECTION 22 0713.
6. EXHAUST AIR TEMPERATURE TO DETERMINE HEAT RECOVERY OPERATION.

GENERAL NOTES

1. ALL INSTRUMENTS AND EQUIPMENT WILL BE MONITORED/CONTROLLED BY BUILDING AUTOMATION SYSTEM. SEE SPECIFICATION 25 5000. SEE SHEET E-6140 FOR NETWORK INTERFACE.
2. ALL PIPING SHALL BE IN ACCORDANCE WITH ASME B31.9.

INTERLOCKS

- I-1: SOFTWARE INTERLOCK STOP SUPPLY FANS, ON SHEET M-6102 AND M-6103, ON LOSS OF EXHAUST FANS, AND START SUPPLY FANS ON START OF EXHAUST FANS..
- I-3: SOFTWARE INTERLOCK MOTOR OPERATED DAMPERS TO BE OPEN UPON CALL TO START EXHAUST FAN. DAMPERS SHALL CLOSE WHEN FAN COMMANDED OFF.
- I-4: SOFTWARE INTERLOCK TO STOP FANS ON CAM RADIATION DETECTION.
- I-5: HARD WIRED INTERLOCK TO PREVENT VFD OPERATION WHEN MOTOR DISCONNECT IS NOT CLOSED.

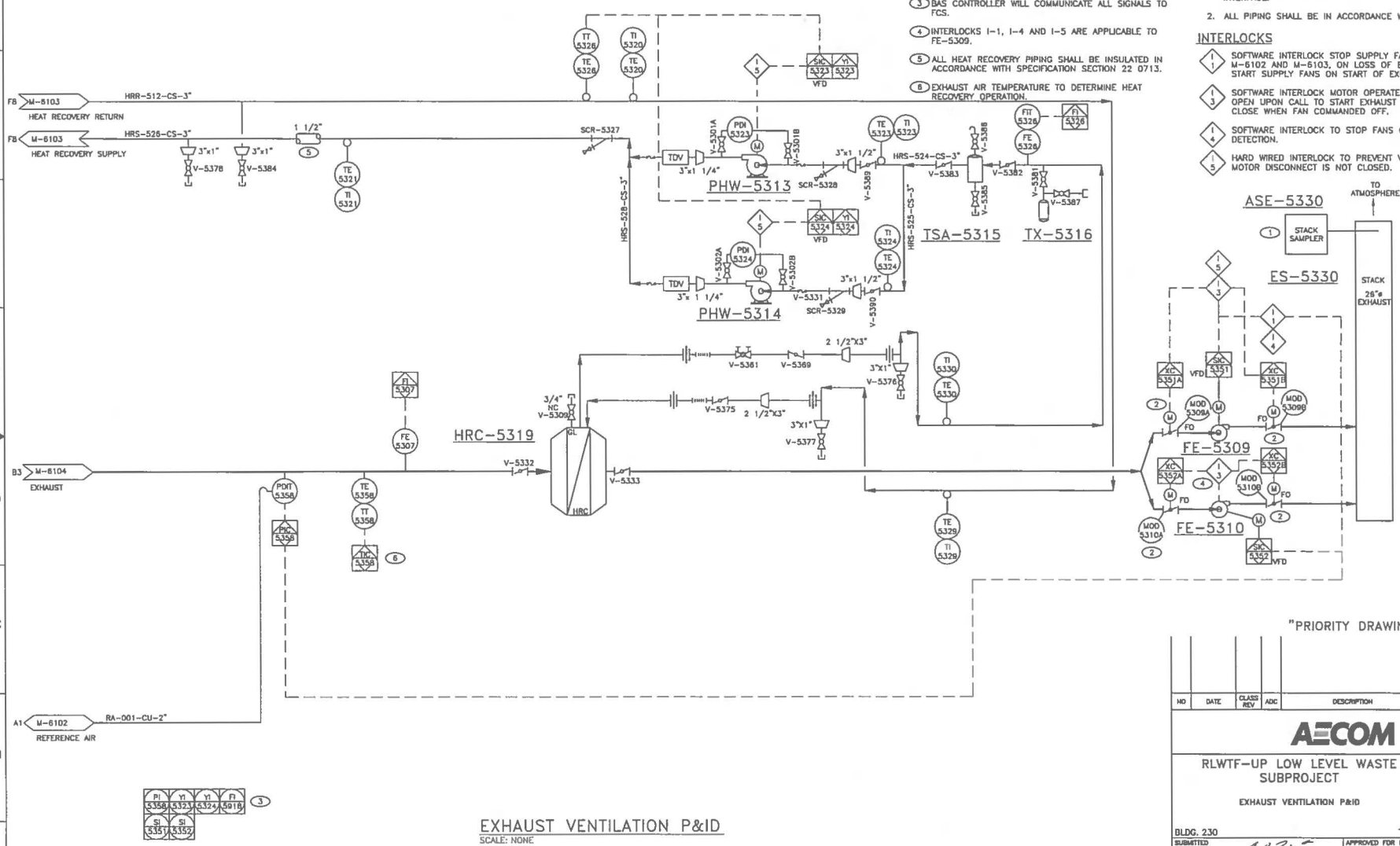

EXHAUST VENTILATION P&ID
SCALE: NONE

"PRIORITY DRAWING"

NO	DATE	CLASS REV	ADC	DESCRIPTION	DWN	DES	CHKD	SUB	APP

AECOM

RLWTF-UP LOW LEVEL WASTE SUBPROJECT

EXHAUST VENTILATION P&ID

BLDG. 230 TA-50

DRAWN	V DAVISON
DESIGN	B SHREEVE
CHECKED	C MOYERS
DATE	5/6/14

SUBMITTED: MANNY TARIN
APPROVED FOR RELEASE: ED ARTIGLIA

Los Alamos NATIONAL LABORATORY, PO Box 1663, Los Alamos, New Mexico 87545

SHEET M-6105
294 OF 434

CLASSIFICATION | REVIEWER | DATE

PROJECT ID 100761 | DRAWING NO C55864 | REV 0

CHARLES MOYERS, NEW MEXICO 18638, LICENSED PROFESSIONAL ENGINEER
05-08-14

File Location: P:\RLWTF LOW-LEVEL WASTE FACILITY\500 CAD\C55864 MAIN BUILDING\SHEETS\15 MECHANICAL\55864-M-6105-RD.DWG
Plotted By: MOORE, STEPHEN Plot Date: Monday, May 05, 2014

: 12345

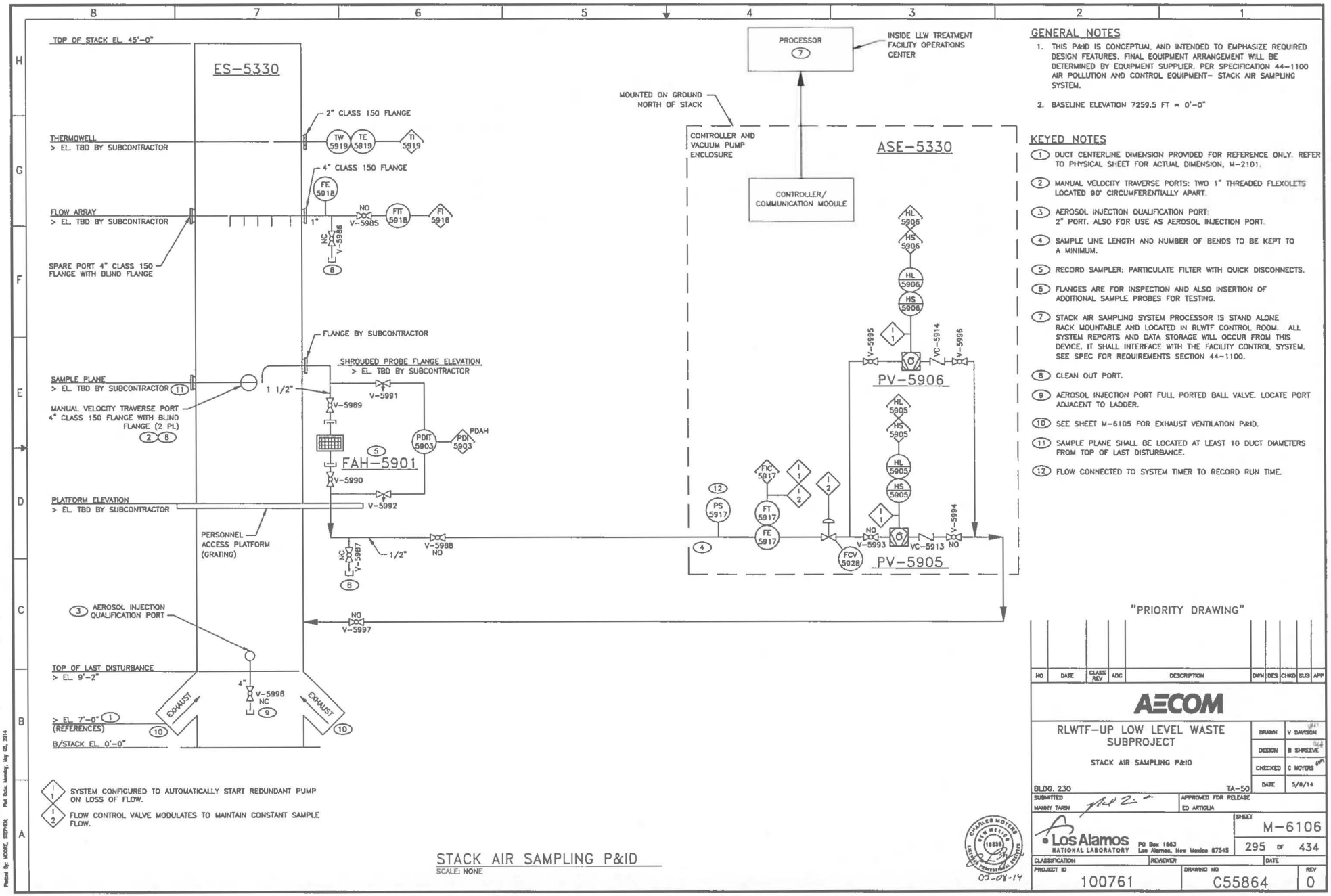

GENERAL NOTES

1. THIS P&ID IS CONCEPTUAL AND INTENDED TO EMPHASIZE REQUIRED DESIGN FEATURES. FINAL EQUIPMENT ARRANGEMENT WILL BE DETERMINED BY EQUIPMENT SUPPLIER. PER SPECIFICATION 44-1100 AIR POLLUTION AND CONTROL EQUIPMENT- STACK AIR SAMPLING SYSTEM.
2. BASELINE ELEVATION 7259.5 FT = 0'-0"

KEYED NOTES

(1) DUCT CENTERLINE DIMENSION PROVIDED FOR REFERENCE ONLY. REFER TO PHYSICAL SHEET FOR ACTUAL DIMENSION, M-2101.

(2) MANUAL VELOCITY TRAVERSE PORTS: TWO 1" THREADED FLEXOLETS LOCATED 90° CIRCUMFERENTIALLY APART.

(3) AEROSOL INJECTION QUALIFICATION PORT: 2" PORT. ALSO FOR USE AS AEROSOL INJECTION PORT.

(4) SAMPLE LINE LENGTH AND NUMBER OF BENDS TO BE KEPT TO A MINIMUM.

(5) RECORD SAMPLER: PARTICULATE FILTER WITH QUICK DISCONNECTS.

(6) FLANGES ARE FOR INSPECTION AND ALSO INSERTION OF ADDITIONAL SAMPLE PROBES FOR TESTING.

(7) STACK AIR SAMPLING SYSTEM PROCESSOR IS STAND ALONE RACK MOUNTABLE AND LOCATED IN RLWTF CONTROL ROOM. ALL SYSTEM REPORTS AND DATA STORAGE WILL OCCUR FROM THIS DEVICE. IT SHALL INTERFACE WITH THE FACILITY CONTROL SYSTEM. SEE SPEC FOR REQUIREMENTS SECTION 44-1100.

(8) CLEAN OUT PORT.

(9) AEROSOL INJECTION PORT FULL PORTED BALL VALVE. LOCATE PORT ADJACENT TO LADDER.

(10) SEE SHEET M-6105 FOR EXHAUST VENTILATION P&ID.

(11) SAMPLE PLANE SHALL BE LOCATED AT LEAST 10 DUCT DIAMETERS FROM TOP OF LAST DISTURBANCE.

(12) FLOW CONNECTED TO SYSTEM TIMER TO RECORD RUN TIME.

"PRIORITY DRAWING"

NO	DATE	CLASS REV	ADC	DESCRIPTION	DWN	DES	CHKD	SUB	APP

AECOM

RLWTF-UP LOW LEVEL WASTE SUBPROJECT

STACK AIR SAMPLING P&ID

DRAWN	V DAVISON
DESIGN	B SHREEVE
CHECKED	C MOYERS
DATE	5/8/14

BLDG. 230 TA-50

SUBMITTED MANNY TARIN — APPROVED FOR RELEASE ED ARTIGLIA

Los Alamos NATIONAL LABORATORY PO Box 1663 Los Alamos, New Mexico 87545

SHEET M-6106

295 OF 434

CLASSIFICATION | REVIEWER | DATE

PROJECT ID 100761 | DRAWING NO C55864 | REV 0

CHARLES MOYERS NEW MEXICO 18338 REGISTERED PROFESSIONAL ENGINEER 05-08-14

STACK AIR SAMPLING P&ID
SCALE: NONE

File Location: P:\RLWTF LOW-LEVEL WASTE FACILITY\500 CAD\C55864 MAIN BUILDING\SHEETS\15 MECHANICAL\55864-M-6106-R0.DWG
Plotted By: MOORE, STEPHEN Plot Date: Monday, May 05, 2014

SEQUENCE OF OPERATIONS

THERE ARE TWO AIR HANDLING UNITS (HVA-5321 AND HVA-5322) SUPPLYING CONDITIONED AIR TO THE BUILDING THESE OPERATE CONTINUOUSLY. TWO EXHAUST FANS IN A LEAD/LAG ARRANGEMENT (FE-5309 AND FE-5310) PROVIDE VENTILATION AND BUILDING STATIC PRESSURE CONTROL. ONE FAN ALSO OPERATES CONTINUOUSLY. THE CHANGE ROOM EXHAUST FAN (FE-5323) OPERATES CONTINUOUSLY. THE FAN MANAGER WILL MONITOR THE BUILDING STATIC PRESSURE IN AND WILL PROVIDE AN INTEGRATED CONTROL OF ALL THE AIR MOVING EQUIPMENT THAT IS ASSOCIATED WITH BUILDING STATIC PRESSURE. THE AIR HANDLING UNITS AND ALL EXHAUST FANS WILL BE UNDER THE CONTROL OF THE FAN MANAGER.

PROVIDE SEQUENTIAL START FOR ALL EQUIPMENT. APPROPRIATE TIME DELAYS TO BE IMPLEMENTED BY THE BAS TO ALLOW TO EQUIPMENT TO START WITHOUT OVERLAPPING INRUSH CURRENTS. UPON A CALL TO START THE EQUIPMENT, THE LEAD EXHAUST FAN SHALL START. AFTER A 5 SECOND DELAY (ADJ.) HVA-5321 AND HVA-5322 SUPPLY FANS SHALL BE COMMANDED ON SIMULTANEOUSLY WITH FE-5323.

EXHAUST FANS (FE-5309 AND FE-5310).

RUN CONDITIONS – INTERLOCKS:

I-1 INTERLOCK TO HVA-5321 AND HVA-5322; SUPPLY FANS SHALL BE DISABLED ON LOSS OF EXHAUST FANS, AND STARTED UPON COMMAND TO START EXHAUST FANS.

I-3 INTERLOCK MOTOR OPERATED ISOLATION DAMPERS SHALL BE FULLY OPEN UPON CALL TO START LEAD EXHAUST FAN; MOTOR OPERATED DAMPERS SHALL CLOSE UPON EXHAUST FAN FAILURE OR COMMAND OFF.

I-4 INTERLOCK TO CAMS; ON DETECTION OF HIGH RADIATION LEVELS, EXHAUST AND SUPPLY FANS SHALL BE COMMANDED OFF AND ISOLATION DAMPERS CLOSED.

I-5 HARD WIRED INTERLOCK TO PREVENT VFD OPERATION WHEN MOTOR DISCONNECT IS NOT CLOSED.

RUN CONDITIONS:
THE UNIT(S) FE-5309 AND FE-5310 EXHAUST FANS SHALL BE ENABLED.

EXHAUST FAN LEAD/STANDBY OPERATION:
THE TWO EXHAUST FANS SHALL OPERATE IN A LEAD/STANDBY FASHION.

- THE LEAD EXHAUST FAN SHALL RUN FIRST AFTER EXHAUST AIR DAMPERS ARE COMMANDED OPEN AND POSITION IS CONFIRMED.
- ON FAILURE OF THE LEAD EXHAUST FAN, THE STANDBY EXHAUST AIR DAMPERS SHALL BE COMMANDED OPEN AND THE STANDBY EXHAUST FAN SHALL RUN; THE LEAD EXHAUST FAN SHALL TURN OFF AND EXHAUST AIR DAMPERS COMMANDED CLOSED.

THE DESIGNATED LEAD EXHAUST FAN SHALL ROTATE UPON ONE OF THE FOLLOWING CONDITIONS (USER SELECTABLE):

- MANUALLY THROUGH A SOFTWARE SWITCH
- IF FAN RUNTIME (ADJ.) IS EXCEEDED
- DAILY
- WEEKLY
- MONTHLY

ALARMS SHALL BE PROVIDED AS FOLLOWS:

- EXHAUST FAN FE-5309
  - FAILURE: COMMANDED ON, BUT THE STATUS IS OFF.
  - RUNNING IN HAND: COMMANDED OFF, BUT THE STATUS IS ON.
  - RUNTIME EXCEEDED: STATUS RUNTIME EXCEEDS A USER DEFINABLE LIMIT.
- EXHAUST FAN FE-5310
  - FAILURE: COMMANDED ON, BUT THE STATUS IS OFF.
  - RUNNING IN HAND: COMMANDED OFF, BUT THE STATUS IS ON.
  - RUNTIME EXCEEDED: STATUS RUNTIME EXCEEDS A USER DEFINABLE LIMIT.

CONTROL – EXHAUST DUCT STATIC PRESSURE:
THE EXHAUST FAN SHALL RUN WHEN COMMANDED ON.

THE CONTROLLER SHALL MEASURE DUCT STATIC PRESSURE AND MODULATE THE EXHAUST FAN VFD SPEED TO MAINTAIN THE AVERAGE EXHAUST DUCT STATIC PRESSURE AS MEASURED AT PIC-5358 AT SETPOINT OF 8 IN. H20 (ADJ.). THE EXHAUST FAN VFD SPEED SHALL NOT DROP BELOW 20% (ADJ.).

ALARMS SHALL BE PROVIDED AS FOLLOWS:

- HIGH DUCT STATIC PRESSURE: IF THE DUCT STATIC PRESSURE IS 25% (ADJ.) GREATER THAN SETPOINT.
- LOW DUCT STATIC PRESSURE: IF THE DUCT STATIC PRESSURE IS 25% (ADJ.) LESS THAN SETPOINT.
- EXHAUST FAN VFD FAULT.

EXHAUST AIR DAMPER:
THE EXHAUST AIR DAMPER SHALL OPEN ANYTIME THE UNIT RUNS AND SHALL CLOSE ANYTIME THE UNIT STOPS. THE EXHAUST AIR DAMPER SHALL CLOSE 30 SEC (ADJ.) AFTER THE FAN STOPS.

FILTER DIFFERENTIAL PRESSURE MONITOR:
THE CONTROLLER SHALL MONITOR THE DIFFERENTIAL PRESSURE ACROSS THE FILTER.

ALARMS SHALL BE PROVIDED AS FOLLOWS:

- FILTER CHANGE REQUIRED: FILTER DIFFERENTIAL PRESSURE EXCEEDS A USER DEFINABLE LIMIT (ADJ.).

DAMPER STATUS:
THE FAN SHALL BE ENABLED AFTER THE DAMPER STATUS HAS PROVEN.

ALARMS SHALL BE PROVIDED AS FOLLOWS:

- DAMPER FAILURE: COMMANDED OPEN, BUT THE STATUS IS CLOSED.
- DAMPER IN HAND: COMMANDED CLOSED, BUT THE STATUS IS OPEN.

FAN STATUS:

THE CONTROLLER SHALL MONITOR THE FAN STATUS.

ALARMS SHALL BE PROVIDED AS FOLLOWS:

- FAN FAILURE: COMMANDED ON, BUT THE STATUS IS OFF.
- FAN IN HAND: COMMANDED OFF, BUT THE STATUS IS ON.
- FAN RUNTIME EXCEEDED: FAN STATUS RUNTIME EXCEEDS A USER DEFINABLE LIMIT (ADJ.).

	HARDWARE POINTS				SOFTWARE POINTS					
POINT NAME	AI	AO	BI	BO	AV	BV	SCHED	TREND	ALARM	SHOW ON GRAPHIC
BUILDING STATIC PRESSURE	X							X		X
FILTER DIFFERENTIAL PRESSURE	X							X		X
FAN VFD SPEED		X						X		X
FAN VFD FAULT			X						X	X
EXHAUST AIR DAMPER STATUS			X					X		X
FAN STATUS			X					X		X
FAN START/STOP				X				X		X
EXHAUST AIR DAMPER				X				X		X
BUILDING STATIC PRESSURE SETPOINT					X			X		X
HIGH BUILDING STATIC PRESSURE									X	
LOW BUILDING STATIC PRESSURE									X	
FILTER CHANGE REQUIRED									X	
EXHAUST AIR DAMPER FAILURE									X	
EXHAUST AIR DAMPER IN HAND									X	
FAN FAILURE									X	
FAN IN HAND									X	
FAN RUNTIME EXCEEDED									X	
EXHAUST FLOW	X							X	X	X
FIRE ALARM			X						X	
TOTALS	3	1	4	2	1	0	0	9	11	10

TOTAL HARDWARE (10) TOTAL SOFTWARE (21)

WET CHEMISTRY LABORATORY
HEPA FILTER MAINTENANCE MODE

DURING HEPA FILTER CHANGEOUT, ONE FILTER TRAIN AND THE ASSOCIATED HOODS WILL BE ISOLATED FROM THE EXHAUST SYSTEM. THE FOLLOWING SEQUENCE WILL ALLOW CONTINUED OPERATION OF THE EXHAUST FANS (FE-5309 AND FE-5310) IN CONJUNCTION WITH HVA-5321.

MAINTENANCE MODE SHALL BE ENABLED THROUGH THE CONTROL SYSTEM. NO INTERLOCKS WILL BE BYPASSED IN THIS MODE. THE CONTROL SYSTEM WILL COMPARE THE EXHAUST FLOW RATE AND THE SUPPLY FLOW RATE. THE CONTROL SYSTEM WILL DETERMINE THE OFFSET BETWEEN SUPPLY AND EXHAUST FLOW RATE (OFFSET FLOW = FI-5341 – FI-5307). THE CONTROL SYSTEM WILL DETERMINE THE FAN SPEED OF THE OPERATING EXHAUST FAN AND THE SUPPLY FAN. THE CONTROL SYSTEM SHALL SAVE THESE VALUES TO ASSIST IN RETURN TO NORMAL OPERATING MODE. THE CONTROL SYSTEM WILL COMMAND THE SUPPLY FAN AND OPERATING EXHAUST FAN TO A FAN SPEED THAT REDUCES THE EXHAUST FLOW BY 1,420 CFM. THE CONTROL SYSTEM SHALL MAINTAIN THE SUPPLY AND EXHAUST FLOW OFFSET AT THE REDUCED SPEED. THE EXHAUST FAN SHALL BE MODULATED TO NOT EXCEED 10,485 CFM DURING THE HEPA FILTER MAINTENANCE MODE. PDIT-5333 WILL SEND A SIGNAL BACK TO THE MOTOR OPERATED DAMPER IN CAV-5333 TO MODULATE THE DAMPER TO MAINTAIN THE ROOM'S NORMAL OPERATING PRESSURE DIFFERENTIAL DURING MAINTENANCE MODE.

ONCE FILTER CHANGEOUT IS COMPLETED, NORMAL OPERATION OF THE SYSTEM SHALL BE RETURNED THROUGH THE CONTROL SYSTEM.

CAV-5333
PDIT-5333 WILL SEND A SIGNAL BACK TO THE MOTOR OPERATED DAMPER IN CAV-5333 TO MODULATE THE DAMPER TO MAINTAIN THE ROOM'S NORMAL OPERATING PRESSURE DIFFERENTIAL.

CAV-5331 AND CAV-5332

PDIT-5331 WILL SEND A SIGNAL BACK TO THE MOTOR OPERATED DAMPERS IN CAV-5331 AND CAV-5332 TO MODULATE THE DAMPERS TO MAINTAIN THE ROOM'S NORMAL OPERATING PRESSURE DIFFERENTIAL.

(CONTINUED ON M-6108)

NO	DATE	CLASS REV	ADC	DESCRIPTION	DWN	DES	CHKD	SUB	APP
1	7/7/14	U		ADDED TEXT					

AECOM

RLWTF-UP LOW LEVEL WASTE SUBPROJECT

HVAC SEQUENCE OF OPERATIONS

DRAWN	V DAVISON
DESIGN	B SHREEVE
CHECKED	C MOYERS
DATE	5/8/14

BLDG. 230 TA-50

SUBMITTED: MANNY TARIN
APPROVED FOR RELEASE: ED ANTELIA

Los Alamos NATIONAL LABORATORY PO Box 1663 Los Alamos, New Mexico 87545

SHEET M-6107
296 OF 434

CLASSIFICATION | REVIEWER | DATE

PROJECT ID 100761 | DRAWING NO C55864 | REV 1

File: Lasedwg: R:\PLWTF LOW-LEVEL WASTE FACILITY\DGN CAD\C55864 MAIN BUILDING\SHEETS\15 MECHANICAL\C55864-M-6107-RELEASE
Plotted By: BECKHAM, DARLENE Plot Date: Thursday, July 03, 2014

(CONTINUED FROM M-6107)

EXHAUST FAN FE-5323

RUN CONDITIONS – INTERLOCKS:

I-1 INTERLOCK TO HVA-5321 AND HVA-5322; EXHAUST FANS SHALL BE DISABLED ON LOSS OF SUPPLY FANS

I-2 INTERLOCK WITH FIRE ALARM CONTROL PANEL; ON DETECTION OF EXTERIOR BUILDING SMOKE, EXHAUST FAN SHALL BE COMMANDED OFF AND FSD-5353 CLOSES.

RUN CONDITIONS:
THE UNIT FE-5323 EXHAUST FAN SHALL BE ENABLED. FE-5323 RUNS CONTINUOUSLY.

FAN STATUS:
THE CONTROLLER SHALL MONITOR THE FAN STATUS.

ALARMS SHALL BE PROVIDED AS FOLLOWS:

- FAN FAILURE: COMMANDED ON, BUT THE STATUS IS OFF.
- FAN IN HAND: COMMANDED OFF, BUT THE STATUS IS ON.

	HARDWARE POINTS				SOFTWARE POINTS					
POINT NAME	AI	AO	BI	BO	AV	BV	SCHED	TREND	ALARM	SHOW ON GRAPHIC
FAN STATUS			X					X		X
FAN START/STOP				X				X		X
FAN FAILURE									X	
FAN IN HAND									X	
TOTALS	0	0	1	1	0	0	0	2	2	2

TOTAL HARDWARE (2) TOTAL SOFTWARE (4)

HVA-5321

RUN CONDITIONS – INTERLOCKED:
I-1 HVA-5321 SHALL BE SOFTWARE INTERLOCKED TO RUN WHENEVER FE-5309 OR FE-5310 RUNS UNLESS SHUTDOWN ON SAFETIES.

I-2 SOFTWARE INTERLOCK FIRE ALARM CONTROL PANEL; HVA-5321 SHALL SHUT DOWN UPON DETECTION OF BUILDING SMOKE.

I-4 SOFTWARE INTERLOCK TO CAMS; ON DETECTION OF HIGH RADIATION LEVELS, EXHAUST AND SUPPLY FANS SHALL BE COMMANDED OFF AND ISOLATION DAMPERS CLOSED.

1-5 HARD WIRED INTERLOCK TO PREVENT VFD OPERATION WHEN MOTOR DISCONNECT IS NOT CLOSED.

EMERGENCY SHUTDOWN:
THE UNIT SHALL SHUT DOWN AND GENERATE AN ALARM UPON RECEIVING AN EMERGENCY SHUTDOWN SIGNAL.

FREEZE PROTECTION:
THE UNIT SHALL SHUT DOWN AND GENERATE AN ALARM UPON RECEIVING A FREEZESTAT STATUS.

SMOKE DETECTION:
THE UNIT SHALL SHUT DOWN UPON RECEIVING A SMOKE DETECTION SIGNAL FROM THE BAS.

HEAT RECOVERY – RUN-AROUND LOOP COILS:

HEAT RECOVERY PUMP LEAD/STANDBY OPERATION (PHW-5313 AND PHW-5314):
THE TWO HEAT RECOVERY PUMPS SHALL OPERATE IN A LEAD/STANDBY FASHION.

- THE LEAD PUMP SHALL RUN FIRST.
- ON FAILURE OF THE LEAD PUMP, THE STANDBY PUMP SHALL RUN AND THE LEAD PUMP SHALL TURN OFF.

THE DESIGNATED LEAD PUMP SHALL ROTATE UPON ONE OF THE FOLLOWING CONDITIONS (USER SELECTABLE):

- MANUALLY THROUGH A SOFTWARE SWITCH
- IF PUMP RUNTIME (ADJ.) IS EXCEEDED
- DAILY
- WEEKLY
- MONTHLY

ALARMS SHALL BE PROVIDED AS FOLLOWS:

- HEAT RECOVERY PUMP 1
  - FAILURE: COMMANDED ON, BUT THE STATUS IS OFF.
  - RUNNING IN HAND: COMMANDED OFF, BUT THE STATUS IS ON.
  - RUNTIME EXCEEDED: STATUS RUNTIME EXCEEDS A USER DEFINABLE LIMIT.
- HEAT RECOVERY PUMP 2
  - FAILURE: COMMANDED ON, BUT THE STATUS IS OFF.
  - RUNNING IN HAND: COMMANDED OFF, BUT THE STATUS IS ON.
  - RUNTIME EXCEEDED: STATUS RUNTIME EXCEEDS A USER DEFINABLE LIMIT.

THE CONTROLLER SHALL RUN THE RUN-AROUND LOOP PUMP AND MODULATE THE FOR ENERGY RECOVERY AS FOLLOWS.

COOLING RECOVERY MODE:
THE CONTROLLER SHALL MEASURE THE DISCHARGE AIR TEMPERATURE (DOWNSTREAM OF THE OUTSIDE AIR COIL) AND MODULATE THE PUMP SPEED TO MAINTAIN A SETPOINT 2'F (ADJ.) LESS THAN THE UNIT SUPPLY AIR TEMPERATURE SETPOINT. THE RUN-AROUND LOOP SHALL RUN

FOR COOLING RECOVERY WHENEVER:

- EXHAUST AIR TEMPERATURE IS 5'F (ADJ.) OR MORE BELOW THE OUTSIDE AIR TEMPERATURE.
- AND THE UNIT IS IN A COOLING MODE
- AND THE SUPPLY FAN IS ON
- AND THE EXHAUST FAN IS ON

HEAT RECOVERY MODE:
THE CONTROLLER SHALL MEASURE THE DISCHARGE AIR TEMPERATURE (DOWNSTREAM OF THE OUTSIDE AIR COIL) AND MODULATE THE PUMP SPEED TO MAINTAIN A SETPOINT 2'F (ADJ.) GREATER THAN THE UNIT SUPPLY AIR TEMPERATURE SETPOINT. THE RUN-AROUND LOOP SHALL RUN FOR HEAT RECOVERY WHENEVER:

- EXHAUST AIR TEMPERATURE IS 5'F (ADJ.) OR MORE ABOVE THE OUTSIDE AIR TEMPERATURE.
- AND THE UNIT IS IN A HEATING MODE.
- AND THE SUPPLY FAN IS ON.
- AND THE EXHAUST FAN IS ON.

FROST PROTECTION:
THE RUN-AROUND LOOP PUMP SHALL RUN IN ORDER TO CIRCULATE LESS WATER THROUGH THE SUPPLY AIR HEAT RECOVERY COIL WHENEVER:

- RUN-AROUND LOOP TEMPERATURE DROPS BELOW 35'F (ADJ.)
- OR THE EXHAUST AIR TEMPERATURE DROPS BELOW 30'F (ADJ.).

ALARMS SHALL BE PROVIDED AS FOLLOWS:

- RUN-AROUND LOOP PUMP FAILURE: COMMANDED ON, BUT THE STATUS IS OFF.
- RUN-AROUND LOOP PUMP IN HAND: COMMANDED OFF, BUT THE STATUS IS ON.
- RUN-AROUND LOOP PUMP RUNTIME EXCEEDED: STATUS RUNTIME EXCEEDS A USER DEFINABLE LIMIT (ADJ.).

SUPPLY FAN:
THE SUPPLY FAN SHALL RUN ANYTIME THE UNIT IS COMMANDED TO RUN. TO PREVENT SHORT CYCLING, THE SUPPLY FAN SHALL HAVE A USER DEFINABLE (ADJ.) MINIMUM RUNTIME, UNLESS SHUTDOWN ON SAFETIES.

SUPPLY STATIC PRESSURE CONTROL:

SUPPLY FAN VOLUME IS CONTROLLED TO MAINTAIN THE DUCT STATIC PRESSURE AT SETPOINT AS SENSED AT A STATIC PRESSURE SENSOR NEAR THE AHU (AT FAST SCAN RATE). THIS SETPOINT IS UPDATED (AT A SLOWER RATE) BY REMOTE STATIC PRESSURE SENSOR. NOTE: THE STATIC PRESSURES AT THE TWO SENSORS ARE NOT THE SAME DUE TO THEIR LOCATION IN DUCT SYSTEM. OBTAIN VALUES FROM TEST AND BALANCE CONTRACTOR FOR SENSOR FARTHEST FROM AHU.

ENSURE THAT THE STATIC PRESSURE SIGNAL IS COMMUNICATED QUICKLY TO THE CONTROL LOOP (AND NOT DELAYED DUE TO NETWORK TIMING) AND THAT A DEFAULT VALUE IS SET IN THE EVENT OF A NETWORK FAILURE.

CONTROL DUCT PRESSURE AT AHU

INITIATE START FAN COMMAND BEFORE START SIGNAL SENT TO VFD

RUN TIMER SHOULD LIMIT INITIAL START UP TO 50% FULL POWER (RAMP UP WITHOUT OVERSHOOTING)

RAMP-UP AND RAMP-DOWN INCREMENTAL CHANGES SHALL BE EQUAL.

USE PID LOOP TO CONTROL FANS SPEED BASED ON STATIC PRESSURE SETPOINT.

VARIABLE SPEED DRIVE ACCELERATION SETTINGS, DECELERATION SETTINGS, MINIMUM SPEEDS, ETC. SHALL BE ADJUSTED AT START UP IN COORDINATION WITH THE DRIVE SUPPLIER AND INSTALLER TO ACHIEVE STABLE CONTROL SYSTEM PERFORMANCE.

FAN SPEED IS RESET TO 0 (ZERO) HZ WHEN THE AHU IS OFF.
IF REMOTE STATIC PRESSURE SENSOR MEASURES A RAPID DECREASE IN PRESSURE OR NO PRESSURE AS A RESULT OF A FIRE/MOKE DAMPER CLOSURE (WHILE THE FAN IS OPERATING – "ON"), RESET FAN SPEED TO 0 (ZERO) HZ. ENSURE THIS CONTROL LOOP DOES NOT SHUT FAN SYSTEM DOWN DURING SYSTEM START UP. SOFTWARE RESET IS REQUIRED BEFORE FAN SYSTEM CAN OPERATE.

ALARMS SHALL BE PROVIDED AS FOLLOWS:

- SUPPLY FAN FAILURE: COMMANDED ON, BUT THE STATUS IS OFF.
- SUPPLY FAN IN HAND: COMMANDED OFF, BUT THE STATUS IS ON.
- SUPPLY FAN RUNTIME EXCEEDED: STATUS RUNTIME EXCEEDS A USER DEFINABLE LIMIT (ADJ.).

SUPPLY AIR TEMPERATURE SETPOINT – FIXED:
THE CONTROLLER SHALL MONITOR THE SUPPLY AIR TEMPERATURE AND SHALL MAINTAIN A FIXED SUPPLY AIR TEMPERATURE SETPOINT OF 55'F (ADJ.).

COOLING COIL VALVE:
THE CONTROLLER SHALL MEASURE THE SUPPLY AIR TEMPERATURE AND MODULATE THE COOLING COIL VALVE TO MAINTAIN ITS COOLING SETPOINT.

THE COOLING SHALL BE ENABLED WHENEVER:

- OUTSIDE AIR TEMPERATURE IS GREATER THAN 60'F (ADJ.).
- AND THE SUPPLY AIR TEMPERATURE IS ABOVE COOLING SETPOINT.
- AND THE FAN STATUS IS ON.

THE COOLING COIL VALVE SHALL OPEN TO 50% (ADJ.) WHENEVER THE FREEZESTAT IS ON.

HEATING COIL VALVE:
THE CONTROLLER SHALL MEASURE THE SUPPLY AIR TEMPERATURE, FULLY OPEN THE HEATING COIL VALVE, ENERGIZE THE HEATING COIL PUMP, AND MODULATE THE FACE AND BYPASS DAMPERS TO MAINTAIN ITS HEATING SETPOINT.

THE HEATING SHALL BE ENABLED WHENEVER:

- OUTSIDE AIR TEMPERATURE IS LESS THAN 65'F (ADJ.).
- AND THE SUPPLY AIR TEMPERATURE IS BELOW HEATING SETPOINT.
- AND THE FAN STATUS IS ON

THE HEATING COIL VALVE SHALL OPEN TO 100% (ADJ.) WHENEVER THE FREEZESTAT IS ON.

HEATING COIL PUMP:
THE RECIRCULATION PUMP SHALL RUN WHENEVER:

- THE HEATING COIL VALVE IS ENABLED.
- OR THE FREEZESTAT (IF PRESENT) IS ON.

ALARMS SHALL BE PROVIDED AS FOLLOWS:

- HEATING COIL PUMP FAILURE: COMMANDED ON, BUT THE STATUS IS OFF.
- HEATING COIL PUMP IN HAND: COMMANDED OFF, BUT THE STATUS IS ON.
- HEATING COIL PUMP RUNTIME EXCEEDED: STATUS RUNTIME EXCEEDS A USER DEFINABLE LIMIT.

PREFILTER DIFFERENTIAL PRESSURE MONITOR:
THE CONTROLLER SHALL MONITOR THE DIFFERENTIAL PRESSURE ACROSS THE PREFILTER.

- ALARMS SHALL BE PROVIDED AS FOLLOWS:
- PREFILTER CHANGE REQUIRED: PREFILTER DIFFERENTIAL PRESSURE EXCEEDS A USER DEFINABLE LIMIT (ADJ.).

FINAL FILTER DIFFERENTIAL PRESSURE MONITOR:
THE CONTROLLER SHALL MONITOR THE DIFFERENTIAL PRESSURE ACROSS THE FINAL FILTER.

ALARMS SHALL BE PROVIDED AS FOLLOWS:

- FINAL FILTER CHANGE REQUIRED: FINAL FILTER DIFFERENTIAL PRESSURE EXCEEDS A USER DEFINABLE LIMIT (ADJ.).

SUPPLY AIR TEMPERATURE:
THE CONTROLLER SHALL MONITOR THE SUPPLY AIR TEMPERATURE.

ALARMS SHALL BE PROVIDED AS FOLLOWS:

- HIGH SUPPLY AIR TEMP: IF THE SUPPLY AIR TEMPERATURE IS GREATER THAN 120'F (ADJ.).
- LOW SUPPLY AIR TEMP: IF THE SUPPLY AIR TEMPERATURE IS LESS THAN 45'F (ADJ.).

(CONTINUED ON M-6109)

NO	DATE	CLASS REV	ADC	DESCRIPTION	DWN	DES	CHKD	SUB	APP

AECOM

RLWTF-UP LOW LEVEL WASTE SUBPROJECT

HVAC SEQUENCE OF OPERATIONS

DRAWN	V DAWSON	VVD	5/8/14
DESIGN	B SHREEVE	BLS	
CHECKED	C MOYERS	CWM	
DATE	5/8/14		

BLDG. 230 TA-50

SUBMITTED MANNY TARIN

APPROVED FOR RELEASE ED ARTIOLA

Los Alamos NATIONAL LABORATORY PO Box 1663 Los Alamos, New Mexico 87545

SHEET M-6108

297 OF 434

CLASSIFICATION REVIEWER DATE

PROJECT ID 100761 DRAWING NO C55864 REV 0

CHARLES MOYERS NEW MEXICO 16838 REGISTERED PROFESSIONAL ENGINEER

05-07-14

File Location: P:\RLWTF LOW-LEVEL WASTE FACILITY\DGN C55864 MAIN BUILDING\SHEETS\13 MECHANICAL\55864-M-6108-R0.DWG
Plotted By: DARRIAL WHEELOCK Plot Date: Wednesday, May 14, 2014

8121 8

(CONTINUED FROM M-6108)

POINT NAME	HARDWARE POINTS AI	AO	BI	BO	SOFTWARE POINTS AV	BV	SCHED	TREND	ALARM	SHOW ON GRAPHIC
RUN-AROUND LOOP COIL DISCHARGE AIR TEMP	X							X		X
OUTSIDE AIR TEMP	X							X		X
RETURN AIR TEMP	X							X		X
EXHAUST AIR TEMP	X							X		X
PREFILTER DIFFERENTIAL PRESSURE	X							X		
FINAL FILTER DIFFERENTIAL PRESSURE	X							X		
SUPPLY AIR TEMP	X							X		X
COOLING VALVE		X						X		X
HEATING VALVE		X						X		X
FREEZESTAT			X					X	X	X
SMOKE DETECTOR			X					X	X	X
RUN-AROUND LOOP PUMP STATUS			X					X		X
SUPPLY FAN STATUS			X					X		X
FAN VFD SPEED		X						X	X	X
FAN VFD FAULT			X						X	X
SUPPLY AIR FLOW		X						X	X	X
HEATING COIL PUMP STATUS			X					X		X
RUN-AROUND LOOP PUMP START/STOP				X				X		X
SUPPLY FAN START/STOP				X				X		X
HEATING COIL PUMP START/STOP				X				X		X
SUPPLY AIR TEMP SETPOINT					X			X		X
EMERGENCY SHUTDOWN						X		X	X	X
RUN-AROUND LOOP PUMP FAILURE									X	
RUN-AROUND LOOP PUMP IN HAND									X	
RUN-AROUND LOOP PUMP RUNTIME EXCEEDED									X	
SUPPLY FAN FAILURE									X	
SUPPLY FAN IN HAND									X	
SUPPLY FAN RUNTIME EXCEEDED									X	
HEATING COIL PUMP IN HAND									X	
HEATING COIL PUMP FAILURE									X	
HEATING COIL PUMP RUNTIME EXCEEDED									X	
PREFILTER CHANGE REQUIRED									X	X
FINAL FILTER CHANGE REQUIRED									X	X
HIGH SUPPLY AIR TEMP									X	
LOW SUPPLY AIR TEMP									X	
TOTALS	8	5	6	3	1	1	0	22	20	24

TOTAL HARDWARE (22) TOTAL SOFTWARE (44)

HVA-5322

RUN CONDITIONS – INTERLOCKED:
I-1 HVA-5322 SHALL BE INTERLOCKED TO RUN WHENEVER FE-5309 OR FE-5310 RUNS UNLESS SHUTDOWN ON SAFETIES.

I-2 FIRE ALARM CONTROL PANEL; HVA-5322 SHALL SHUT DOWN UPON DETECTION OF EXTERIOR BUILDING SMOKE.

EMERGENCY SHUTDOWN:
THE UNIT SHALL SHUT DOWN AND GENERATE AN ALARM UPON RECEIVING AN EMERGENCY SHUTDOWN SIGNAL.

FREEZE PROTECTION:
THE UNIT SHALL SHUT DOWN AND GENERATE AN ALARM UPON RECEIVING A FREEZESTAT STATUS.

SMOKE DETECTION:
THE UNIT SHALL SHUT DOWN UPON RECEIVING A SMOKE DETECTION SIGNAL FROM THE FIRE ALARM CONTROL PANEL.

SUPPLY FAN:
THE SUPPLY FAN SHALL RUN ANYTIME THE UNIT IS COMMANDED TO RUN. TO PREVENT SHORT CYCLING, THE SUPPLY FAN SHALL HAVE A USER DEFINABLE (ADJ.) MINIMUM RUNTIME, UNLESS SHUTDOWN ON SAFETIES.

ALARMS SHALL BE PROVIDED AS FOLLOWS:

- SUPPLY FAN FAILURE: COMMANDED ON, BUT THE STATUS IS OFF.
- SUPPLY FAN IN HAND: COMMANDED OFF, BUT THE STATUS IS ON.
- SUPPLY FAN RUNTIME EXCEEDED: STATUS RUNTIME EXCEEDS A USER DEFINABLE LIMIT (ADJ.).

SUPPLY AIR TEMPERATURE SETPOINT – FIXED:
THE CONTROLLER SHALL MONITOR THE SUPPLY AIR TEMPERATURE AND SHALL MAINTAIN A FIXED SUPPLY AIR TEMPERATURE SETPOINT OF 55°F (ADJ.).

COOLING COIL VALVE:
THE CONTROLLER SHALL MEASURE THE SUPPLY AIR TEMPERATURE AND MODULATE THE COOLING COIL VALVE TO MAINTAIN ITS COOLING SETPOINT.

THE COOLING SHALL BE ENABLED WHENEVER:

- OUTSIDE AIR TEMPERATURE IS GREATER THAN 60°F (ADJ.).
- AND THE SUPPLY AIR TEMPERATURE IS ABOVE COOLING SETPOINT.
- AND THE FAN STATUS IS ON.

THE COOLING COIL VALVE SHALL OPEN TO 50% (ADJ.) WHENEVER THE FREEZESTAT IS ON.

HEATING COIL VALVE:
THE CONTROLLER SHALL MEASURE THE SUPPLY AIR TEMPERATURE AND MODULATE THE HEATING COIL VALVE TO MAINTAIN ITS HEATING SETPOINT.

THE HEATING SHALL BE ENABLED WHENEVER:

- OUTSIDE AIR TEMPERATURE IS LESS THAN 65°F (ADJ.).
- AND THE SUPPLY AIR TEMPERATURE IS BELOW HEATING SETPOINT.
- AND THE FAN STATUS IS ON.

THE HEATING COIL VALVE SHALL OPEN TO 100% (ADJ.) WHENEVER THE FREEZESTAT IS ON.

PREFILTER DIFFERENTIAL PRESSURE MONITOR:
THE CONTROLLER SHALL MONITOR THE DIFFERENTIAL PRESSURE ACROSS THE PREFILTER.

ALARMS SHALL BE PROVIDED AS FOLLOWS:

- PREFILTER CHANGE REQUIRED: PREFILTER DIFFERENTIAL PRESSURE EXCEEDS A USER DEFINABLE LIMIT (ADJ.).

FINAL FILTER DIFFERENTIAL PRESSURE MONITOR:
THE CONTROLLER SHALL MONITOR THE DIFFERENTIAL PRESSURE ACROSS THE FINAL FILTER.

ALARMS SHALL BE PROVIDED AS FOLLOWS:

- FINAL FILTER CHANGE REQUIRED: FINAL FILTER DIFFERENTIAL PRESSURE EXCEEDS A USER DEFINABLE LIMIT (ADJ.).

SUPPLY AIR TEMPERATURE:
THE CONTROLLER SHALL MONITOR THE SUPPLY AIR TEMPERATURE.

ALARMS SHALL BE PROVIDED AS FOLLOWS:

- HIGH SUPPLY AIR TEMP: IF THE SUPPLY AIR TEMPERATURE IS GREATER THAN 120°F (ADJ.).
- LOW SUPPLY AIR TEMP: IF THE SUPPLY AIR TEMPERATURE IS LESS THAN 45°F (ADJ.).

(CONTINUED ON M-6110)

NO	DATE	CLASS REV	ADC	DESCRIPTION	DWN	DES	CHKD	SUB	APP

AECOM

RLWTF-UP LOW LEVEL WASTE SUBPROJECT

HVAC SEQUENCE OF OPERATIONS

BLDG. 230 TA-50

DRAWN	V DAVISON	DATE	5/8/14
DESIGN	B SHREEVE		
CHECKED	C MOYERS		

SUBMITTED MANNY TARIN

APPROVED FOR RELEASE ED ARTIGUA

Los Alamos NATIONAL LABORATORY PO Box 1663 Los Alamos, New Mexico 87545

SHEET M-6109

298 OF 434

CLASSIFICATION REVIEWER DATE

PROJECT ID 100761 DRAWING NO C55864 REV 0

CHARLES MOYERS NEW MEXICO 19638 REGISTERED PROFESSIONAL ENGINEER 05-09-14

Sheet: 1 2 3 4 9

File Location: P:\RLWTF LOW-LEVEL WASTE FACILITY\000 CAD\C55864 MAIN BUILDING\SHEETS\13 MECHANICAL\55864-M-6109-R0.DWG
Plotted By: SHEDDL WARDEN Plot Date: Wednesday, May 14, 2014

(CONTINUED FROM M-6109)

POINT NAME	HARDWARE POINTS AI	AO	BI	BO	SOFTWARE POINTS AV	BV	SCHED	TREND	ALARM	SHOW ON GRAPHIC
OUTSIDE AIR TEMP	X							X		X
RETURN AIR TEMP	X							X		X
PREFILTER DIFFERENTIAL PRESSURE		X						X		X
FINAL FILTER DIFFERENTIAL PRESSURE		X						X		X
SUPPLY AIR TEMP			X					X	X	X
COOLING VALVE			X					X	X	X
HEATING VALVE			X					X		X
FREEZESTAT				X				X		X
SMOKE DETECTOR					X			X		X
SUPPLY FAN STATUS						X		X	X	X
SUPPLY FAN START/STOP									X	
SUPPLY AIR TEMP SETPOINT									X	
EMERGENCY SHUTDOWN									X	
SUPPLY FAN FAILURE									X	
SUPPLY FAN IN HAND									X	
SUPPLY FAN RUNTIME EXCEEDED									X	
PREFILTER CHANGE REQUIRED									X	X
FINAL FILTER CHANGE REQUIRED									X	X
HIGH SUPPLY AIR TEMP									X	
LOW SUPPLY AIR TEMP									X	
TOTALS	5	2	3	1	1	1	0	13	10	13

TOTAL HARDWARE (11) TOTAL SOFTWARE (25)

CONSTANT AIR VOLUME – TERMINAL UNIT (CAV-5337 AND CAV-5339)

RUN CONDITIONS – SCHEDULED:
THE UNIT SHALL RUN ACCORDING TO A USER DEFINABLE TIME SCHEDULE IN THE FOLLOWING MODES:

- OCCUPIED MODE: THE UNIT SHALL MAINTAIN
  - A 75°F (ADJ.) COOLING SETPOINT
  - A 75°F (ADJ.) HEATING SETPOINT

ALARMS SHALL BE PROVIDED AS FOLLOWS:

- HIGH ZONE TEMP: IF THE ZONE TEMPERATURE IS GREATER THAN THE COOLING SETPOINT BY A USER DEFINABLE AMOUNT (ADJ.).
- LOW ZONE TEMP: IF THE ZONE TEMPERATURE IS LESS THAN THE HEATING SETPOINT BY A USER DEFINABLE AMOUNT (ADJ.).

ZONE SETPOINT ADJUST:
THE OCCUPANT SHALL BE ABLE TO ADJUST THE ZONE TEMPERATURE HEATING AND COOLING SETPOINTS AT THE ZONE SENSOR.

CONSTANT VOLUME TERMINAL UNIT – FLOW CONTROL:
THE UNIT SHALL MAINTAIN CONSTANT AIRFLOW THROUGH ONE OF THE FOLLOWING:

OCCUPIED:

- THE ZONE DAMPER SHALL MODULATE TO MAINTAIN A CONSTANT AIRFLOW (ADJ.) DISTRIBUTED INTO THE ZONE.
- WHEN ZONE TEMPERATURE IS LESS THAN ITS HEATING SETPOINT, THE CONTROLLER SHALL ENABLE HEATING TO MAINTAIN THE ZONE TEMPERATURE AT ITS HEATING SETPOINT.

REHEATING COIL VALVE:
THE CONTROLLER SHALL MEASURE THE ZONE TEMPERATURE AND MODULATE THE REHEATING COIL VALVE OPEN ON DROPPING TEMPERATURE TO MAINTAIN ITS HEATING SETPOINT.

DISCHARGE AIR TEMPERATURE:
THE CONTROLLER SHALL MONITOR THE DISCHARGE AIR TEMPERATURE.

ALARMS SHALL BE PROVIDED AS FOLLOWS:

- HIGH DISCHARGE AIR TEMP: IF THE DISCHARGE AIR TEMPERATURE IS GREATER THAN 120°F (ADJ.).
- LOW DISCHARGE AIR TEMP: IF THE DISCHARGE AIR TEMPERATURE IS LESS THAN 40°F (ADJ.).

ENVIRONMENTAL INDEX:
WHEN THE ZONE IS OCCUPIED, THE CONTROLLER WILL MONITOR THE DEVIATION OF THE ZONE TEMPERATURE FROM THE HEATING OR COOLING SETPOINT AND CALCULATE A 0 – 100% ENVIRONMENTAL INDEX WHICH GIVES AN INDICATION OF HOW WELL THE ZONE IS MAINTAINING COMFORT. THE CONTROLLER WILL ALSO CALCULATE THE PERCENTAGE OF TIME SINCE OCCUPANCY BEGAN THAT THE ENVIRONMENTAL INDEX WAS 70% OR HIGHER.

ZERO FLOW CALIBRATION:
ZERO CALIBRATION FLOW SENSOR BY CLOSING THE AIRFLOW DAMPER AND RESETTING THE SENSOR TO ZERO FLOW.

POINT NAME	HARDWARE POINTS AI	AO	BI	BO	SOFTWARE POINTS AV	BV	SCHED	TREND	ALARM	SHOW ON GRAPHIC
ZONE TEMP	X							X		X
ZONE SETPOINT ADJUST	X									X
AIRFLOW	X							X		X
DISCHARGE AIR TEMP	X							X		X
ZONE DAMPER		X								X
REHEATING VALVE		X						X		X
AIRFLOW SETPOINT					X			X		X
ENVIRONMENTAL INDEX					X			X		
PERCENT OF TIME SATISFIED					X			X		
SCHEDULE							X			
HEATING SETPOINT								X		X
COOLING SETPOINT								X		X
HIGH ZONE TEMP									X	
LOW ZONE TEMP									X	
HIGH DISCHARGE AIR TEMP									X	
LOW DISCHARGE AIR TEMP									X	
TOTALS	4	2	0	0	3	0	1	9	4	9

TOTAL HARDWARE (6) TOTAL SOFTWARE (17)

CONSTANT AIR VOLUME – TERMINAL UNIT (CAV-5331 THROUGH CAV-5336 AND CAV-5338)

RUN CONDITIONS – SCHEDULED:
THE UNIT SHALL RUN ACCORDING TO A USER DEFINABLE TIME SCHEDULE IN THE FOLLOWING MODES:

- OCCUPIED MODE: THE UNIT SHALL MAINTAIN
  - A 75°F (ADJ.) COOLING SETPOINT
  - A 72°F (ADJ.) HEATING SETPOINT.

ALARMS SHALL BE PROVIDED AS FOLLOWS:

- HIGH ZONE TEMP: IF THE ZONE TEMPERATURE IS GREATER THAN THE COOLING SETPOINT BY A USER DEFINABLE AMOUNT (ADJ.).
- LOW ZONE TEMP: IF THE ZONE TEMPERATURE IS LESS THAN THE HEATING SETPOINT BY A USER DEFINABLE AMOUNT (ADJ.).

ZONE SETPOINT ADJUST:
THE OCCUPANT SHALL BE ABLE TO ADJUST THE ZONE TEMPERATURE HEATING AND COOLING SETPOINTS AT THE ZONE SENSOR.

CONSTANT VOLUME TERMINAL UNIT – FLOW CONTROL:
THE UNIT SHALL MAINTAIN CONSTANT AIRFLOW THROUGH ONE OF THE FOLLOWING:

OCCUPIED:

- THE ZONE DAMPER SHALL MODULATE TO MAINTAIN A CONSTANT AIRFLOW (ADJ.) DISTRIBUTED INTO THE ZONE.
- WHEN ZONE TEMPERATURE IS LESS THAN ITS HEATING SETPOINT, THE CONTROLLER SHALL ENABLE HEATING TO MAINTAIN THE ZONE TEMPERATURE AT ITS HEATING SETPOINT.

REHEATING COIL VALVE:
THE CONTROLLER SHALL MEASURE THE ZONE TEMPERATURE AND MODULATE THE REHEATING COIL VALVE OPEN ON DROPPING TEMPERATURE TO MAINTAIN ITS HEATING SETPOINT.

DISCHARGE AIR TEMPERATURE:
THE CONTROLLER SHALL MONITOR THE DISCHARGE AIR TEMPERATURE.

ALARMS SHALL BE PROVIDED AS FOLLOWS:

- HIGH DISCHARGE AIR TEMP: IF THE DISCHARGE AIR TEMPERATURE IS GREATER THAN 120°F (ADJ.).
- LOW DISCHARGE AIR TEMP: IF THE DISCHARGE AIR TEMPERATURE IS LESS THAN 40°F (ADJ.).

ENVIRONMENTAL INDEX:
WHEN THE ZONE IS OCCUPIED, THE CONTROLLER WILL MONITOR THE DEVIATION OF THE ZONE TEMPERATURE FROM THE HEATING OR COOLING SETPOINT AND CALCULATE A 0 – 100% ENVIRONMENTAL INDEX WHICH GIVES AN INDICATION OF HOW WELL THE ZONE IS MAINTAINING COMFORT. THE CONTROLLER WILL ALSO CALCULATE THE PERCENTAGE OF TIME SINCE OCCUPANCY BEGAN THAT THE ENVIRONMENTAL INDEX WAS 70% OR HIGHER.

ZERO FLOW CALIBRATION:
ZERO CALIBRATION FLOW SENSOR BY CLOSING THE AIRFLOW DAMPER AND RESETTING THE SENSOR TO ZERO FLOW.

(CONTINUED ON M-6111)

CHARLES MOYERS — NEW MEXICO — 16939 — REGISTERED PROFESSIONAL ENGINEER
05-09-14

NO	DATE	CLASS REV	ADC	DESCRIPTION	DWN	DES	CHKD	SUB	APP

AECOM

RLWTF-UP LOW LEVEL WASTE SUBPROJECT

HVAC SEQUENCE OF OPERATIONS

DRAWN V DAVISON
DESIGN B SHREEVE
CHECKED C MOYERS
DATE 5/8/14

BLDG. 230 TA-50

SUBMITTED MANNY TARIN

APPROVED FOR RELEASE ED ARTIGLIA

Los Alamos NATIONAL LABORATORY — PO Box 1663 Los Alamos, New Mexico 87545

SHEET M-6110
299 OF 434

CLASSIFICATION REVIEWER DATE

PROJECT ID 100761

DRAWING NO C55864

REV 0

File Location: P:\RLWTF LOW-LEVEL WASTE FACILITY\500 CAD\C55864 MAIN BUILDING\SHEETS\15 MECHANICAL\55864-M-6110-R0.DWG
Plotted By: DAVISON, VANESSA; Plot Date: Wednesday, May 14, 2014

12350

(CONTINUED FROM M-6110)

POINT NAME	HARDWARE POINTS AI	AO	BI	BO	SOFTWARE POINTS AV	BV	SCHED	TREND	ALARM	SHOW ON GRAPHIC
ZONE TEMP	X							X		X
ZONE SETPOINT ADJUST	X									X
AIRFLOW	X							X		X
DISCHARGE AIR TEMP	X							X		X
ZONE DAMPER		X								X
REHEATING VALVE		X						X		X
AIRFLOW SETPOINT					X			X		X
ENVIRONMENTAL INDEX					X			X		
PERCENT OF TIME SATISFIED					X			X		
SCHEDULE							X			
HEATING SETPOINT								X		X
COOLING SETPOINT								X		X
HIGH ZONE TEMP									X	
LOW ZONE TEMP									X	
HIGH DISCHARGE AIR TEMP									X	
LOW DISCHARGE AIR TEMP									X	
TOTALS	4	2	0	0	3	0	1	9	4	9

TOTAL HARDWARE (6) TOTAL SOFTWARE (17)

BASEBOARD HEATER, ELECTRIC (BDE-5341 AND BDE-5342)

RUN CONDITIONS – SCHEDULED:
THE UNIT SHALL BE AVAILABLE CONTINUOUSLY:

- THE UNIT SHALL MAINTAIN A HEATING SETPOINT OF 55°F (ADJ.).

ALARMS SHALL BE PROVIDED AS FOLLOWS:

- LOW ZONE TEMP: IF THE ZONE TEMPERATURE IS LESS THAN THE HEATING SETPOINT BY A USER DEFINABLE AMOUNT (ADJ.).

ZONE SETPOINT ADJUST:
THE OCCUPANT SHALL BE ABLE TO ADJUST THE ZONE TEMPERATURE HEATING AND COOLING SETPOINTS AT THE ZONE SENSOR.

FAN:
THE FAN SHALL RUN ANYTIME THE ZONE TEMPERATURE DROPS BELOW HEATING SETPOINT, UNLESS SHUTDOWN ON SAFETIES.

THE HEATING SHALL BE ENABLED WHENEVER:

- AND THE ZONE TEMPERATURE IS BELOW HEATING SETPOINT.
- AND THE FAN IS ON.

ZONE PRESSURE CONTROL

RUN CONDITIONS – SCHEDULED:
PRESSURE CONTROL SHALL BE AVAILABLE CONTINUOUSLY:

- 1011 ZONE SETPOINT OF –0.25 INCHES WATER GAUGE (ADJ.).
- 1009 ZONE SETPOINT OF –0.10 INCHES WATER GAUGE (ADJ.).
- 1010 AND 1012 ZONE SETPOINT OF –0.20 INCHES WATER GAUGE (ADJ.).

ZONE PRESSURE CONTROL WILL BE ACCOMPLISHED BY MODULATING THE EXHAUST DAMPERS (MOD-5314 AND MOD-5315) TO MAINTAIN PRESSURE SETPOINT. THE CONTROL LOOP SHALL INCLUDE A BUILT-IN DELAY (ADJ.) TO PREVENT ERRATIC DAMPER OPERATION WHEN DOORS ETC ARE OPENED BETWEEN ZONES.

DUCTLESS SPLIT SYSTEM HEAT PUMPS (ACR-5326 AND ACR-5327)

RUN CONDITIONS

EITHER ACR-5326 OR ACR-5327 OPERATE CONTINUOUSLY IN A LEAD/STANDBY FASHION.

THE UNIT SHALL MAINTAIN A 75 °F (ADJ.) COOLING SETPOINT AND A 64 °F (ADJ.) HEATING SETPOINT.

IF THE TEMPERATURE SENSED BY THE ROOM TEMPERATURE SENSOR EXCEEDS 75 °F, THE CONTROL SYSTEM SHALL SHUT DOWN THE LEAD ACR, START THE STANDBY ACR AND ISSUE AN ALARM.

DUCTLESS SPLIT SYSTEM HEAT PUMP (ACR-5328)

RUN CONDITIONS

THE UNIT SHALL MAINTAIN A 84°F (ADJ.) COOLING SETPOINT AND A 50°F (ADJ.) HEATING SETPOINT.

ALARMS SHALL BE PROVIDED AS FOLLOWS:

- LOW ZONE TEMPERATURE IF THE ZONE TEMPERATURE IS LESS THAN THE HEATING SETPOINT BY A USER DEFINABLE AMOUNT (ADJ.).
- HIGH ZONE TEMPERATURE IS GREATER THAN THE COOLING SETPOINT BY A USER DEFINABLE AMOUNT (ADJ.).

NO	DATE	CLASS REV	ADC	DESCRIPTION	DWN	DES	CHKD	SUB	APP

AECOM

RLWTF-UP LOW LEVEL WASTE SUBPROJECT

HVAC SEQUENCE OF OPERATIONS

DRAWN V DAVISON
DESIGN B SHREEVE
CHECKED C MOYERS
DATE 5/8/14

BLDG. 230 TA-50

SUBMITTED MANNY TARIN
APPROVED FOR RELEASE ED ARTIGLIA

Los Alamos NATIONAL LABORATORY PO Box 1663 Los Alamos, New Mexico 87545

SHEET M-6111
300 OF 434

CLASSIFICATION REVIEWER DATE

PROJECT ID 100761
DRAWING NO C55864
REV 0

CHARLES MOYERS NEW MEXICO 18838 REGISTERED PROFESSIONAL ENGINEER
05-07-14

File Location: P:\RLWTF LOW-LEVEL WASTE FACILITY\300 CAD\C55864 MAIN BUILDING\SHEETS\13 MECHANICAL\55864-M-6111-RO.DWG
Plotted By: DAVISON, VANESSA; Plot Date: Wednesday, May 14, 2014

MECHANICAL EQUIPMENT LIST

ITEM NO.	LOCATION ROOM NO.	NO. REQUIRED	DESCRIPTION, MANUFACTURER OR APPROVED EQUAL — ALL EQUIPMENT SIZED FOR OPERATION AT 7500 FT. ELEVATION	FURNISHED BY
1 HVA-5321	LLW TREATMENT BUILDING (ROOF TOP)	1	SYMBOL NO. 1 HVA-5321 100% OUTSIDE AIR, HORIZONTAL DRAW THROUGH, OUTDOOR CENTRAL STATION AIR HANDLER WITH HEAT RECOVERY COIL (HRC) RIGHT HAND ACCESS	SUBCONTRACTOR
2 HVA-5322	LLW TREATMENT BUILDING (ROOF TOP)	1	SYMBOL NO. 2 HVA-5322 OUTDOOR CENTRAL STATION AIR HANDLER RIGHT HAND ACCESS	SUBCONTRACTOR
3 HVA-5324	LLW UTILITY BUILDING	1	SYMBOL NO. 3 HVA-5324 INDOOR GAS-FIRED MAKE-UP AIR HANDLING UNIT RIGHT HAND ACCESS.	SUBCONTRACTOR

HVA-5321

TOTAL VOL ACFM	SUPPLY ESP IN.H2O	V/HZ/PH	FAN BHP	FAN MOTOR HP	FAN RPM	FAN SECTION	COOLING SECTION	COOLING EAT DB/WB °F	COOLING LAT DB/WB °F	SENSIBLE COOLING CAP MBh	TOTAL COOLING CAP MBh	CHILLED WATER ENT TEMP °F	CHILLED WATER FLOW RATE GPM	CHILLED WATER FLUID
10,970	2.0	460/60/3	10.5	15	1,084	HORIZONTAL FRONT TOP DISCHARGE	MEDIUM W/ACCESS	89/60	51.6/47.1	340.7	340.7	45	77.3	43% PROPYLENE GLYCOL

COOLING COIL QTY	COOLING COIL ROWS	FINS PER FT	FIN MATERIAL	TUBE MATERIAL	FLUID PD FT. OF WATER	APD IN. WATER	ACCESS SECTION	HEATING SECTION	HEATING EAT DB °F	HEATING LAT DB °F	TOTAL HEATING CAP MBh
1	8	84	ALUMINUM	COPPER	5.05	0.21	EXTENDED MED. W/ACCESS	INTEGRAL FACE AND BYPASS	-10	55.0	585.0

HEATING WATER ENT TEMP °F	HEATING WATER FLOW RATE GPM	HEATING WATER FLUID	HEATING COIL QTY	HEATING COIL ROWS	FINS PER FT	FIN MATERIAL	TUBE MATERIAL	FLUID PD FT. OF WATER	APD IN. WATER	FILTER SECTION	HRC COIL SECTION
180	58.4	100% WATER	1	1	90	ALUMINUM	COPPER	6.95	0.03	COMB 30% PREFILTER 85% FINAL FILTER	MEDIUM LARGE

HRC COIL SECTION NOTES	INLET SECTION	ACCESSORIES	MANUFACTURER	MODEL NUMBER	WT. (LBS.)	REMARKS
COORDINATE SECTION SIZE WITH ITEM NUMBER (57)	W/BACK INLET HOOD	14-IN HIGH ROOF CURB	TRANE	PERFORMANCE CLIMATE CHANGER UNIT SIZE 30	5,508	MOTOR SHALL BE INVERTER DUTY. WEIGHT DOES NOT INCLUDE HEAT RECOVERY COIL WEIGHT.

HVA-5322

TOTAL VOL ACFM	SUPPLY ESP IN.H2O	V/HZ/PH	FAN BHP	FAN MOTOR HP	FAN RPM	FAN SECTION	COOLING SECTION	COOLING EAT DB/WB °F	COOLING LAT DB/WB °F	SENSIBLE COOLING CAP MBh	TOTAL COOLING CAP MBh	CHILLED WATER ENT TEMP °F	CHILLED WATER FLOW RATE GPM	CHILLED WATER FLUID
3,320	2.0	460/60/3	4.2	5	3,203	HORIZONTAL FRONT TOP DISCHARGE	MEDIUM W/ACCESS	80.5/57.3	50.0/46.3	84.2	84.2	45	19.1	43% PROPYLENE GLYCOL

COOLING COIL QTY	COOLING COIL ROWS	FINS PER FT	FIN MATERIAL	TUBE MATERIAL	FLUID PD FT. OF WATER	APD IN. WATER	ACCESS SECTION	HEATING SECTION	HEATING EAT DB °F	HEATING LAT DB °F	TOTAL HEATING CAP MBh
1	8	161	ALUMINUM	COPPER	3.9	0.70	MEDIUM W/ACCESS	HOT WATER COIL	40.1	69.9	81.2

HEATING WATER ENT TEMP °F	HEATING WATER FLOW RATE GPM	HEATING WATER FLUID	HEATING COIL QTY	HEATING COIL ROWS	FINS PER FT	FIN MATERIAL	TUBE MATERIAL	FLUID PD FT. OF WATER	APD IN. WATER	FILTER SECTION
180	8.1	100% WATER	1	1	80	ALUMINUM	COPPER	0.72	0.06	COMB 30% PREFILTER 85% FINAL FILTER

INLET SECTION	ACCESSORIES	MANUFACTURER	MODEL NUMBER	WT. (LBS.)
MIXING BOX BACK RETURN SIDE OSA INLET HOOD	14-IN HIGH ROOF CURB	TRANE	PERFORMANCE CLIMATE CHANGER UNIT SIZE 6	1,767

HVA-5324

TOTAL VOL ACFM	SUPPLY ESP IN.H2O	V/HZ/PH	FAN BHP	FAN MOTOR HP	FAN RPM	FAN SECTION	COOLING SECTION	COOLING EAT DB/WB °F	COOLING LAT DB/WB °F	SENSIBLE COOLING CAP MBh	TOTAL COOLING CAP MBh	CHILLED WATER ENT TEMP °F	CHILLED WATER FLOW RATE GPM	CHILLED WATER FLUID
3,600	1.0	460/60/3	2.37	3.0	955	HORIZONTAL DISCHARGE	STANDARD	85.0/50.0	57.0/38.2	82.9	82.9	45	18.8	43% PROPYLENE GLYCOL

COOLING COIL QTY	FIN HEIGHT (IN)	FIN LENGTH (IN)	COOLING COIL ROWS	FINS PER FT	FIN MATERIAL	TUBE MATERIAL	FLUID PD FT. OF WATER	APD IN. WATER	HEATING SECTION	HEATING EAT DB °F	HEATING LAT DB °F	HEATING INPUT RATING BTU/HR	OUTPUT RATING BTU/HR
1	33.0	42.0	6	99	ALUMINUM	COPPER	1.18	0.17	FORCED-DRAFT NATURAL GAS	50.0	90.0	200,000	160,000

HEATING FUEL	HEAT EXCHANGER MATERIAL	FILTER SECTION	INLET SECTION	MANUFACTURER	MODEL NUMBER	WT. (LBS.)	ACCESSORIES
NATURAL GAS	409 SS	ANGLED 2" FILTER	BOTTOM RETURN	TRANE	GGAA20PFGD0N2KP3G300AFJQRV2 ARRANGEMENT K.	1,225	ELECTRONIC MODULATING CONTROL WITH THERMOSTAT, MAGNETIC STARTER, HIGH EFFICIENCY MOTOR, SUPPLY AIR FIRESTAT, CLOGGED FILTER SWITCH, HIGH/LOW GAS PRESSURE LIMIT SWITCHES, MANUAL RESET HIGH LIMIT SWITCH, HINGED SERVICE ACCESS DOORS.

CHARLES MOYERS NEW MEXICO 10830 LICENSED PROFESSIONAL ENGINEER
05-01-14

NO	DATE	CLASS REV	ADC	DESCRIPTION	DWN	DES	CHKD	SUB	APP

AECOM

RLWTF-UP LOW LEVEL WASTE SUBPROJECT

MECHANICAL EQUIPMENT LIST

BLDG. 230 TA-50

SUBMITTED MANNY TARIN

APPROVED FOR RELEASE ED ARTIGLIA

DRAWN V DAVISON

DESIGN B SHREEVE

CHECKED C MOYERS

DATE 5/8/14

Los Alamos NATIONAL LABORATORY PO Box 1663 Los Alamos, New Mexico 87545

CLASSIFICATION REVIEWER DATE

PROJECT ID 100761

DRAWING NO C55864

SHEET M-7000

301 OF 434

REV 0

25521

File Location: P:\RLWTF LOW-LEVEL WASTE FACILITY\500 CAD\C55864 MAIN BUILDING\SHEETS\13 MECHANICAL\55864-M-7000-R0.DWG
Plotted By: MOYERS, CHARLES Plot Date: Monday, May 05, 2014

MECHANICAL EQUIPMENT LIST (CONTINUED)

ITEM NO.	LOCATION ROOM NO.	NO. REQUIRED	DESCRIPTION, MANUFACTURER OR APPROVED EQUAL — ALL EQUIPMENT SIZED FOR OPERATION AT 7500 FT. ELEVATION	FURNISHED BY
4 FE-5309 5 FE-5310 6 FE-5323	GROUND LEVEL GROUND LEVEL SOUTH WALL	3	SYMBOL NO. 4, 5 & 6 EXHAUST FANS FE-5309, FE-5310 AND FE-5323.	SUBCONTRACTOR

UNIT NO.	CFM	SP (in. wg)	FAN RPM	OPERATING HP	MOTOR HP	NEW YORK BLOWER NO.	BARE FAN WEIGHT (LBS.)	V/HZ/PH
FE-5309	11,885	11.5	2,245	26.2	50	AF-30-275	1,160	460/60/3

COMMENT: CONFIGURATION: ARRANGEMENT 1, ROTATION CCW, DISCHARGE POSITION TAU. EVASE, STRUCTURAL BASE, FREE STANDING WITH 2" RESTRAINED SPRING ISOLATORS, VITON DOUBLE LIP SHAFT SEAL, EXTENDED LUBE LINES, PUNCHED INLET AND OUTLET FLANGES, BELT AND SHAFT GUARD, EVASE. MOTOR: POSITION W, TEFC ENCLOSURE, PREMIUM EFFICIENCY, LABELED FOR VFD

UNIT NO.	CFM	SP (in. wg)	FAN RPM	OPERATING HP	MOTOR HP	NEW YORK BLOWER NO.	BARE FAN WEIGHT (LBS.)	V/HZ/PH
FE-5310	11,885	11.5	2,245	26.2	50	AF-30-275	1,160	460/60/3

COMMENT: CONFIGURATION: ARRANGEMENT 1, ROTATION CW, DISCHARGE POSITION TAU. EVASE, STRUCTURAL BASE, FREE STANDING WITH 2" RESTRAINED SPRING ISOLATORS, VITON DOUBLE LIP SHAFT SEAL, EXTENDED LUBE LINES, PUNCHED INLET AND OUTLET FLANGES, BELT AND SHAFT GUARD, EVASE. MOTOR: POSITION Z, TEFC ENCLOSURE, PREMIUM EFFICIENCY, LABELED FOR VFD

UNIT NO.	CFM	SP (in. wg)	FAN RPM	OPERATING HP	MOTOR HP	GREENHECK NO.	WEIGHT (LBS.)	V/HZ/PH
FE-5323	1,045	1.0	1,726	0.31	1/3	CWB-121-3	60	115/60/1

COMMENT: SIDEWALL, NEMA 1 TOGGLE SWITCH, 12" ALUMINUM RUB RING, CSA LABELED MOTOR, HIGH EFFICIENCY MOTOR, SQUARE BACK DRAFT DAMPER, BIRD SCREEN.

7 CAV-5331 8 CAV-5332 9 CAV-5333 10 CAV-5334 11 CAV-5335 12 CAV-5336 13 CAV-5337 14 CAV-5338 15 CAV-5339	PROCESS AREA PROCESS AREA WET LAB CORRIDOR 1009 OPERATIONS CENTER ELEC ROOM MEN'S LAV LOBBY WOMEN'S LAV	9	SYMBOL NO. 7 THRU NO. 15 ; CAV-5331 THRU CAV-5339 SINGLE DUCT HOT WATER HEAT VARIABLE AIR VOLUME UNIT. MANUFACTURED BY TRANE, MODEL VCWF, 115/60/1, 50 VA.	SUBCONTRACTOR

VAV#	SIZE	WT (LBS.)	MAXIMUM CFM	MINIMUM CFM	AIR SIDE PD IN W.G.	SUPPLY WATER TEMP(°F)	WATER FLOWRATE (GPM)	ENTERING AIR TEMP(DB)(°F)	LEAVING AIR TEMP(DB)(°F)	HEATING CAPACITY IN MBh	COIL ROWS	WATER SIDE PD FT	CONTROL VALVE SIZE	CONTROL VALVE MAX CV	CONTROL VALVE BRAY MODEL NO.
CAV-5331	16	54	3,750	3,750	0.76	180	4.7	55.0	90.0	107.8	2	0.95	1/2"	2.6	ST 05-2-03
CAV-5332	16	54	3,750	3,750	0.76	180	4.7	55.0	90.0	107.8	2	0.95	1/2"	2.6	ST 05-2-03
CAV-5333	14	48	3,000	3,000	0.52	180	4.0	55.0	90.0	86.2	2	0.66	1/2"	2.6	ST 05-2-03
CAV-5334	8	24	470	470	0.10	180	1.0	55.0	90.0	13.5	1	2.22	1/2"	0.38	ST 05-2-04
CAV-5335	10	32	1,200	1,200	0.39	180	1.3	55.0	90.0	34.5	2	0.30	1/2"	0.68	ST 05-2-07
CAV-5336	8	24	650	650	0.30	180	0.9	55.0	90.0	18.7	2	0.08	1/2"	0.38	ST 05-2-04
CAV-5337	5	21	250	250	0.06	180	0.5	55.0	90.0	8.2	1	0.54	1/2"	0.38	ST 05-2-04
CAV-5338	10	32	920	920	0.25	180	0.9	55.0	90.0	26.4	2	0.15	1/2"	0.38	ST 05-2-04
CAV-5339	5	21	300	300	0.07	180	0.6	55.0	90.0	8.6	1	0.67	1/2"	0.38	ST 05-2-04

16 BDE-5341	VESTIBULE	1	SYMBOL NO. 16, BDE-5341, ELECTRICAL WALL HEATER	SUBCONTRACTOR

UNIT NO.	MANUFACTURER	MODEL	TYPE	V/PH/HZ	TOTAL AMPS	POWER (WATTS)	FINISH	ACCESSORIES
BDE-5341	INDEECO	932U02000C	WALL HEATER	208/1/60	10.0	2,000	WHITE	DISCONNECT SWITCH, TAMPERPROOF THERMOSTAT, SURFACE MOUNTING BOX 932-124500

17 CWR-5201 18 CWR-5202 19 CWR-5203	GROUND LEVEL GROUND LEVEL GROUND LEVEL	3	SYMBOL NO. 17 THRU NO. 19; AIR COOLED CHILLED WATER UNIT	SUBCONTRACTOR

NOMINAL TONS	CAPACITY TONS	ENTERING WATER TEMP °F	LEAVING WATER TEMP °F	REFRIG. TYPE	FLOWRATE GPM	FLUID TYPE 43% PROPYLENE GLYCOL	EVAP PRESS DROP FT.	AMBIENT AIR TEMP DEG. F	V/HZ/PH	M'N'MUM CIRCUIT AMPACITY	MAX OVER CURRENT PROTECTION	NUMBER OF CONDENSER FANS	MANUFACTURER	NUMBER	WT. (LBS.)
52	46.3	55	45	HFC-410A	98.6		17.0	95	460/60/3	118.7	125 AMPS	4	TRANE	CGAM052F2AZ2AXD, INCLUDE PUMP PACKAGE	4,506

20 BHW-5101 21 BHW-5102	LLW UTILITY BUILDING	2	SYMBOL NO. 20 & 21, BHW-5101, 5102, GAS FIRED BOILER, FORCED-DRAFT, HIGH ALTITUDE MODEL, LOW NOX	SUBCONTRACTOR

UNIT NO.	INPUT BTU/HR	OUTPUT BTU/HR	NG (CFH)	RETURN WATER TEMP(°F)	SUPPLY WATER TEMP(°F)	FLOW (GPM)	WATER SIDE PD FT	V/PH/HZ	AMPS	WT. (LBS.)	MANUFACTURER	MODEL NUMBER	NOTES
BHW-5101, 5102	900,000	765,000	900	160	190	51.0	1.0	115/1/60	3.5	2,564	BRYAN BOILERS	HE-AB90	NONE

NO	DATE	CLASS REV	ADC	DESCRIPTION	DWN	DES	CHKD	SUB	APP

AECOM

RLWTF-UP LOW LEVEL WASTE SUBPROJECT

MECHANICAL EQUIPMENT LIST

BLDG. 230 TA-50

DRAWN	V DAWSON
DESIGN	B SHREEVE
CHECKED	C MOYERS
DATE	5/8/14

SUBMITTED MANNY TARIN — APPROVED FOR RELEASE ED ARTIGLIA

Los Alamos NATIONAL LABORATORY, PO Box 1663, Los Alamos, New Mexico 87545

CLASSIFICATION — REVIEWER — DATE

PROJECT ID 100761 — DRAWING NO C55864 — REV 0

SHEET M-7001

302 OF 434

CHARLES MOYERS NEW MEXICO 18836 REGISTERED PROFESSIONAL ENGINEER

05-09-14

E3531 : 1

File Location: P:\RLWTF LOW-LEVEL WASTE FACILITY\300 CAD\C55864 MAIN BUILDING\SHEETS\15 MECHANICAL\55864-M-7001-R0.DWG
Plotted By: MOYERS, STEPHEN Plot Date: Monday, May 05, 2014

MECHANICAL EQUIPMENT LIST (CONTINUED)

ITEM NO.	LOCATION ROOM NO.	NO. REQUIRED	DESCRIPTION, MANUFACTURER OR APPROVED EQUAL — ALL EQUIPMENT SIZED FOR OPERATION AT 7500 FT. ELEVATION	FURNISHED BY
22 HXW-5204	LLW UTILITY BUILDING	1	SYMBOL NO. 22 HXW-5204 PROCESS CHILLED WATER HEAT EXCHANGER UNIT NO. / MANUFACTURER / MODEL / MODEL SIZE / LOAD (BTU/H) / NOMINAL SURFACE (FT^2) / DIMENSIONS (IN.) / NET WEIGHT (LB) HXW-5204 / APV / SR2 / M-10SER2/1 / 358,275 / 27.8 / 14WX38HX19L / 338 COLD SIDE 43% PROPYLENE GLYCOL ENTERING FLUID TEMP. °F / LEAVING FLUID TEMP. °F / FLUID FLOW RATE (GPM) / PRESSURE DROP (PSI) / CONNECTION 45.0 / 55.0 / 82.0 / 8.9 / ANSI CLASS 150 2" RF STUDDED HOT SIDE 100% WATER ENTERING FLUID TEMP. °F / LEAVING FLUID TEMP. °F / FLUID FLOW RATE (GPM) / PRESSURE DROP (PSI) / CONNECTION 70.0 / 60.0 / 75.0 / 6.2 / ANSI CLASS 150 2" RF STUDDED	SUBCONTRACTOR
23 ACR-5326 24 ACR-5327 25 ACR-5328	COMMUNICATION ROOM VACUUM PUMP ROOM	3	SYMBOL NO. 23, 24, & 25 ACR-5326, ACR-5327 AND ACR-5328. DUCTLESS SPLIT SYSTEM HEAT PUMP UNIT NO. / RATED COOLING CAP MBh / RATED HEATING CAP MBh / MCA INDOOR UNIT / V/PH/HZ / WT. (LBS.) / MANUFACTURER / INDOOR UNIT MODEL NO. / ACCESSORIES: LOW AMBIENT WIND BAFFLE, CONDENSATE PUMP, THREE POLE DISCONNECT SWITCH, LINE SET BALL VALVES WITH SCHRADER VALVE FOR REFRIGERANT SERVICE, TEMS-3 EQUIPMENT CURBS, 12"H X 4"W X 24"L THY-CURB. ACR-5326, ACR-5327 / 24.0 / 18.0 / 1.0 / 208/1/60 / 46 / MITSUBISHI / PKA-A24KA REFRIGERANT / MCA OUTDOOR UNIT / V/PH/HZ / WT. (LBS.) / MANUFACTURER / OUTDOOR UNIT MODEL NO. R410A / 18 / 208/1/60 / 165 / MITSUBISHI / PUZ-A24NHA UNIT NO. / RATED COOLING CAP MBh / RATED HEATING CAP MBh / MCA INDOOR UNIT / V/PH/HZ / WT. (LBS.) / MANUFACTURER / INDOOR UNIT MODEL NO. / ACCESSORIES: LOW AMBIENT WIND BAFFLE, CONDENSATE PUMP, THREE POLE DISCONNECT SWITCH, LINE SET BALL VALVES WITH SCHRADER VALVE FOR REFRIGERANT SERVICE, TEMS-3 EQUIPMENT CURBS, 12"H X 4"W X 24"L THY-CURB. ACR-5328 / 30.0 / 23.0 / 1.0 / 208/1/60 / 46 / MITSUBISHI / PKA-A30KA REFRIGERANT / MCA OUTDOOR UNIT / V/PH/HZ / WT. (LBS.) / MANUFACTURER / OUTDOOR UNIT MODEL NO. R410A / 25.0 / 208/1/60 / 165 / MITSUBISHI / PUZ-A30NHA	SUBCONTRACTOR
26 BDE-5342	FIRE RISER ROOM	1	SYMBOL NO. 26 BDE-5342. ELECTRIC WALL HEATER UNIT NO. / MANUFACTURER / MODEL / TYPE / V/PH/HZ / TOTAL AMPS / POWER (WATTS) / FINISH / ACCESSORIES BDE-5342 / INDEECO / 932U02000C / WALL HEATER / 208/1/60 / 10.0 / 2,000 / WHITE / DISCONNECT SWITCH, TAMPERPROOF THERMOSTAT, SURFACE MOUNTING BOX 932-124500	
27 PHW-5103	LLW TREATMENT BUILDING (ROOF TOP)	1	SYMBOL NO. 27 PHW-5103 BOOSTER IN-LINE CIRCULATING PUMP UNIT NO. / MANUFACTURER / MODEL / PUMP SIZE / EFF. / FLOW (GPM) / TOTAL HEAD (FT) / FLUID / SUCTION SIZE (IN) / IMPELLER DIAMETER (IN) / BHP / MOTOR HP / MOTOR RPM / V\HZ\PH / WT (LB) PHW-5103 / BELL & GOSSETT / SERIES 60 / 2X5-1/4 / 59.44 / 58.4 / 16 / 100% WATER / 2.0 / 4.125 / 0.40 / 0.75 / 1750 / 460\60\3 / 71	SUBCONTRACTOR
28 PHW-5105 29 PHW-5106	LLW UTILITY BUILDING	2	SYMBOL NO. 28 & 29, PHW-5105, 5106 HEATING WATER PUMP UNIT NO. / MANUFACTURER / PUMP SERIES / PUMP SIZE / EFF. / FLOW (GPM) / TOTAL HEAD (FT) / FLUID / IMPELLER DIAMETER (IN) / BRAKE HP (HP) / MOTOR HP (HP) / MOTOR RPM / V\HZ\PH / WT (LB) / ACCESSORIES: PHW-5105, 5106 / BELL & GOSSETT / 1510 / 1-1/4AC / 55.92 / 85.1 / 100 / 100% WATER / 5.25 / 3.84 / 5 / 3500 / 460\60\3 / 180 / DA-3 SUCTION DIFFUSER 3DS-3B TRIPLE DUTY VALVE	SUBCONTRACTOR
30 PHW-5110 31 PHW-5111	LLW UTILITY BUILDING	2	SYMBOL NO. 30 & 31, PHW-5110, PHW-5111 BOILER IN-LINE CIRCULATING PUMPS UNIT NO. / MANUFACTURER / MODEL / PUMP SIZE / EFF. / FLOW (GPM) / TOTAL HEAD (FT) / FLUID / SUCTION SIZE (IN) / IMPELLER DIAMETER (IN) / BHP / MOTOR HP / MOTOR RPM / V\HZ\PH / WT (LB) PHW-5110, 5111 / BELL & GOSSETT / SERIES 60 / 1-1/2x5-1/4 / 49.73 / 51 / 10 / 100% WATER / 1.5 / 3.875 / 0.26 / 0.33 / 1750 / 115\60\1 / 54	SUBCONTRACTOR
32 PCW-5211 33 PCW-5212	LLW UTILITY BUILDING	2	SYMBOL NO. 32 & 33, PCW-5211, 5212 CHILLED WATER PUMPS UNIT NO. / MANUFACTURER / PUMP SERIES / PUMP SIZE / EFF. / FLOW (GPM) / TOTAL HEAD (FT) / FLUID / IMPELLER DIAMETER (IN) / BRAKE HP / MOTOR HP / MOTOR RPM / V\HZ\PH / WT (LB) / ACCESSORIES: PCW-5211, 5212 / BELL & GOSSETT / 1510 / 2AC / 63.34 / 210 / 100 / 43% PROPYLENE GLYCOL 50 °F / 5.625 / 8.34 / 10 / 3500 / 460\60\3 / 290 / EC-3 SUCTION DIFFUSER 3DS-4B TRIPLE DUTY VALVE INVERTER DUTY MOTOR	SUBCONTRACTOR
34 PCW-5213 35 PCW-5214	LLW UTILITY BUILDING	2	SYMBOL NO. 34 & 35, PCW-5213, 5214 PROCESS COOLING WATER PUMPS UNIT NO. / MANUFACTURER / PUMP SERIES / PUMP SIZE / EFF. / FLOW (GPM) / TOTAL HEAD (FT) / FLUID / IMPELLER DIAMETER (IN) / BRAKE HP / MOTOR HP / MOTOR RPM / V\HZ\PH / WT (LB) / ACCESSORIES: PCW-5213, 5214 / BELL & GOSSETT / 1510 / 1-1/4BC / 56.80 / 75.0 / 90 / 100% WATER / 9.5 / 3.07 / 5 / 1750 / 460\60\3 / 205 / BA-3 SUCTION DIFFUSER 3DS-3B TRIPLE DUTY VALVE	SUBCONTRACTOR

NO	DATE	CLASS REV	ADC	DESCRIPTION	DWN	DES	CHKD	SUB	APP

AECOM

RLWTF-UP LOW LEVEL WASTE SUBPROJECT

MECHANICAL EQUIPMENT LIST

DRAWN V DAVISON
DESIGN B SHREEVE
CHECKED C MOYERS
DATE 5/8/14

BLDG. 230 TA-50

SUBMITTED MANNY TARIN — APPROVED FOR RELEASE ED ARTIGLIA

Los Alamos NATIONAL LABORATORY PO Box 1663 Los Alamos, New Mexico 87545

SHEET M-7002

303 OF 434

CLASSIFICATION REVIEWER DATE

PROJECT ID 100761 DRAWING NO C55864 REV 0

CHARLES MOYERS 15838 REGISTERED PROFESSIONAL ENGINEER STATE OF NEW MEXICO 05-08-14

Plotted By: THOMAS, DAMERON Plot Date: Wednesday, May 14, 2014
File Location: P:\RLWTF LOW-LEVEL WASTE FACILITY\500 CAD\C55864 MAIN BUILDING\SHEETS\15 MECHANICAL\530864-M-7002-R0.DWG

MECHANICAL EQUIPMENT LIST (CONTINUED)

ITEM NO.	LOCATION ROOM NO.	NO. REQUIRED	DESCRIPTION, MANUFACTURER OR APPROVED EQUAL — ALL EQUIPMENT SIZED FOR OPERATION AT 7500 FT. ELEVATION	FURNISHED BY
36 PHW-5313 37 PHW-5314	LLW TREATMENT BUILDING (ROOF TOP)	2	SYMBOL NO. 36 & 37, PHW-5313, 5314 HEAT RECOVERY SYSTEM PUMPS UNIT NO. / MANUFACTURER / PUMP SERIES / PUMP SIZE / EFF. / FLOW (GPM) / TOTAL HEAD (FT) / FLUID / IMPELLER DIAMETER (IN) / BRAKE HP / MOTOR HP / MOTOR RPM / V\HZ\PH / WT (LB) / ACCESSORIES: PHW-5313, 5314 BELL & GOSSETT 1510 1-1/2AC – 105 110 43% PROPYLENE GLYCOL 35 °F 5.5 5.83 10 3500 460\60\3 280 TEFC MOTOR, DB-3 SUCTION DIFFUSER, 3DS-3B TRIPLE DUTY VALVE	SUBCONTRACTOR
38 TX-5107	LLW UTILITY BUILDING	1	SYMBOL NO. 38, TX-5107 EXPANSION TANK HEATING WATER SYSTEM UNIT NO. / MANUFACTURER / MODEL NUMBER / TANK VOLUME (GAL) / ACCEPTANCE VOLUME (GAL) / TANK CHARGE (PSIG) TX-5107 AMTROL AX-80V 44.5 22.6 12	SUBCONTRACTOR
39 TX-5205	LLW UTILITY BUILDING	1	SYMBOL NO. 39, TX-5205 EXPANSION TANK CHILLED WATER SYSTEM UNIT NO. / MANUFACTURER / MODEL NUMBER / TANK VOLUME (GAL) / ACCEPTANCE VOLUME (GAL) / TANK CHARGE (PSIG) TX-5205 AMTROL AX-40V 21.7 11.3 12	SUBCONTRACTOR
40 TX-5208	LLW UTILITY BUILDING	1	SYMBOL NO. 40, TX-5208 EXPANSION TANK PROCESS COOLING WATER SYSTEM UNIT NO. / MANUFACTURER / MODEL NUMBER / TANK VOLUME (GAL) / ACCEPTANCE VOLUME (GAL) / TANK CHARGE (PSIG) TX-5208 AMTROL AX-40V 21.7 11.3 12	SUBCONTRACTOR
41 TX-5316	LLW TREATMENT BUILDING (ROOF TOP)	1	SYMBOL NO. 41, TX-5316 EXPANSION TANK HEAT RECOVERY SYSTEM UNIT NO. / MANUFACTURER / MODEL NUMBER / TANK VOLUME (GAL) / ACCEPTANCE VOLUME (GAL) / TANK CHARGE (PSIG) TX-5316 AMTROL AX-40V 21.7 11.3 12	SUBCONTRACTOR
42 TSA-5108	LLW UTILITY BUILDING	1	SYMBOL NO. 42, TSA-5108 AIR SEPARATOR, HEATING WATER SYSTEM UNIT NO. / MANUFACTURER / MODEL NUMBER / MAX. WORKING PRESSURE (PSI) / WT. (LBS.) / FLOW (GPM) / INLET/OUTLET DIAMETERS (IN) TSA-5108 AMTROL 3-AS-L 125 70 80.1 3	SUBCONTRACTOR
43 TSA-5206	LLW UTILITY BUILDING	1	SYMBOL NO. 43, TSA-5206 AIR SEPARATOR, CHILLED WATER SYSTEM UNIT NO. / MANUFACTURER / MODEL NUMBER / MAX. WORKING PRESSURE (PSI) / WT. (LBS.) / FLOW (GPM) / INLET/OUTLET DIAMETERS (IN) TSA-5206 AMTROL 4-AS-L 125 84 187.5 4	SUBCONTRACTOR
44 TSA-5209	LLW UTILITY BUILDING	1	SYMBOL NO. 44, TSA-5209 AIR SEPARATOR, PROCESS COOLING WATER SYSTEM UNIT NO. / MANUFACTURER / MODEL NUMBER / MAX. WORKING PRESSURE (PSI) / WT. (LBS.) / FLOW (GPM) / INLET/OUTLET DIAMETERS (IN) TSA-5209 AMTROL 2-1/2-AS-L 125 45 75 2 1/2	SUBCONTRACTOR
45 TSA-5315	LLW TREATMENT BUILDING (ROOF TOP)	1	SYMBOL NO. 45, TSA-5315 AIR SEPARATOR, HEAT RECOVERY SYSTEM MANUFACTURER / MODEL NUMBER / MAX. WORKING PRESSURE (PSI) / WT. (LBS.) / FLOW (GPM) / INLET/OUTLET DIAMETERS (IN) AMTROL 3-AS-L 125 75 90 3	SUBCONTRACTOR
46 TCI-5109 47 TCI-5207 48 TCI-5210	LLW UTILITY BUILDING	3	SYMBOL NO. 46, 47 & 48, TCI-5109, 5207, 5210 CHEMICAL BYPASS FEEDER UNIT NO. / MANUFACTURER / MODEL / ACCESSORIES / NOTES TCI-5109, 5207, 5210 GRISWOLD WATER SYSTEMS DB-5-GE-CS-A-250 INLET/OUTLET VALVE PACKAGES (VP-75) AND FUNNEL PACKAGE (FP-75) ASME CODE STANDARD	SUBCONTRACTOR
49 FAH-5311 50 FAH-5312	WET LAB	2	SYMBOL NO. 49 & 50, FAH-5311, 5312 FILTER TRAIN, SEE SPEC. # 23 3225 UNIT NO. / MANUFACTURER / TYPE FAH-5311, 5312 FLANDERS BAG-IN/BAG-OUT	SUBCONTRACTOR
51 BDE-5343	EFFLUENT SAMPLE BUILDING	1	SYMBOL NO. 26 BDE-5343, ELECTRIC WALL HEATER UNIT NO. / MANUFACTURER / MODEL / TYPE / V/PH/HZ / TOTAL AMPS / POWER (WATTS) / FINISH / ACCESSORIES BDE-5343 INDEECO 932U04000V WALL HEATER 230/1/60 17.0 4,000 WHITE DISCONNECT SWITCH, TAMPERPROOF THERMOSTAT, RECESSED MOUNTING BOX	SUBCONTRACTOR

NO	DATE	CLASS REV	ADC	DESCRIPTION	DWN	DES	CHKD	SUB	APP

AECOM

RLWTF-UP LOW LEVEL WASTE SUBPROJECT

MECHANICAL EQUIPMENT LIST

BLDG. 230 TA-50

DRAWN V DAVISON 9/8/14
DESIGN B SHRIEVE 9/8/14
CHECKED C MOYERS 9/8/14
DATE 9/8/14

SUBMITTED MANNY TARIN

APPROVED FOR RELEASE ED ARTIOLIA

Los Alamos NATIONAL LABORATORY PO Box 1663 Los Alamos, New Mexico 87545

SHEET M-7003
304 OF 434

CLASSIFICATION REVIEWER DATE

PROJECT ID 100761 DRAWING NO C55864 REV 0

CHARLES MOYERS 15838 NEW MEXICO REGISTERED PROFESSIONAL ENGINEER 05-09-14

File: Location: P:\RLWTF LOW-LEVEL WASTE FACILITY\300 CAD\C55864 MAIN BUILDING\SHEETS\15 MECHANICAL\55864-M-7003-R0.DWG
Plotted By: MOORE, STEPHEN Plot Date: Monday, May 05, 2014

12355

MECHANICAL EQUIPMENT LIST (CONTINUED)

ITEM NO.	LOCATION ROOM NO.	NO. REQUIRED	DESCRIPTION, MANUFACTURER OR APPROVED EQUAL — ALL EQUIPMENT SIZED FOR OPERATION AT 7500 FT. ELEVATION	FURNISHED BY
52 ACR-5329	EFFLUENT SAMPLE BUILDING	1	SYMBOL NO. 26 ACR-5329. DUCTLESS SPLIT SYSTEM AIR CONDITIONER	SUBCONTRACTOR

UNIT NO.	RATED COOLING CAP MBh	MCA INDOOR UNIT	V/PH/HZ	WT. (LBS.)	MANUFACTURER	INDOOR UNIT MODEL NO.	ACCESSORIES
ACR-5329	12.0	1.0	230/1/60	22	MITSUBISHI	MSY-GE12NA-8	LOW AMBIENT WIND BAFFLE, CONDENSATE PUMP, THREE POLE DISCONNECT SWITCH, LINE SET BALL VALVES WITH SCHRADER VALVE FOR REFRIGERANT SERVICE, LINE HIDE LINESET COVER SYSTEM.

REFRIGERANT	MCA OUTDOOR UNIT	V/PH/HZ	WT. (LBS.)	MANUFACTURER	OUTDOOR UNIT MODEL NO.
R410A	12.0	230/1/60	77	MITSUBISHI	MUY-GE12NA

54 HRC-5319	GROUND LEVEL	1	SYMBOL NO. 54, HRC-5319 HEAT RECOVERY COIL, EXHAUST SIDE	SUBCONTRACTOR

UNIT NO.	MANUFACTURER	MODEL	FLUID TYPE	FLOW (CFM)	FIN HEIGHT (IN)	FIN LENGTH (IN)	FINS PER FOOT	ROWS	FLOW (GPM)	FIN MATERIAL	TUBE MATERIAL	TUBE OD (IN)	CONNECTION LOCATION
HRC-5319	TEMTROL	4WC-10-50x 82x12-12AL	43% PROPYLENE GLYCOL	11,885	50	82	144	12	105	ALUMINUM	COPPER	1/2	RH

EAT DB °F (WINTER)	EAT WB °F (WINTER)	LAT DB °F (WINTER)	LAT WB °F (WINTER)	EWT °F (WINTER)	LWT °F (WINTER)	TOTAL CAPACITY (BTU/HR) (WINTER)	APD IN W.G.	FLUID PD (FT)	EAT DB °F (SUMMER)	LAT DB °F (SUMMER)	EWT °F (SUMMER)	LWT °F (SUMMER)	TOTAL CAPACITY (BTU/HR) (SUMMER)	APD IN W.G.	FLUID PD (FT)
72	55	39.2	39.2	34.9	43.0	387,174	0.92	28.02	75	82.5	82.6	81.1	72,377	0.67	25.28

55 FAH-5313 56 FAH-5314	PROCESS AREA	2	SYMBOL NO. 55 & 56, FAH-5313, 5314 FILTER TRAIN, SEE SPEC. # 23 3225	SUBCONTRACTOR

UNIT NO.	MANUFACTURER	TYPE
FAH-5313, 5314	FLANDERS	BAG-IN/BAG-OUT

57 HRC-5321	LLW TREATMENT BUILDING (ROOF TOP) HVA-5321	1	SYMBOL NO. 57, HRC-5321 HEAT RECOVERY COILS, SUPPLY SIDE	SUBCONTRACTOR

UNIT NO.	MANUFACTURER	MODEL	FLUID TYPE	FLOW (CFM)	FIN HEIGHT (IN)	FIN LENGTH (IN)	CASING THICKNESS (IN)	FINS PER FOOT	ROWS	FLOW (GPM)	FIN MATERIAL	TUBE MATERIAL	TUBE OD (IN)	CONNECTION LOCATION
HRC-5321	TEMTROL	4WC-10-52.5x 81x12-13AL	43% PROPYLENE GLYCOL	10,970	52.5	81	8	156	12	105	ALUMINUM	COPPER	1/2	LH

EAT DB °F (WINTER)	EAT WB °F (WINTER)	LAT DB °F (WINTER)	EWT °F (WINTER)	LWT °F (WINTER)	TOTAL CAPACITY (BTU/HR) (WINTER)	APD IN W.G.	FLUID PD (FT)	EAT DB °F (SUMMER)	LAT DB °F (SUMMER)	LAT WB °F (SUMMER)	EWT °F (SUMMER)	LWT °F (SUMMER)	TOTAL CAPACITY (BTU/HR) (SUMMER)	APD IN W.G.	FLUID PD (FT)
0	0	37.5	43.0	34.9	388,859	0.65	26.49	89	81.2	57.6	81.1	82.5	67,809	0.57	23.96

NOTE: COORDINATE CONNECTION LOCATION WITH HVA-5321

58 LV-5360 59 LV-5361	LLW UTILITY BUILDING	2	SYMBOL NO. 58 & 59, LV-5360, 5361 STATIONARY LOUVERS	SUBCONTRACTOR

UNIT NO.	WIDTH (IN)	HEIGHT (IN)	DEPTH (IN)	MINIMUM FREE AREA FT²	MANUFACTURER	MODEL	ACCESSORIES
LV-5360, 5361	48	72	6	10.3	RUSKIN	EME6625	1/2"X0.063 SQUARE MESH BIRD SCREEN, INSTALLATION CHANNEL FOR 8" BLOCK WALL

NO	DATE	CLASS REV	ADC	DESCRIPTION	DWN	DES	CHKD	SUB	APP

AECOM

RLWTF-UP LOW LEVEL WASTE SUBPROJECT

MECHANICAL EQUIPMENT LIST

DRAWN V DAVISON
DESIGN B SHREEVE
CHECKED C MOYERS
DATE 5/8/14

BLDG. 230 TA-50

SUBMITTED MANNY TARIN — APPROVED FOR RELEASE ED ARTIGLIA

Los Alamos NATIONAL LABORATORY PO Box 1663 Los Alamos, New Mexico 87545

SHEET M-7004
305 OF 434

CLASSIFICATION REVIEWER DATE

PROJECT ID 100761 DRAWING NO C55864 REV 0

CHARLES MOYERS NEW MEXICO 15538 REGISTERED PROFESSIONAL ENGINEER 05-01-14

95237 : 12356

File Location: P:\RLWTF LOW-LEVEL WASTE FACILITY\500 CAD\C55864 MAIN BUILDING\SHEETS\15 MECHANICAL\55864-M-7004-R0.DWG
Plotted By: MOORE, STEPHEN Plot Date: Monday, May 05, 2014

MECHANICAL EQUIPMENT LIST (CONTINUED)

ITEM NO.	LOCATION ROOM NO.	NO. REQUIRED	DESCRIPTION, MANUFACTURER OR APPROVED EQUAL	FURNISHED BY
60 MOD-5309A 61 MOD-5310A 62 MOD-5309B 63 MOD-5310B	OUTDOORS	4	SYMBOL NO. 60, 61, 62 AND 63 MOD-5309A, 5309B, 5310A, 5310B. MOTOR OPERATED ISOLATION DAMPERS	SUBCONTRACTOR

ALL EQUIPMENT SIZED FOR OPERATION AT 7500 FT. ELEVATION

UNIT NO.	DAMPER MANUFACTURER	MODEL NUMBER	SIZE	CONNECTION	PRESSURE DESIGN	PRESSURE LEAK TEST	LEAKAGE SEAT	LEAKAGE FRAME	CONTROL	FAIL POSITION
MOD-5309A	RUSKIN	BTR92	24"	FLANGED	NEG 30" W.G.	NEG 20" W.G.	NO LEAKAGE	NO LEAKAGE	TWO-POSITION BATTERY BACKUP	OPEN
MOD-5310A	RUSKIN	BTR92	24"	FLANGED	NEG 30" W.G.	NEG 20" W.G.	NO LEAKAGE	NO LEAKAGE	TWO-POSITION BATTERY BACKUP	OPEN
MOD-5309B	RUSKIN	BTO92	16 7/8"x41"	FLANGED	NEG 30" W.G.	NEG 20" W.G.	NO LEAKAGE	NO LEAKAGE	TWO-POSITION BATTERY BACKUP	OPEN
MOD-5310B	RUSKIN	BTO92	16 7/8"x41"	FLANGED	NEG 30" W.G.	NEG 20" W.G.	NO LEAKAGE	NO LEAKAGE	TWO-POSITION BATTERY BACKUP	OPEN

UNIT NO. CONTINUED	ACTUATOR MANUFACTURER	MODEL NUMBER	V/PH/HZ	POWER	ACCESSORIES
MOD-5309A	METSO	LADCW2500L3S2TN115AC	120/1/60	1.0 AMPS	FAIL SAFE BATTERY BACKUP, NEMA 4/4X ENCLOSURE, VALVE POSITION INDICATOR, 2 END SWITCHES, 2 LIMIT SWITCHES, HEATER
MOD-5310A	METSO	LADCW2500L3S2TN115AC	120/1/60	1.0 AMPS	FAIL SAFE BATTERY BACKUP, NEMA 4/4X ENCLOSURE, VALVE POSITION INDICATOR, 2 END SWITCHES, 2 LIMIT SWITCHES, HEATER
MOD-5309B	METSO	LADCW2500L3S2TN115AC	120/1/60	1.0 AMPS	FAIL SAFE BATTERY BACKUP, NEMA 4/4X ENCLOSURE, VALVE POSITION INDICATOR, 2 END SWITCHES, 2 LIMIT SWITCHES, HEATER
MOD-5310B	METSO	LADCW2500L3S2TN115AC	120/1/60	1.0 AMPS	FAIL SAFE BATTERY BACKUP, NEMA 4/4X ENCLOSURE, VALVE POSITION INDICATOR, 2 END SWITCHES, 2 LIMIT SWITCHES, HEATER

ITEM NO.	LOCATION ROOM NO.	NO. REQUIRED	DESCRIPTION, MANUFACTURER OR APPROVED EQUAL	FURNISHED BY
64 MOD-5313 65 MOD-5314	1011 1011	2	SYMBOL NO. 64 AND 65 MOD-5313, 5314. MOTOR OPERATED ISOLATION DAMPERS	SUBCONTRACTOR

UNIT NO.	DAMPER MANUFACTURER	MODEL NUMBER	SIZE	CONNECTION	PRESSURE DESIGN	CONTROL	FAIL POSITION
MOD-5313	A-T CONTROLS	V9-FS-300/WEA2-XXV90	3"	FLANGED	150 PSI	MODULATING	CLOSED
MOD-5314	A-T CONTROLS	V9-FS-150/WEA2-XXV90	1 1/2"	FLANGED	150 PSI	MODULATING	CLOSED

NO	DATE	CLASS REV	ADC	DESCRIPTION	DWN	DES	CHKD	SUB	APP

AECOM

RLWTF-UP LOW LEVEL WASTE SUBPROJECT

MECHANICAL EQUIPMENT LIST

BLDG. 230 TA-50

DRAWN	V DAVISON
DESIGN	B SHREEVE
CHECKED	C MOYERS
DATE	5/8/14

SUBMITTED MANNY TARIN

APPROVED FOR RELEASE ED ARTIOLIA

Los Alamos NATIONAL LABORATORY PO Box 1663 Los Alamos, New Mexico 87545

SHEET M-7005

306 OF 434

CLASSIFICATION | REVIEWER | DATE

PROJECT ID 100761 | DRAWING NO C55864 | REV 0

CHARLES MOYERS NEW MEXICO 15936 LICENSED PROFESSIONAL ENGINEER

05-08-14

File Location: P:_TECHNOLOGY\80239831 - RLWTF\400 STUDIES, DESIGN\480 DESIGN SUBMISSIONS\481 CONCEPT DESIGN\DEL DL_5-8-14 FINAL\DEL DI DRAWINGS\230-LLW TREATMENT BUILDING\BLDG 230 CAD FILES\230-MECHANICAL\55864-M-7005-R0.DWG
Plotted By: BROWN, DARLING Plot Date: Wednesday, May 28, 2014

: 12357

MECHANICAL EQUIPMENT LIST (CONTINUED)

ITEM NO.	LOCATION ROOM NO.	NO. REQUIRED	DESCRIPTION, MANUFACTURER OR APPROVED EQUAL — ALL EQUIPMENT SIZED FOR OPERATION AT 7500 FT. ELEVATION	FURNISHED BY
			ITEM / MANUFACTURER / PART NUMBER / REMARKS	SUBCONTRACTOR
A	CEILING	4	SUPPLY DIFFUSER, PERFORATED FACE, 4-WAY, LAY-IN, SURFACE MOUNT / NAILOR / 4320CB / CEILING MODULE AND NECK SIZES ON DWGS	
B	CEILING	5	SUPPLY DIFFUSER, PERFORATED FACE, 4-WAY, SURFACE MOUNT / NAILOR / 4320CB / CEILING MODULE AND NECK SIZES ON DWGS	
C	DUCT	14	SUPPLY DIFFUSER, 24"X24" STAMPED SQUARE CEILING DIFFUSER DUCT MOUNT / NAILOR / RNS / THROW AND NECK SIZE ON DWGS	
D	CEILING	4	RETURN AIR DIFFUSER, PERFORATED FACE, LAY-IN, SURFACE MOUNT / NAILOR / 4360 / CEILING MODULE AND NECK SIZES ON DWGS	
E	CEILING	1	RETURN AIR DIFFUSER, PERFORATED FACE, SURFACE MOUNT / NAILOR / 4360 / CEILING MODULE AND NECK SIZES ON DWGS	
F	–	–	NOT USED / – / – / –	
G	DUCT	10	EXHAUST GRILLE STAINLESS STEEL, 1/2" HORIZONTAL BLADE SPACING DUCT MOUNT / NAILOR / 6755H / SIZES ON DWGS	
H	CEILING	7	EXHAUST DIFFUSER, PERFORATED FACE, SURFACE MOUNT / NAILOR / 4360 / CEILING MODULE AND NECK SIZES ON DWGS	
I	CEILING	7	SUPPLY DIFFUSER, STAINLESS STEEL, 2-WAY, LAY-IN, SURFACE MOUNT / TITUS / TRITEC-SS / NECK SIZES ON DWGS	
J	CEILING	1	EXHAUST GRILLE STAINLESS STEEL, 1/2" HORIZONTAL BLADE SPACING CEILING MOUNT / NAILOR / 6755H / SIZES ON DWGS	
64	LLW UTILITY BUILDING	1	DRAIN PUMP (105) — MANUFACTURER: ZOELLER PUMP CO.; BASIN MODEL: 013017; PUMP MODEL: 007917; ALARM MODEL: N/A; CHECK VALVE MODEL: 30-0181; RAIL & DISCHARGE MODEL: N/A; ELECTRICAL: 115V/I PH/1/3HP	SUBCONTRACTOR
65, 66	CONTROLLER AND VACUUM PUMP ENCLOSURE	2	VACUUM PUMPS PV-5905, PV-5906 — MANUFACTURER: SUTORBILT; PUMP MODEL: 2MP-GAA-MDPA; RPM: 1725; REMARKS: LEESON ELECTRIC MOTOR # A6C17CR1C	SUBCONTRACTOR
67	STACK	1	FILTER FAH-5901 — MANUFACTURER: ENVIROMENTAL; HOUSING: 1LPH-20; SAMPLE MEDIA: TO BE FURNISHED BY LANL	SUBCONTRACTOR

NO	DATE	CLASS REV	ADC	DESCRIPTION	DWN	DES	CHKD	SUB	APP

AECOM

RLWTF-UP LOW LEVEL WASTE SUBPROJECT

MECHANICAL EQUIPMENT LIST

BLDG. 230 TA-50

DRAWN	V DAVISON
DESIGN	B SHREEVE
CHECKED	C MOYERS
DATE	5/6/14

SUBMITTED: MANNY TARIN

APPROVED FOR RELEASE: ED ARTIGLIA

Los Alamos NATIONAL LABORATORY — PO Box 1663, Los Alamos, New Mexico 87545

SHEET M-7006

307 OF 434

CLASSIFICATION | REVIEWER | DATE

PROJECT ID 100761 | DRAWING NO C55864 | REV 0

CHARLES MOYERS, NEW MEXICO 16838, LICENSED PROFESSIONAL ENGINEER — 05-08-14

File Location: P:\RLWTF LOW-LEVEL WASTE FACILITY\500 CAD\C55864 MAIN BUILDING\SHEETS\15 MECHANICAL\55864-M-7006-R0.DWG
Plotted By: MOORE, STEPHEN Plot Date: Monday, May 05, 2014

12358

ELECTRICAL SYMBOL LEGEND

(ALL SYMBOLS SHOWN ARE NOT NECESSARILY USED ON THE DRAWINGS)

ELECTRICAL SYMBOLS

SYMBOL	DESCRIPTION
	EXISTING CONSTRUCTION
	EXISTING TO BE REMOVED
	FUTURE CONSTRUCTION
	NEW CONSTRUCTION
	ELECTRICAL SIGNAL/UG CONDUIT
	NETWORKING DATA LINK
	HOMERUN CONDUIT
	GROUND
	PHASE
	SWITCHED
	NEUTRAL
	INSTRUMENT GROUND
	FLEXIBLE CONDUIT
C	CONDUIT DOWN
C	CONDUIT UP
	CONDUIT SEAL
E	CONDUIT CAP
480V 500A	BUSWAY WITH DESCRIPTION
G	GROUNDING CONDUCTOR
	CABLE TRAY
J	CEILING MOUNTED JUNCTION BOX
J HJ	WALL MOUNTED JUNCTION BOX
	DUPLEX RECEPTACLE OUTLET
	SINGLE RECEPTACLE OUTLET
	DOUBLE DUPLEX RECEPTACLE
GFCI WP	GROUND FAULT CIRCUIT INTERRUPTER DUPLEX OUTLET WITH WEATHERPROOF COVER
*	SPECIAL PURPOSE OUTLET – USE SUBSCRIPT TO IDENTIFY TYPE IN SPECS
*	FLOOR RECEPTACLE OUTLET – USE SUBSCRIPT TO IDENTIFY TYPE IN SPECS
	RECEPTACLE RACEWAY
* = o	SINGLE POLE SWITCH – CONTROLS FIXTURES INDICATED
* = 2	DOUBLE POLE SWITCH
* = 3	THREE-WAY SWITCH
* = 4	FOUR-WAY SWITCH
* = WP	WEATHERPROOF SWITCH
* = K	KEY OPERATED SWITCH
* = T	MOTOR RATED SWITCH, WITH THERMAL OVERLOAD PROTECTION
LC	LIGHTING CONTROLLER
600	DIMMER SWITCH – NUMBER INDICATES WATTAGE
M	OCCUPANCY SENSING SWITCH –WALL MOUNT
M	OCCUPANCY SENSOR–CEILING MOUNT
P	PHOTOCELL
6 30	REMOTE CONTROL SWITCH 6 POLE, 30 AMPS
A 1, a	FLUORESCENT LUMINAIRE A = FIXTURE TYPE 1 = CIRCUIT NUMBER a = SWITCH CONTROLLING FIXTURE
A 1, a	WALL MOUNTED FLUORESCENT LUMINAIRE A = FIXTURE TYPE 1 = CIRCUIT NUMBER a = SWITCH CONTROLLING FIXTURE

SYMBOL	DESCRIPTION
A 1, a	CEILING MOUNTED LUMINAIRE A = FIXTURE TYPE 1 = CIRCUIT NUMBER a = SWITCH CONTROLLING FIXTURE
A 1, a	WALL MOUNTED LUMINAIRE A = FIXTURE TYPE 1 = CIRCUIT NUMBER a = SWITCH CONTROLLING FIXTURE
1, a	EMERGENCY LUMINAIRE A = FIXTURE TYPE W/ "EL" 1 = CIRCUIT NUMBER a = SWITCH CONTROLLING FIXTURE
A	LIGHT POLE WITH LUMINAIRE A = FIXTURE TYPE
A A	EMERGENCY LIGHTING UNIT RECHARGEABLE TYPE A = FIXTURE TYPE
A 1	CEILING MOUNTED EXIT SIGN – ARROW AS INDICATED A = FIXTURE TYPE 1 = CIRCUIT NUMBER
A 1	TWO FACED EXIT SIGN A = FIXTURE TYPE 1 = CIRCUIT NUMBER
A 1	WALL MOUNTED EXIT SIGN A = FIXTURE TYPE 1 = CIRCUIT NUMBER
	SWITCHGEAR, POWER PANELBOARD LIGHTING PANELBOARD
	CLEAR SPACE (WORKING CLEARANCE OR FUTURE)
T	TRANSFORMER
40A 60A F	FUSIBLE DISCONNECT 40A – INDICATES FUSE SIZE 60A – INDICATES SWITCH SIZE
20 J	NON–FUSIBLE DISCONNECT SWITCH – NUMBER INDICATES SWITCH SIZE
2 J 20	COMBINATION MAGNETIC STARTER AND CIRCUIT BREAKER 2 – INDICATES NEMA STARTER SIZE 20 – INDICATES CIRCUIT BREAKER TRIP
2	MAGNETIC STARTER – NUMBER INDICATES NEMA STARTER SIZE
SS 3	SOFT STARTER – NUMBER INDICATES NEMA STARTER SIZE
ASD	ADJUSTABLE SPEED DRIVE
PB	PULL BOX
	T–TELEPHONE RACEWAY F–FIRE ALARM RACEWAY FO–FIBER OPTIC RACEWAY C–CONTROL RACEWAY E–ELECTRICAL RACEWAY
1	KEYED NOTE DESIGNATION
1	ELECTRICAL EQUIPMENT DESIGNATION
1	MECHANICAL EQUIPMENT DESIGNATION
1	NAMEPLATE DESIGNATION
1	PART BUBBLE
XX	LIGHTNING PROTECTION SYSTEM AIR TERMINAL XX = LENGTH IN INCHES
•	CONNECTION POINT (NS)
■	EXOTHERMIC BOND OR COMPRESSION FITTING CONNECTIONS (NS)

SYMBOL	DESCRIPTION
LP–xx	PANELBOARD WITH MAIN CIRCUIT BREAKER
100 LP–xx	PANELBOARD WITH MAIN LUGS 100 INDICATES PANEL SIZE
100/3	MEDIUM VOLTAGE DISCONNECT SWITCH
600	MEDIUM VOLTAGE DRAWOUT CIRCUIT BREAKER
1000 1200	DRAWOUT CIRCUIT BREAKER (TRIP/FRAME)
7 MCP	MOTOR CIRCUIT PROTECTOR
300 400	CIRCUIT BREAKER (TRIP/FRAME)
480 Δ 208Y/ 120 500 KVA	TRANSFORMER – DELTA–WYE CONNECTION
	SURGE PROTECTION (MOV)
3000/5 3	CURRENT TRANSFORMER – NUMBERS INDICATE RATIO AND QUANTITY
3	POTENTIAL TRANSFORMER – NUMBER INDICATES QUANTITY
5A	FUSE
A5	FUSIBLE ELEMENT
A5	FUSIBLE DISCONNECT SWITCH
	GROUND
100 C	CIRCUIT BREAKER BUSWAY PLUG (NUMBER INDICATES C/B TRIP)
N S E L	AUTOMATIC TRANSFER SWITCH
R1	RELAY #1
CR	CONTROL RELAY (NS)
12,700	AVAILABLE 3 PHASE FAULT CURRENT (RMS SYM–AMPS)
	BUS PLUG CIRCUIT BREAKER
	PLUG–IN CONNECTOR
	NORMALLY CLOSED CONTACT
	REMOTE NORMALLY CLOSED CONTACT (NS)
	NORMALLY OPEN CONTACT
	REMOTE NORMALLY OPEN CONTACT (NS)
	PROTECTIVE RELAY, SOLENOID COIL
	OVERLOAD RELAY
	CONNECTION
	CONNECTION

SYMBOL	DESCRIPTION
5	MOTOR (NUMBER INDICATES HP)
XX	LOAD (GROUP OR NON MOTOR)
SCR	SILICON CONTROLLED RECTIFIER–BASED CONTROLLER
CAM J2	CONTINUOUS AIR MONITOR J2 IDENTIFICATION NUMBER
FAS J2	FIXED AIR SAMPLER J2 IDENTIFICATION NUMBER

INSTRUMENT/FUNCTION SYMBOLS

	PRIMARY LOCATION NORMALLY ACCESSIBLE TO OPERATOR
DISCRETE INSTRUMENTS	J1 / J2
SHARED DISPLAY, SHARED CONTROL	J1 / J2

ABBREVIATIONS

(ALL ABBREVIATIONS SHOWN ARE NOT NECESSARILY USED ON THE DRAWINGS)

A	AMPS
AL	ALUMINUM
AFF	ABOVE FINISHED FLOOR
AGL	ABOVE GRADE LEVEL
BAS	BUILDING AUTOMATION SYSTEM
C	CONDUIT
CAB	CABINET
CAM	CONTINUOUS AIR MONITOR
CAV	CONSTANT AIR VOLUME VALVE
CU	COPPER
DS	DISCONNECT SWITCH
E	ELECTRICAL
ES	EMERGENCY STOP
EWS	ENGINEERING WORKSTATION
EXST	EXISTING
FAS	FIXED AIR SAMPLER
FCS	FACILITY CONTROL SYSTEM
FO	FIBEROPTIC
FP	FIRE PROTECTION
FSD	FIRE SMOKE DAMPER
GND	GROUND
GFI	GROUND FAULT INTERRUPTER
HVAC	HEATING VENTILATING AND AIR CONDITIONING
HWR	HOT WATER RETURN
HWS	HOT WATER SUPPLY
IJB	INSTRUMENT JUNCTION BOX

ABBREVIATIONS (CONTINUED)

KCMIL	THOUSAND CIRCULAR MIL
KV	KILOVOLTS
KVA	KILOVOLT–AMPS
KW	KILOWATTS
LP	LIGHTING PANEL
MCC	MOTOR CONTROL CENTER
MCS	MOTOR COMBINATION STARTER
MOV	METAL OXIDE VARISTER
MR	MULTI RATIO
MV	MEDIUM VOLTAGE
NS	NOT STANDARD
OWS	OPERATOR WORK STATION
PJB	POWER JUNCTION BOX
PP	POWER PANEL
RLWTF	RADIOACTIVE LIQUID WASTE TREATMENT FACILITY
SPD	SURGE PROTECTION DEVICE
SS	SOFT START
SWBD	SWITCHBOARD
SWGR	SWITCHGEAR
T	TELECOMMUNICATION
THK	THICK
TR	DRY TYPE TRANSFORMER
UG	UNDERGROUND
UL	UNDERWRITERS LABORATORIES
V	VOLTS
WP	WEATHERPROOF
XFMR	TRANSFORMER

NO	DATE	CLASS REV	ADC	DESCRIPTION	DWN	DES	CHKD	SUB	APP

AECOM

RLWTF–UP LOW LEVEL WASTE SUBPROJECT

SYMBOL LEGEND AND ABBREVIATIONS

DRAWN	V DAVISON
DESIGN	S MOORE
CHECKED	G MOE
DATE	5/8/14

BLDG. 230 TA–50

SUBMITTED MANNY TARIN — APPROVED FOR RELEASE ED ARTIGLIA

Los Alamos NATIONAL LABORATORY — PO Box 1663, Los Alamos, New Mexico 87545

SHEET E–0001

308 OF 434

CLASSIFICATION — REVIEWER — DATE

PROJECT ID 100761 — DRAWING NO C55864 — REV 0

EUGENE DAVID MOE, NEW MEXICO, 21369, PROFESSIONAL ENGINEER, digitally signed

Plot Location: P:\RLWTF LOW-LEVEL WASTE FACILITY\000 CAD\C55864 MAIN BUILDING\SHEET\E1518 ELECTRICAL\C55864-E-0001.MS.DWG
Plotted By: MOORE, STEPHEN Plot Date: Monday, May 05, 2014

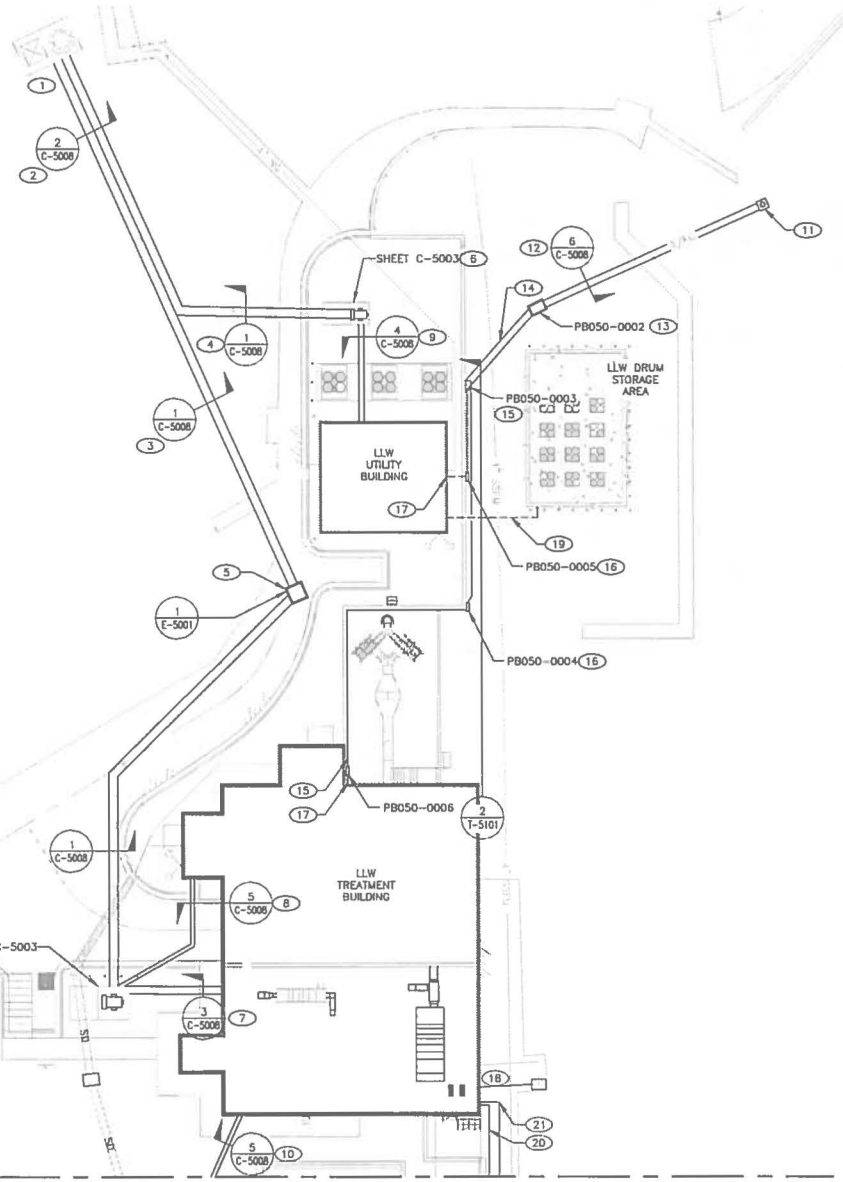

COMBINED ELECTRICAL UTILITIES PLAN – NORTH

1/16"=1'-0"

GENERAL NOTES

1. IF THIS SHEET IS NOT 24"X36", THEN IT IS A REDUCED SIZE PLOT. USE THE GRAPHIC SCALE ACCORDINGLY.
2. ALL DUCT BANKS 24" MINIMUM FILL TO TOP OF DUCT BANK.

KEYED NOTES

(1) PAD MOUNTED SWITCH, 600A, 25 KV, 4 WAY GFE BY LANL MAINTENANCE AND SITE SERVICES. VERIFY LOCATION WITH UTILITIES. EXISTING MANHOLE MH50-109.

(2) DUCT BANKS DB1A AND DB1B, 2 x 2, CONCRETE ENCASED. MV FEEDER TO UTILITY TRANSFORMERS (XFMR-A AND XFMR-B).

(3) DUCT BANK DB1A, 2 x 1, CONCRETE ENCASED. MV FEEDER TO UTILITY TRANSFORMER XFMR-A.

(4) DUCT BANK DB1B, 2 x 1, CONCRETE ENCASED. MV FEEDER TO UTILITY TRANSFORMER XFMR-B.

(5) ELECTRICAL MANHOLE.

(6) TRANSFORMERS (XFMR-A AND XFMR-B) WITH CONCRETE PAD.

(7) DUCT BANK DB4, 3 x 2, CONCRETE ENCASED. LV SERVICE TO LLW BUILDING.

(8) DUCT BANK DB6, 2 x 1, 3" CONDUIT CONCRETE ENCASED. FOR FUTURE SERVICE.

(9) DUCT BANK DB5, 2 x 2, CONCRETE ENCASED. LV SERVICE TO LLW UTILITY BUILDING.

(10) DUCT BANK DB8, 2 x 1, 2" CONDUIT CONCRETE ENCASED LV FEEDER TO EFFLUENT SAMPLE BUILDING. SEE DRAWING C55867 SHEET E-1400.

(11) EXISTING TELEPHONE MANHOLE PB 50-0266.

(12) DUCT BANK, 3 x 1, 4" CONDUIT CONCRETE ENCASED FOR COMMUNICATIONS.

(13) TELECOM HAND HOLE, SEE DETAIL 3 ON SHEET E-5001.

(14) DIRECT BURIED (3) 4" CONDUITS FOR COMMUNICATIONS.

(15) COMMUNICATIONS PULL BOX MOUNTED TO RETAINING WALL.

(16) CONDUIT BODIES MOUNTED TO RETAINING WALL. 90 DEGREE ELBOW COMMUNICATIONS PULL POINTS.

(17) TRANSITION TO DIRECT BURIED COMMUNICATIONS ENTRANCE CONDUIT.

(18) INSTALL 3/4" CONDUIT TO EXISTING PULL BOX. PULL BOX CONTAINS EXISTING SPARE 2" CONDUIT TO INFLUENT STORAGE FACILITY FOR FCS FIBER OPTICS.

(19) UNDERGROUND CONDUIT FOR GENERAL PURPOSE RECEPTACLES AT LLW DRUM STORAGE AREA BLDG 252. SEE SHEET E-1004.

(20) UNDERGROUND CONDUIT FOR SANITARY SEWER LIFT STATION BRANCH CIRCUIT.

(21) UNDERGROUND CONDUIT FOR LIFT STATION PHONE LINE AND FCS ALARMS.

NO	DATE	CLASS REV	ADC	DESCRIPTION	DWN	DES	CHKD	SUB	APP

AECOM

RLWTF-UP LOW LEVEL WASTE SUBPROJECT

COMBINED ELECTRICAL UTILITIES SITE PLAN – NORTH

BLDG. 230 TA-50

DRAWN	V DAVISON
DESIGN	S MOORE
CHECKED	D MOE
DATE	5/8/14

SUBMITTED MANNY TARIN

APPROVED FOR RELEASE ED ARTIGLIA

Los Alamos NATIONAL LABORATORY PO Box 1663 Los Alamos, New Mexico 87545

SHEET E-1000

309 OF 434

CLASSIFICATION | REVIEWER | DATE

PROJECT ID 100761 | DRAWING NO C55864 | REV 0

EUGENE DAVID MOE NEW MEXICO 21389 PROFESSIONAL ENGINEER

File Location: P:\RLWTF LOW-LEVEL WASTE FACILITY\300 CAD\C55864 MAIN BUILDING\SHEETS\16 ELECTRICAL\55864-E-1000-R0.DWG
Plotted By: MOORE, STEPHEN Plot Date: Monday, May 05, 2014

C55864

MATCH LINE
SEE SHEET
E-1000

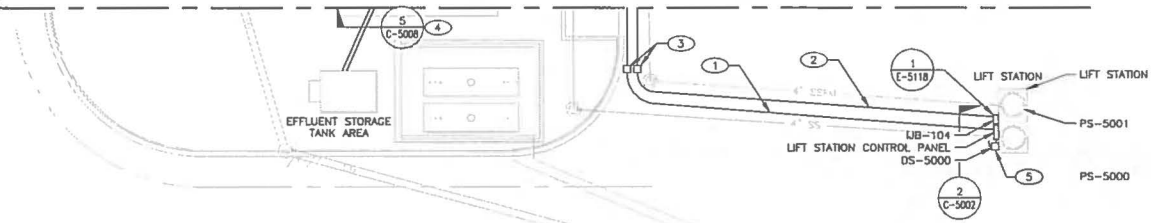

COMBINED ELECTRICAL UTILITIES PLAN – SOUTH

1/16"=1'-0"

GENERAL NOTES

1. IF THIS SHEET IS NOT 24"X36", THEN IT IS A REDUCED SIZE PLOT. USE THE GRAPHIC SCALE ACCORDINGLY.
2. ALL DUCT BANKS 24" MINIMUM FILL TO TOP OF DUCT BANK.

KEYED NOTES

(1) DIRECT BURIED (2) 1" CONDUITS FOR LIFT STATION BRANCH CIRCUIT (1 SPARE).

(2) DIRECT BURIED 1" CONDUIT FOR LIFT STATION PHONE LINE AND 1 1/2" CONDUIT FOR FCS ALARMS.

(3) PULL BOX, H-20 RATED.

(4) DUCT BANK DBB, 2 x 1, 2" CONDUIT CONCRETE ENCASED LV FEEDER TO EFFLUENT SAMPLE BUILDING. SEE DRAWING C55867 SHEET E-1400.

(5) COORDINATE WITH LANL TO PROVIDE TEMPORARY POWER TO LIFT STATION DURING CONSTRUCTION.

NO	DATE	CLASS REV	ADC	DESCRIPTION	DWN	DES	CHKD	SUB	APP

AECOM

RLWTF-UP LOW LEVEL WASTE SUBPROJECT

COMBINED ELECTRICAL UTILITIES SITE PLAN – SOUTH

BLDG. 230 TA-50

DRAWN	V DAVISON
DESIGN	S MOORE
CHECKED	G MOE
DATE	5/8/14

SUBMITTED
MANNY TARIN

APPROVED FOR RELEASE
ED ARTIGLIA

Los Alamos NATIONAL LABORATORY
PO Box 1663 Los Alamos, New Mexico 87545

SHEET E-1001
310 OF 434

CLASSIFICATION | REVIEWER | DATE

PROJECT ID	DRAWING NO	REV
100761	C55864	0

EUGENE DAVID MOE 21369 NEW MEXICO PROFESSIONAL ENGINEER 5/8/14

T9821

File Location: P:\RLWTF LOW-LEVEL WASTE FACILITY\500 CAD\C55864 MAIN BUILDING\SHEETS\18 ELECTRICAL\55864-E-1001-R0.DWG
Plotted By: MOORE, STEPHEN Plot Date: Monday, May 05, 2014

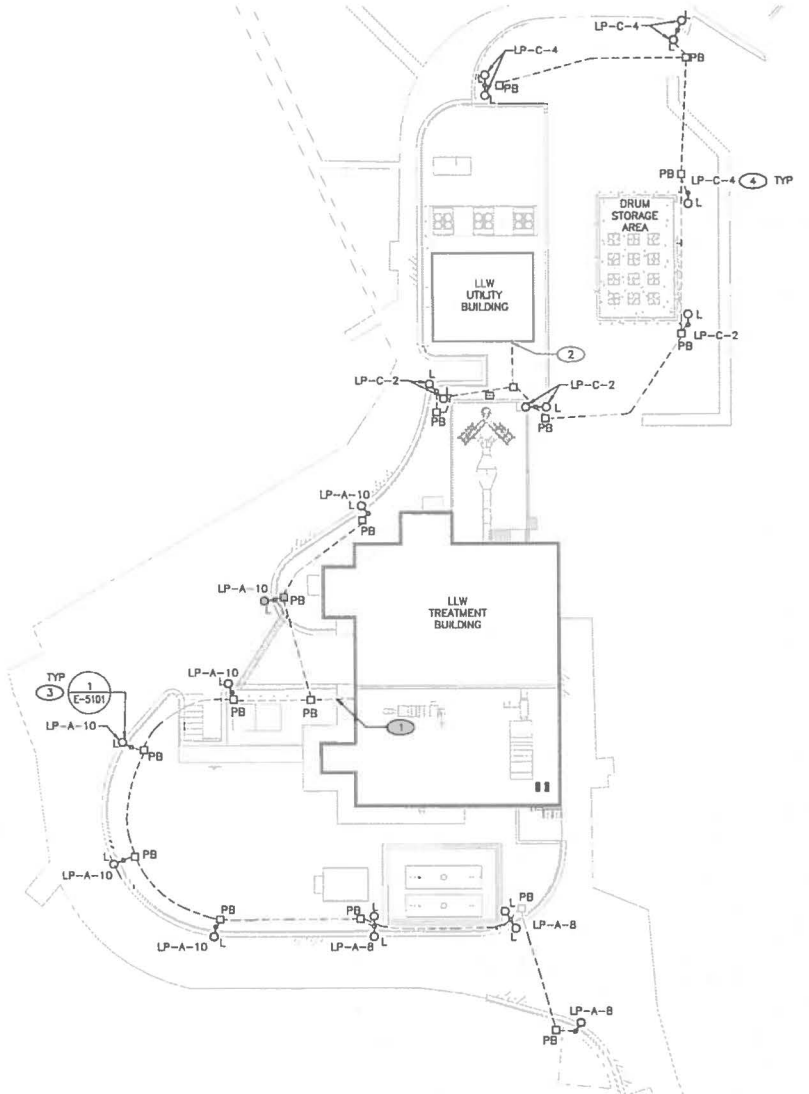

EXTERIOR LIGHTING PLAN

1"=20'-0"

GENERAL NOTES

1. IF THIS SHEET IS NOT 24"X36", THEN IT IS A REDUCED SIZE PLOT. USE THE GRAPHIC SCALE ACCORDINGLY
2. SEE SHEET E-0001 FOR LIGHTING SYMBOLS. INSTALL ALL EQUIPMENT PER MANUFACTURER SPECIFICATIONS.
3. SEE SHEET E-7103 FOR LUMINAIRE AND LIGHTING SCHEDULES.
4. COORDINATE LOCATION OF POLES WITH OTHER UTILITIES.
5. INSTALL ONE (1) 3/4" CONDUIT FOR EACH OUTDOOR LIGHTING CIRCUIT. WHERE MULTIPLE PARALLEL RUNS OF CONDUIT ARE INTENDED, A SINGLE DASHED LINE IS SHOWN FOR CLARITY.
6. COORDINATE THE INSTALLATION OF LIGHT POLES AND ASSOCIATED UNDERGROUND CONDUIT WITH UNDERGROUND UTILITIES (SHEETS C-1009 TO C-1015), CONCRETE PADS, AND OTHER ELECTRICAL CONDUIT AND EQUIPMENT. CONDUIT IS SHOWN DIAGRAMMATICALLY AND MAY BE FIELD ROUTED TO SUIT FIELD CONDITIONS.

KEYED NOTES

(1) 1" UNDERGROUND CONDUIT TO LIGHTING CONTROL PANEL LC-A LOCATED IN LLW TREATMENT BUILDING ROOM 1014. SEE SHEETS E-1110 AND E-4100.

(2) 1" UNDERGROUND CONDUIT TO LIGHTING CONTROL PANEL LC-C LOCATED IN LLW UTILITY BUILDING. SEE DRAWING C55865 SHEET E-1200 AND SHEET E-1204.

(3) ALL LIGHT POLES SHALL BE GROUNDED. SEE E-5101 FOR MOUNTING AND GROUNDING DETAILS.

(4) LIGHTING CIRCUITS SHOWN ARE CONTROLLED FROM LIGHTING CONTACTOR PANEL.

NO	DATE	CLASS REV	ADC	DESCRIPTION	DWN	DES	CHKD	SUB	APP

AECOM

RLWTF-UP LOW LEVEL WASTE SUBPROJECT

EXTERIOR LIGHTING PLAN

BLDG. 230 TA-50

DRAWN	V DAVISON
DESIGN	S MOORE
CHECKED	D MOE
DATE	5/8/14

SUBMITTED MANNY TARIN

APPROVED FOR RELEASE ED ARTIGLIA

Los Alamos NATIONAL LABORATORY PO Box 1663 Los Alamos, New Mexico 87545

SHEET E-1002

311 OF 434

CLASSIFICATION | REVIEWER | DATE

PROJECT ID	DRAWING NO	REV
100761	C55864	0

EUGENE DAVID MOE NEW MEXICO 21389 PROFESSIONAL ENGINEER

29321 :

File Location: P:\RLWTF LOW-LEVEL WASTE FACILITY\300 CAD\C55864 MAIN BUILDING\SHEETS\10 ELECTRICAL\55864-E-1002-R0.DWG
Plotted By: MOORE, STEPHEN Plot Date: Monday, May 05, 2014

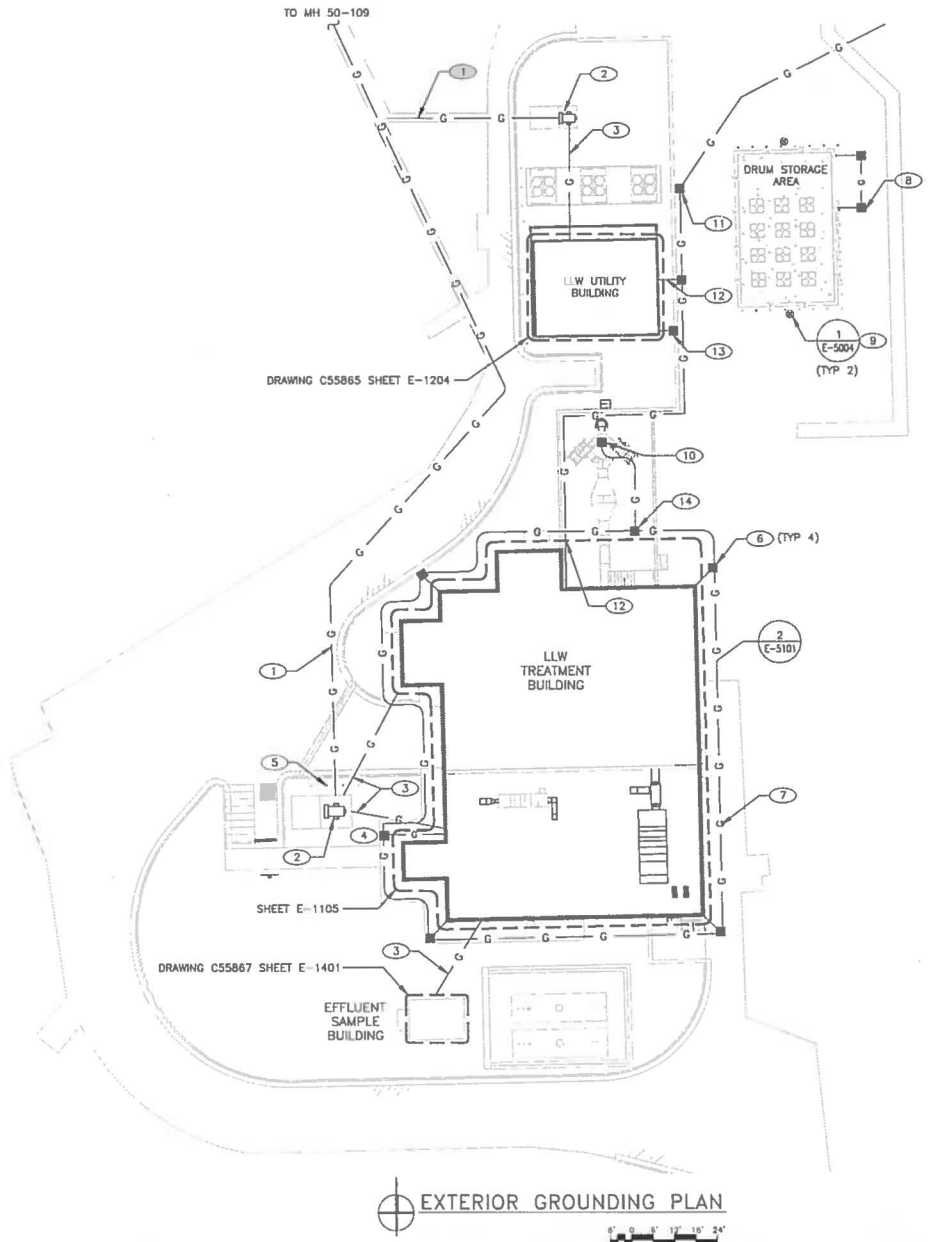

GENERAL NOTES

1. IF THIS SHEET IS NOT 24"X36", THEN IT IS A REDUCED SIZE PLOT. USE THE GRAPHIC SCALE ACCORDINGLY.
2. ALL GROUNDING ELECTRODE SYSTEM CONDUCTORS ARE #4/0 AWG UNLESS OTHERWISE SPECIFIED.
3. ALL LIGHTNING PROTECTION SYSTEM COUNTERPOISE CONDUCTORS ARE #1/0 AWG UNLESS OTHERWISE SPECIFIED.
4. SEE SHEET E-6102 GROUNDING SYSTEM DIAGRAM FOR OTHER CONDUCTOR SIZES.

KEYED NOTES

(1) INSTALL A BARE COPPER #4/0 AWG CONDUCTOR CENTERED IN THE BOTTOM 1/3 CONCRETE OF THE POWER DUCT BANK. BOND TO MANHOLE GROUNDS AND TO THE EQUIPMENT GROUNDING SYSTEM AT EACH END.

(2) BOND THE TRANSFORMER SECONDARY NEUTRAL TO THE GROUNDING ELECTRODE SYSTEM (REF SHEET E-6102).

(3) INSTALL A BARE COPPER #4/0 AWG CONDUCTOR CENTERED IN THE BOTTOM 1/3 CONCRETE OF THE LOW VOLTAGE POWER DUCT BANK. BOND THE GROUNDING CONDUCTOR TO THE BUILDING GROUNDING ELECTRODE SYSTEM.

(4) BOND THE LIGHTNING PROTECTION SYSTEM COUNTERPOISE TO THE MAIN GROUNDING ELECTRODE GROUND BAR. SEE SHEETS E-1105 AND E-5102.

(5) CONNECT GROUNDING GRID TO BARRIER POSTS USED FOR TRANSFORMER AND SWITCHGEAR PROTECTION. SEE SHEET C-1003 FOR POST LOCATIONS.

(6) CONNECT LIGHTNING PROTECTION SYSTEM DOWN CONDUCTORS TO COUNTERPOISE. SEE SHEET E-1106 FOR LIGHTNING PROTECTION SYSTEM AIR TERMINAL LAYOUT.

(7) INSTALL LIGHTNING PROTECTION SYSTEM GROUND RING (COUNTERPOISE) AROUND THE PERIMETER OF THE BUILDING FOUNDATION. COUNTERPOISE SHALL BE INSTALLED A MINIMUM OF 5'-0" FROM THE FOUNDATION FOOTING AND A MINIMUM OF 6'-0" FROM ANY ELECTRICAL SYSTEM OR COMMUNICATION SYSTEM GROUND ELECTRODE.

(8) BOND THE GATE POSTS TOGETHER USING DIRECT BURIED 4/0 COPPER CONDUCTOR.

(9) INSTALL LIGHTNING PROTECTION MAST 3'-0" FROM EDGE OF PAD AND IN LINE WITH CENTER OF PAD.

(10) BOND BASE OF STACK TO LIGHTING PROTECTION SYSTEM COUNTERPOISE.

(11) BOND THE TELECOMMUNICATIONS DUCT BANK GROUND CONDUCTOR TO THE TELECOMMUNICATION PULL BOX.

(12) ROUTE TELECOMMUNICATIONS GROUND CONDUCTOR WITH TELECOMMUNICATIONS ENTRANCE CONDUITS AND BOND TO BUILDING GROUNDING ELECTRODE SYSTEM AT BUILDING PERIMETER.

(13) BOND PIPE RACK TO BUILDING GROUNDING ELECTRODE SYSTEM.

(14) INSTALL LPS COUNTERPOISE BENEATH EXHAUST FAN CONCRETE. MAINTAIN REQUIRED SEPARATION BETWEEN GROUNDING SYSTEMS. SEE KEYED NOTE 7.

NO	DATE	CLASS REV	ADC	DESCRIPTION	DWN	DES	CHKD	SUB	APP

AECOM

RLWTF-UP LOW LEVEL WASTE SUBPROJECT

EXTERIOR GROUNDING PLAN

BLDG. 230 TA-50

DRAWN	V DAVISON
DESIGN	S MOORE
CHECKED	G MOE
DATE	5/9/14

SUBMITTED: MANNY TARIN — APPROVED FOR RELEASE: ED ARTIGLIA

Los Alamos NATIONAL LABORATORY — PO Box 1663, Los Alamos, New Mexico 87545

SHEET E-1003

312 OF 434

CLASSIFICATION | REVIEWER | DATE

PROJECT ID 100761 | DRAWING NO C55864 | REV 0

EUGENE DAVID MOE — NEW MEXICO — 21369 — PROFESSIONAL ENGINEER — 5/9/14

File Location: P:\RLWTF LOW-LEVEL WASTE FACILITY\300 CAD\C55864 MAIN BUILDING\SHEETS\18 ELECTRICAL\\55864-E-1003-R0.DWG
Plotted By: MOORE, STEPHEN Plot Date: Monday, May 05, 2014
12363

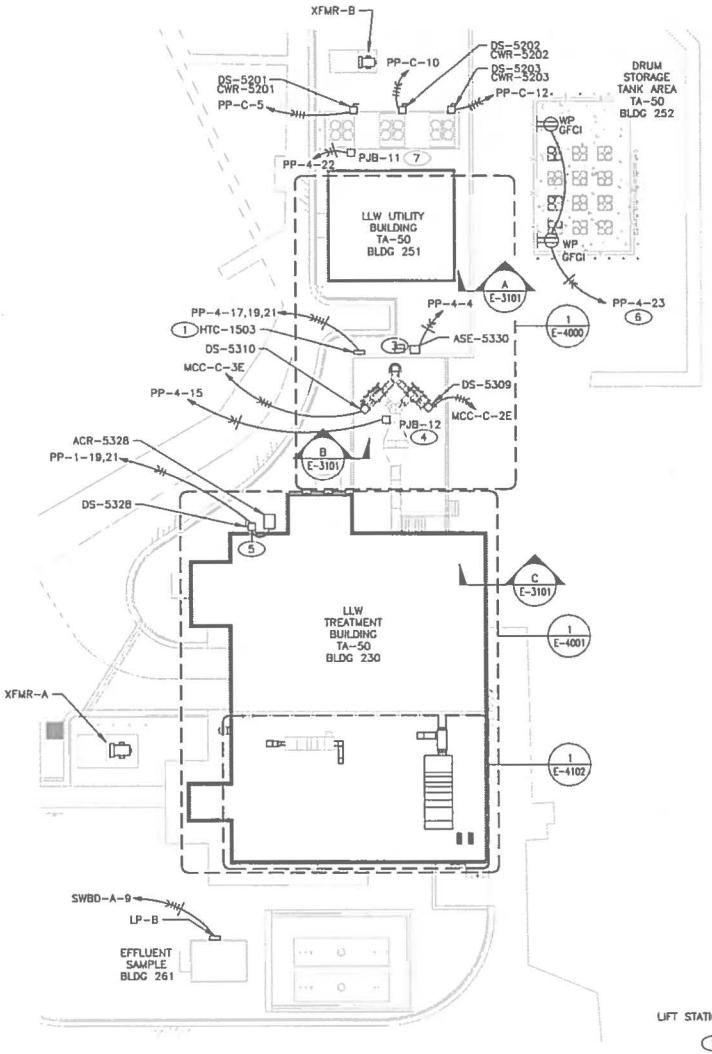

EXTERIOR POWER PLAN

1/16"=1'-0"

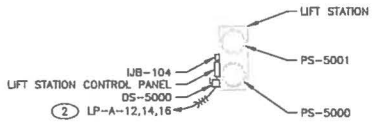

GENERAL NOTES

1. IF THIS SHEET IS NOT 24"X36", THEN IT IS A REDUCED SIZE PLOT. USE THE GRAPHIC SCALE ACCORDINGLY.
2. FOR SYMBOLS AND ABBREVIATIONS, SEE SHEET E-0001.
3. UNLESS OTHERWISE NOTED, ALL DISCONNECT SWITCHES ARE PROVIDED AS AN INTEGRAL PART OF EQUIPMENT SHOWN.

KEYED NOTES

(1) SEE SHEET E-4000 FOR HEAT TRACE PLAN.

(2) UNDERGROUND BRANCH CIRCUIT TO LIFT STATION. SEE SHEET C-5002 FOR SANITARY SEWER LIFT STATION ELECTRICAL DETAILS.

(3) AIR STACK SAMPLING ENCLOSURE.

(4) INSTALL PJB-12 ON FAN SUPPORT APPROXIMATELY 5' ABOVE GRADE FOR POWER TO MOTORIZED DAMPERS. SEE DRAWING C55865 SHEET E-5203.

(5) DISCONNECT IS FOR BOTH COMPONENTS OF SPLIT SYSTEM. SEE SHEET E-1101 KEYED NOTE 7.

(6) INSTALL TWO GENERAL PURPOSE RECEPTACLES. MOUNT ON INSIDE OF FENCE POST 18" ABOVE GRADE.

(7) INSTALL PJB-11 ON PIPE SUPPORT APPROXIMATELY 5' ABOVE GRADE FOR POWER TO MOTOR OPERATED VALVES. SEE DRAWING C55865 SHEET E-5202.

NO	DATE	CLASS REV	ADC	DESCRIPTION	DWN	DES	CHKD	SUB	APP

AECOM

RLWTF-UP LOW LEVEL WASTE SUBPROJECT

EXTERIOR POWER PLAN

DRAWN	V DAVISON
DESIGN	S MOORE
CHECKED	D MOE
DATE	5/8/14

BLDG. 230 TA-50

SUBMITTED MANNY TARIN | APPROVED FOR RELEASE ED ARTIGLIA

Los Alamos NATIONAL LABORATORY PO Box 1663 Los Alamos, New Mexico 87545

CLASSIFICATION | REVIEWER | DATE

PROJECT ID	DRAWING NO	REV
100761	C55864	0

SHEET E-1004

313 OF 434

EUGENE DAVID MOE NEW MEXICO 21389 REGISTERED PROFESSIONAL ENGINEER

File Location: P:\RLWTF LOW-LEVEL WASTE FACILITY\300 CAD\C55864 MAIN BUILDING\SHEETS\10 ELECTRICAL\55864-E-1004-R0.DWG
Plotted By: MOORE, STEPHEN Plot Date: Monday, May 05, 2014

19321

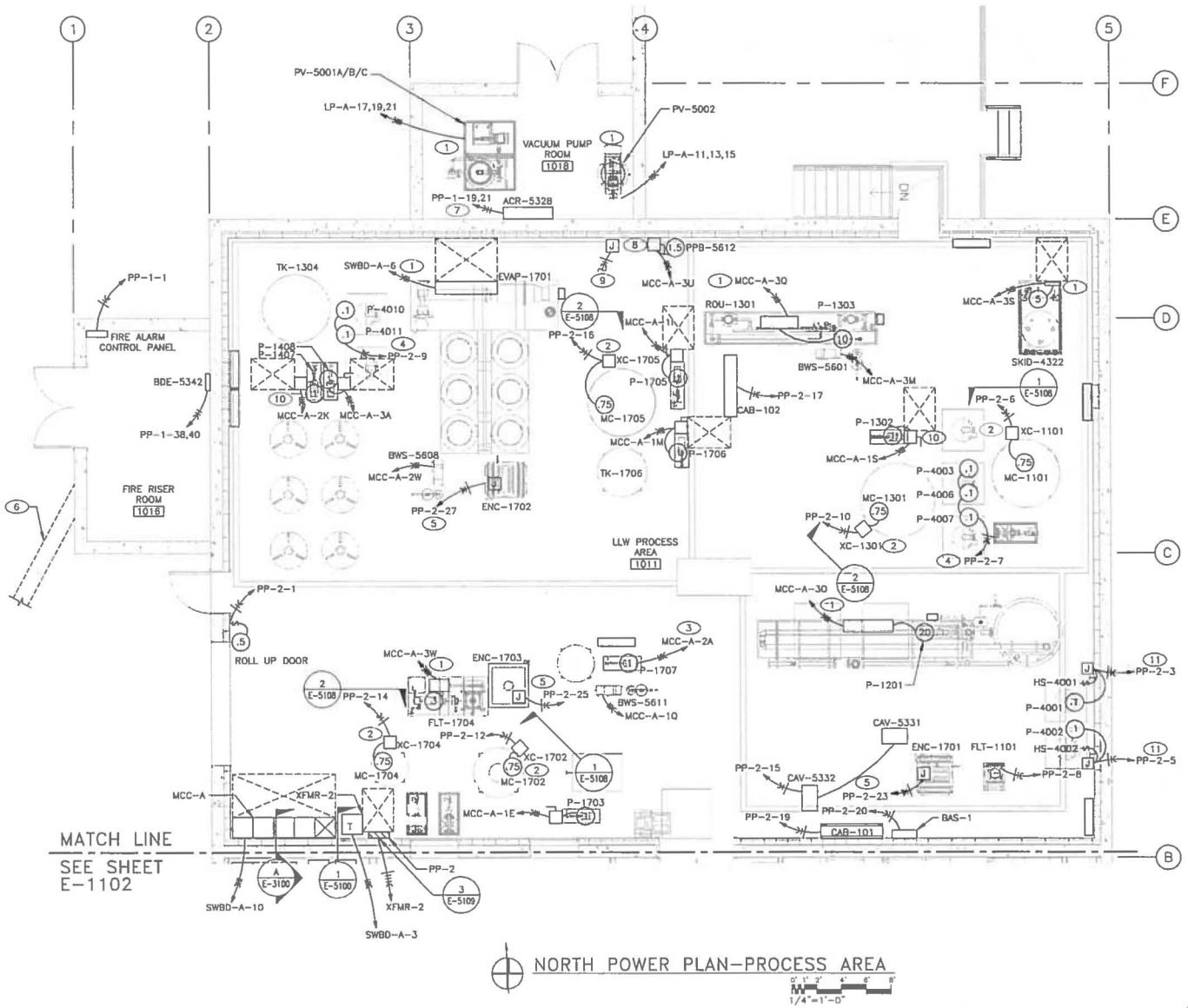

NORTH POWER PLAN–PROCESS AREA

1/4"=1'-0"

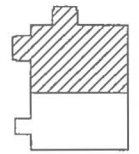

KEY PLAN
SCALE: NONE

GENERAL NOTES

1. IF THIS SHEET IS NOT 24"X36", THEN IT IS A REDUCED SIZE PLOT. USE THE GRAPHIC SCALE ACCORDINGLY.
2. FOR SYMBOLS AND ABBREVIATIONS, SEE SHEET E-0001.
3. UNLESS OTHERWISE NOTED, ALL DISCONNECT SWITCHES ARE PROVIDED AS AN INTEGRAL PART OF THE EQUIPMENT SHOWN.

KEYED NOTES

(1) LOCAL DISCONNECT AND MOTOR CONTROLLER PROVIDED WITH SKID.

(2) PROVIDE SIZE 0 REMOTE COMBINATION STARTER WITH INTEGRAL DISCONNECT SWITCH FOR MIXER MOTOR.

(3) LOCAL DISCONNECT NOT REQUIRED. MOTOR WITHIN SIGHT OF MCC-A.

(4) PROVIDE TWISTLOCK NEMA L5-15R SINGLE RECEPTACLE FOR EACH CHEMICAL DOSING PUMP.

(5) ENCLOSURE PROVIDED WITH PREWIRED INTERIOR LIGHT AND RECEPTACLE. MAKE TERMINATION IN JUNCTION BOX PROVIDED WITH ENCLOSURE.

(6) DUCT BANK <DB6> FOR FUTURE FIRE PUMP.

(7) POWER SUPPLIED VIA DISCONNECT FOR OUTDOOR UNIT. SEE SHEET E-1004 KEYED NOTE 5.

(8) PROVIDE LOCAL DISCONNECT FOR SAFETY SHOWER BOOSTER PUMP SUPPLIED WITH INTEGRAL MOTOR AND MOTOR ADJUSTABLE SPEED DRIVE.

(9) INSTALL JUNCTION BOX FOR CONNECTION TO SOLENOID (SOV-5503) LOCATED IN DRAIN TRENCH. SEE SHEET E-4100 KEYED NOTE 6.

(10) LOCAL DISCONNECT PROVIDED WITH SKID.

(11) PROVIDE 20A, MOTOR RATED SWITCH TO OPERATE TANK AGITATOR (NOT SHOWN) VIA SWITCHED TWISTLOCK NEMA 5-15R SINGLE RECEPTACLE. PROVIDE TWISTLOCK NEMA L5-15R SINGLE RECEPTACLE FOR CHEMICAL DOSING PUMP.

NO	DATE	CLASS REV	ADC	DESCRIPTION	DWN	DES	CHKD	SUB	APP

AECOM

RLWTF-UP LOW LEVEL WASTE SUBPROJECT

NORTH POWER PLAN - PROCESS AREA

DRAWN	V DAVISION	
DESIGN	S MOORE	Sm
CHECKED	G MOE	
DATE	5/8/14	

BLDG. 230 TA-50

SUBMITTED MANNY TARIN — APPROVED FOR RELEASE ED ARTIGLIA

Los Alamos NATIONAL LABORATORY PO Box 1663 Los Alamos, New Mexico 87545

SHEET E-1101

314 OF 434

CLASSIFICATION — REVIEWER — DATE

PROJECT ID 100761 — DRAWING NO C55864 — REV 0

59821 :

File Location: P:\RLWTF LOW-LEVEL WASTE FACILITY\300 CAD\C55864 MAIN BUILDING\SHEETS\10 ELECTRICAL\55864-E-1101-PD.DWG
Plotted By: MOORE, STEPHEN Plot Date: Monday, May 05, 2014

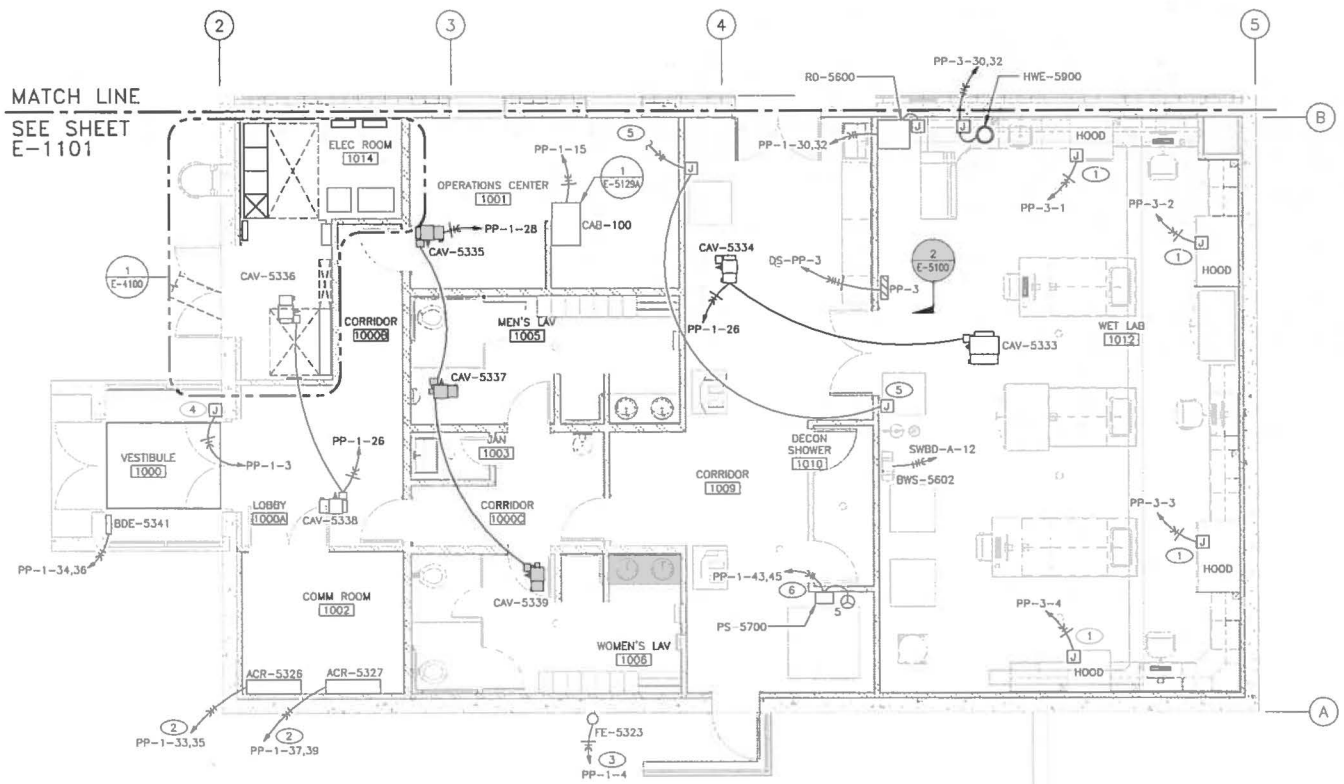

SOUTH POWER PLAN–WET LAB, SUPPORT AREA

1/4"=1'-0"

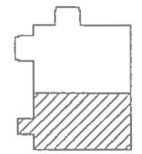

KEY PLAN
SCALE: NONE

GENERAL NOTES

1. IF THIS SHEET IS NOT 24"X36", THEN IT IS A REDUCED SIZE PLOT. USE THE GRAPHIC SCALE ACCORDINGLY.
2. FOR SYMBOLS AND ABBREVIATIONS, SEE SHEET E-0001.
3. UNLESS OTHERWISE NOTED, ALL DISCONNECT SWITCHES ARE PROVIDED AS AN INTEGRAL PART OF EQUIPMENT SHOWN.

KEYED NOTES

(1) INSTALL HOOD WITH PREWIRED LIGHT FIXTURE (2-T8), LIGHT SWITCH AND TWO GFCI RECEPTACLES (NOT SHOWN). MAKE TERMINATION IN JUNCTION BOX PROVIDED WITH HOOD.

(2) POWER SUPPLIED VIA DISCONNECT ON ROOF. SEE SHEET E-4102.

(3) POWER TO WALL MOUNTED EXHAUST FAN ROUTED FROM INSIDE BUILDING VIA WIRE CHASE PROVIDED WITH FAN MOTOR. DISCONNECT PROVIDED WITH FAN.

(4) POWER TO ACCESS CONTROL SYSTEM. SEE SHEET X-1101.

(5) INSTALL JUNCTION BOXES FOR CONNECTION OF FLOOR DRAIN SOLENOIDS (SOV-5501 & SOV-5502) LOCATED IN DRAIN TRENCH TO SOLENOID CONTROL PANEL. SEE SHEET E-4100 KEYED NOTE 6.

(6) INSTALL SUMP PUMP INTERLOCK RELAY. THE SUMP PUMP RECEPTACLE IS INTERLOCKED WITH TANK T-1101 HIGH LEVEL ALARM. SEE MOTOR STARTER CONTROL DIAGRAM SHEET E-6130.

NO	DATE	CLASS REV	ADC	DESCRIPTION	DWN	DES	CHKD	SUB	APP

AECOM

RLWTF-UP LOW LEVEL WASTE SUBPROJECT

SOUTH POWER PLAN – WET LAB, SUPPORT AREA

BLDG. 230 TA-50

DRAWN	V DAWSON
DESIGN	S MOORE
CHECKED	G MOE
DATE	5/8/14

SUBMITTED MANNY TARIN

APPROVED FOR RELEASE ED ARTIGLIA

Los Alamos NATIONAL LABORATORY PO Box 1663 Los Alamos, New Mexico 87545

SHEET E-1102

315 OF 434

CLASSIFICATION | REVIEWER | DATE

PROJECT ID 100761 | DRAWING NO C55864 | REV 0

EUGENE DAVID MOE 21369 NEW MEXICO PROFESSIONAL ENGINEER 5/8/14

File Location: P:\RLWTF LOW-LEVEL WASTE FACILITY\500 CAD\C55864 MAIN BUILDING\SHEETS\10 ELECTRICAL\55864-E-1102 RO.DWG
Plotted By: MOORE, STEPHEN Plot Date: Friday, May 09, 2014
159271

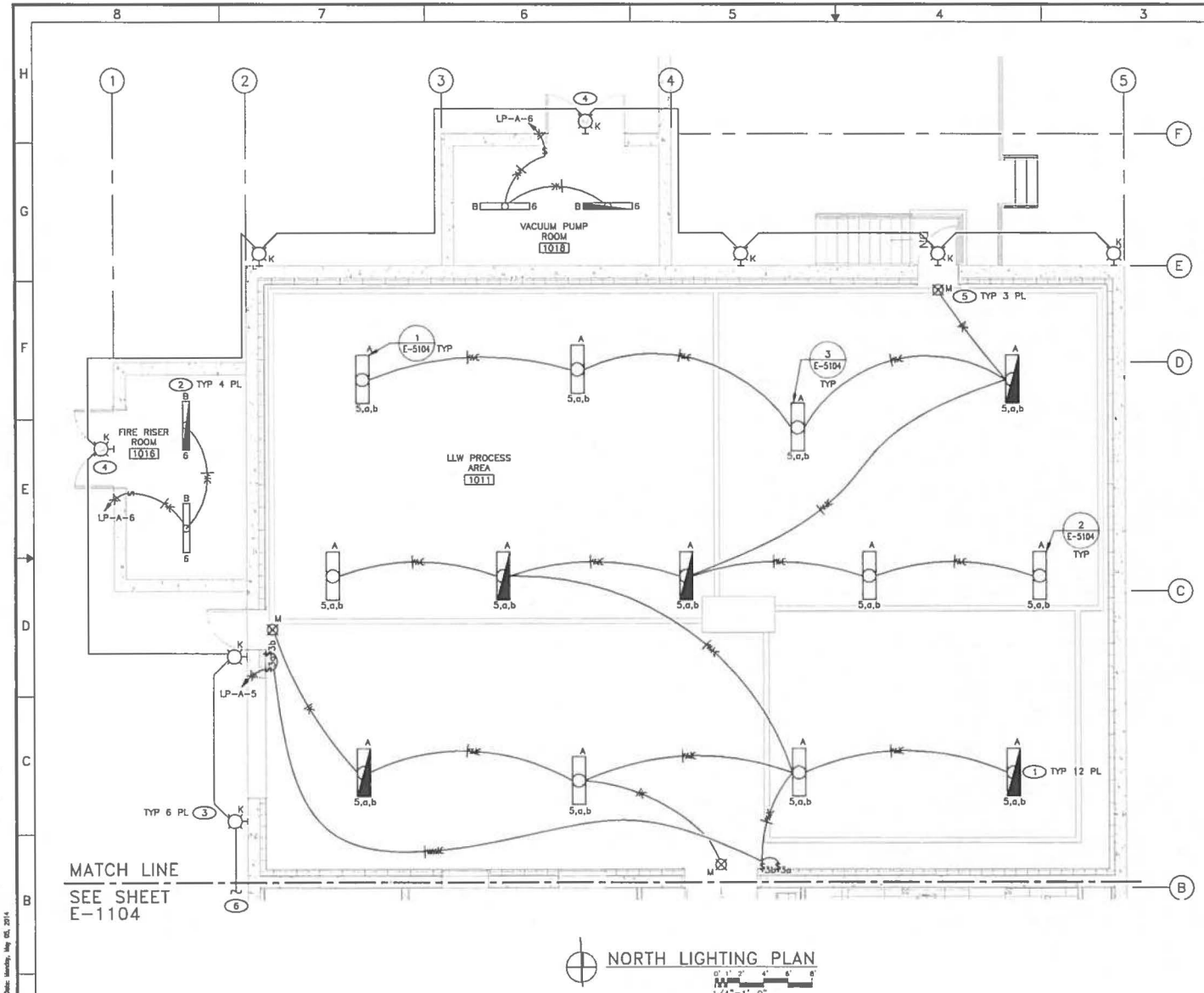

NORTH LIGHTING PLAN

1/4"=1'-0"

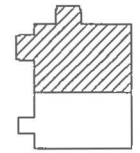

KEY PLAN
SCALE: NONE

GENERAL NOTES

1. IF THIS SHEET IS NOT 24"X36", THEN IT IS A REDUCED SIZE PLOT. USE THE GRAPHIC SCALE ACCORDINGLY.
2. SEE SHEET E-0001 FOR LIGHTING SYMBOLS.
3. INSTALL ALL EQUIPMENT PER MANUFACTURER SPECIFICATIONS.
4. MOUNT SWITCHES 4'-0" FROM FINISHED FLOOR OR GRADE, UNLESS OTHERWISE INDICATED.
5. ROUTE CIRCUITS VIA THE LIGHTING CONTROL DEVICE PER MANUFACTURERS INSTRUCTIONS.
6. SEE SHEET E-7103 FOR LUMINAIRE AND LIGHTING CONTROL SCHEDULES.
7. CONDUCTORS ARE #12 AWG UNLESS OTHERWISE NOTED.

KEYED NOTES

1. SUSPEND LUMINAIRE "A" AT 10' AFF.
2. INSTALL LUMINAIRE "B" 9' AFF.
3. INSTALL LUMINAIRE "K" AT 14'-4" BELOW PARAPET WITH PHOTOCELL CONTROL FROM LC-A.
4. INSTALL LUMINAIRE "K" AT 6'-4" BELOW PARAPET.
5. INSTALL LUMINAIRE "M" AT 8' AFF.
6. BUILDING LIGHTING CONTROLLED VIA LIGHTING CONTROL PANEL (LC-A). SEE SHEET E-4100 FOR LC-A LOCATION AND BRANCH CIRCUIT.

NO	DATE	CLASS REV	ADC	DESCRIPTION	DWN	DES	CHKD	SUB	APP

AECOM

RLWTF-UP LOW LEVEL WASTE SUBPROJECT

NORTH LIGHTING PLAN – PROCESS AREA

DRAWN	V DAVISON
DESIGN	E MOORE
CHECKED	D MOE
DATE	5/8/14

BLDG. 230 TA-50

SUBMITTED MANNY TARIN — APPROVED FOR RELEASE ED ARTIGLIA

Los Alamos NATIONAL LABORATORY PO Box 1663 Los Alamos, New Mexico 87545

SHEET E-1103

316 OF 434

CLASSIFICATION | REVIEWER | DATE

PROJECT ID 100761 | DRAWING NO C55864 | REV 0

EUGENE DAVID MOE NEW MEXICO 21389 PROFESSIONAL ENGINEER 5/8/14

File Location: P:\RLWTF LOW-LEVEL WASTE FACILITY\300 CAD\C55864 MAIN BUILDING\SHEETS\10 ELECTRICAL\55864-E-1103-R0.DWG
Plotted By: MOORE, STEPHEN Plot Date: Monday, May 05, 2014

LA-UR-14-23211

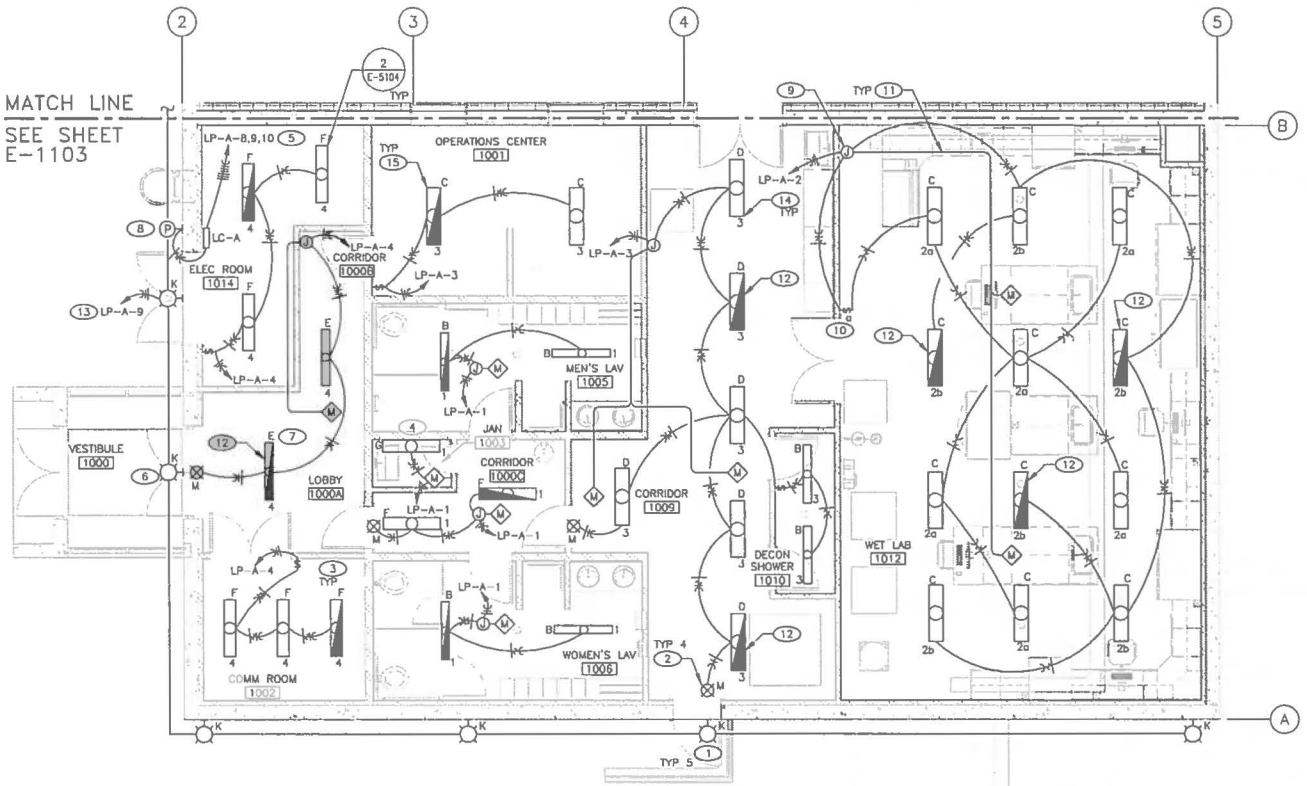

SOUTH LIGHTING PLAN

1/4"=1'-0"

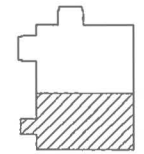

KEY PLAN
SCALE: NONE

GENERAL NOTES

1. IF THIS SHEET IS NOT 24"X36", THEN IT IS A REDUCED SIZE PLOT. USE THE GRAPHIC SCALE ACCORDINGLY.
2. SEE SHEET E-0001 FOR LIGHTING SYMBOLS.
3. INSTALL ALL EQUIPMENT PER MANUFACTURER SPECIFICATIONS.
4. MOUNT SWITCHES 4'-0" FROM FINISHED FLOOR OR GRADE, UNLESS OTHERWISE INDICATED.
5. ROUTE CIRCUITS VIA THE LIGHTING CONTROL DEVICE PER MANUFACTURER INSTRUCTIONS.
6. SEE SHEET E-7103 FOR LUMINAIRE AND LIGHTING CONTROL SCHEDULES.
7. ALL CONDUCTORS ARE #12 AWG UNLESS OTHERWISE NOTED.

KEYED NOTES

(1) INSTALL SURFACE MOUNTED LUMINAIRE "K" AT 6'-4" BELOW PARAPET.
(2) INSTALL LUMINAIRE "M" AT 8' AFF.
(3) INSTALL LUMINAIRE "F" AT 9'-6" AFF IN ROOMS 1002 AND 1014.
(4) INSTALL LUMINAIRE "G" AT 7'-6" AFF.
(5) VIA LIGHTING CONTROL PANEL (LC-A). SEE SHEET E-7103 FOR SCHEDULE OF ROOM LUMINAIRES TO BE CONNECTED TO CONTROL PANEL. SEE SHEET E-4100 FOR LC-A LOCATION.
(6) INSTALL LUMINAIRE "K" AT 8'-6" AFF.
(7) LUMINAIRE "E" HAS A STRUCTURE MEASURING 2'x4', AND THE LIGHTING ELEMENT MEASURES 4"X4". INSTALL IN SUSPENDED CEILING 9'-0" AFF.
(8) PHOTOCELL MOUNTED 12' ABOVE GRADE.
(9) INSTALL JUNCTION BOX AND OCCUPANCY SENSOR "POWER PACK", ABOVE CEILING. OCCUPANCY SENSOR SHALL OPERATE FIXTURES "A" AND "B".
(10) WALL SWITCH SHALL OPERATE FIXTURES "A" OFF TO OVERRIDE OCCUPANCY SENSOR.
(11) OCCUPANCY SENSOR CONTROL WIRING.
(12) UNSWITCHED FIXTURE TO REMAIN ON FOR NIGHT LIGHTING.
(13) LIGHTING CIRCUIT IS CONTROLLED FROM LIGHTING CONTACTOR PANEL.
(14) INSTALL LUMINAIRES TYPE B, D AND F IN ROOMS 1000C, 1009 AND 1010 SURFACE MOUNTED TO GYPSUM BOARD CEILING AT 9'-0" AFF.
(15) INSTALL LUMINAIRE TYPE C IN SUSPENDED CEILING AT 9'-0" AFF.

NO	DATE	CLASS REV	ADC	DESCRIPTION	DWN	DES	CHKD	SUB	APP

AECOM

RLWTF-UP LOW LEVEL WASTE SUBPROJECT

SOUTH LIGHTING PLAN – WET LAB, SUPPORT AREA

BLDG. 230 TA-50

DRAWN	V DAVISON
DESIGN	S MOORE
CHECKED	G MOE
DATE	5/8/14

SUBMITTED MANNY TARIN

APPROVED FOR RELEASE ED ARTIGLIA

Los Alamos NATIONAL LABORATORY PO Box 1663 Los Alamos, New Mexico 87545

SHEET E-1104

317 OF 434

CLASSIFICATION REVIEWER DATE

PROJECT ID 100761 DRAWING NO C55864 REV 0

89627 :

File Location: P:\RLWTF LOW-LEVEL WASTE FACILITY\300 CAD\C55864 MAIN BUILDING\SHEETS\18 ELECTRICAL\55864-E-1104-RIG.DWG
Plotted By: DAVISON, VANESSA Plot Date: Wednesday, May 14, 2014

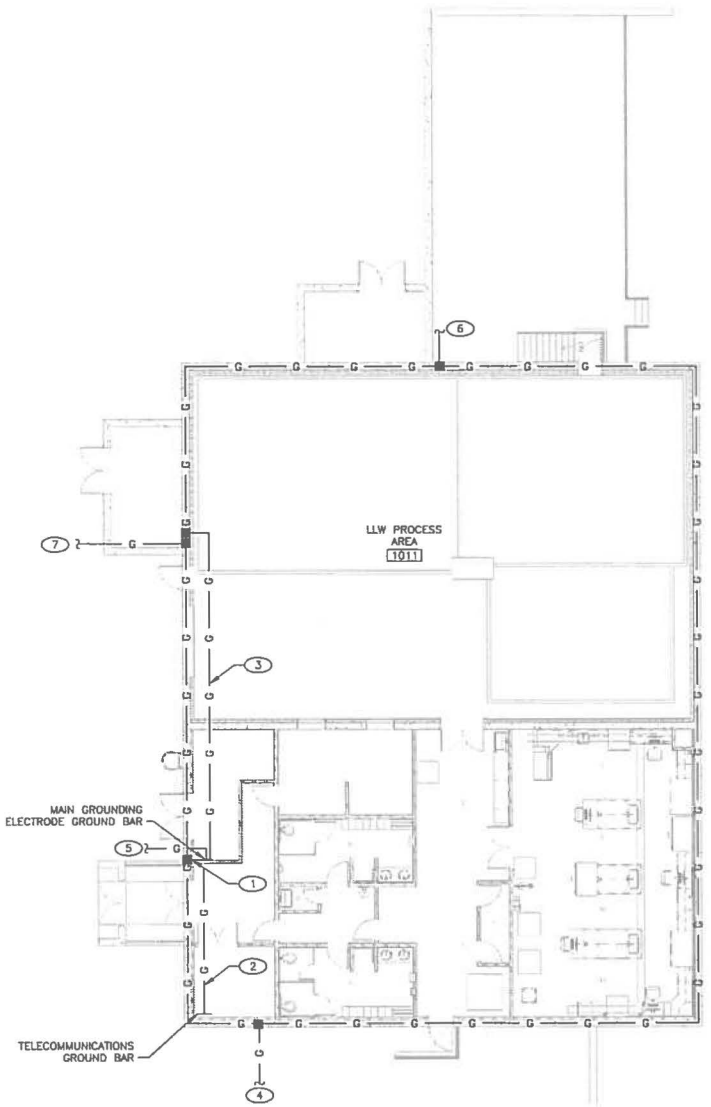

GROUNDING PLAN

1/8"=1'-0"

GENERAL NOTES

1. IF THIS SHEET IS NOT 24"X36", THEN IT IS A REDUCED SIZE PLOT. USE THE GRAPHIC SCALE ACCORDINGLY.
2. ALL GROUNDING ELECTRODE SYSTEM CONDUCTORS ARE #4/0 AWG UNLESS OTHERWISE SPECIFIED.
3. ALL LIGHTNING PROTECTION SYSTEM COUNTERPOISE CONDUCTORS ARE #1/0 AWG UNLESS OTHERWISE SPECIFIED.
4. SEE SHEET E-6102 GROUNDING DIAGRAM FOR OTHER CONDUCTOR SIZES.

KEYED NOTES

(1) INSTALL CONCRETE ENCASED ELECTRODE PER SHEET E-6102 KEYED NOTE 6. PROVIDE 5 FEET OF BARE COPPER A.F.F. FOR BONDING MAIN GROUNDING ELECTRODE GROUND BAR TO GROUNDING ELECTRODE SYSTEM.

(2) BOND THE TELECOMMUNICATIONS GROUNDING BAR TO THE BUILDING ELECTRICAL SYSTEM MAIN GROUNDING ELECTRODE GROUND BAR USING INSULATED THW #4/0 AWG CONDUCTOR INSTALLED IN 1 INCH PVC.

(3) BOND FIRE SPRINKLER RISER AND OTHER METALLIC PIPING SYSTEMS TO MAIN GROUNDING ELECTRODE BAR (REF E-6102).

(4) BOND EFFLUENT SAMPLE BUILDING FEEDER DUCT BANK GROUND CONDUCTOR TO BUILDING GROUNDING ELECTRODE SYSTEM.

(5) BOND THE LIGHTNING PROTECTION SYSTEM COUNTERPOISE TO THE MAIN GROUND ELECTRODE BAR. SEE SHEET E-1003.

(6) BOND TELECOMMUNICATION ENTRANCE GROUND CONDUCTOR TO BUILDING GROUNDING ELECTRODE SYSTEM.

(7) BOND SPARE SERVICE DUCT BANK GROUND CONDUCTOR TO BUILDING GROUNDING ELECTRODE SYSTEM.

NO	DATE	CLASS REV	ADC	DESCRIPTION	DWN	DES	CHKD	SUB	APP

AECOM

RLWTF-UP LOW LEVEL WASTE SUBPROJECT

GROUNDING PLAN

DRAWN	V DAVISON
DESIGN	S MOORE
CHECKED	G MOE
DATE	5/8/14

BLDG. 230 TA-50

SUBMITTED MANNY TARIN — APPROVED FOR RELEASE ED ARTIOLIA

Los Alamos NATIONAL LABORATORY PO Box 1663 Los Alamos, New Mexico 87545

SHEET E-1105

318 OF 434

CLASSIFICATION | REVIEWER | DATE

PROJECT ID 100761 | DRAWING NO C55864 | REV 0

EUGENE DAVID MOE — NEW MEXICO — 21368 — REGISTERED PROFESSIONAL ENGINEER

File Location: P:\RLWTF LOW-LEVEL WASTE FACILITY\500 CAD\C55864 MAIN BUILDING\SHEETS\10 ELECTRICAL\\55864-E-1105-RD.DWG
Plotted By: MOORE, STEPHEN Plot Date: Monday, May 05, 2014

69627 : 12359

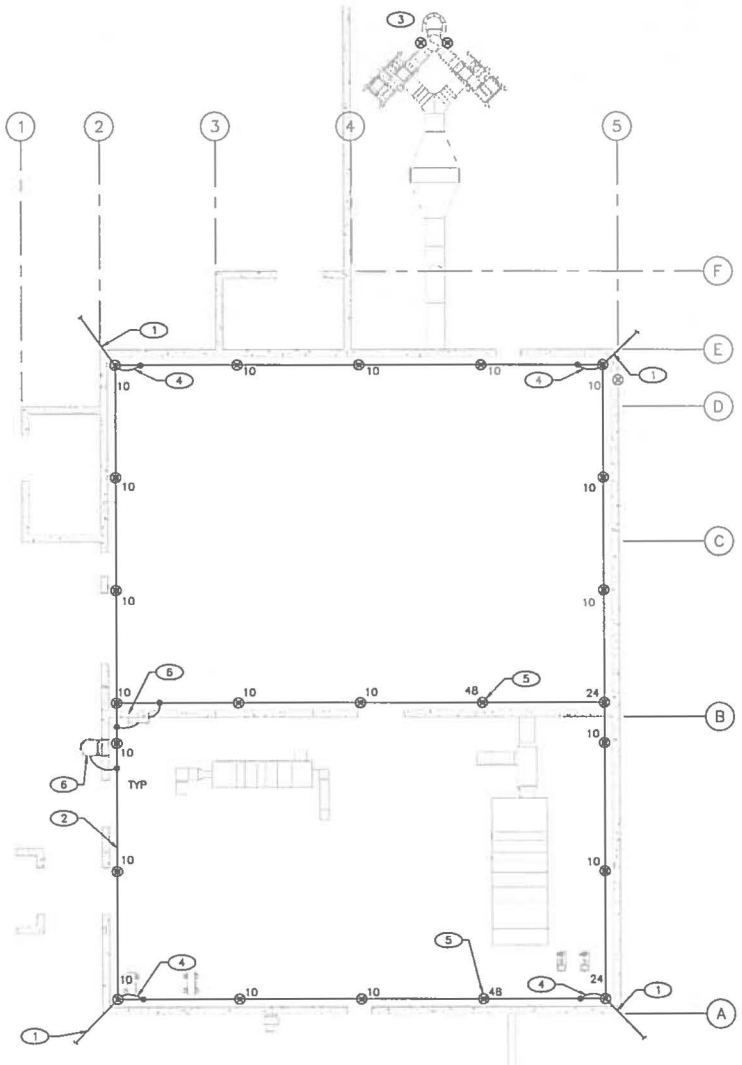

LIGHTNING PROTECTION PLAN

1/8"=1'-0"

GENERAL NOTES

1. IF THIS SHEET IS NOT 24"X36", THEN IT IS A REDUCED SIZE PLOT. USE THE GRAPHIC SCALE ACCORDINGLY.
2. USE A QUALIFIED INSTALLER TO DESIGN AND INSTALL THE LIGHTNING PROTECTION SYSTEM. INSTALLER MUST HAVE CURRENT LIGHTNING PROTECTION INSTITUTE MASTER INSTALLER CERTIFICATION OR CURRENT UL LISTING FOR LIGHTNING PROTECTION.
3. ALL MATERIALS TO BE UNDERWRITER'S LABORATORIES APPROVED WITH "A" LABELS ON CONDUCTORS @ 10'-0" INTERVALS AND "B" LABELS ON ALL AIR TERMINALS.
4. INSTALLATION SHALL COMPLY IN ALL RESPECTS TO LIGHTNING PROTECTION INSTITUTE CODE 175. INSTALLATION SHALL BE MADE UNDER THE SUPERVISION OF A LIGHTNING PROTECTION INSTITUTE CERTIFIED MASTER INSTALLER.
5. ALL LIGHTING PROTECTION CONDUCTORS SHALL BE COPPER.

KEYED NOTES

(1) INSTALL #1/0 AWG COPPER DOWN CONDUCTOR AND BOND TO COUNTERPOISE. SEE SHEET E-1003. ALL TELECOMMUNICATIONS CONDUIT/WIRE SHALL MAINTAIN 6'-0" MIN. CLEARANCE FROM LIGHTNING PROTECTION DOWN CONDUCTORS.

(2) MAIN CONDUCTOR BONDING METHODS, SIZE AND MATERIAL TO BE COMPATIBLE WITH ROOFING MATERIAL PER SPECIFICATION SECTION 26 4100.

(3) INSTALL (2) AIR TERMINALS AT TOP OF STACK. PROVIDE DOWN CONDUCTORS BONDED TO STACK 10 FT BELOW THE TOP. BOND BASE OF STACK TO LIGHTNING PROTECTION SYSTEM COUNTERPOISE. SEE SHEET E-1003.

(4) BOND REINFORCING STEEL IN CONCRETE WALLS TO DOWN CONDUCTORS AT THE UPPER AND LOWER EXTREMITIES USING #1/0 AWG COPPER. MAKE CONNECTIONS USING LISTED CLAMPS OR WELDS.

(5) INSTALL 48" AIR TERMINAL WITH ADDITIONAL SUPPORTS IN ACCORDANCE WITH NFPA 780 SECTION 4.6.2.2.

(6) BOND LADDERS AT TOP AND BOTTOM TO THE MAIN CONDUCTOR.

"PRIORITY DRAWING"

NO	DATE	CLASS REV	ADC	DESCRIPTION	DWN	DES	CHKD	SUB	APP

AECOM

RLWTF-UP LOW LEVEL WASTE SUBPROJECT

LIGHTNING PROTECTION PLAN

BLDG. 230 TA-50

DRAWN	V DAVISON
DESIGN	S. MOORE
CHECKED	D MOE
DATE	5/8/14

SUBMITTED MANNY TARIN

APPROVED FOR RELEASE ED ARTIOLIA

Los Alamos NATIONAL LABORATORY PO Box 1663 Los Alamos, New Mexico 87545

SHEET E-1106

319 OF 434

CLASSIFICATION REVIEWER DATE

PROJECT ID 100761 DRAWING NO C55864 REV 0

EUGENE DAVID MOE NEW MEXICO 21389 PROFESSIONAL ENGINEER

File Location: P:\RLWTF LOW-LEVEL WASTE FACILITY\300 CAD\C55864 MAIN BUILDING\SHEETS\10 ELECTRICAL\55864-E-1106-R0.DWG
Plotted By: MOORE, STEPHEN Plot Date: Monday, May 05, 2014

91279

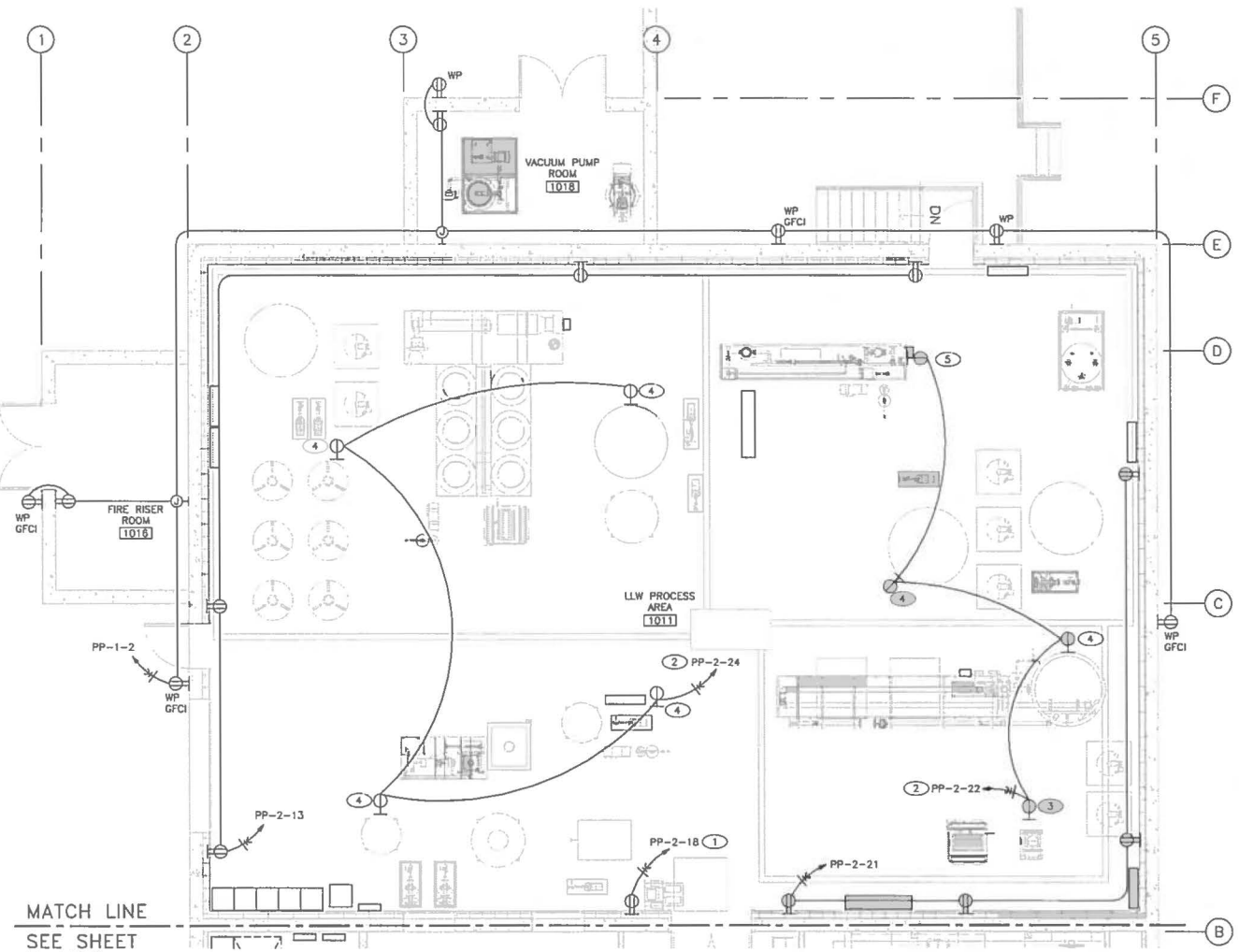

NORTH RECEPTACLE PLAN–PROCESS AREA

1/4"=1'-0"

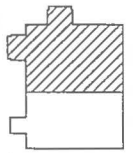

KEY PLAN
SCALE: NONE

GENERAL NOTES

1. IF THIS SHEET IS NOT 24"X36", THEN IT IS A REDUCED SIZE PLOT. USE THE GRAPHIC SCALE ACCORDINGLY.
2. RECEPTACLES ARE TO BE INSTALLED AT 18" ABOVE FINISHED FLOOR UNLESS OTHERWISE NOTED.
3. ALL GENERAL PURPOSE RECEPTACLES SHOWN SHALL BE GFCI TYPE OUTLETS.

KEYED NOTES

(1) DEDICATED RECEPTACLE FOR HAND AND FOOT MONITOR.

(2) DEDICATED CIRCUIT FOR CAM RECEPTACLES. MOUNT RECEPTACLES TO CAM BACKPLANE. SEE SHEET E-5102.

(3) SECURE TO CAM BACK PLANE AT FLT-1101 SUPPORT STAND.

(4) SECURE TO CAM BACK PLANE AT SUPPORT STAND WELDED TO FLOOR EMBEDS.

(5) SECURE TO CAM BACKPLANE PLANE AT ROU-1301 SUPPORT STAND.

NO	DATE	CLASS REV	ADC	DESCRIPTION	DWN	DES	CHKD	SUB	APP

AECOM

RLWTF-UP LOW LEVEL WASTE SUBPROJECT

NORTH RECEPTACLE PLAN – PROCESS AREA

DRAWN	V DAVISON	
DESIGN	S MOORE	
CHECKED	G MOE	
DATE	9/8/14	

BLDG. 230 TA-50

SUBMITTED: MANNY TARIN

APPROVED FOR RELEASE: ED ARTIGLIA

Los Alamos NATIONAL LABORATORY
PO Box 1663 Los Alamos, New Mexico 87545

SHEET E-1107

320 OF 434

CLASSIFICATION | REVISION | DATE

PROJECT ID 100761 | DRAWING NO C55864 | REV 0

EUGENE DAVID MOE — NEW MEXICO — 21369 — PROFESSIONAL ENGINEER — 8/21/14

File Location: P:\RLWTF LOW-LEVEL WASTE FACILITY\300 CAD\C55864 MAIN BUILDING\SHEETS\10 ELECTRICAL\C55864-E-11107-R0.DWG
Plotted By: MOORE, STEPHEN Plot Date: Monday, May 05, 2014

E-1107

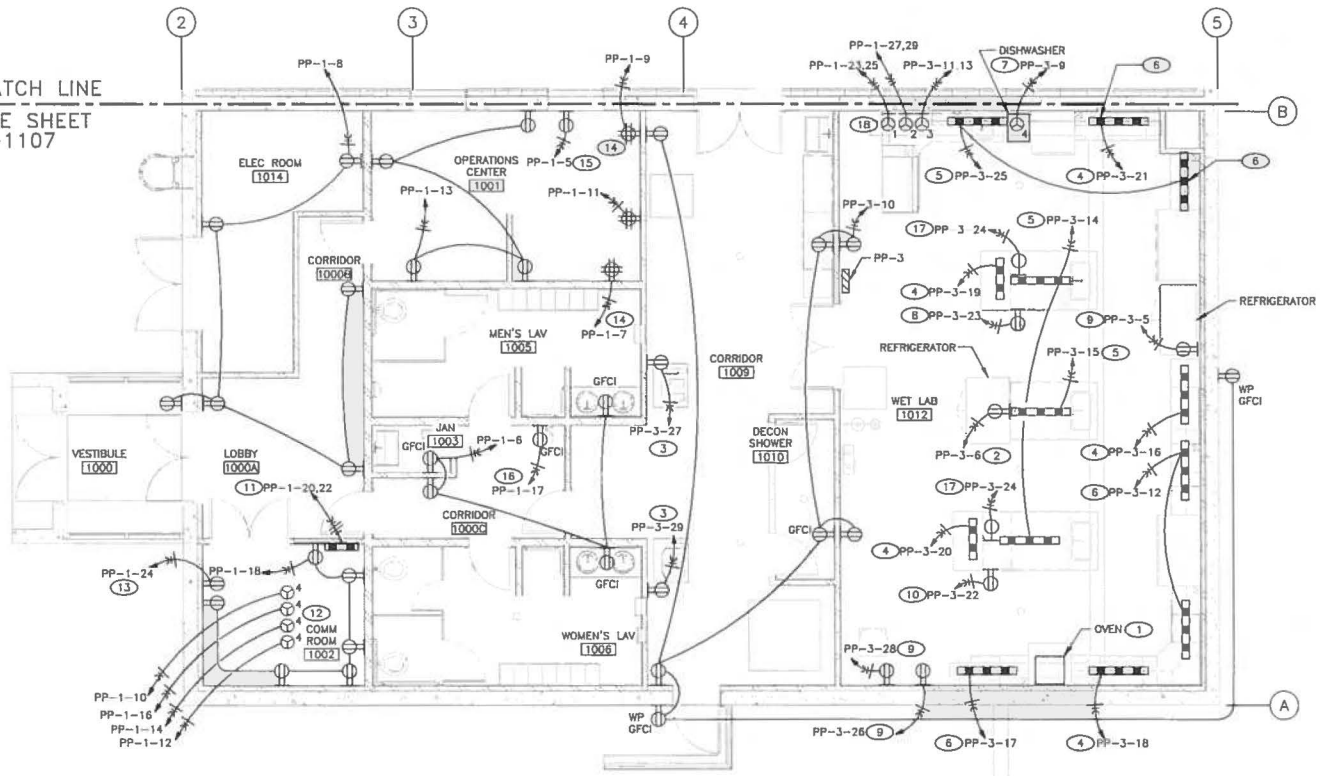

SOUTH RECEPTACLE PLAN–WET LAB, SUPPORT AREA

0' 1' 2' 4' 6' 8'
1/4"=1'-0"

KEYED NOTES

15. DEDICATED RECEPTACLE FOR CONTROL ROOM PRINTER.
16. DEDICATED RECEPTACLE FOR FOR WATER COOLER.
17. DEDICATED CIRCUIT FOR CAM. SEE SHEET E-5102.
18. THREE FLUSH MOUNTED DEDICATED RECEPTACLES FOR MASS SPECTROMETER, COOLING SYSTEM AND VACUUM PUMP.

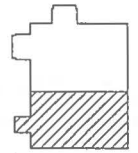

KEY PLAN
SCALE: NONE

GENERAL NOTES

1. IF THIS SHEET IS NOT 24"X36", THEN IT IS A REDUCED SIZE PLOT. USE THE GRAPHIC SCALE ACCORDINGLY.
2. RECEPTACLES ARE TO BE INSTALLED AT 18" ABOVE FINISHED FLOOR UNLESS OTHERWISE NOTED.
3. SEE SPECIFICATION SECTION 12 3100 FOR MOUNTING HEIGHTS AND LOCATIONS OF RECEPTACLES PROVIDED WITH LAB CASEWORK.

KEYED NOTES

1. OVEN POWERED FROM HOOD
2. DEDICATED RECEPTACLE MOUNTED IN CASEWORK FOR REFRIGERATOR.
3. DEDICATED RECEPTACLE FOR PCM.
4. DEDICATED RECEPTACLES MOUNTED IN CASEWORK FOR COMPUTER WORKSTATION.
5. GENERAL PURPOSE GFCI PROTECTED RECEPTACLES MOUNTED IN CASEWORK WITHIN 6 FT OF SINK.
6. GENERAL PURPOSE RECEPTACLES MOUNTED IN CASEWORK.
7. DEDICATED RECEPTACLE FOR UNDERCOUNTER DISHWASHER.
8. DEDICATED RECEPTACLE MOUNTED IN CASEWORK FOR ASPEC PORTABLE VACUUM PUMP.
9. FLUSH MOUNTED DEDICATED RECEPTACLE FOR APPLICANCE OR LAB EQUIPMENT
10. DEDICATED RECEPTACLE MOUNTED IN CASEWORK FOR ION CHROMATOGRAPH.
11. PROVIDE DOUBLE CIRCUIT MULTI-OUTLET ASSEMBLY WITH RECEPTACLES 12" ON CENTER AT 7'-6" AFF
12. INSTALL TWO DEDICATED 120V, 20 AMP TWISTLOCK RECEPTACLES FOR EACH EQUIPMENT RACK. MOUNT ON CABLE TRAY SUPPORT STRUCTURE.
13. DEDICATED RECEPTACLE FOR PAGING AMP.
14. DEDICATED RECEPTACLE FOR CONTROL ROOM WORK STATION. SEE SHEET E-4101 FOR ENLARGED OPERATIONS CENTER PLAN.

NO	DATE	CLASS REV	ADC	DESCRIPTION	DWN	DES	CHKD	SUB	APP

AECOM

RLWTF-UP LOW LEVEL WASTE SUBPROJECT

SOUTH RECEPTACLE PLAN – WET LAB, SUPPORT AREA

BLDG. 230 TA-50

DRAWN	V DAVISON
DESIGN	S MOORE
CHECKED	G MOE
DATE	9/8/14

SUBMITTED: MANNY TARIN
APPROVED FOR RELEASE: ED ARTIGLIA

Los Alamos NATIONAL LABORATORY
PO Box 1663 Los Alamos, New Mexico 87545

SHEET: E-1108
321 OF 434

CLASSIFICATION | REVIEWER | DATE

PROJECT ID: 100761
DRAWING NO: C55864
REV: 0

EUGENE DAVID MOE — NEW MEXICO — 21389 — PROFESSIONAL ENGINEER — 9/8/14

File Location: P:\RLWTF LOW-LEVEL WASTE FACILITY\000 CAD\C55864 MAIN BUILDING\SHEETS\19 ELECTRICAL\55864-E-1108-RD.DWG
Plotted By: MOORE, STEPHEN Plot Date: Monday, May 05, 2014

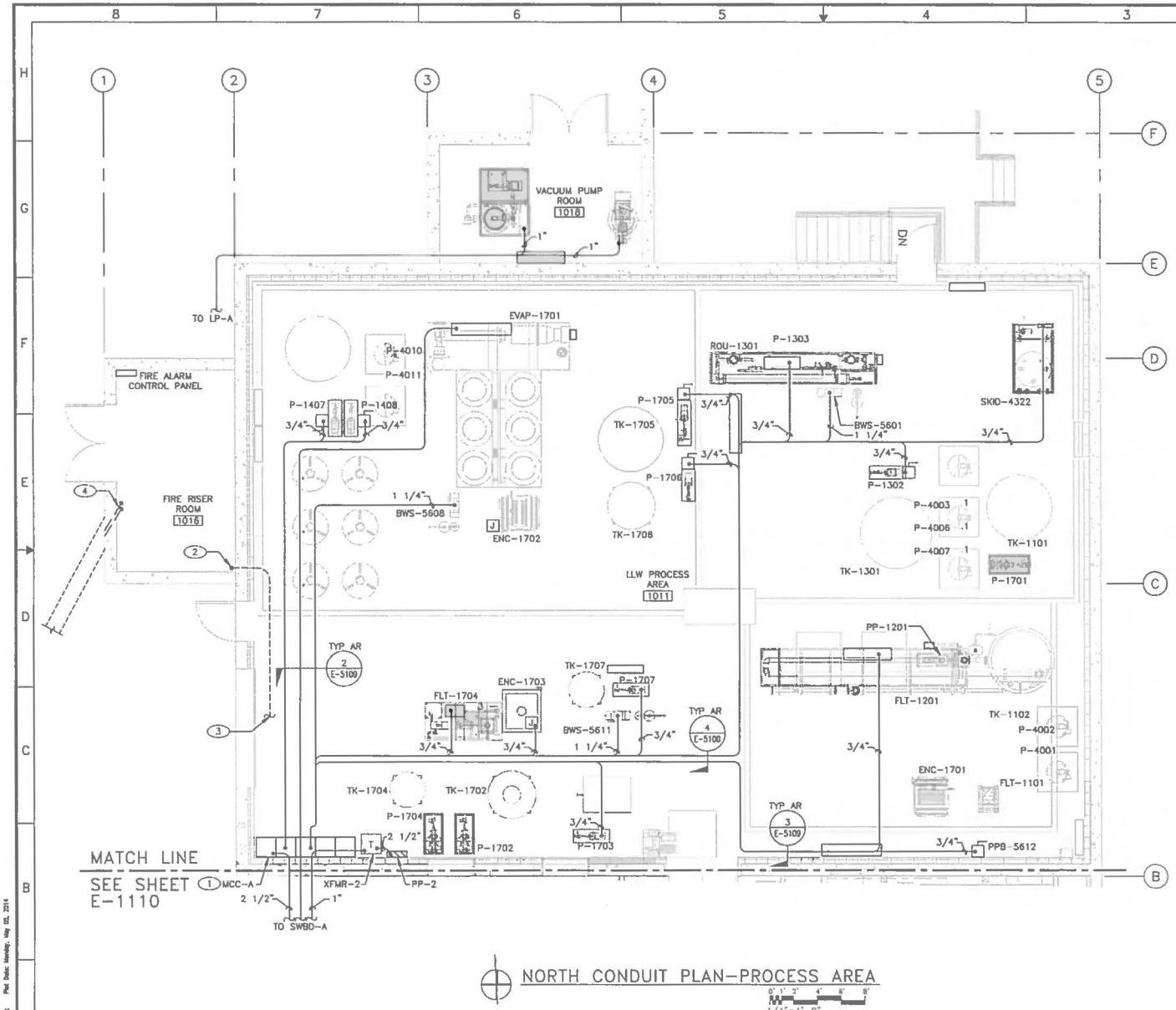

NORTH CONDUIT PLAN–PROCESS AREA

1/4"=1'-0"

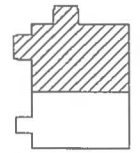

KEY PLAN
SCALE: NONE

GENERAL NOTES

1. IF THIS SHEET IS NOT 24"X36", THEN IT IS A REDUCED SIZE PLOT. USE THE GRAPHIC SCALE ACCORDINGLY.
2. SEE SHEET E-0001 FOR SYMBOLS AND ABBREVIATIONS.
3. DRAWING ONLY SHOWS CONDUIT WHICH PENETRATES THE BUILDING FLOOR, OR SUPPLIES LARGE EQUIPMENT. FOR ALL CONDUIT REQUIRED SEE SHEETS E-7107, E-7108, E-7109 AND E-7110.
4. CONDUIT ROUTING IS DIAGRAMMATIC. EXACT ROUTING IS NOT SHOWN. CONTRACTOR SHALL FIELD ROUTE CONDUIT AND PROVIDE JUNCTION/PULL BOXES AS NECESSARY.
5. CONDUIT STUB-UP CONNECTIONS SHALL BE RIGID STEEL OR INTERMEDIATE METALLIC CONDUIT UNLESS STUB-UP OCCURS WITHIN AN ENCLOSURE OR IS USED FOR GROUND CONDUCTORS ONLY.
6. CONDUIT FLOOR PENETRATION DIMENSIONS ARE APPROXIMATIONS. ALL CONDUIT RISER LOCATIONS SHALL BE COORDINATED WITH FINAL EQUIPMENT LOCATIONS.

KEYED NOTES

(1) CONDUIT SHOWN ROUTED TO SINGLE PENETRATION FOR CLARITY. EACH CONDUIT SHALL PENETRATE TOP OF MCC INTO APPROPRIATE SECTION.

(2) 1" CONDUIT THROUGH FLOOR SLAB FOR FIRE RISER BONDING. CONDUIT TO BE CENTERED 0'-4" WEST OF COLUMN GRID 2 AND 1'-4" NORTH OF COLUMN GRID C.

(3) 1" CONDUIT THROUGH FLOOR SLAB FOR FIRE RISER BONDING IN ROOM 1014. SEE SHEET E-1110 KN 9 FOR CONTINUATION.

(4) (2) 3" CONDUIT THROUGH FLOOR SLAB FOR FUTURE USE FROM DUCT BANK TO XFMR-A. CONDUIT TO BE CENTERED 1'-5" EAST OF COLUMN GRID 1 AND 6'-6" NORTH OF COLUMN GRID C. SEE SHEET E-1000. CAP 6" AFF.

NO	DATE	CLASS REV	ADC	DESCRIPTION	DWN	DES	CHKD	SUB	APP

AECOM

RLWTF-UP LOW LEVEL WASTE SUBPROJECT

CONDUIT PLAN – NORTH

DRAWN	V DAVISON	
DESIGN	S MOORE	
CHECKED	G MOE	
DATE	5/6/14	

BLDG. 230 TA-50

SUBMITTED MANNY TARIN

APPROVED FOR RELEASE ED ARTIGLIA

Los Alamos NATIONAL LABORATORY PO Box 1663 Los Alamos, New Mexico 87545

SHEET E-1109

322 OF 434

CLASSIFICATION | REVIEWER | DATE

PROJECT ID 100761 | DRAWING NO C55864 | REV 0

EUGENE DAVID MOE NEW MEXICO 21388 PROFESSIONAL ENGINEER 6/27/14

12373

File Location: P:\RLWTF LOW-LEVEL WASTE FACILITY\300 CAD\C55864 MAIN BUILDING\SHEETS\18 ELECTRICAL\55864-E-1109-R0.DWG
Plotted By: MOE, STEPHEN Plot Date: Monday, May 05, 2014

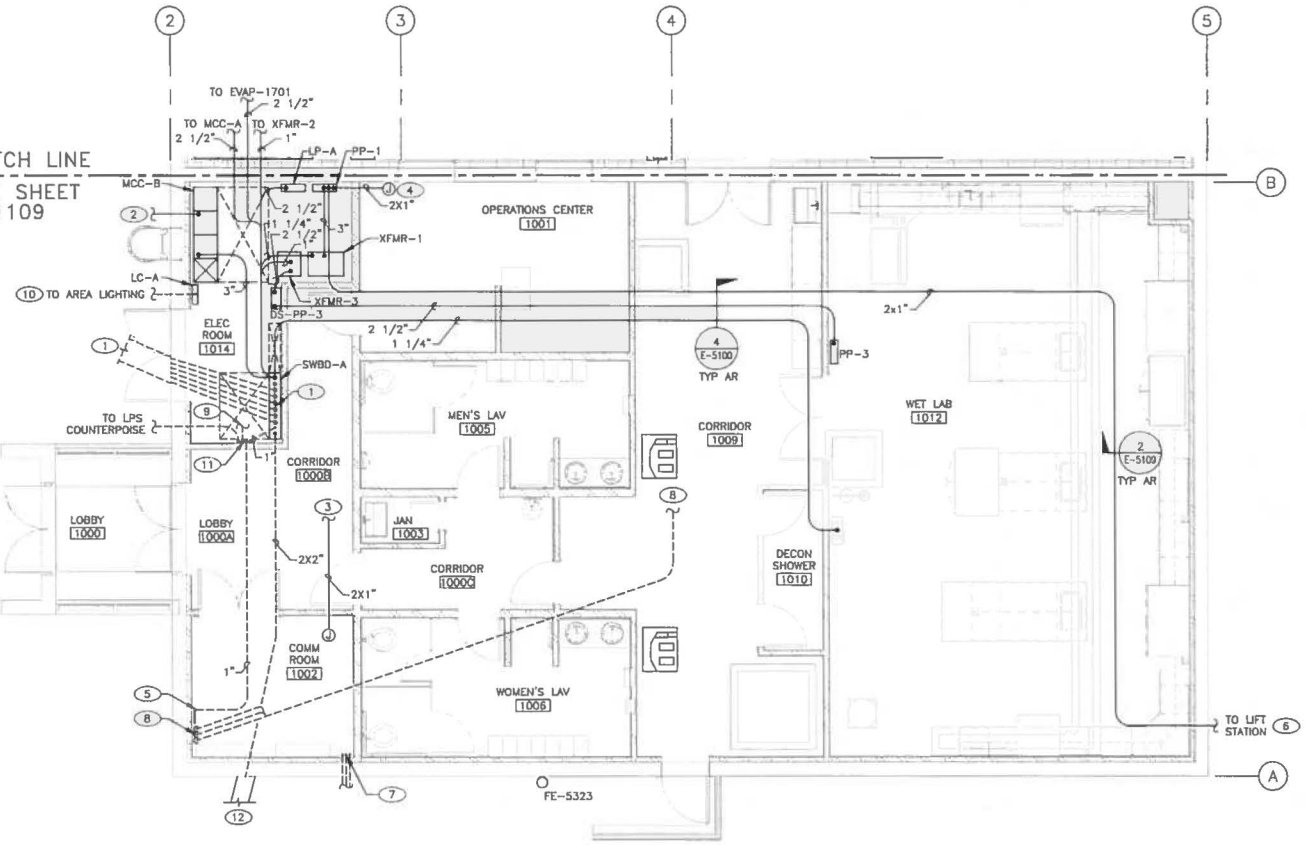

SOUTH CONDUIT PLAN–WET LAB, SUPPORT AREA

0' 1' 2' 4' 6' 8'
1/4"=1'-0"

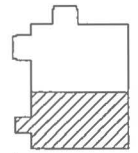

KEY PLAN
SCALE: NONE

GENERAL NOTES

1. IF THIS SHEET IS NOT 24"X36", THEN IT IS A REDUCED SIZE PLOT. USE THE GRAPHIC SCALE ACCORDINGLY.
2. SEE SHEET E-0001 FOR SYMBOLS AND ABBREVIATIONS.
3. DRAWING ONLY SHOWS CONDUIT WHICH PENETRATES THE BUILDING FLOOR, OR SUPPLIES LARGE EQUIPMENT. FOR ALL CONDUIT REQUIRED SEE SHEETS E-7107, E-7108, E-7109 AND E-7110.
4. CONDUIT ROUTING IS DIAGRAMMATIC. EXACT ROUTING IS NOT SHOWN. CONTRACTOR SHALL FIELD ROUTE CONDUIT AND PROVIDE JUNCTION/PULL BOXES AS NECESSARY.
5. SEE SHEET E-5100 FOR TYPICAL MOUNTING DETAILS FOR CONDUIT LARGER THAN 2". ALL OTHER CONDUIT TO BE SUPPORTED PER REQUIREMENTS OF SPEC SECTION 26 0529.
6. CONDUIT STUB-UP CONNECTIONS SHALL BE RIGID STEEL OR INTERMEDIATE METALLIC CONDUIT UNLESS STUB-UP OCCURS WITHIN AN ENCLOSURE OR IS USED FOR GROUND CONDUCTORS ONLY.
7. CONDUIT FLOOR PENETRATION DIMENSIONS ARE APPROXIMATIONS. ALL CONDUIT RISER LOCATIONS SHALL BE COORDINATED WITH FINAL EQUIPMENT LOCATIONS.

KEYED NOTES

(1) (6) 3 1/2" CONDUIT UNDERGROUND THROUGH FLOOR SLAB TO DUCT BANK TO XFMR-A. CONDUITS TO BE CENTERED 7'-3 9/16" EAST OF COLUMN GRID 2 AND 15'-9 3/4" SOUTH OF COLUMN GRID B. SEE DRAWING C55864 SHEET E-1000.

(2) 2" CONDUIT FOR ROOF TOP EQUIPMENT. SEE SHEET E-5109.

(3) (2) 1" CONDUITS TO CARRY ALL POWER CIRCUITS TO RM 1002. REFERENCE POWER PANEL 1 CIRCUITS 10, 12, 14, 16, 18, 20, 22 AND 24.

(4) TWO 1" CONDUITS TO CARRY ALL POWER CIRCUITS TO RM 1001. REFERENCE TO POWER PANEL 1 CIRCUITS 5, 7, 9, 13 AND 15.

(5) 1" CONDUIT THROUGH FLOOR SLAB FOR COMMUNICATIONS GROUND BAR BONDING TO MAIN GROUNDING ELECTRODE GROUND BAR IN ROOM 1014. CONDUIT TO BE CENTERED 1'-8" EAST OF COLUMN GRID 2 AND 4'-8" NORTH OF COLUMN GRID A.

(11) (4) 1" CONDUITS THROUGH FLOOR SLAB FOR GROUNDING AND BONDING CONNECTIONS TO LPS, COMMUNICATION ROOM GROUND BAR, FIRE RISER PIPING AND MAIN SERVICE. CONDUITS TO BE CENETERED 5'-2" EAST OF COLUMN GRID 2 AND 18'-2" SOUTH OF COLUMN GRID B.

(12) (2) 2" CONDUITS THROUGH FLOOR SLAB TO DUCT BANK TO EFFLUENT SAMPLE BUILDING LP-B. SEE SHEET E-1001 FOR CONTINUATION.

(6) (2) 1" CONDUITS FOR BRANCH CIRCUIT TO LIFT STATION AND SPARE. SEE SHEETS E-1000 AND E-1001.

(7) (3) 1" CONDUIT THROUGH FLOOR SLAB FOR PAGING SYSTEM, FCS AND SPARE. CONDUIT TO BE CENTERED 12'-2" EAST OF COLUMN GRID 2 AND 1'-7" NORTH OF COLUMN GRID A. SEE DRAWING C55867 SHEET T-1400.

(8) (3) 4" TELECOMMUNICATION ENTRANCE CONDUIT THROUGH FLOOR SLAB. CONDUIT CENTERED 1'-8" EAST OF COLUMN GRID 2 AND 3'-0" NORTH OF COLUMN GRID A. SEE SHEET E-1000.

(9) 1" CONDUIT THROUGH FLOOR SLAB FOR ROOM 1016 FIRE RISER BONDING. SEE SHEET E-1109 KNJ FOR CONTINUATION.

(10) 1" CONDUIT THROUGH FLOOR SLAB FOR EXTERIOR LIGHTING. SEE SHEET E-1002. CONDUIT 1'-8 3/4" EAST OF COLUMN GRID 2 AND 7'-10" SOUTH OF COLUMN GRID B.

NO	DATE	CLASS REV	ADC	DESCRIPTION	DWN	DES	CHKD	SUB	APP

AECOM

RLWTF-UP LOW LEVEL WASTE SUBPROJECT

CONDUIT PLAN – SOUTH

DRAWN	V DAVISON	
DESIGN	S MOORE	
CHECKED	G MOE	
DATE	5/6/14	

BLDG. 230 TA-50

SUBMITTED MANNY TARIN

APPROVED FOR RELEASE ED ARTIGLIA

Los Alamos NATIONAL LABORATORY PO Box 1663, Los Alamos, New Mexico 87545

SHEET E-1110

323 OF 434

CLASSIFICATION | REVIEWER | DATE

PROJECT ID 100761 | DRAWING NO C55864 | REV 0

File Location: P:\RLWTF LOW-LEVEL WASTE FACILITY\300 CAD\C55864 MAIN BUILDING\SHEETS\18 ELECTRICAL\C55864-E-1110-RS.DWG
Plotted By: MOORE, STEPHEN Plot Date: Monday, May 05, 2014

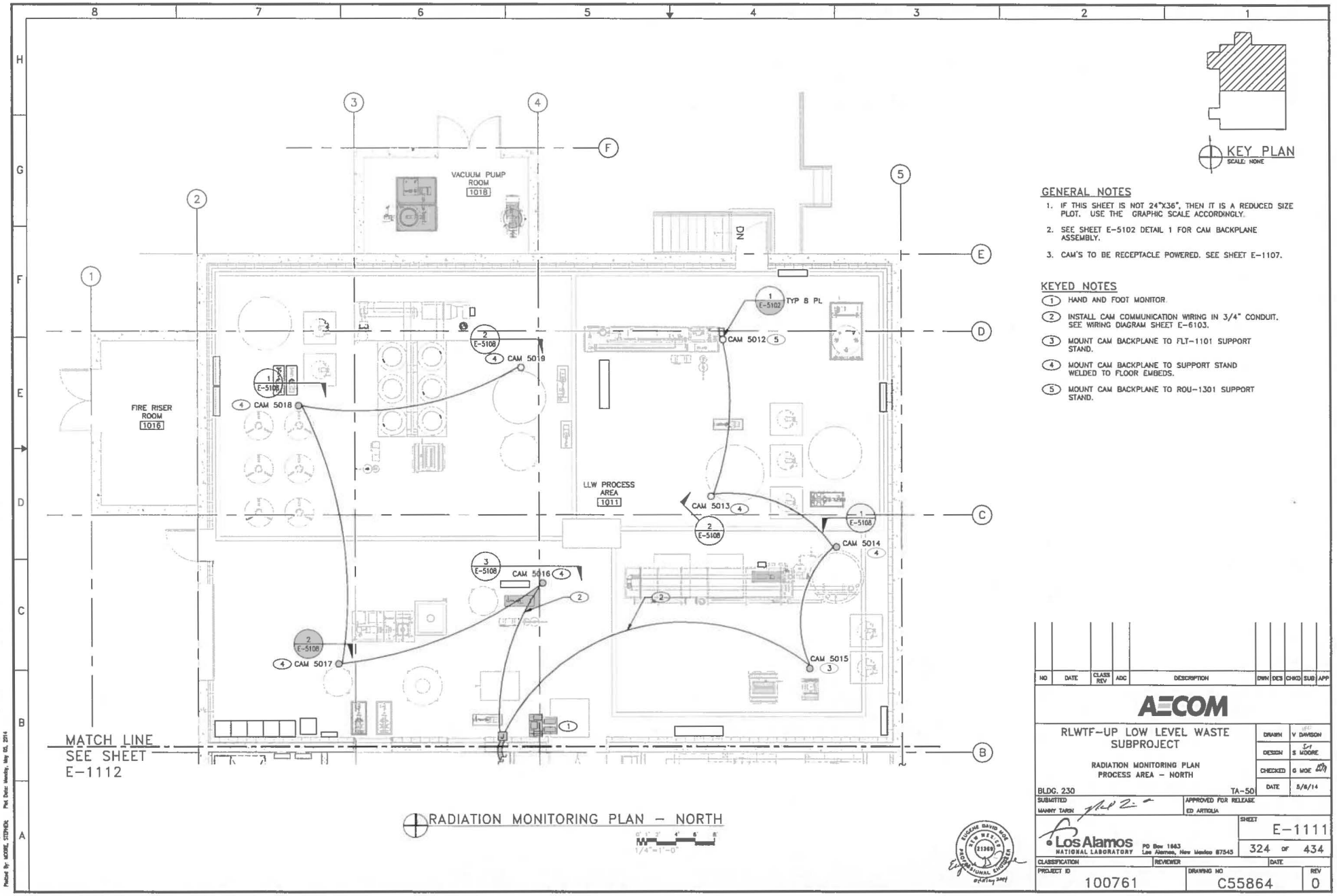

RADIATION MONITORING PLAN – NORTH

SCALE: 1/4"=1'-0"

KEY PLAN
SCALE: NONE

GENERAL NOTES

1. IF THIS SHEET IS NOT 24"X36", THEN IT IS A REDUCED SIZE PLOT. USE THE GRAPHIC SCALE ACCORDINGLY.
2. SEE SHEET E-5102 DETAIL 1 FOR CAM BACKPLANE ASSEMBLY.
3. CAM'S TO BE RECEPTACLE POWERED. SEE SHEET E-1107.

KEYED NOTES

1. HAND AND FOOT MONITOR.
2. INSTALL CAM COMMUNICATION WIRING IN 3/4" CONDUIT. SEE WIRING DIAGRAM SHEET E-6103.
3. MOUNT CAM BACKPLANE TO FLT-1101 SUPPORT STAND.
4. MOUNT CAM BACKPLANE TO SUPPORT STAND WELDED TO FLOOR EMBEDS.
5. MOUNT CAM BACKPLANE TO ROU-1301 SUPPORT STAND.

NO	DATE	CLASS REV	ADC	DESCRIPTION	DWN	DES	CHKD	SUB	APP

AECOM

RLWTF-UP LOW LEVEL WASTE SUBPROJECT

RADIATION MONITORING PLAN
PROCESS AREA – NORTH

BLDG. 230 TA-50

DRAWN	V DAVISON
DESIGN	S MOORE
CHECKED	G MOE
DATE	5/8/14

SUBMITTED: MANNY TARIN
APPROVED FOR RELEASE: ED ARTIOLIA

Los Alamos NATIONAL LABORATORY
PO Box 1663, Los Alamos, New Mexico 87545

SHEET: E-1111
324 OF 434

CLASSIFICATION | REVIEWER | DATE

PROJECT ID: 100761
DRAWING NO: C55864
REV: 0

EUGENE DAVID MOE — NEW MEXICO — 21369 — PROFESSIONAL ENGINEER

File Location: P:\RLWTF LOW LEVEL WASTE FACILITY\300 CAD\C55884 MAIN BUILDING\SHEETS\10 ELECTRICAL\55884-E-1111-R0.DWG
Plotted By: MOORE, STEPHEN Plot Date: Monday, May 05, 2014

12375

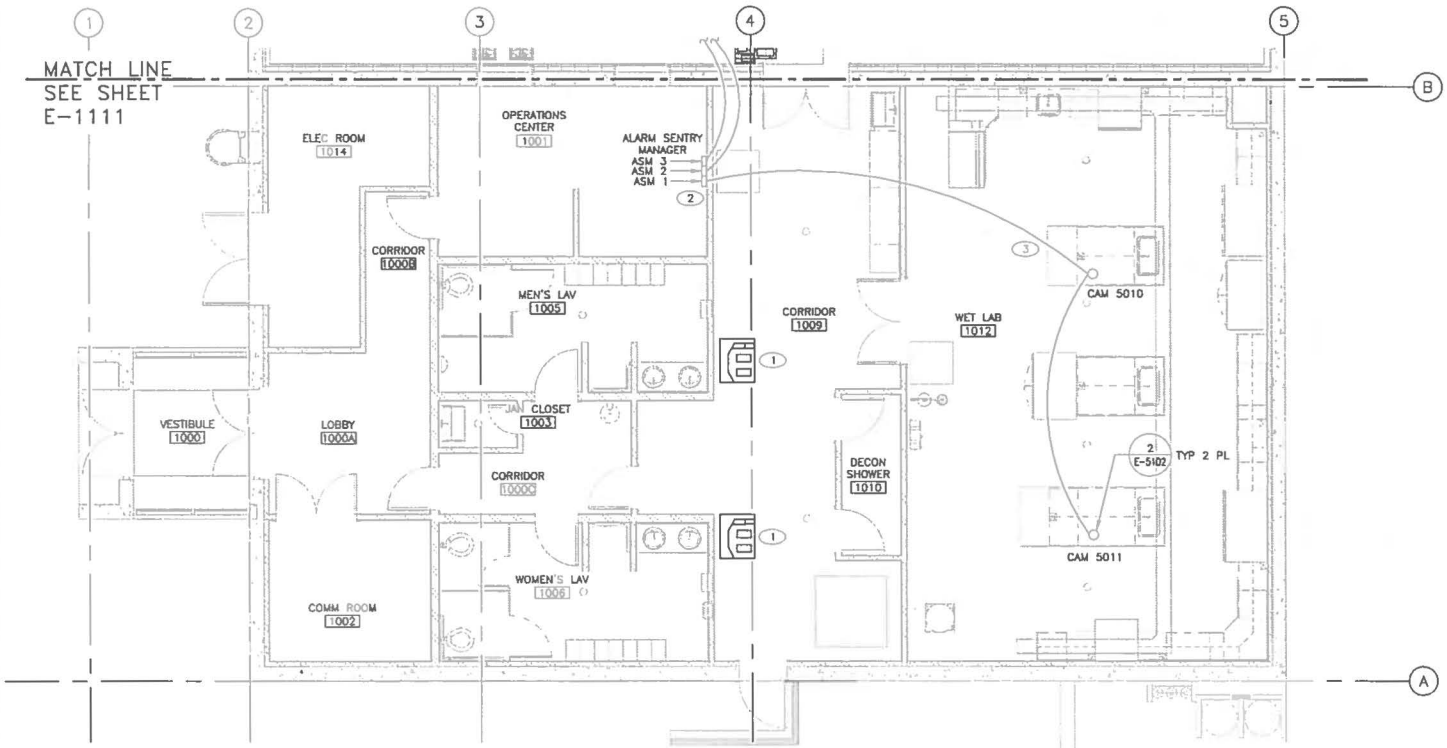

RADIATION MONITORING PLAN – SOUTH

0' 1' 2' 4' 6' 8'
1/4"=1'-0"

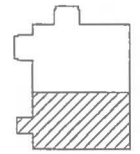

KEY PLAN
SCALE: NONE

GENERAL NOTES

1. IF THIS SHEET IS NOT 24"X36", THEN IT IS A REDUCED SIZE PLOT. USE THE GRAPHIC SCALE ACCORDINGLY.
2. SEE SHEET E-5102 DETAL 2 FOR CAM BACKPLANE ASSEMBLY.
3. CAMS TO BE RECEPTACLE POWERED. SEE SHEET 1108.

KEYED NOTES

1. PERSONAL CONTAMINATION MONITOR.
2. ALARM SENTRY MANAGERS (ASM) CONNECT TO CONTINUOUS AIR MONITOR SAMPLING HEADS (CAM). CAM DISPLAY AND SET-UP FUNCTIONS AVAILABLE FROM ASM. SEE WIRING DIAGRAM SHEET E-6103.
3. INSTALL CAM COMMUNICATIONS WIRING IN 3/4" CONDUIT ABOVE CEILING. TRANSITION FROM CONDUIT TO LAB CASEWORK UMBILICAL AND MOUNT CAM TO CASEWORK SHELF.

NO	DATE	CLASS REV	ADC	DESCRIPTION	DWN	DES	CHKD	SUB	APP

AECOM

RLWTF-UP LOW LEVEL WASTE SUBPROJECT

RADIATION MONITORING PLAN – SOUTH

BLDG. 230 TA-50

DRAWN	V DAVISON
DESIGN	S MOORE
CHECKED	G MOE
DATE	5/8/14

SUBMITTED: MANNY TARIN

APPROVED FOR RELEASE: ED ARTIGLIA

Los Alamos NATIONAL LABORATORY PO Box 1663 Los Alamos, New Mexico 87545

SHEET E-1112

325 OF 434

CLASSIFICATION | REVIEWER | DATE

PROJECT ID 100761 | DRAWING NO C55864 | REV 0

EUGENE DAVID MOE NEW MEXICO 21389 PROFESSIONAL ENGINEER

File Location: P:\RLWTF LOW-LEVEL WASTE FACILITY\500 CAD\C55864 MAIN BUILDING\SHEETS\18 ELECTRICAL\55864-E-1112-RD.DWG
Plotted By: MOORE, STEPHEN Plot Date: Monday, May 05, 2014

: 12376

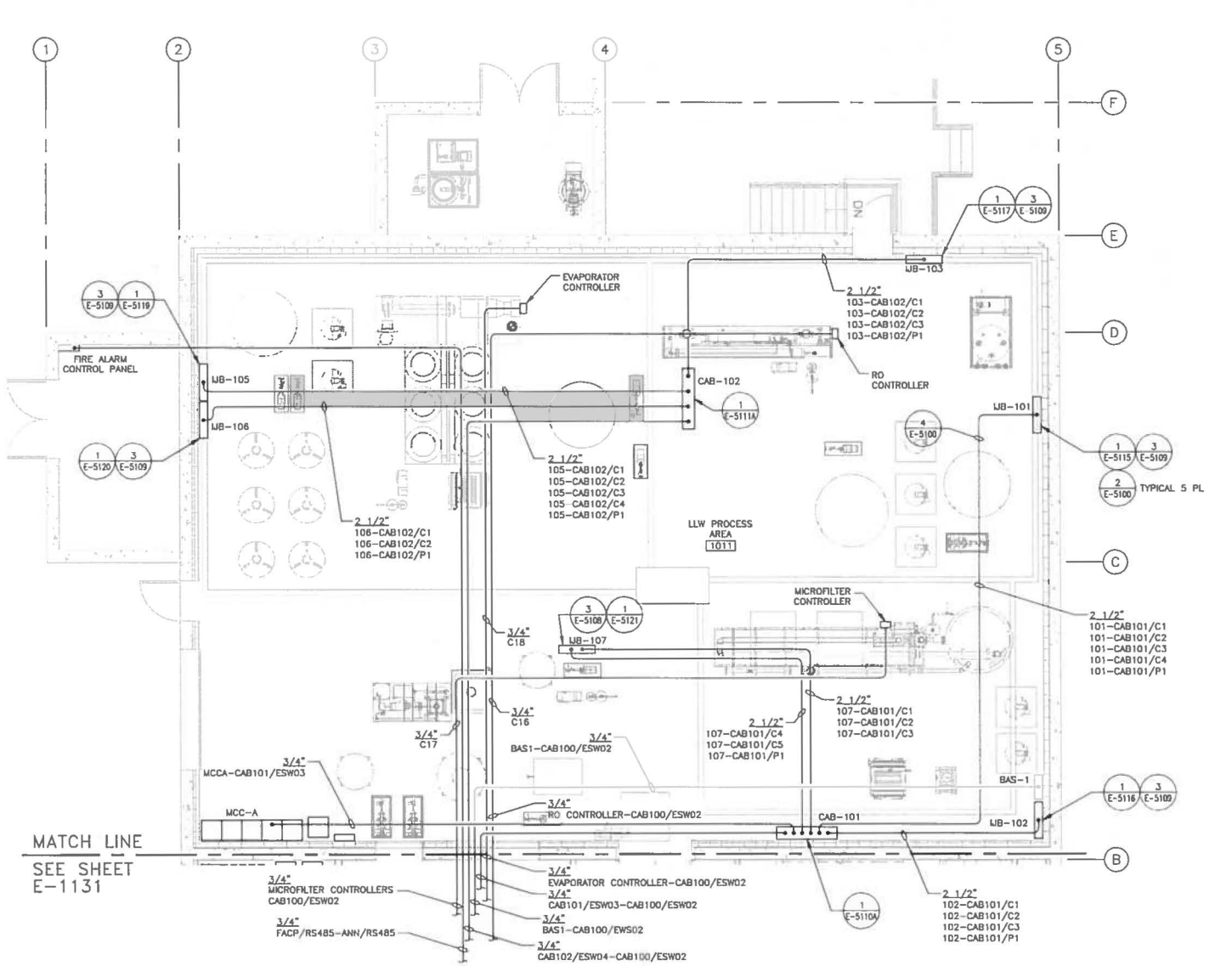

I&C CONDUIT PLAN – PROCESS AREA

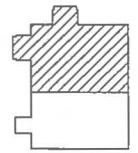

KEY PLAN
SCALE: NONE

GENERAL NOTES

1. IF THIS SHEET IS NOT 24"X36", THEN IT IS A REDUCED SIZE PLOT. USE THE GRAPHIC SCALE ACCORDINGLY.
2. FOR SYMBOLS AND ABBREVIATION, SEE SHEET E-0001.
3. FOR CABLE SCHEDULE SEE E-7120.
4. CONDUIT SHALL BE ROUTED PER THE NEC.
5. CONDUIT ROUTING IS DIAGRAMMATIC AND DOES NOT SHOW EXACT ROUTING. CONTRACTOR SHALL FIELD ROUTE CONDUIT AND PROVIDE JUNCTION/PULL BOXES AS NECESSARY.

NO	DATE	CLASS REV	ADC	DESCRIPTION	DWN	DES	CHKD	SUB	APP

AECOM

RLWTF–UP LOW LEVEL WASTE SUBPROJECT

I&C CONDUIT PLAN – PROCESS AREA

DRAWN	V DAVISON	
DESIGN	S MOORE	
CHECKED	G MOE	
DATE	5/8/14	

BLDG. 230 TA-50

SUBMITTED MANNY TARIN

APPROVED FOR RELEASE ED ARTIOLIA

Los Alamos NATIONAL LABORATORY PO Box 1663 Los Alamos, New Mexico 87545

CLASSIFICATION | REVIEWER | DATE

PROJECT ID	DRAWING NO	REV
100761	C55864	0

SHEET E-1130

326 OF 434

EUGENE DAVID MOE NEW MEXICO 21389 PROFESSIONAL ENGINEER

File Location: P:\RLWTF LOW-LEVEL WASTE FACILITY\300 CAD\C55864 MAIN BUILDING\SHEETS\10 ELECTRICAL\55864-E-1130-R0.DWG
Plotted By: MOORE, STEPHEN Plot Date: Monday, May 05, 2014

E-1130

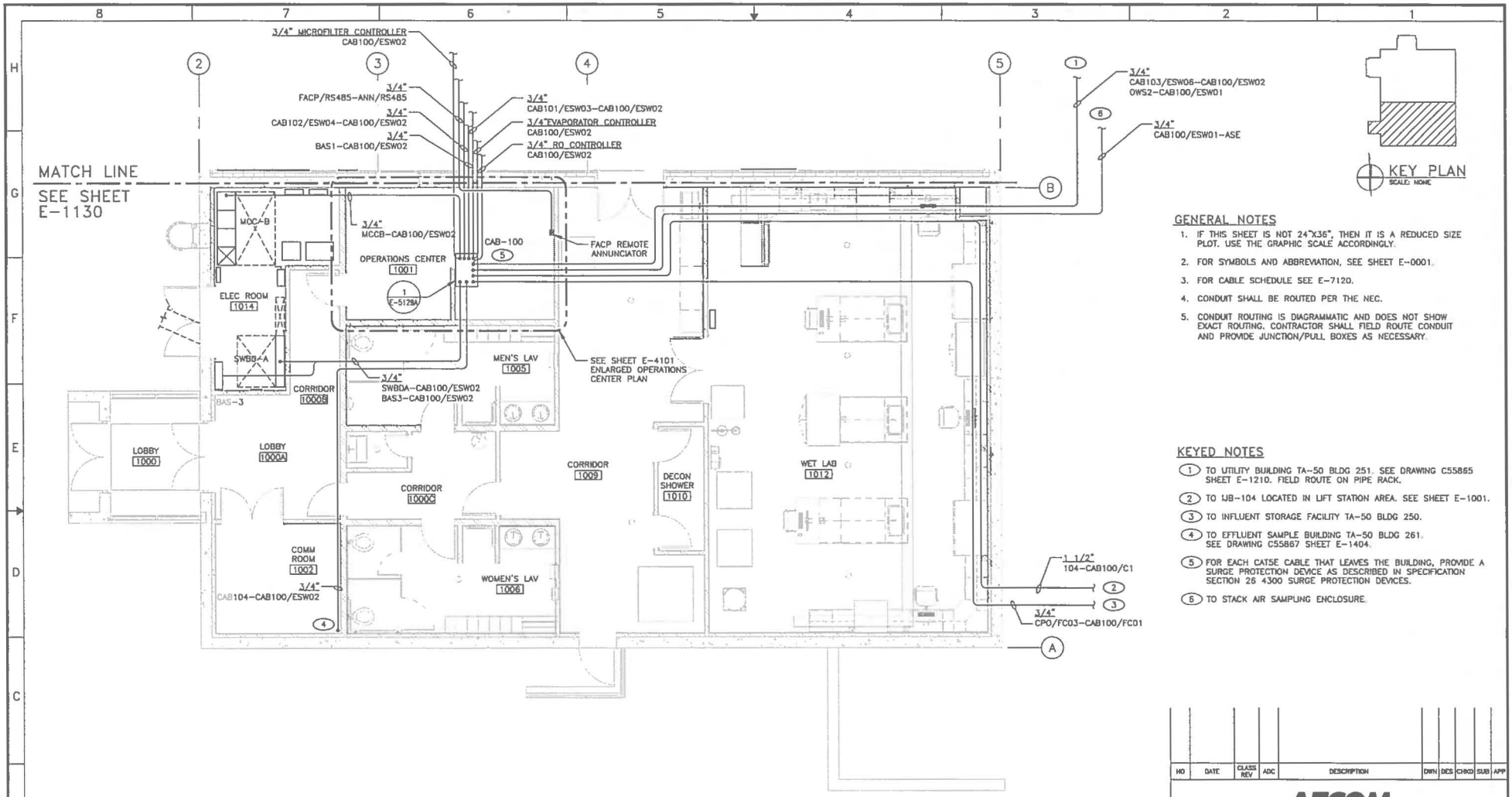

GENERAL NOTES

1. IF THIS SHEET IS NOT 24"X36", THEN IT IS A REDUCED SIZE PLOT. USE THE GRAPHIC SCALE ACCORDINGLY.
2. FOR SYMBOLS AND ABBREVIATION, SEE SHEET E-0001.
3. FOR CABLE SCHEDULE SEE E-7120.
4. CONDUIT SHALL BE ROUTED PER THE NEC.
5. CONDUIT ROUTING IS DIAGRAMMATIC AND DOES NOT SHOW EXACT ROUTING. CONTRACTOR SHALL FIELD ROUTE CONDUIT AND PROVIDE JUNCTION/PULL BOXES AS NECESSARY.

KEYED NOTES

1. TO UTILITY BUILDING TA-50 BLDG 251. SEE DRAWING C55865 SHEET E-1210. FIELD ROUTE ON PIPE RACK.
2. TO IJB-104 LOCATED IN LIFT STATION AREA. SEE SHEET E-1001.
3. TO INFLUENT STORAGE FACILITY TA-50 BLDG 250.
4. TO EFFLUENT SAMPLE BUILDING TA-50 BLDG 261. SEE DRAWING C55867 SHEET E-1404.
5. FOR EACH CAT5E CABLE THAT LEAVES THE BUILDING, PROVIDE A SURGE PROTECTION DEVICE AS DESCRIBED IN SPECIFICATION SECTION 26 4300 SURGE PROTECTION DEVICES.
6. TO STACK AIR SAMPLING ENCLOSURE.

I&C CONDUIT PLAN – WET LAB, SUPPORT AREA

1/4"=1'-0"

NO	DATE	CLASS REV	ADC	DESCRIPTION	DWN	DES	CHKD	SUB	APP

AECOM

RLWTF-UP LOW LEVEL WASTE SUBPROJECT

I&C CONDUIT PLAN – WET LAB, SUPPORT AREA

BLDG. 230 TA-50

DRAWN	V DAVISON		
DESIGN	S MOORE		
CHECKED	G MOE		
DATE	5/8/14		

SUBMITTED MANNY TARIN

APPROVED FOR RELEASE ED ARTIGLIA

Los Alamos NATIONAL LABORATORY PO Box 1663 Los Alamos, New Mexico 87545

SHEET E-1131

327 OF 434

CLASSIFICATION | REVIEWER | DATE

PROJECT ID 100761 | DRAWING NO C55864 | REV 0

EUGENE DAVID MOE 21389 NEW MEXICO PROFESSIONAL ENGINEER

File Location: P:\FLUFTF LOW-LEVEL WASTE FACILITY\500 CAD\C55864 MAIN BUILDING\SHEETS\10 ELECTRICAL\55864-E-1131-RD.DWG
Plotted By: MOORE, STEPHEN Plot Date: Monday, May 05, 2014

12378

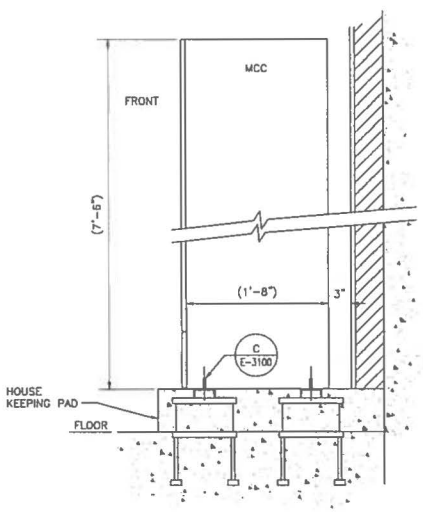

A E-1101 MCC-A FLOOR MOUNTING SECTION
SCALE: NONE

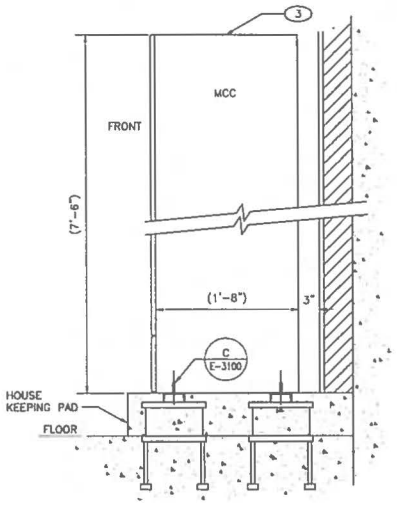

B E-4100 MCC-B FLOOR MOUNTING SECTION
SCALE: NONE

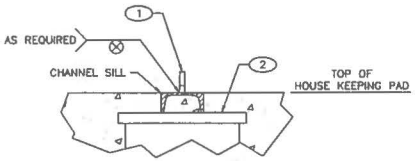

SECTION VIEW

C E-3100 SILL CHANNEL EMBEDMENT SECTION
3"=1'-0"

GENERAL NOTES

1. IF THIS SHEET IS NOT 24"X36", THEN IT IS A REDUCED SIZE PLOT. USE THE GRAPHIC SCALE ACCORDINGLY.
2. EQUIPMENT SHALL BE INSTALLED PER MANUFACTURER'S INSTRUCTIONS USING THE APPROPRIATE HARDWARE.

KEYED NOTES

(1) ATTACH MOTOR CONTROL CENTER TO EMBED PLATES USING WELD STUDS OF MANUFACTURER RECOMMENDED SIZE IN MANUFACTURER RECOMMENDED LOCATIONS. REFER TO FACTORY SUPPLIED DRAWINGS TO DETERMINE APPROPRIATE ANCHOR LOCATIONS.

(2) EMBEDMENT PLATES AND CHANNEL SILL INSTALLED WITH CONCRETE HOUSEKEEPING PADS. SEE SHEET Q-5103.

(3) SEE SHEET E-5100 DETAIL 5 FOR CONDUIT SUPPORT REQUIREMENTS.

NO	DATE	CLASS REV	ADC	DESCRIPTION	DWN	DES	CHKD	SUB	APP

AECOM

RLWTF-UP LOW LEVEL WASTE SUBPROJECT

MCC SECTIONS

DRAWN	V DAVISON	UPD
DESIGN	S MOORE	Sm
CHECKED	G MOE	GM
DATE	5/8/14	

BLDG. 230 TA-50

SUBMITTED MANNY TARIN — APPROVED FOR RELEASE ED ARTIGLIA

Los Alamos NATIONAL LABORATORY PO Box 1663 Los Alamos, New Mexico 87545

SHEET E-3100

328 OF 434

CLASSIFICATION | REVIEWER | DATE

PROJECT ID 100761 | DRAWING NO C55864 | REV 0

EUGENE DAVID MOE NEW MEXICO 21368 PROFESSIONAL ENGINEER 05/07/2014

File Location: P:\PLWTF LOW-LEVEL WASTE FACILITY\300 CAD\C55864 MAIN BUILDING\SHEETS\10 ELECTRICAL\55864-E-3100-RD.DWG
Plotted By: MOORE, STEPHEN Plot Date: Monday, May 05, 2014

6279

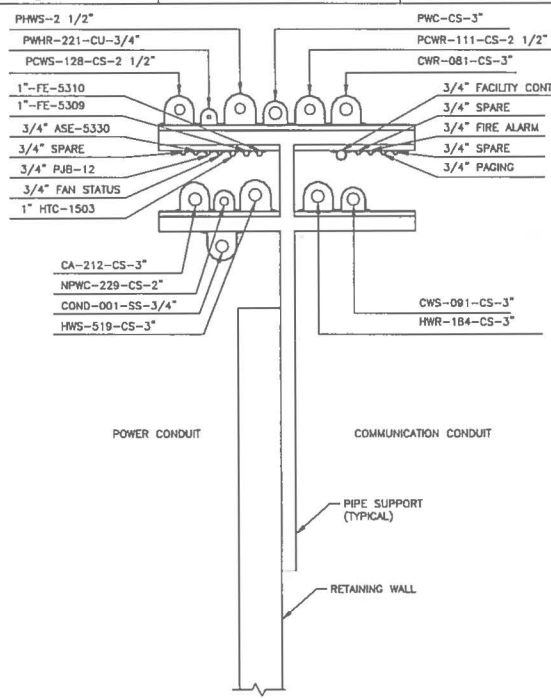

A E-4000 ELECTRICAL SECTION – NORTH

3/4"=1'-0"

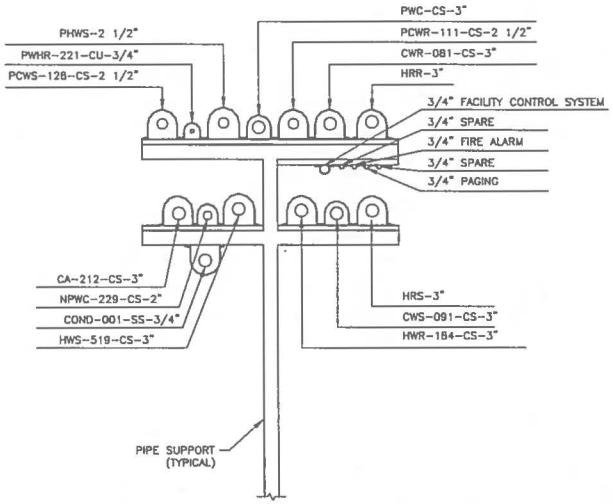

B E-4000 ELECTRICAL SECTION – NORTH

3/4"=1'-0"

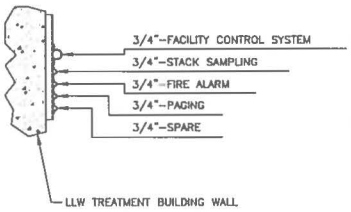

C E-4001 C E-1004 ELECTRICAL SECTION – NORTH

3/4"=1'-0"

GENERAL NOTES

1. IF THIS SHEET IS NOT 24"x 36", THEN IT IS A REDUCED SIZE PLOT. USE GRAPHIC SCALE ACCORDINGLY.
2. PIPING IN SECTION VIEW SHOWN WITHOUT INSULATION.

NO	DATE	CLASS REV	ADC	DESCRIPTION	DWN	DES	CHKD	SUB	APP

AECOM

RLWTF-UP LOW LEVEL WASTE SUBPROJECT

ELECTRICAL SECTIONS

DRAWN	V DAVISON
DESIGN	S MOORE
CHECKED	G MOE
DATE	5/8/14

BLDG. 230 TA-50

SUBMITTED MANNY TARIN

APPROVED FOR RELEASE ED ARTIGLIA

Los Alamos NATIONAL LABORATORY PO Box 1663 Los Alamos, New Mexico 87545

SHEET E-3101

329 OF 434

CLASSIFICATION REVIEWER DATE

PROJECT ID 100761 DRAWING NO C55864 REV 0

EUGENE DAVID MOE NEW MEXICO 21368 PROFESSIONAL ENGINEER

File Location: P:\RLWTF LOW-LEVEL WASTE FACILITY\500 CAD\C55864 MAIN BUILDING\SHEETS\10 ELECTRICAL\55864-E-3101-R0.DWG
Plotted By: MOORE, STEPHEN Plot Date: Monday, May 05, 2014

08621

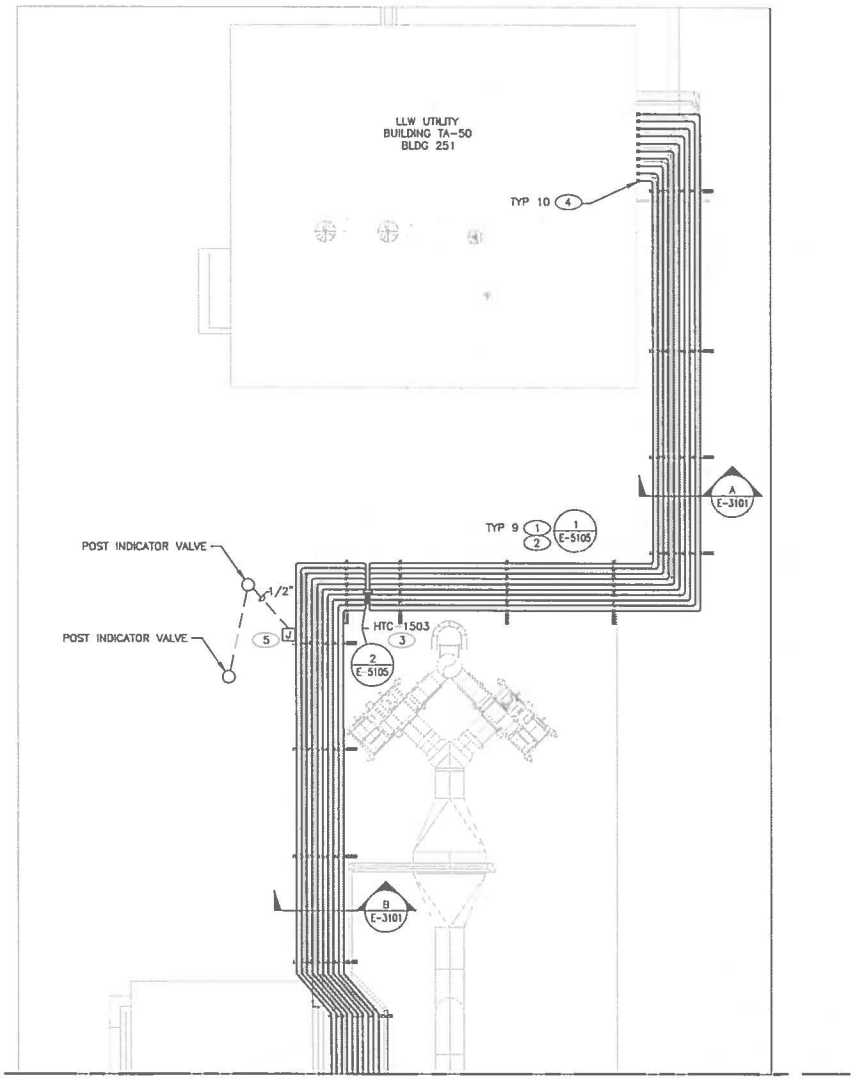

MATCH LINE
SEE SHEET
E-4001

ENLARGED HEAT TRACE AND CONDUIT PLAN – NORTH

3/16"=1'-0"

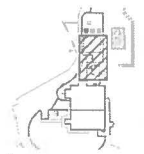

KEY PLAN
SCALE: NONE

GENERAL NOTES

1. IF THIS SHEET IS NOT 24"x 36", THEN IT IS A REDUCED SIZE PLOT. USE GRAPHIC SCALE ACCORDINGLY.
2. SEE SHEET E-5105 DETAIL 1 FOR INSTALLATION OF HEAT TRACE POWER CONNECTION KIT AND THERMOSTAT.

KEYED NOTES

1. INSTALL HEAT TRACE POWER CONNECTION KIT AT THE APPROXIMATE MIDPOINT OF THE PIPING RUN. ROUTE HEAT TRACE ENTIRE LENGTH OF PIPE IN BOTH DIRECTIONS. INSTALL TERMINATORS AT EACH END WHERE IT ENTERS BLDG.
2. CONNECT POWER CONNECTION KIT TO HEAT TRACE ENCLOSURE USING #12 AWG CONDUCTORS IN 3/4" CONDUIT. SEE SHEET E-5105 FOR CIRCUIT DESIGNATORS.
3. MOUNT HEAT TRACE CABINET (HTC-1503) TO WALL BENEATH UTILITY PIPE RACK AT CENTER 48" ABOVE GRADE. SEE SHEET E-1001.
4. HEAT TRACE END TERMINATION KIT.
5. INSTALL JUNCTION BOX IN 3/4" FIRE ALARM CONDUIT MOUNTED ON PIPE RACK. INSTALL 1/2" DOWN CONDUIT, TRANSITION TO UNDERGROUND AND ROUTE TO FIRE SPRINKLER SYSTEM POST INDICATOR VALVES.

NO	DATE	CLASS REV	ADC	DESCRIPTION	DWN	DES	CHKD	SUB	APP

AECOM

RLWTF-UP LOW LEVEL WASTE SUBPROJECT

ENLARGED HEAT TRACE AND CONDUIT PLAN – NORTH

BLDG. 230 TA-50

DRAWN	V DAVISON
DESIGN	S MOORE
CHECKED	G MOE
DATE	5/8/14

SUBMITTED: MANNY TARIN

APPROVED FOR RELEASE: ED ARTIGLIA

Los Alamos NATIONAL LABORATORY PO Box 1663 Los Alamos, New Mexico 87545

SHEET E-4000

330 OF 434

CLASSIFICATION | REVIEWER | DATE

PROJECT ID 100761 | DRAWING NO C55864 | REV 0

ENGINE DAVID MOE NEW MEXICO 21389 PROFESSIONAL ENGINEER

File Location: P:\RLWTF LOW-LEVEL WASTE FACILITY\500 CAD\C55864 MAIN BUILDING\SHEETS\16 ELECTRICAL\55864-E-4000-R0.DWG
Plotted By: MOORE, STEPHEN Plot Date: Monday, May 05, 2014

12381

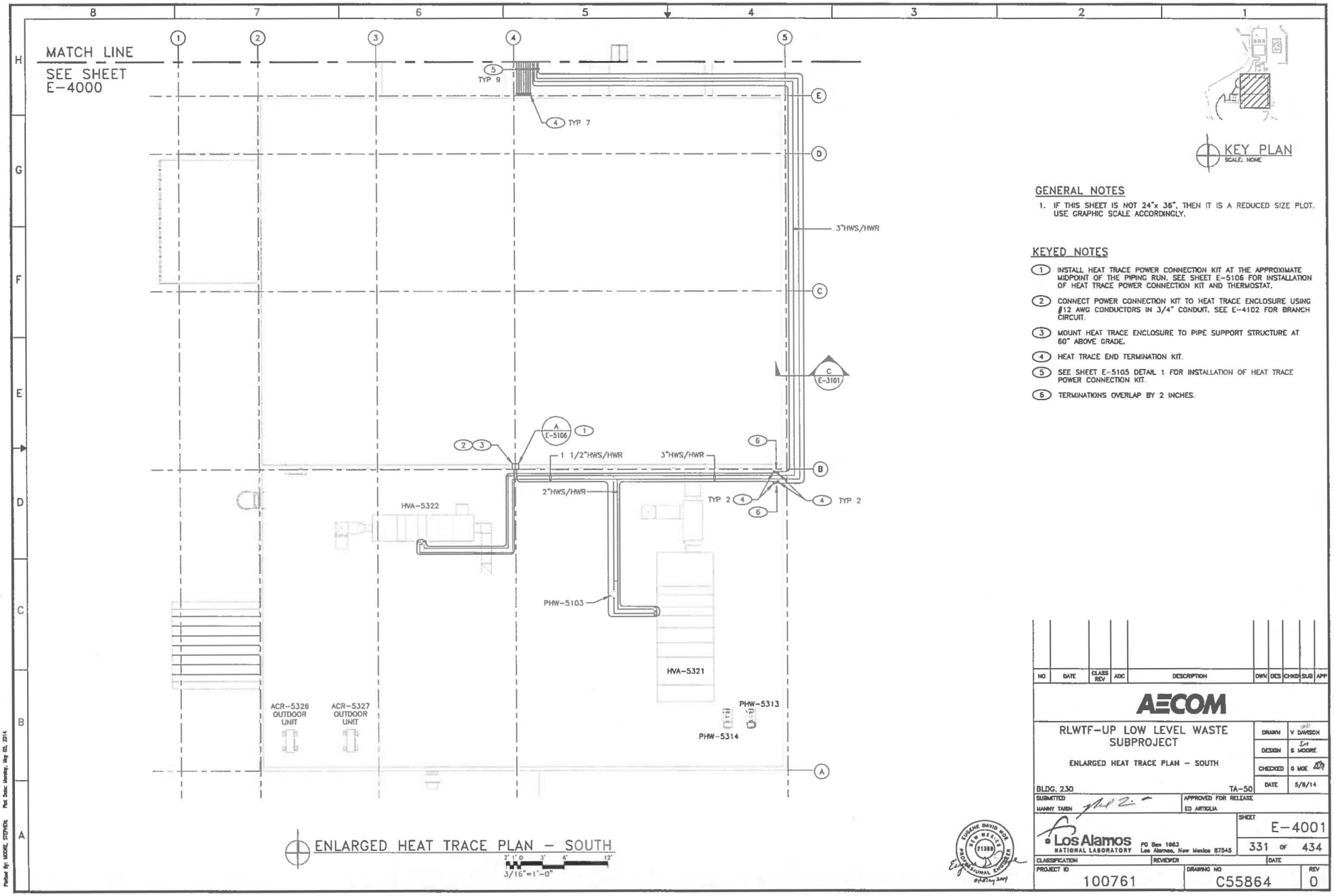

ENLARGED HEAT TRACE PLAN – SOUTH

3/16"=1'-0"

KEY PLAN
SCALE: NONE

GENERAL NOTES

1. IF THIS SHEET IS NOT 24"x 36", THEN IT IS A REDUCED SIZE PLOT. USE GRAPHIC SCALE ACCORDINGLY.

KEYED NOTES

1. INSTALL HEAT TRACE POWER CONNECTION KIT AT THE APPROXIMATE MIDPOINT OF THE PIPING RUN. SEE SHEET E-5106 FOR INSTALLATION OF HEAT TRACE POWER CONNECTION KIT AND THERMOSTAT.
2. CONNECT POWER CONNECTION KIT TO HEAT TRACE ENCLOSURE USING #12 AWG CONDUCTORS IN 3/4" CONDUIT. SEE E-4102 FOR BRANCH CIRCUIT.
3. MOUNT HEAT TRACE ENCLOSURE TO PIPE SUPPORT STRUCTURE AT 60" ABOVE GRADE.
4. HEAT TRACE END TERMINATION KIT.
5. SEE SHEET E-5105 DETAIL 1 FOR INSTALLATION OF HEAT TRACE POWER CONNECTION KIT.
6. TERMINATIONS OVERLAP BY 2 INCHES.

NO	DATE	CLASS REV	ADC	DESCRIPTION	DWN	DES	CHKD	SUB	APP

AECOM

RLWTF-UP LOW LEVEL WASTE SUBPROJECT

ENLARGED HEAT TRACE PLAN – SOUTH

BLDG. 230 TA-50

DRAWN	V DAWSON
DESIGN	S MOORE
CHECKED	G MOE
DATE	5/6/14

SUBMITTED: MANNY TARIN

APPROVED FOR RELEASE: ED ARTIGLIA

Los Alamos NATIONAL LABORATORY PO Box 1663 Los Alamos, New Mexico 87545

SHEET E-4001

331 OF 434

CLASSIFICATION | REVIEWER | DATE

PROJECT ID 100761 | DRAWING NO C55864 | REV 0

EUGENE DAVID MOE NEW MEXICO 21389 PROFESSIONAL ENGINEER

File Location: P:\RLWTF LOW-LEVEL WASTE FACILITY\500 DAYS\C55864 MAIN BUILDING\SHEETS\18 ELECTRICAL\55864-E-4001-R0.DWG
Plotted By: MOORE, STEPHEN Plot Date: Monday, May 05, 2014

12382

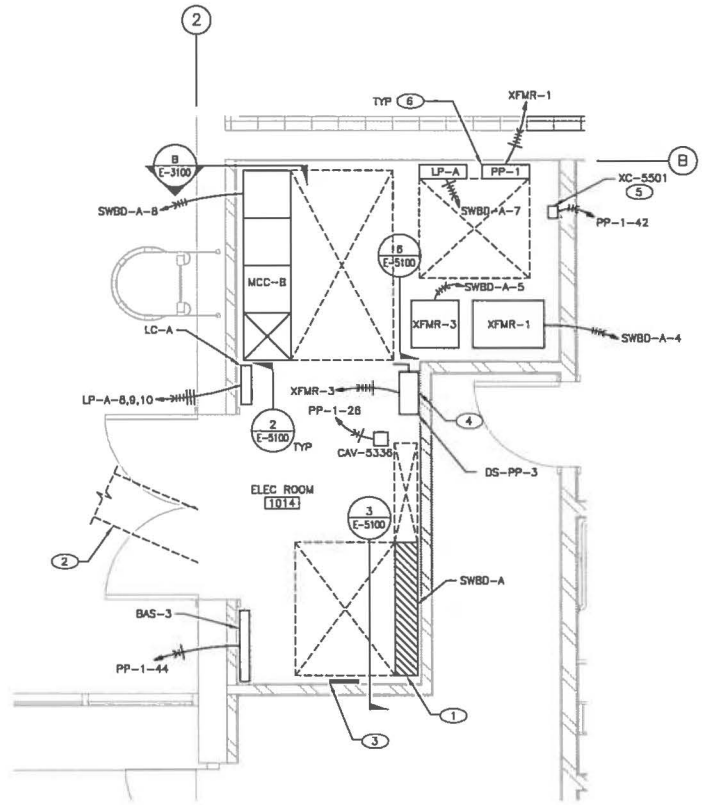

1 E-1102 ENLARGED ELECTRICAL ROOM PLAN

1/2"=1'-0"

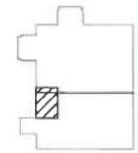

KEY PLAN
SCALE: NONE

GENERAL NOTES

1. IF THIS SHEET IS NOT 24" X 36" THEN IT IS A REDUCED SIZE PLOT. USE GRAPHIC SCALE ACCORDINGLY.
2. FOR SYMBOL AND ABBREVIATIONS SEE SHEET E-0001.
3. FOR ELECTRICAL ONE-LINE DIAGRAM SEE SHEET E-6001.

KEYED NOTES

1. SWBD-A IS LLW SERVICE PANEL.
2. UNDERGROUND DUCT BANK TO XFMR-A. SEE SHEET E-1001.
3. MAIN GROUNDING ELECTRODE GROUND BAR. SEE SHEET E-6102.
4. FUSED DISCONNECT FOR PANELBOARD PP-3 IN WET LAB. SEE SHEET E-1102.
5. FLOOR DRAIN SOLENOID CONTROL PANEL. SEE SHEET E-6104.
6. PANELS MOUNTED DIRECTLY ON UNFINISHED CONCRETE WALL TO BE SUPPORTED USING POST INSTALLED ANCHORS PER SPECIFICATION 03 1534. HILTI KWIK BOLT TZ 1/2"ø x hnom = 3 5/8" ANCHORS.

NO	DATE	CLASS REV	ADC	DESCRIPTION	DWN	DES	CHKD	SUB	APP
1	7/7/14	U		REVISED GENERAL NOTE 7					

AECOM

RLWTF-UP LOW LEVEL WASTE SUBPROJECT

ENLARGED ELECTRICAL ROOM PLAN

BLDG. 230 TA-50

DRAWN	V DAVISON
DESIGN	S MOORE
CHECKED	G MOE
DATE	5/8/14

SUBMITTED: MANNY TARIN

APPROVED FOR RELEASE: ED ARTIGLIA

Los Alamos NATIONAL LABORATORY PO Box 1663 Los Alamos, New Mexico 87545

SHEET E-4100

332 OF 434

CLASSIFICATION | REVIEWER | DATE

PROJECT ID 100761 | DRAWING NO C55864 | REV 1

M. EVELYN ROGERS NEW MEXICO 22184 PROFESSIONAL ENGINEER 7-7-14

File Location: W:\RLWTF LOW-LEVEL WASTE FACILITY\500 CAD\C55864 MAIN BUILDING\SHEETS\18 ELECTRICAL\55864-E-4100-R1.DWG
Plotted By: BROERMAN, DARLENE; Plot Date: Thursday, July 03, 2014

: 12383

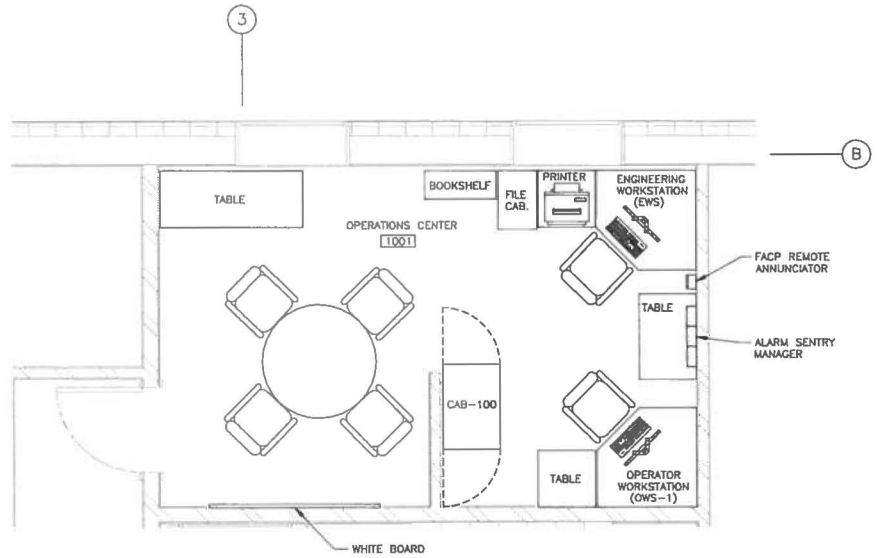

ENLARGED OPERATIONS CENTER PLAN

1' 6" 0 1' 2' 3'

1/2"=1'-0"

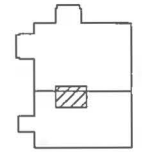

KEY PLAN

SCALE: NONE

GENERAL NOTES

1. IF THIS SHEET IS NOT 24" X 36" THEN IT IS A REDUCED SIZE PLOT. USE GRAPHIC SCALE ACCORDINGLY.
2. ARRANGEMENT SHOWN FOR INFORMATION. OFFICE FURNITURE IS GFE.

NO	DATE	CLASS REV	ADC	DESCRIPTION	DWN	DES	CHKD	SUB	APP

AECOM

RLWTF-UP LOW LEVEL WASTE SUBPROJECT

ENLARGED OPERATIONS CENTER PLAN

BLDG. 230 TA-50

DRAWN	V DAVISON
DESIGN	S MOORE
CHECKED	G MOE
DATE	5/8/14

SUBMITTED MANNY TARIN

APPROVED FOR RELEASE ED ARTIGLIA

Los Alamos NATIONAL LABORATORY PO Box 1663 Los Alamos, New Mexico 87545

SHEET E-4101

333 OF 434

CLASSIFICATION | REVIEWER | DATE

PROJECT ID 100761

DRAWING NO C55864

REV 0

EUGENE DAVID MOE NEW MEXICO (21389) PROFESSIONAL ENGINEER

File Location: P:\RLWTF LOW-LEVEL WASTE FACILITY\500 CAD\C55864 MAIN BUILDING\SHEETS\10 ELECTRICAL\55864-E-4101-R0.DWG
Plotted By: MOORE, STEPHEN Plot Date: Monday, May 05, 2014

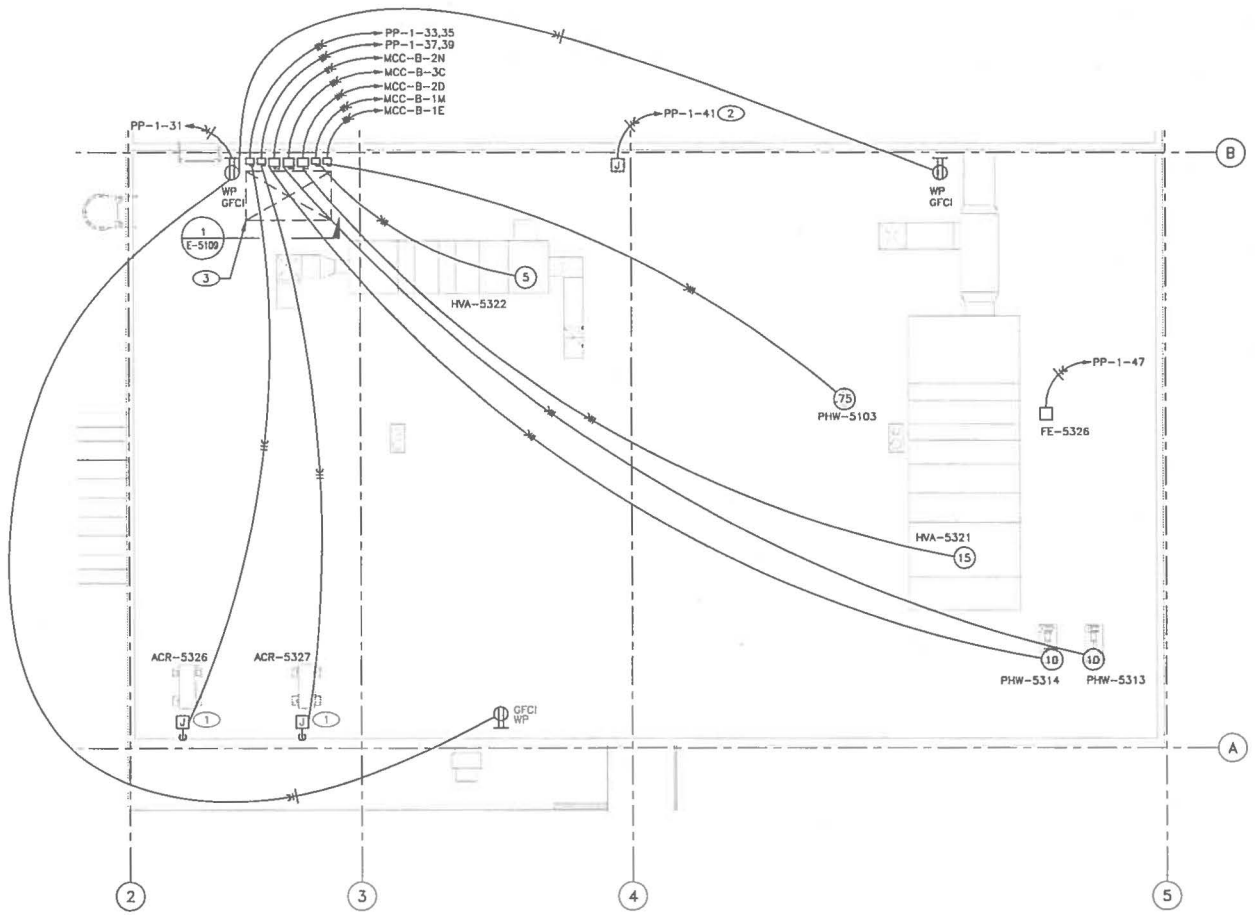

ENLARGED ROOF PLAN – SOUTH

0' 1' 2' 4' 6' 8'
1/4"=1'-0"

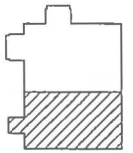

KEY PLAN
SCALE: NONE

GENERAL NOTES

1. IF THIS SHEET IS NOT 24"x 36", THEN IT IS A REDUCED SIZE PLOT. USE GRAPHIC SCALE ACCORDINGLY.
2. FOR SYMBOLS AND ABBREVIATIONS, SEE SHEET E-0001.

KEYED NOTES

(1) INSTALL JUNCTION BOX. SPLICE CONDUCTORS FOR ACR INSIDE UNIT IN ROOM 1002. SEE SHEET E-1102.

(2) HEAT TRACE BRANCH CIRCUIT. SEE HEAT TRACE PLAN SHEET 4001.

(3) MAINTAIN REQUIRED WORKING CLEARANCE IN FRONT OF ELECTRICAL DISCONNECTS.

NO	DATE	CLASS REV	ADC	DESCRIPTION	DWN	DES	CHKD	SUB	APP

AECOM

RLWTF-UP LOW LEVEL WASTE SUBPROJECT

ENLARGED ROOF PLAN – SOUTH

DRAWN	V DAVISON
DESIGN	S MOORE
CHECKED	G MOE
DATE	5/8/14

BLDG. 230 TA-50

SUBMITTED MANNY TARIN

APPROVED FOR RELEASE ED ARTIGLIA

Los Alamos NATIONAL LABORATORY PO Box 1663 Los Alamos, New Mexico 87545

SHEET E-4102

334 OF 434

CLASSIFICATION REVIEWER DATE

PROJECT ID 100761

DRAWING NO C55864

REV 0

EUGENE DAVID MOE NEW MEXICO 21389 REGISTERED PROFESSIONAL ENGINEER 5/8/14

58321 : 12385

File Location: P:\RLWTF LOW-LEVEL WASTE FACILITY\300 CAD\C55864 MAIN BUILDING\SHEETS\10 ELECTRICAL\55864-E-4102-RO.DWG
Plotted By: MOORE, STEPHEN Plot Date: Monday, May 05, 2014

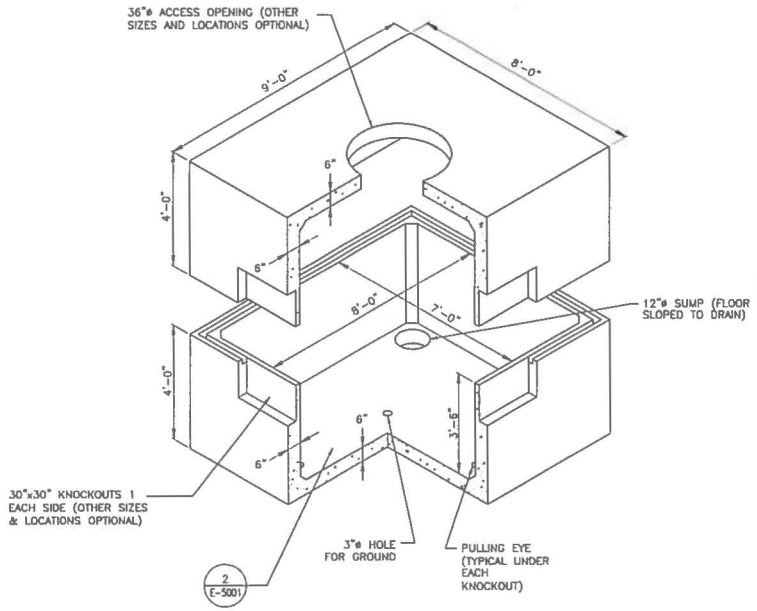

ISOMETRIC VIEW

1 E-1000 ELECTRICAL MANHOLE DETAIL
SCALE: NONE

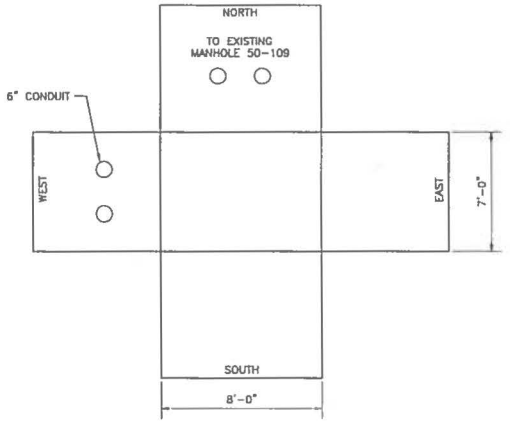

PLAN VIEW FOLD OUT

2 E-5001 ELECTRICAL MANHOLE DETAIL
SCALE: NONE

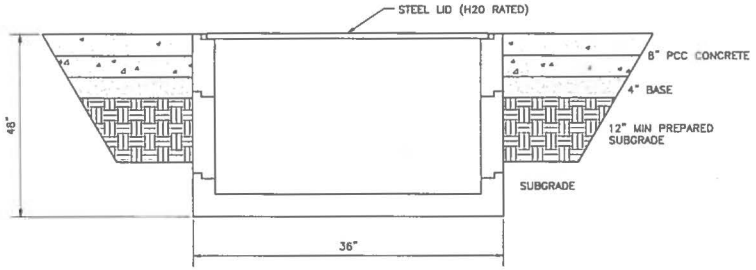

3 E-1000 30"x36"x48" PULLBOX DETAIL CONCRETE CAP
SCALE: NONE

GENERAL NOTES:

1. INTERIOR DIMENSIONS: 7'-0" WIDE x 8'-0" LONG x 7'-0" HEADROOM.
   APPROX. WEIGHTS: TOP RING = 14,200 LBS.
   BOTTOM RING = 14,200 LBS.
2. MINIMUM EXCAVATION 11'-0" x 10'-0" x DEPTH TO SUIT.
   ACCESSORIES:
   - LADDER, HOT-DIPPED GALVANIZED STEEL
   - CABLE-SUPPORT CHANNELS, HOT-DIPPED GALVANIZED STEEL, EMBEDDED IN MANHOLE WALLS, 4' ON CENTER
   - CABLE SUPPORT BRACKETS, HOT-DIPPED GALVANIZED
   - CABLE SUPPORT SADDLES, PORCELAIN
   - MANHOLE RING AND COVER, CAST IRON, CLASSIFIED AS HEAVY DUTY AND RATED 16,00 POUND WHEEL LOADS, MARKED "ELECTRIC"
3. CONCRETE: 4000 PSI MINIMUM COMPRESSIVE STRENGTH.
4. REINFORCING: PER ASTM C478-02 USING GRADE 40 STEEL BARS. SPLICES IN REINFORCING SHALL BE WELDED OR LAPPED AT LEAST 40 DIAMETERS.
5. STRENGTH: PER AASHTO HS-20 LIVE WHEEL LOAD PLUS DEAD LOAD.
6. DRAINAGE: PROVIDE DRAIN ROCK SUMP 2'-0" DEEP, 3'-0" DIAMETER CENTERED BENEATH SUMP HOLE.
7. SEALING: APPLY SEALING MASTIC TO HORIZONTAL JOINT AND BETWEEN MANHOLE RING AND TOP OF MANHOLE. PROVIDE RUBBER GASKET SEAL ON LID.
8. GROUND ROD: 3/4"ø x 8'-0" COPPERWELD.

NO	DATE	CLASS REV	ADC	DESCRIPTION	DWN	DES	CHKD	SUB	APP

AECOM

RLWTF-UP LOW LEVEL WASTE SUBPROJECT

MANHOLE DETAILS

BLDG. 230 TA-50

DRAWN	V DAVISON
DESIGN	S MOORE
CHECKED	G MOE
DATE	5/8/14

SUBMITTED: MANNY TARIN
APPROVED FOR RELEASE: ED ARTIGLIA

Los Alamos NATIONAL LABORATORY PO Box 1663 Los Alamos, New Mexico 87545

SHEET E-5001
335 OF 434

CLASSIFICATION | REVIEWER | DATE

PROJECT ID 100761 | DRAWING NO C55864 | REV 0

EUGENE DAVID MOE NEW MEXICO 21368 PROFESSIONAL ENGINEER

File Location: P:\RLWTF LOW-LEVEL WASTE FACILITY\000 CAD\C55864 MAIN BUILDING\SHEETS\16 ELECTRICAL\55864-E-5001-R0.DWG
Plotted By: MOORE, STEPHEN Plot Date: Monday, May 05, 2014

: 12386

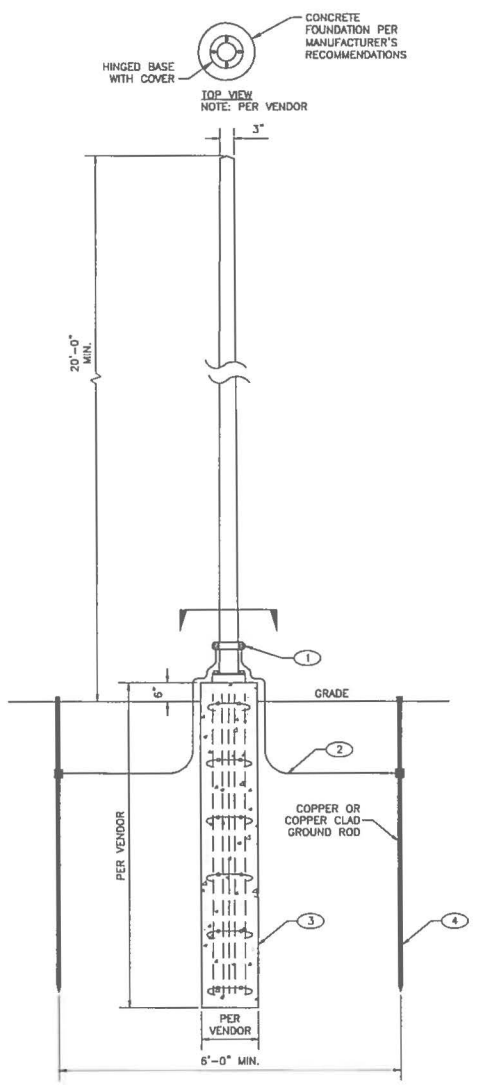

1 E-1003 LIGHTNING PROTECTION MAST DETAIL
SCALE: NONE

KEYED NOTES

1. PROVIDE SUITABLE GROUND CLAMP, BIMETALLIC, INSTALLED 18" ABOVE GRADE.
2. BOND MAST TO GROUND RODS USING #4/0 AWG BARE COPPER WIRE.
3. DESIGN FOUNDATION PER VENDORS RECOMMENDATIONS USING SITE SPECIFIC DESIGN CRITERIA.
4. INSTALL GROUND RODS WITH A MINIMUM VERTICAL DEPTH OF 10 FEET INTO THE EARTH. GROUND RODS SHALL NOT BE LESS THAN 1/2 INCH DIAMETER AND 8 FEET IN LENGTH.

NO	DATE	CLASS REV	ADC	DESCRIPTION	DWN	DES	CHKD	SUB	APP

AECOM

RLWTF-UP LOW LEVEL WASTE SUBPROJECT

LIGHTNING PROTECTION MAST DETAILS

BLDG. 230 TA-50

SUBMITTED MANNY TARIN

APPROVED FOR RELEASE ED ARTIGLIA

DRAWN	UP-D V DAVISON
DESIGN	S MOORE
CHECKED	D MOE
DATE	5/8/14

Los Alamos NATIONAL LABORATORY PO Box 1663 Los Alamos, New Mexico 87545

SHEET E-5004

336 OF 434

CLASSIFICATION | REVIEWER | DATE

PROJECT ID 100761 | DRAWING NO C55864 | REV 0

EUGENE DAVID MOORE NEW MEXICO 21369 REGISTERED PROFESSIONAL ENGINEER 5/8/14

File Location: P:\RLWTF LOW-LEVEL WASTE FACILITY\500 CAD\C55864 MAIN BUILDING\SHEETS\18 ELECTRICAL\55864-E-5004-R0.DWG
Plotted By: MOORE, STEPHEN Plot Date: Monday, May 05, 2014

12387

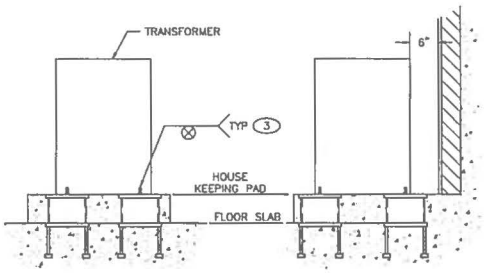

1 E-1101 TRANSFORMER INSTALLATION
SCALE: NONE

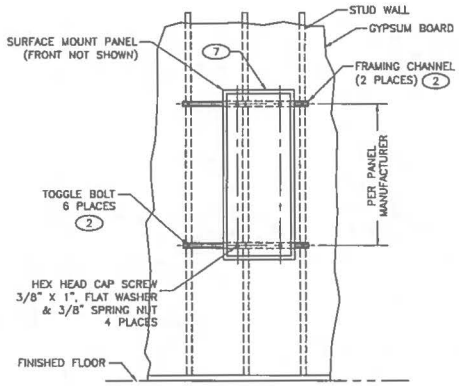

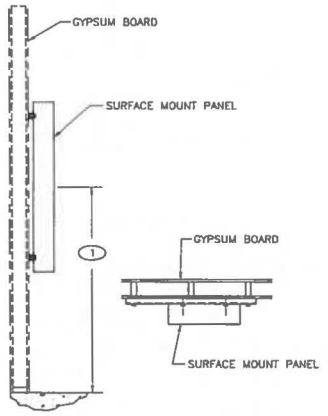

2 E-4100 2 E-1130 2 E-1102 STUD WALL PANEL INSTALLATION
SCALE: NONE

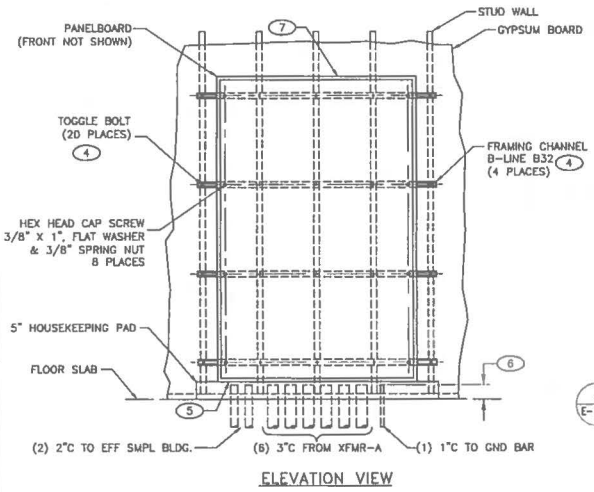

3 E-4100 STUD WALL AND FLOOR MOUNT PANEL INSTALLATION
SCALE: NONE

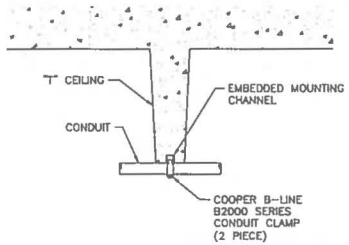

4 E-1130 4 E-1110 4 E-1109 HORIZONTAL CONDUIT SUPPORT FROM "T" CEILING
SCALE: NONE

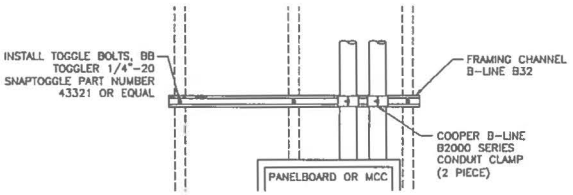

5 E-5100 VERTICAL CONDUIT SUPPORT FROM SHEET ROCK WALL
SCALE: NONE

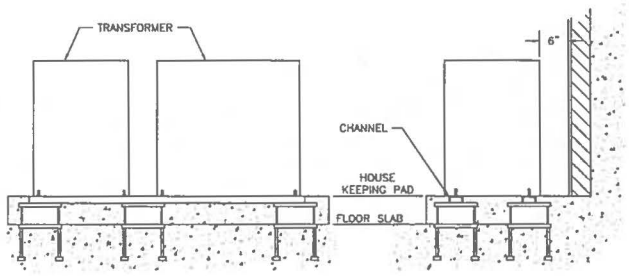

6 E-4100 TRANSFORMER INSTALLATION
SCALE: NONE

KEYED NOTES

1. INSTALL PANEL HEIGHT SO THAT CENTER IS 4'-0" AFF.
2. INSTALL QTY THREE (3) TOGGLE BOLTS ON THREE (3) METAL STUDS FOR EACH STRUT. USE BB TOGGLER 1/4"-20 SNAPTOGGLE PART NUMBER 43321 OR EQUAL.
3. ATTACH TRANSFORMER TO EMBED PLATES USING WELD STUDS OF MANUFACTURER RECOMMENDED SIZE IN MANUFACTURER RECOMMENDED LOCATIONS.
4. INSTALL QTY FIVE (5) TOGGLE BOLTS ON FIVE (5) METAL STUDS FOR EACH STRUT. USE BB TOGGLER 1/4"-20 SNAPTOGGLE PART NUMBER 43321 OR EQUAL.
5. MOUNT PANELBOARD WITH BOTTOM FLUSH WITH TOP OF HOUSEKEEPING PAD. COORDINATE LOCATION OF SERVICE CONDUITS AND BLOCKOUT WITH OPENING IN BOTTOM OF PANELBOARD.
6. INSTALL CONDUITS 4" ABOVE FINISHED FLOOR.
7. SEE DETAIL 5 THIS SHEET FOR CONDUIT SUPPORT REQUIREMENTS.

NO	DATE	CLASS REV	ADC	DESCRIPTION	DWN	DES	CHKD	SUB	APP

AECOM

RLWTF-UP LOW LEVEL WASTE SUBPROJECT

INSTALLATION DETAILS

BLDG. 230 TA-50

DRAWN	V DAVISON
DESIGN	E MOORE
CHECKED	G MOE
DATE	5/8/14

SUBMITTED MANNY TARIN

APPROVED FOR RELEASE ED ARTIQUA

Los Alamos NATIONAL LABORATORY PO Box 1663 Los Alamos, New Mexico 87545

SHEET E-5100

337 OF 434

CLASSIFICATION REVIEWER DATE

PROJECT ID 100761 DRAWING NO C55864 REV 0

EUGENE DAVID MOE NEW MEXICO 21369 PROFESSIONAL ENGINEER 5/8/14

12388

File Location: P:\RLWTF LOW-LEVEL WASTE FACILITY\300 CAD\C55864 MAIN BUILDING\SHEETS\10 ELECTRICAL\55864-E-5100-R0.DWG
Plotted By: MOORE, STEPHEN Plot Date: Monday, May 05, 2014

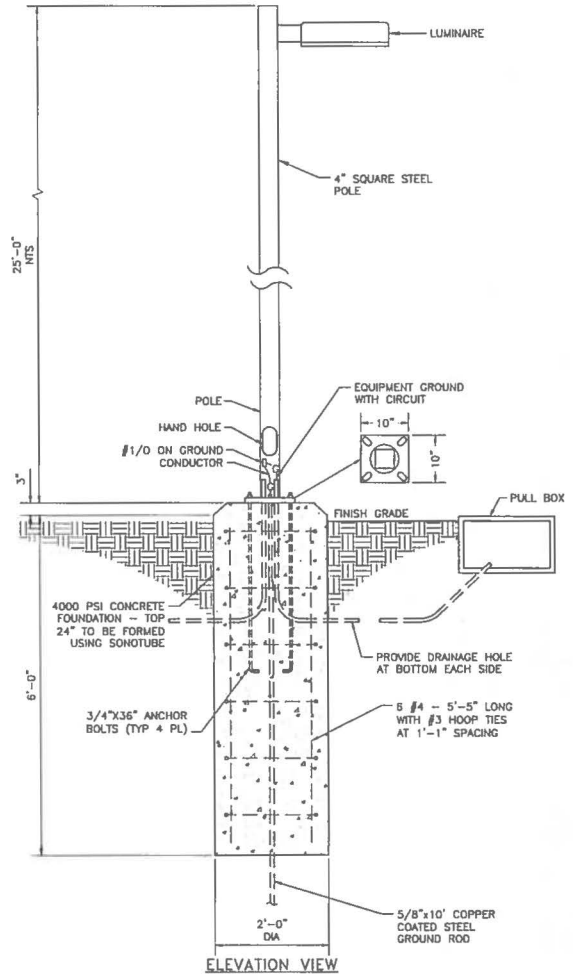

1 E-1002 POLE BASE DETAIL
SCALE: NONE

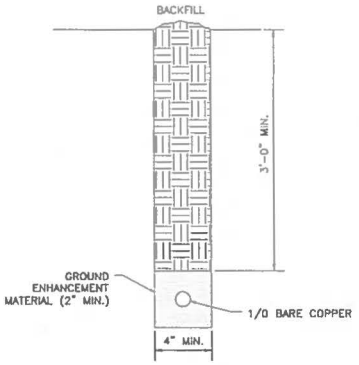

2 E-1003 LIGHTNING PROTECTION SYSTEM COUNTERPOISE DETAIL

SCALE: NONE

INSTALL ALL LIGHTNING PROTECTION COUNTERPOISE CONDUCTORS AS FOLLOWS:

- 5 FEET (MINIMUM) FROM PERIMETER FOUNDATIONS.
- 3 FEET (MINIMUM) BELOW GRADE.
- 6 FEET (MINIMUM) FROM ELECTRICAL OR COMMUNICATION SYSTEM GROUNDING ELECTRODES.
- BACK FILL WITH GROUND ENHANCEMENT MATERIAL.

NO	DATE	CLASS REV	ADC	DESCRIPTION	DWN	DES	CHKD	SUB	APP

AECOM

RLWTF-UP LOW LEVEL WASTE SUBPROJECT

GROUNDING DETAILS

DRAWN	V DAVISON
DESIGN	S MOORE
CHECKED	G MOE
DATE	5/8/14

BLDG. 230 TA-50

SUBMITTED MANNY TARIN

APPROVED FOR RELEASE ED ARTIGLIA

Los Alamos NATIONAL LABORATORY PO Box 1663 Los Alamos, New Mexico 87545

SHEET E-5101

338 OF 434

CLASSIFICATION REVIEWER DATE

PROJECT ID 100761

DRAWING NO C55864

REV 0

EUGENE DAVID MOE NEW MEXICO 21389 REGISTERED PROFESSIONAL ENGINEER 5/8/14

File Location: P:\RLWTF LOW-LEVEL WASTE FACILITY\500 CAD\C55864 MAIN BUILDING\SHEETS\18 ELECTRICAL\55864-E-5101-RD.DWG
Plotted By: MOORE, STEPHEN Plot Date: Monday, May 05, 2014
68827 :

NAMEPLATE ENGRAVING SCHEDULE			
ITEM	SIZE	CHAR SIZE	ENGRAVING
A	3" W x 1 H"	3/16"	CAM 50XX

PARTS LIST/MATERIAL LIST

QTY REQD		PARTS / DASH NUMBER	NOMENCLATURE/DESCRIPTION	MATERIAL/REFERENCE	SHEET	ITEM NO.
8	X	DETAIL 1	FLOOR/RACK MOUNTED			1
X	2	DETAIL 2	SHELF MOUNTED			2
1	1	PER SPECIFICATION SECTION 28 3233.4	ALPHA NET CAM WITH ALARM OPTION	CANBERRA		3
1	1	PER SPECIFICATION SECTION 28 3233.4	NETWORK T-BOX WITH 10' CABLE	CANBERRA		4
1	–	PER SPECIFICATION SECTION 28 3233.4	BRACKET, CAM HEAD	CANBERRA		5
1	1	HBL 5251 OR APPROVED EQUAL	RECEPTACLE, SINGLE NEMA 5-20	HUBBELL		6
1	1	WSM 175 OR APPROVED EQUAL	OUTLET BOX, SINGLE GANG	HUBBELL		7
AR	AR	B22	1 5/8" CHANNEL	B-LINE		8
AR	AR	–	BACKPLANE, STAINLESS STEEL, 16 GAGE			9
2	–	–	OUTLET BOX, 4"X4"			10

GENERAL NOTES

1. PROVIDE CONDUIT SUPPORTS FASTENED TO CEILING UNISTRUT GRID. ALL CONDUIT IS 3/4" RMC UNLESS NOTED.

KEYED NOTES

1. MOUNT BACKPLANE TO CHANNEL. CHANNEL SHALL BE SUPPORTED FROM FLOOR USING HOLLOW STRUCTURAL STEEL EQUIPMENT FRAME OR SUPPORT STAND PER THE METHODS SHOWN ON SHEET E-5108 DETAIL 2. MOUNT BACKPLANE 60" AFF.
2. SECURELY FASTEN CONDUIT TO T-CEILING EMBED WITHIN 3 FEET OF END USING METHODS SHOWN ON SHEET E-5100 DETAIL 4.
3. INSTALL TWO OUTLET BOXES. ONE FOR 120 VAC POWER AND ONE FOR COMMUNICATIONS. SEE SHEETS E-1107 AND E-1108 FOR RECEPTACLE PLANS.
4. INSTALL OUTLET VACUUM TUBING PER PLUMBING DRAWINGS. SEE P-1104, P-1105 AND P-6006 FOR VACUUM PIPING P&ID AND PLAN DRAWINGS.
5. MOUNT BACKPLANE TO LAB ISLAND CASEWORK UPPER SHELF.
6. ROUTE POWER AND COMMUNICATION CONDUCTORS FROM CEILING THROUGH SERVICE "UMBILICAL" PROVIDED WITH LAB CASE WORK. USE 3/4" FLEXIBLE METAL CONDUIT FROM CAM BACKPANEL TO SERVICE UMBILICAL.
7. PROVIDE STRAIGHT RUN OF VERTICAL 3/4" RMC FROM EQUIPMENT TO SUPPORT IN CEILING. SUPPORT STRAIGHT RUN OF CONDUIT WITHIN 3' OF EACH END. THREADED COUPLINGS REQUIRED FOR VERTICAL RISERS.

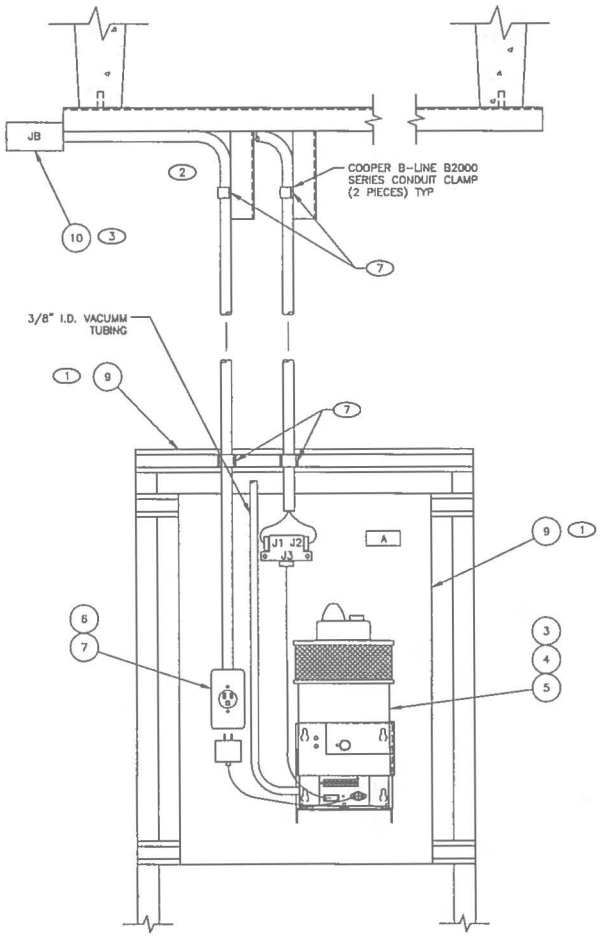

ELEVATION VIEW

1 E-1111 CAM FLOOR/RACK MOUNTED DETAIL
SCALE: NONE

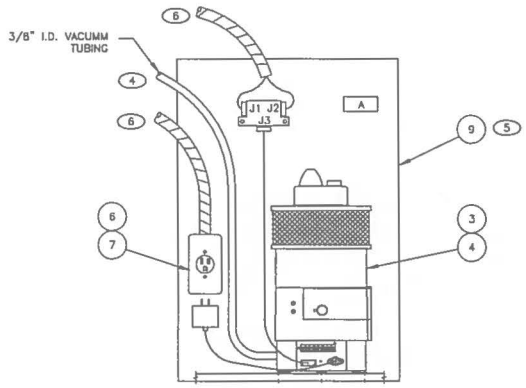

ELEVATION VIEW

2 E-1112 CAM SHELF MOUNTED DETAIL
SCALE: NONE

NO	DATE	CLASS REV	ADC	DESCRIPTION	DWN	DES	CHKD	SUB	APP

AECOM

RLWTF-UP LOW LEVEL WASTE SUBPROJECT

CONTINUOUS AIR MONITOR MOUNTING DETAILS

BLDG. 230 TA-50

DRAWN	V DAVISON
DESIGN	S MOORE
CHECKED	D MOE
DATE	5/8/14

SUBMITTED MANNY TARIN

APPROVED FOR RELEASE ED ARTIGLIA

Los Alamos NATIONAL LABORATORY PO Box 1663 Los Alamos, New Mexico 87545

SHEET E-5102

339 OF 434

CLASSIFICATION | REVIEWER | DATE

PROJECT ID 100761 | DRAWING NO C55864 | REV 0

EUGENE DAVID MOE NEW MEXICO 21368 PROFESSIONAL ENGINEER

File Location: P:\RLWTF LOW-LEVEL WASTE FACILITY\000 CAD\C55864 MAIN BUILDING\SHEETS\16 ELECTRICAL\55864-E-5102-R0.DWG
Plotted By: MOORE, STEPHEN Plot Date: Monday, May 05, 2014

12390

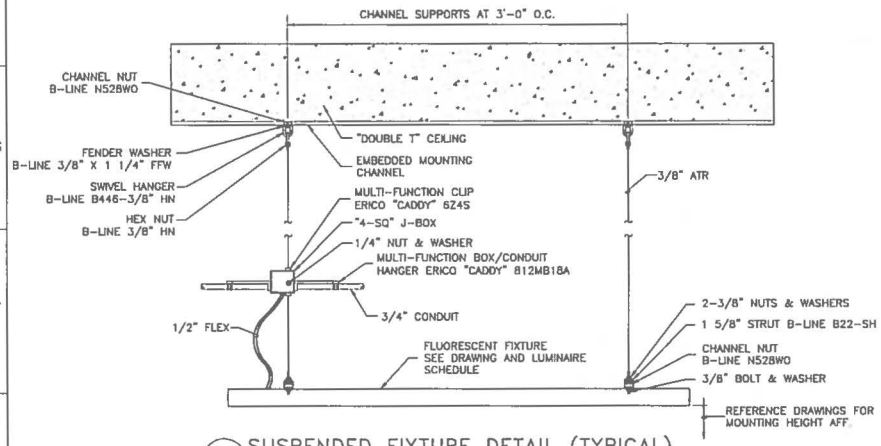

1 E-1103 SUSPENDED FIXTURE DETAIL (TYPICAL)
SCALE: NONE

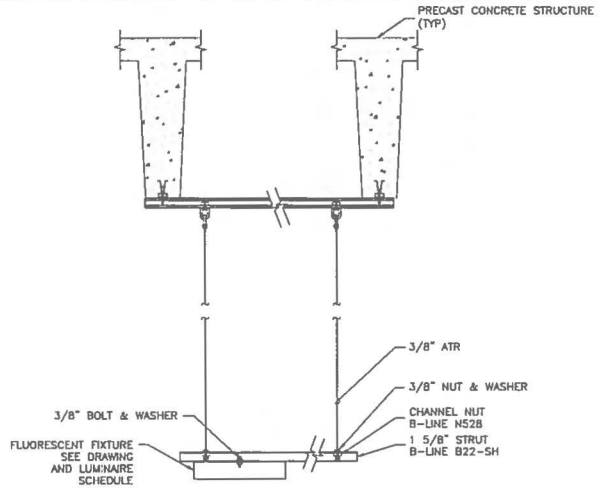

2 E-1104 2 E-1103 SUSPENDED FIXTURE "DOUBLE T" SPAN DETAIL
SCALE: NONE

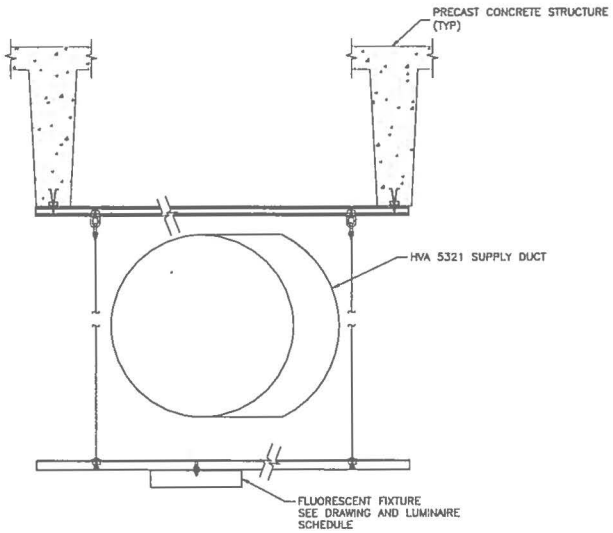

3 E-1103 SUSPENDED FIXTURE DETAIL (AROUND SUPPLY)
SCALE: NONE

NO	DATE	CLASS REV	ADC	DESCRIPTION	DWN	DES	CHKD	SUB	APP

AECOM

RLWTF-UP LOW LEVEL WASTE SUBPROJECT

ELECTRICAL DETAILS

BLDG. 230 TA-50

DRAWN	V DAVISON
DESIGN	S MOORE
CHECKED	G MOE
DATE	5/8/14

SUBMITTED: MANNY TARIN
APPROVED FOR RELEASE: ED ARTIGLIA

Los Alamos NATIONAL LABORATORY PO Box 1663 Los Alamos, New Mexico 87545

SHEET E-5104
340 OF 434

CLASSIFICATION | REVIEWER | DATE

PROJECT ID 100761 | DRAWING NO C55864 | REV 0

EUGENE DAVID MOE NEW MEXICO 21389 PROFESSIONAL ENGINEER

File Location: P:\RLWTF LOW-LEVEL WASTE FACILITY\500 CAD\C55864 MAIN BUILDING\SHEETS\16 ELECTRICAL\55864-E-5104-R0.DWG
Plotted By: MOORE, STEPHEN Plot Date: Monday, May 05, 2014

16321

HEAT TRACE CIRCUIT SCHEDULE

CIRCUIT NUMBER	PIPE NUMBER	PIPE SIZE	NOMENCLATURE/ DESCRIPTION	REFERENCE	LENGTH IN FT.	POWER CIRCUIT	TOTAL AMPS
1	CA-212-CS-3"	3"	RIGID PIPE	P-6202/E-4000	175	HTC-1503-1	7.3
3	NPWC-229-CS-2"	2"	RIGID PIPE	P-6201/E-4000	175	HTC-1503-3	7.3
5	HWS-519-CS-3"	3"	RIGID PIPE	M-6205/E-4000	250	HTC-1503-5	10.4
7	COND-001-SS-3/4"	3/4"	RIGID PIPE	M-6203/E-4000	175	HTC-1503-7	7.3
9	PWHR-221-CU-3/4"	3/4"	RIGID PIPE	P-6201/E-4000	175	HTC-1503-9	7.3
11	PCWS-128-CS-2 1/2"	2 1/2"	RIGID PIPE	M-6204/E-4000	175	HTC-1503-11	7.3
2	HWR-184-CS-3"	3"	RIGID PIPE	M-6205/E-4000	250	HTC-1503-2	10.4
4	PCWR-111-CS-2 1/2"	2 1/2"	RIGID PIPE	M-6204/E-4000	175	HTC-1503-4	7.3
6	PWC-CS-3"	3"	RIGID PIPE	P-6201/E-4000	175	HTC-1503-6	7.3
8	PHWS-2 1/2"	2 1/2"	RIGID PIPE	P-6201/E-4000	175	HTC-1503-8	7.3

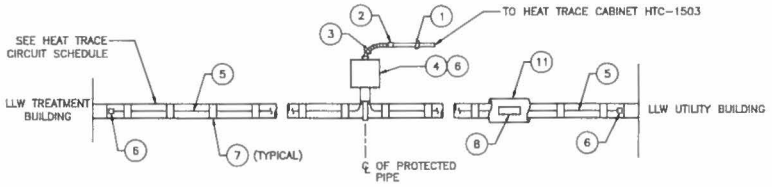

1 / E-4000 HEAT TRACE DETAIL
SCALE: NONE

PARTS/MATERIALS LIST

ITEM #	PARTS/EQUIPMENT NUMBER	NOMENCLATURE/ DESCRIPTION	MATERIAL/ REFERENCE	QUANTITY REQUIRED
1		RGS CONDUIT, 3/4"	---	AR
2		COUPLING, 3/4"	---	9
3		LIQUID-TIGHT FLEX CONDUIT, 3/4"	---	AR
4	DCA-H	POWER CONNECTION KIT	THERMON	9
5	BSX-5-1 BNOJ	CABLE, HEAT TRACE, 5W/FT WITH INSULATING JACKET	THERMON	AR
6	PETK-1D	TERMINATION KIT FOR END OF CIRCUIT FOR SX CABLE	THERMON	27
7	FT-1L/FT-1H	FIXING TAPE - COPPER 2-1/2" WIDE MINIMUM	THERMON	AR
8	CL	"ELECTRIC HEAT TRACING" LABEL	THERMON	AR
9	B4X-15140	THERMOSTAT	THERMON	1
10		HEAT TRACE CABINET HTC-1503	NAMEPLATE	1
11		INSULATION, 1" THICK	CERABLANKET	AR
12	PER SPECIFICATION SECTION 22 0535	HEAT TRACE CABINET	---	1

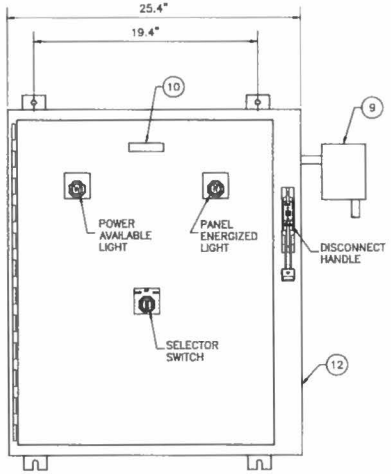

FRONT VIEW

2 / E-4000 HEAT TRACE CABINET HTC-1503
SCALE: NONE

GENERAL NOTES

1. COVER INSULATION WITH FIBERGLASS FABRIC IMPREGNATED WITH SILICONE RUBBER.
2. HEAT TRACE SHALL BE INSTALLED LINEAR ALONG THE EXTERIOR OF THE PIPE AND SHALL BE OVERLAYED BY CONDUCTIVE COPPER TAPE (ITEM 7).
3. WHEN HEAT TRACED PIPE ENTERS BUILDING, EXTEND CABLE MINIMUM 12".
4. ALL HEATING CABLE POWER CONNECTION POINTS SHALL BE SECURED TO THE TRACED PIPING. INSTALL PER MANUFACTURER'S INSTRUCTIONS.
5. FIELD ROUTE CONDUIT TO HEAT TRACE ENCLOSURE. SEE E-4000 FOR LOCATION.
6. FOR HEAT TRACE WIRING DIAGRAM SEE SHEET E-6105.

NO	DATE	CLASS REV	ADC	DESCRIPTION	DWN	DES	CHKD	SUB	APP

AECOM

RLWTF-UP LOW LEVEL WASTE SUBPROJECT

HEAT TRACE DETAILS

BLDG. 230 TA-50

DRAWN	V DAVISON
DESIGN	E MOORE
CHECKED	G MOE
DATE	5/8/14

SUBMITTED MANNY TARIN — APPROVED FOR RELEASE ED ARTIOLA

Los Alamos NATIONAL LABORATORY PO Box 1663 Los Alamos, New Mexico 87545

SHEET E-5105

341 OF 434

CLASSIFICATION | REVIEWER | DATE

PROJECT ID 100761 | DRAWING NO C55864 | REV 0

EUGENE DAVID MOE NEW MEXICO 21389 PROFESSIONAL ENGINEER 5/8/2014

25321 :

File Location: P:\RLWTF LOW-LEVEL WASTE FACILITY\300 CAD\C55864 MAIN BUILDING\SHEETS\10 ELECTRICAL\C55864-E-5105-R0.DWG
Plotted By: MOORE, STEPHEN Plot Date: Monday, May 05, 2014

HEAT TRACE CIRCUIT SCHEDULE

CIRCUIT NUMBER	PIPE NUMBER	PIPE SIZE	NOMENCLATURE/ DESCRIPTION	REFERENCE	LENGTH IN FT.	POWER CIRCUIT	TOTAL AMPS
1	1 1/2" HWS/HWR 2" HWS/HWR 3" HWS/HWR	1 1/2", 2", 3"	RIGID PIPE	M-6102, M-6103/ E-4001	275	PP-1-41	11.5

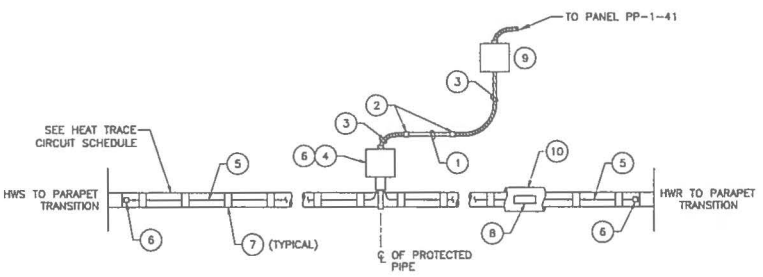

1 E-4001 ROOF TOP – HWS/HWR PIPING HEAT TRACE DETAIL
SCALE: NONE

PARTS/MATERIALS LIST

ITEM #	PARTS/EQUIPMENT NUMBER	NOMENCLATURE/ DESCRIPTION	MATERIAL/ REFERENCE	QUANTITY REQUIRED
1		RGS CONDUIT, 3/4"	---	AR
2		COUPLING, 3/4"	---	2
3		LIQUID-TIGHT FLEX CONDUIT, 3/4"	---	AR
4	PCA-H	POWER CONNECTION KIT	THERMON	1
5	BSX-5-1 BNOJ	CABLE, HEAT TRACE, 5W/FT WITH INSULATING JACKET	THERMON	AR
6	PETK-1D	TERMINATION KIT FOR END OF CIRCUIT FOR SX CABLE	THERMON	3
7	FT-1L/FT-1H	FIXING TAPE – COPPER 2-1/2" WIDE MINIMUM	THERMON	AR
8	CL	"ELECTRIC HEAT TRACING" LABEL	THERMON	AR
9	B4X-15140	THERMOSTAT	THERMON	1
10		INSULATION, 1" THICK	CERABLANKET	AR

GENERAL NOTES

1. COVER INSULATION WITH FIBERGLASS FABRIC IMPREGNATED WITH SILICONE RUBBER.
2. HEAT TRACE SHALL BE INSTALLED LINEAR ALONG THE EXTERIOR OF THE PIPE AND SHALL BE OVERLAYED BY CONDUCTIVE COPPER TAPE (ITEM 7).
3. WHEN HEAT TRACED PIPE ENTERS BUILDING, EXTEND CABLE MINIMUM 12".
4. ALL HEATING CABLE POWER CONNECTION POINTS SHALL BE SECURED TO THE TRACED PIPING. INSTALL PER MANUFACTURER'S INSTRUCTIONS.
5. FIELD ROUTE CONDUIT TO HEAT TRACE JUNCTION BOX. SEE E-4102 FOR LOCATION.

NO	DATE	CLASS REV	ADC	DESCRIPTION	DWN	DES	CHKD	SUB	APP

AECOM

RLWTF-UP LOW LEVEL WASTE SUBPROJECT

HEAT TRACE DETAILS

BLDG. 230 TA-50

DRAWN	V DAVISON
DESIGN	S MOORE
CHECKED	G MOE
DATE	5/8/14

SUBMITTED: MANNY TARIN
APPROVED FOR RELEASE: ED ARTIGLIA

Los Alamos NATIONAL LABORATORY PO Box 1663 Los Alamos, New Mexico 87545

SHEET E-5106
342 OF 434

CLASSIFICATION | REVIEWER | DATE

PROJECT ID 100761 | DRAWING NO C55864 | REV 0

EUGENE DAVID MOE NEW MEXICO 21368 PROFESSIONAL ENGINEER

File Location: P:\RLWTF LOW-LEVEL WASTE FACILITY\500 CAD\C55864 MAIN BUILDING\SHEETS\18 ELECTRICAL\55864-E-5106-R0.DWG
Plotted By: MOORE, STEPHEN Plot Date: Monday, May 05, 2014

12393

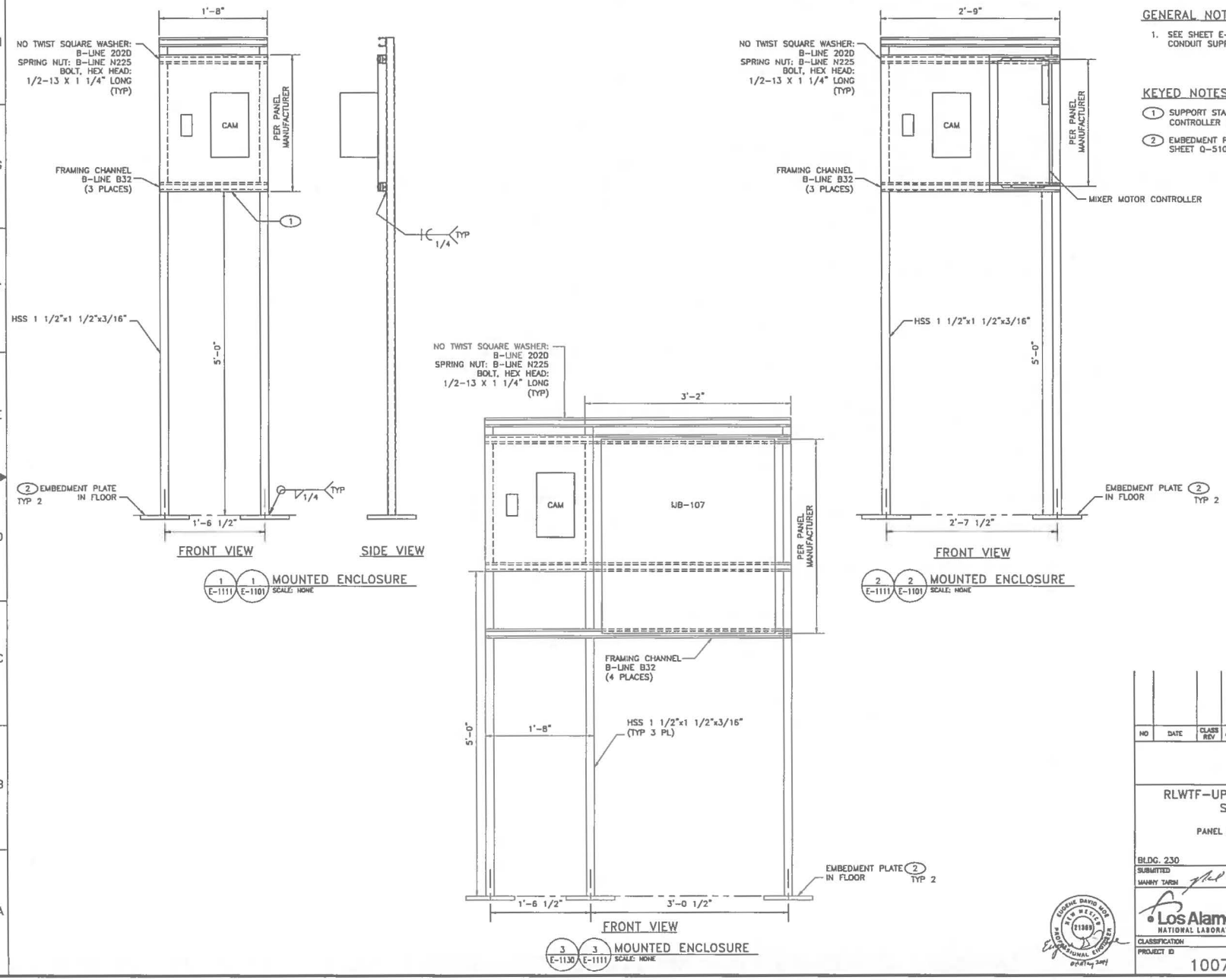

GENERAL NOTES

1. SEE SHEET E-5102 FOR CAM PLANE DETAILS AND VERTICAL CONDUIT SUPPORT REQUIREMENTS.

KEYED NOTES

1. SUPPORT STAND DETAIL ALSO USED FOR MIXER MOTOR CONTROLLER (NOT SHOWN).
2. EMBEDMENT PLATES INSTALLED WITH CONCRETE FLOOR SLAB. SEE SHEET Q-5100.

NO	DATE	CLASS REV	ADC	DESCRIPTION	DWN	DES	CHKD	SUB	APP

AECOM

RLWTF-UP LOW LEVEL WASTE SUBPROJECT

PANEL INSTALLATION DETAILS

BLDG. 230 TA-50

DRAWN	V DAVISON
DESIGN	S MOORE
CHECKED	D MOE
DATE	5/8/14

SUBMITTED: MANNY TARIN

APPROVED FOR RELEASE: ED ARTIGLIA

Los Alamos NATIONAL LABORATORY PO Box 1663 Los Alamos, New Mexico 87545

SHEET E-5108

343 OF 434

CLASSIFICATION | REVIEWER | DATE

PROJECT ID 100761 | DRAWING NO C55864 | REV 0

EUGENE DAVID MOE NEW MEXICO 21389 PROFESSIONAL ENGINEER

File Location: P:\RLWTF LOW-LEVEL WASTE FACILITY\500 CAD\C55864 MAIN BUILDING\SHEETS\18 ELECTRICAL\55864-E-5108-R0.DWG
Plotted By: MOORE, STEPHEN; Plot Date: Monday, May 05, 2014

1239 41

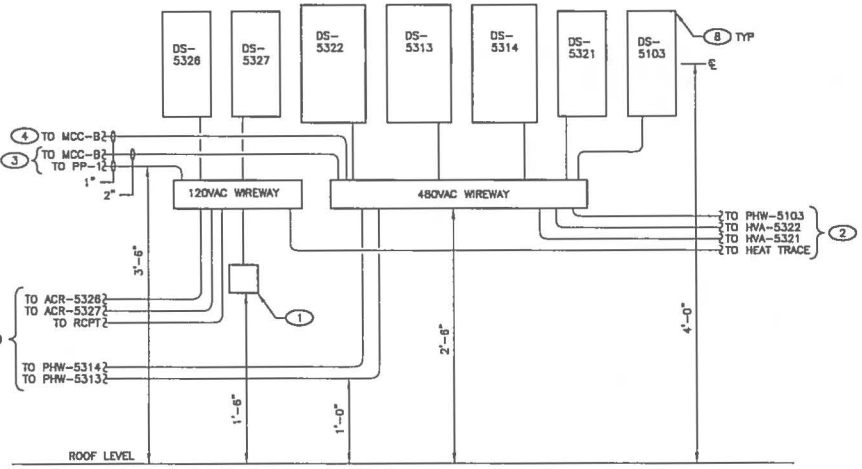

1 E-4107 ROOF EQUIPMENT DISCONNECTS
SCALE: NONE

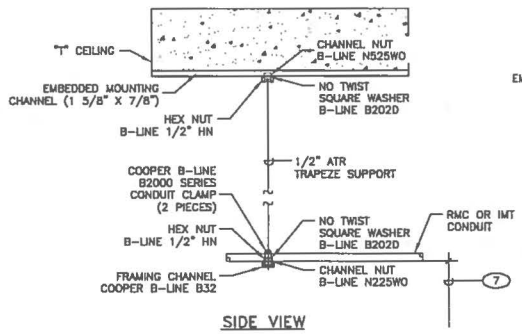

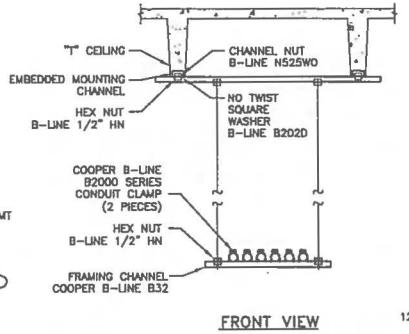

2 E-1110 2 E-1109 CONDUIT TRAPEZE DETAIL
SCALE: NONE

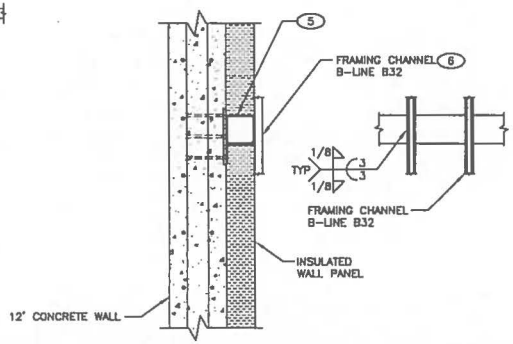

3 E-1101 3 E-1109 3 E-1130 ROOM 1011 WALL SUPPORTS
SCALE: NONE

KEYED NOTES

1. INSTALL GENERAL PURPOSE GFCI RECEPTACLE IN WEATHER PROOF OUTLET BOX.
2. FIELD ROUTE CONDUIT TO EQUIPMENT ALONG INSIDE OF PARAPET WALL. MOUNT CONDUIT TO ENSURE LOWEST CONDUIT IS GREATER THAN 12" ABOVE ROOF LEVEL.
3. FIELD ROUTE CONDUIT FROM PENETRATION IN ELECTRICAL ROOM WEST WALL. ROUTE CONDUIT OVER TOP OF PARAPET. BOND ALL METALLIC ENCLOSURES TO EQUIPMENT GROUNDING CONDUCTOR. PROVIDE LISTED GROUND TERMINAL AND EXTEND EQUIPMENT GROUNDING CONDUCTOR TO THE GROUND TERMINAL IN EACH DISCONNECT.
4. INSTALL 3/4" CONDUIT WITH 6 CONDUCTORS FOR INTERLOCK BETWEEN DISCONNECT SWITCH AUXILIARY CONTACTS AND ASD.
5. CONTINUOUS 6" TUBE STEEL IS AVAILABLE AT THREE HEIGHTS (8' 4", 12' 2" AND 18") IN ROOM 1011. WELD CHANNEL TO TUBE STEEL FOR PANEL OR CONDUIT SUPPORT.
6. ADJUST LENGTH OF CHANNEL AS NEEDED. MOUNT ALL PANELS CENTERED 4' AFF. FASTEN CONDUIT TO VERTICAL CHANNEL USING TWO PEICE CONDUIT CLAMPS.
7. HEIGHT 15' -17' AFF IN NORTH PROCESS AREA RM 1011 AND 11' - 12' AFF IN SOUTH LOW BAY PORTION OF BUILDING OR AS NEEDED TO AVOID OTHER EQUIPMENT.
8. PANELS MOUNTED DIRECTLY ON UNFINISHED CONCRETE WALL TO BE SUPPORTED USING POST INSTALLED ANCHORS PER SPECIFICATION 03 1534, SS HILTI KWIK BOLT TZ 1/2"ø x hnom = 3 5/8" ANCHORS.

NO	DATE	CLASS REV	ADC	DESCRIPTION	DWN	DES	CHKD	SUB	APP
1	7/7/14	U		REVISED KEYED NOTE 8					

AECOM

RLWTF-UP LOW LEVEL WASTE SUBPROJECT

DETAILS

DRAWN	V DAWSON
DESIGN	S MOORE
CHECKED	G MOE
DATE	8/8/14

BLDG. 230 TA-50

SUBMITTED: MANNY TARIN
APPROVED FOR RELEASE: ED ARTIELA

Los Alamos NATIONAL LABORATORY PO Box 1663 Los Alamos, New Mexico 87545

SHEET E-5109
344 OF 434

CLASSIFICATION | REVISION | DATE

PROJECT ID 100761 | DRAWING NO C55864 | REV 1

M. EVELYN BORREGO NEW MEXICO 22184 PROFESSIONAL ENGINEER 7-7-14

File Location: N:\RLWTF LOW-LEVEL WASTE FACILITY\000 CAD\CS55864 MAIN BUILDING\SHEETS\18 ELECTRICAL\S55864-E-5109-R1.DWG
Plotted By: BRODMAN, DARLENE Plot Date: Thursday, July 03, 2014

12295

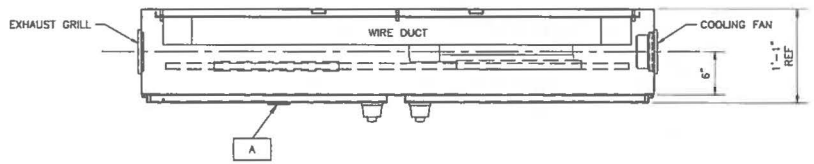

TOP VIEW

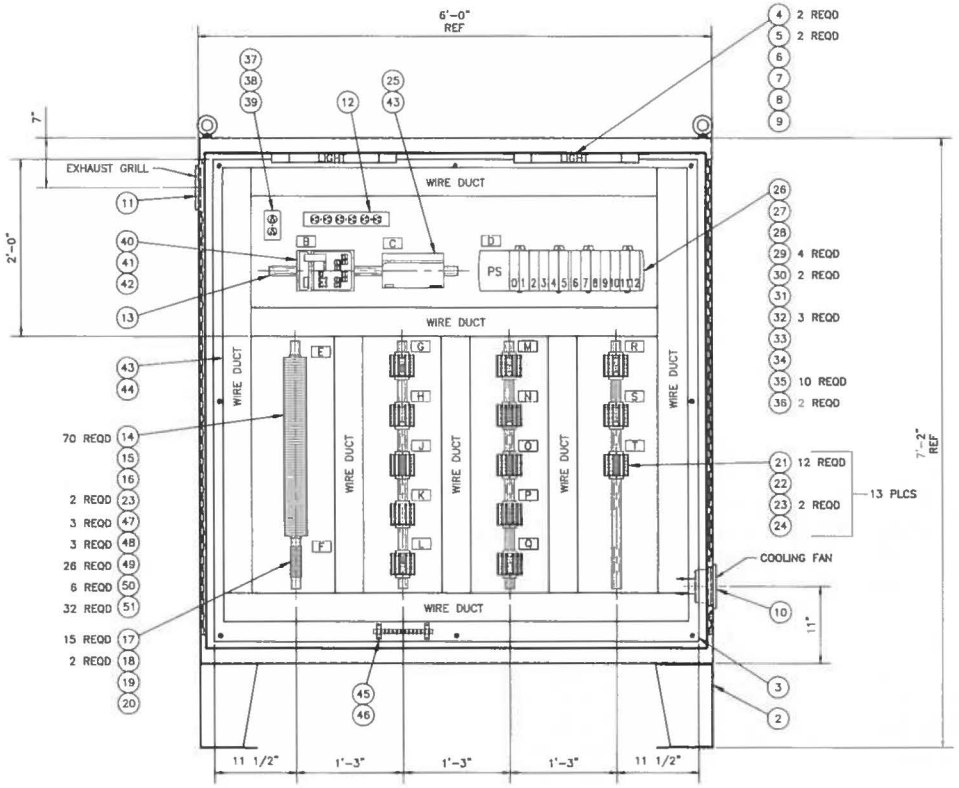

FRONT VIEW

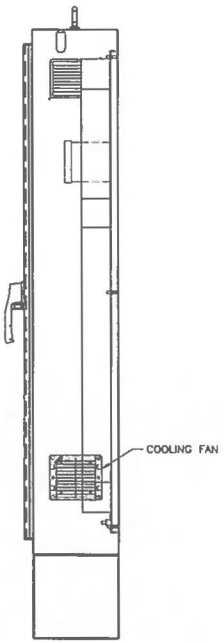

SIDE VIEW

1 CAB-101

1/E-1101 1/E-1130 CAB-101 DETAIL (DOORS NOT SHOWN)

4" 0 6" 1'
1 1/2"=1'-0"

GENERAL NOTES

1. IF THIS SHEET IS NOT 24"X36", THEN IT IS A REDUCED SIZE PLOT. USE THE GRAPHIC SCALE ACCORDINGLY.
2. EQUIPMENT SHALL BE INSTALLED PER MANUFACTURER'S INSTRUCTIONS USING THE APPROPRIATE HARDWARE.
3. ALL WIRES AND CABLE SHALL BE LABELED AT BOTH TERMINATIONS.
4. ENCLOSURE AND ENCLOSURE DOORS SHALL BE ATTACHED TO GROUND.
5. SEE SHEET E-5110B FOR PARTS LIST/MATERIAL LIST AND NAMEPLATE ENGRAVING SCHEDULE.
6. SEE SHEET E-6150 FOR I/O SLOT ASSIGNMENTS.
7. SEE SHEET E-6166A THROUGH E-6166H FOR PANEL TERMINATION.
8. SEE SHEET E-6171 FOR INSTRUMENT ELECTRICAL DISTRIBUTION.

NO	DATE	CLASS REV	ADC	DESCRIPTION	DRWN	DES	CHKD	SUB	APP

AECOM

RLWTF-UP LOW LEVEL WASTE SUBPROJECT

CAB-101 PANEL LAYOUT

DRAWN	V DAVISON
DESIGN	S MOORE
CHECKED	G MOE
DATE	5/8/14

BLDG. 230 TA-50

SUBMITTED MANNY TARIN

APPROVED FOR RELEASE ED ARTIGLIA

Los Alamos NATIONAL LABORATORY PO Box 1663 Los Alamos, New Mexico 87545

SHEET E-5110A

345 OF 434

CLASSIFICATION REVIEWER DATE

PROJECT ID 100761 DRAWING NO C55864 REV 0

EUGENE DAVID MOE 21369 NEW MEXICO PROFESSIONAL ENGINEER

96221

File Location: P:\RLWTF LOW-LEVEL WASTE FACILITY\300 CAD\C55864 MAIN BUILDING\SHEETS\18 ELECTRICAL\55864-E-5110A-R0.DWG
Plotted By: MOE, STEVEN Plot Date: Monday, May 05, 2014

PARTS LIST/MATERIAL LIST

QTY REQD	PARTS / DASH NUMBER	NOMENCLATURE/DESCRIPTION	MATERIAL/REFERENCE	SHEET	ITEM NO.
X	-010	CAB-101 CABINET			1
1	A74H7212LP3PT OR APPROVED EQUAL	ENCLOSURE FREE STANDING 74"x72"x12" NEMA TYPE 4, TWO DOOR, FLOOR STANDS	HOFFMAN		2
1	A72P72 OR APPROVED EQUAL	BACK PANEL 58" X 68"	HOFFMAN		3
2	LF120V18	18" FLUORESCENT ENCLOSURE LIGHT	HOFFMAN		4
2	FBT5	18" FLUORESCENT BULB	HOFFMAN		5
1	LF120VCORD	FLUORESCENT LIGHT POWER CORD	HOFFMAN		6
1	ALFSWD	DOOR ACTIVATED SWITCH	HOFFMAN		7
1	LGCABLE24	GANGING CABLE, 24"	HOFFMAN		8
1	LDSWITCH18	DOORSWITCH CABLE, 18"	HOFFMAN		9
1	TFP41	COOLING FAN PACKAGE, 4" FAN, AND TYPE 1 FILTER	HOFFMAN		10
1	TEP4	EXHAUST GRILL & FILTER, TYPE 1	HOFFMAN		11
1	DP1N120615	POWER OUTLET STRIP, 6 RECEPTACLES	HOFFMAN		12
AR	199-DR1 OR APPROVED EQUAL	RAIL, MOUNTING, STEEL	ALLEN-BRADLEY		13
70	1492-H6	FUSE BLOCK, 300V, 12A MAX	ALLEN-BRADLEY		14
1	1492-N37	END BARRIER	ALLEN-BRADLEY		15
AR	1492-N49	SIDE JUMPER, FANNING STRIP, 10 POLE	ALLEN-BRADLEY		16
15	1492-HM1BL	TERMINAL BLOCK, 600V, 30A MAX	ALLEN-BRADLEY		17
2	1492-EAH35	END ANCHOR	ALLEN-BRADLEY		18
1	1492-NM36	END BARRIER	ALLEN-BRADLEY		19
AR	1492-N39	SIDE JUMPER, FANNING STRIP, 50 POLE	ALLEN-BRADLEY		20
156	1492-JT3M OR APPROVED EQUAL	TERMINAL, 300V, 3 LEVEL/3 CIRCUIT, WITH GROUND POINT	ALLEN-BRADLEY		21
13	1492-EBJ3TM OR APPROVED EQUAL	END BARRIER	ALLEN-BRADLEY		22
28	1492-EAHJ35 OR APPROVED EQUAL	END ANCHOR	ALLEN-BRADLEY		23
AR	1492-SJ6A-50	INSULATED SIDE JUMPER, 50 POLE	ALLEN-BRADLEY		24
1	1606XL480E	POWER SUPPLY, 480W, 24-28V	ALLEN-BRADLEY		25
1	1756-A13	13 SLOT CONTROLOGIX CHASSIS	ALLEN-BRADLEY		26
1	1756-PA75	85-255V AC POWER SUPPLY (5V@13A)	ALLEN-BRADLEY		27
1	1756-ENBT	ETHERNET BRIDGE MODULE	ALLEN-BRADLEY		28
4	1756-IB16I	10-30VDC ISOLATED INPUT 16 PTS (36 PIN)	ALLEN-BRADLEY		29
2	1756-OB16I	10-30VDC ISOLATED OUTPUT 16 PTS (36 PIN)	ALLEN-BRADLEY		30
1	1756-OW16I	N.O. ISOLATED RELAY OUTPUT 16 PTS (36 PIN)	ALLEN-BRADLEY		31
3	1756-IF16	ANALOG INPUT CURRENT/VOLTAGE 16PTS (36 PIN)	ALLEN-BRADLEY		32
1	1756-OF8	ANALOG OUTPUT CURRENT/VOLTAGE 8PTS (20 PIN)	ALLEN-BRADLEY		33
1	1756-IR16I	ISOLATED RTD INPUT 6 PTS (20 PIN)	ALLEN-BRADLEY		34
10	1756-TBCH	36 PIN SCREW CLAMP BLOCK WITH STANDARD HOUSING	ALLEN-BRADLEY		35
2	1756-TBNH	20 PIN NEMA SCREW CLAMP BLOCK	ALLEN-BRADLEY		36
1	5262G	DUPLEX RECEPTACLE, NEMA 5-15R, GRAY	HUBBELL		37
1	660	HANDY BOX, 4" X 2" X 1-7/8"	RACO		38
1	864	HANDY BOX COVER, DUPLEX RECEPTACLE	RACO		39
1	IE-3000-8TC	8-PORT 10/100 ETHERNET SWITCH	CISCO		40
1	PWR-IE3000-AC	POWER CONVERTER	CISCO		41
2	5625.072.1731	POWER CORD, 5-15P TO ROJ, 18/3, 6FT	AMERICORD		42
AR	G4X4WH6 OR APPROVED EQUAL	WIRE DUCT, WIDE SLOT, WHITE, 4.25" X 4.1"	PANDUIT		43
AR	C4WH6 OR APPROVED EQUAL	COVER, WHITE	PANDUIT		44
1	UGB2/0-414-12	GROUNDING BAR, 12 PORT	PANDUIT		45
1	UGB-8-SO	BONDING STAND-OFF	PANDUIT		46
3		FUSE, 5.0A	---		47
3		FUSE, 2.0A	---		48
26		FUSE, 1.0A	---		49
6		FUSE, 0.5A	---		50
32		FUSE, 0.1A	---		51

NAMEPLATE ENGRAVING SCHEDULE

ITEM	SIZE	CHAR SIZE	ENGRAVING
A	3" W x 1" H	3/8"	CAB-101
B	3" W x 1" H	3/8"	SW3
C	3" W x 1" H	3/8"	PS1
D	3" W x 1" H	3/8"	NODE 1
E	1" W x 0.5" H	1/4"	PB1
F	1" W x 0.5" H	1/4"	RTN1
G	1" W x 0.5" H	1/4"	TB1
H	1" W x 0.5" H	1/4"	TB2
J	1" W x 0.5" H	1/4"	TB3
K	1" W x 0.5" H	1/4"	TB4
L	1" W x 0.5" H	1/4"	TB5
M	1" W x 0.5" H	1/4"	TB6
N	1" W x 0.5" H	1/4"	TB7
O	1" W x 0.5" H	1/4"	TB8
P	1" W x 0.5" H	1/4"	TB9
Q	1" W x 0.5" H	1/4"	TB10
R	1" W x 0.5" H	1/4"	TB11
S	1" W x 0.5" H	1/4"	TB12
T	1" W x 0.5" H	1/4"	TB13

GENERAL NOTES:

1. NAMEPLATE SHALL BE 1/16" THK MATTE FINISH LAMINATED PLASTIC WHITE SURFACE/BLACK CORE. BOND IN PLACE WHERE POSSIBLE.

NO	DATE	CLASS REV	ADC	DESCRIPTION	DWN	DES	CHKD	SUB	APP

AECOM

RLWTF-UP LOW LEVEL WASTE SUBPROJECT

CAB-101 PANEL LAYOUT

BLDG. 230 TA-50

SUBMITTED MANNY TARIN

APPROVED FOR RELEASE ED ARTIGLIA

DRAWN V DAVISON

DESIGN S MOORE

CHECKED G MOE

DATE 5/6/14

Los Alamos NATIONAL LABORATORY PO Box 1663 Los Alamos, New Mexico 87545

SHEET E-5110B

346 OF 434

CLASSIFICATION REVIEWER DATE

PROJECT ID 100761

DRAWING NO C55864

REV 0

EUGENE DAVID MOE NEW MEXICO 21389 PROFESSIONAL ENGINEER 5/6/14

File Location: P:\RLWTF LOW-LEVEL WASTE FACILITY\500 CAD\C55894 MAIN BUILDING\SHEETS\18 ELECTRICAL\55864-E-5110-R0.DWG
Plotted By: MOORE, STEPHEN Plot Date: Monday, May 05, 2014

12297

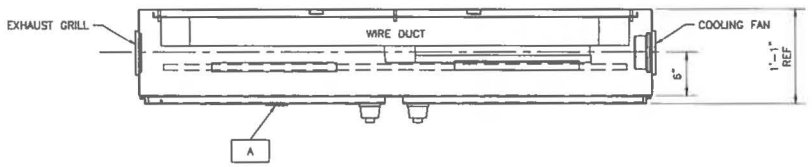

TOP VIEW

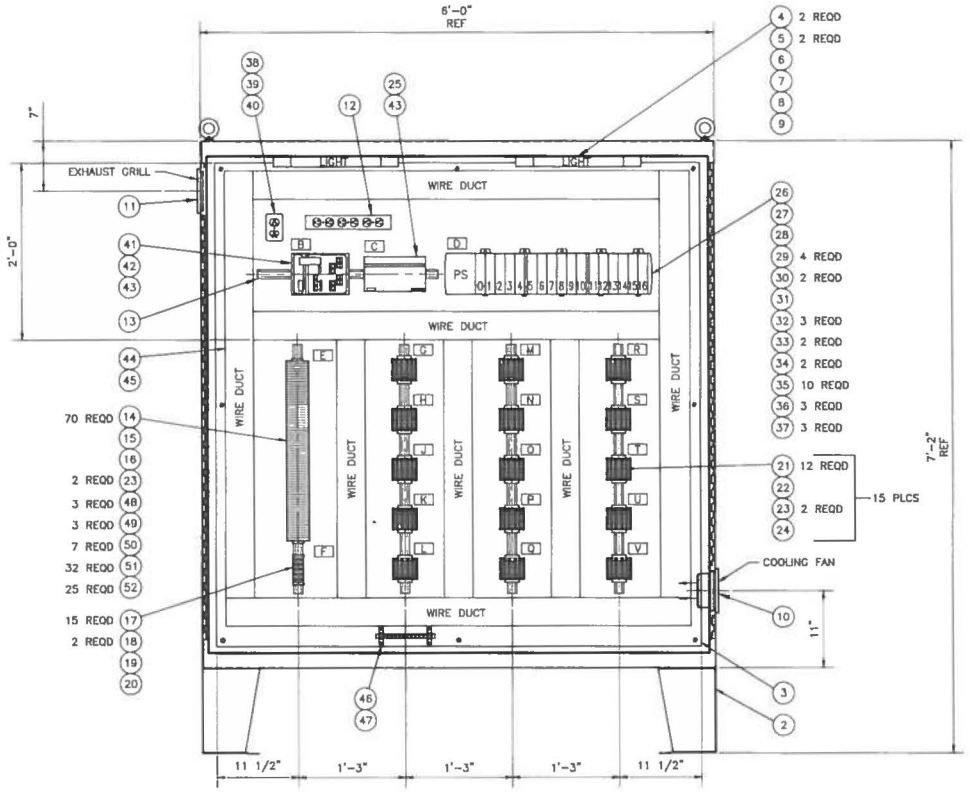

FRONT VIEW

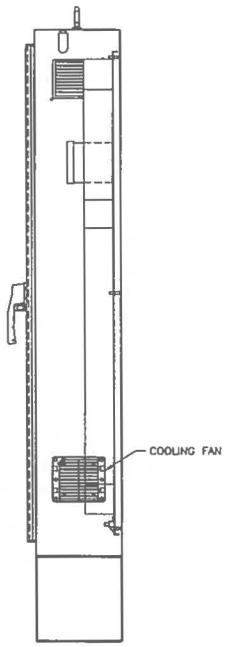

SIDE VIEW

(1) CAB-102

(1/E-1101) (1/E-1130) CAB-102 DETAIL (DOORS NOT SHOWN)

4" 0 6" 1'
1 1/2"=1'-0"

GENERAL NOTES

1. THIS SHEET IS NOT 24"X36", THEN IT IS A REDUCED SIZE PLOT. USE THE GRAPHIC SCALE ACCORDINGLY.
2. EQUIPMENT SHALL BE INSTALLED PER MANUFACTURER'S INSTRUCTIONS USING THE APPROPRIATE HARDWARE.
3. ALL WIRES AND CABLE SHALL BE LABELED AT BOTH TERMINATIONS.
4. ENCLOSURE AND ENCLOSURE DOORS SHALL BE ATTACHED TO GROUND.
5. SEE SHEET E-5111B FOR PARTS LIST/MATERIAL LIST AND NAMEPLATE ENGRAVING SCHEDULE.
6. SEE SHEET E-6151 FOR I/O SLOT ASSIGNMENTS.
7. SEE SHEET E-6167A THROUGH E-6167K FOR PANEL TERMINATION.
8. SEE SHEET E-6172 FOR INSTRUMENT ELECTRICAL DISTRIBUTION.

NO	DATE	CLASS REV	ADC	DESCRIPTION	DWN	DES	CHKD	SUB	APP

AECOM

RLWTF-UP LOW LEVEL WASTE SUBPROJECT

CAB-102 PANEL LAYOUT

DRAWN	V DAVISON
DESIGN	S MOORE
CHECKED	G MOE
DATE	5/6/14

BLDG. 230 TA-50

SUBMITTED MANNY TARIN

APPROVED FOR RELEASE ED ARTIGLIA

Los Alamos NATIONAL LABORATORY PO Box 1663 Los Alamos, New Mexico 87545

SHEET E-5111A

347 OF 434

CLASSIFICATION REVIEWER DATE

PROJECT ID 100761

DRAWING NO C55864

REV 0

File Location: P:\RLWTF LOW-LEVEL WASTE FACILITY\300 CAD\C55864 MAIN BUILDING\SHEETS\10 ELECTRICAL\155864-E-5111A-R0.DWG
Plotted By: MOORE, STEPHEN Plot Date: Monday, May 05, 2014

85321

PARTS LIST/MATERIAL LIST

QTY REQD	PARTS / DWG NUMBER	NOMENCLATURE/DESCRIPTION	MATERIAL/REFERENCE	SHEET	ITEM NO.
X	-010	CAB-102 CABINET			1
1	A74H7212LP3PT OR APPROVED EQUAL	ENCLOSURE FREE STANDING 74"x72"x12" NEMA TYPE 4, TWO DOOR, FLOOR STANDS	HOFFMAN		2
1	A72P72 OR APPROVED EQUAL	BACK PANEL 68" X 68"	HOFFMAN		3
2	LV120V18	18" FLUORESCENT ENCLOSURE LIGHT	HOFFMAN		4
2	1254-6Y	18" FLUORESCENT BULB	HOFFMAN		5
1	LF120VCORD	FLUORESCENT LIGHT POWER CORD	HOFFMAN		6
1	ALFSWD	DOOR ACTIVATED SWITCH	HOFFMAN		7
1	LGCABLE24	GANGING CABLE, 24"	HOFFMAN		8
1	LDSWITCH18	DOOR SWITCH CABLE, 18"	HOFFMAN		9
1	TFP41	COOLING FAN PACKAGE, 4" FAN, AND TYPE 1 FILTER	HOFFMAN		10
1	TEP4	EXHAUST GRILL & FILTER, TYPE 1	HOFFMAN		11
1	DP1N120615	POWER OUTLET STRIP, 6 RECEPTACLES	HOFFMAN		12
AR	199-DR1 OR APPROVED EQUAL	RAIL, MOUNTING, STEEL	ALLEN-BRADLEY		13
70	1492-H6	FUSE BLOCK, 300V, 12A MAX	ALLEN-BRADLEY		14
1	1492-N37	END BARRIER	ALLEN-BRADLEY		15
AR	1492-N49	SIDE JUMPER, FANNING STRIP, 10 POLE	ALLEN-BRADLEY		16
15	1492-HM1BL	TERMINAL BLOCK, 600V, 30A MAX	ALLEN-BRADLEY		17
2	1492-EAH35	END ANCHOR	ALLEN-BRADLEY		18
1	1492-NM36	END BARRIER	ALLEN-BRADLEY		19
AR	1492-N39	SIDE JUMPER, FANNING STRIP, 50 POLE	ALLEN-BRADLEY		20
180	1492-JT3M OR APPROVED EQUAL	TERMINAL, 300V, 3 LEVEL/3 CIRCUIT, WITH GROUND POINT	ALLEN-BRADLEY		21
15	1492-EBJ3TM OR APPROVED EQUAL	END BARRIER	ALLEN-BRADLEY		22
32	1492-EAHJ35 OR APPROVED EQUAL	END ANCHOR	ALLEN-BRADLEY		23
AR	1492-SJ6A-50	INSULATED SIDE JUMPER, 50 POLE	ALLEN-BRADLEY		24
1	1606XL480E	POWER SUPPLY, 480W, 24-28V	ALLEN-BRADLEY		25
1	1756-A17	17 SLOT CONTROLOGIX CHASSIS	ALLEN-BRADLEY		26
1	1756-PA75	85-255V AC POWER SUPPLY (5V@13A)	ALLEN-BRADLEY		27
1	1756-ENBT	ETHERNET BRIDGE MODULE	ALLEN-BRADLEY		28
4	1756-IB16I	10-30VDC ISOLATED INPUT 16 PTS (36 PIN)	ALLEN-BRADLEY		29
2	1756-OB16I	10-30VDC ISOLATED OUTPUT 16 PTS (36 PIN)	ALLEN-BRADLEY		30
1	1756-OW16I	N.O. ISOLATED RELAY OUTPUT 16 PTS (36 PIN)	ALLEN-BRADLEY		31
3	1756-IF16	ANALOG INPUT CURRENT/VOLTAGE 16PTS (36 PIN)	ALLEN-BRADLEY		32
2	1756-OF8	ANALOG OUTPUT CURRENT/VOLTAGE 8PTS (20 PIN)	ALLEN-BRADLEY		33
2	1756-IR16I	ISOLATED RTD INPUT 8 PTS (20 PIN)	ALLEN-BRADLEY		34
10	1756-TBCH	36 PIN SCREW CLAMP BLOCK WITH STANDARD HOUSING	ALLEN-BRADLEY		35
3	1756-TBNH	20 PIN NEMA SCREW CLAMP BLOCK	ALLEN-BRADLEY		36
3	1756-N2	EMPTY SLOT FILLER CARD	ALLEN-BRADLEY		37
1	5262G	DUPLEX RECEPTACLE, NEMA 5-15A, GRAY	HUBBELL		38
1	660	HANDY BOX, 4" X 2" X 1-7/8"	RACO		39
1	864	HANDY BOX COVER, DUPLEX RECEPTACLE	RACO		40

1	IE-3000-8TC	8-PORT 10/100 ETHERNET SWITCH	CISCO		41
1	PWR-IE3000-AC	POWER CONVERTER	CISCO		42
2	5625.072.1731	POWER CORD, 5-15P TO ROJ, 18/3, 6FT	AMERICORD		43
AR	G4X4WH6 OR APPROVED EQUAL	WIRE DUCT, WIDE SLOT, WHITE, 4.25" X 4.1"	PANDUIT		44
AR	C4WH6 OR APPROVED EQUAL	COVER, WHITE	PANDUIT		45
1	UGB2/0-414-12	GROUNDING BAR, 12 PORT	PANDUIT		46
1	UGB-B-SO	BONDING STAND-OFF	PANDUIT		47
3		FUSE, 5.0A	--		48
3		FUSE, 2.0A	--		49
7		FUSE, 0.5A	--		50
32		FUSE, 0.1A	--		51
25		FUSE, 1.0A	--		52

NAMEPLATE ENGRAVING SCHEDULE

ITEM	SIZE	CHAR SIZE	ENGRAVING
A	3" W x 1" H	3/8"	CAB-102
B	3" W x 1" H	3/8"	SW4
C	3" W x 1" H	3/8"	PS1
D	3" W x 1" H	3/8"	NODE 5
E	1" W x 0.5" H	1/4"	PB1
F	1" W x 0.5" H	1/4"	RTN1
G	1" W x 0.5" H	1/4"	TB1
H	1" W x 0.5" H	1/4"	TB2
J	1" W x 0.5" H	1/4"	TB3
K	1" W x 0.5" H	1/4"	TB4
L	1" W x 0.5" H	1/4"	TB5
M	1" W x 0.5" H	1/4"	TB6
N	1" W x 0.5" H	1/4"	TB7
O	1" W x 0.5" H	1/4"	TB8
P	1" W x 0.5" H	1/4"	TB9
Q	1" W x 0.5" H	1/4"	TB10
R	1" W x 0.5" H	1/4"	TB11
S	1" W x 0.5" H	1/4"	TB12
T	1" W x 0.5" H	1/4"	TB13
U	1" W x 0.5" H	1/4"	TB14
V	1" W x 0.5" H	1/4"	TB15

GENERAL NOTES

1. NAMEPLATE SHALL BE 1/16" THK MATTE FINISH LAMINATED PLASTIC WHITE SURFACE/BLACK CORE. BOND IN PLACE WHERE POSSIBLE.

NO	DATE	CLASS REV	ADC	DESCRIPTION	DWN	DES	CHKD	SUB	APP

AECOM

RLWTF-UP LOW LEVEL WASTE SUBPROJECT

CAB-102 PANEL LAYOUT

BLDG. 230 TA-50

DRAWN	V DAVISON
DESIGN	S MOORE
CHECKED	G MOE
DATE	5/8/14

SUBMITTED MANNY TARIN

APPROVED FOR RELEASE ED ARTIGLIA

Los Alamos NATIONAL LABORATORY PO Box 1663 Los Alamos, New Mexico 87545

SHEET E-5111B

348 OF 434

CLASSIFICATION | REVIEWER | DATE

PROJECT ID 100761 | DRAWING NO C55864 | REV 0

EUGENE DAVID MOE NEW MEXICO 21369 PROFESSIONAL ENGINEER 5/21/14

File Location: P:\RLWTF LOW-LEVEL WASTE FACILITY\300 CAD\C55864 MAIN BUILDING\SHEETS\18 ELECTRICAL\55864-E-5111B-RD.DWG
Plotted By: MOORE, STEPHEN Plot Date: Monday, May 05, 2014

12399

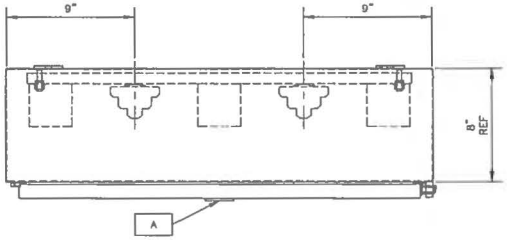

TOP VIEW

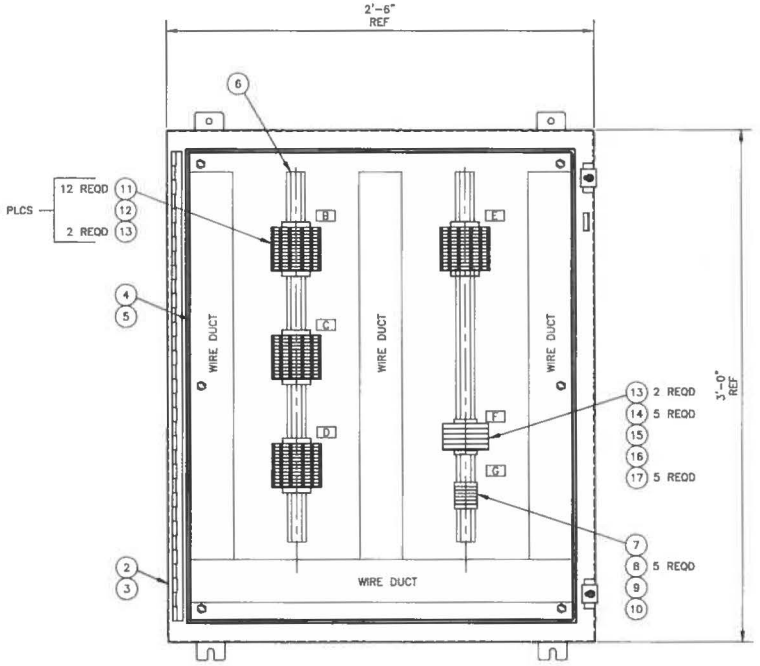

FRONT VIEW

1 IJB-101

1 E-1130 IJB-101 DETAIL (DOOR NOT SHOWN)

3"=1'-0"

PARTS LIST/MATERIAL LIST

QTY	PARTS / DASH NUMBER	NOMENCLATURE/DESCRIPTION	MATERIAL/REFERENCE	SHEET	ITEM NO.
X	-010	IJB-101 INSTRUMENT JUNCTION BOX			1
1	A36300BLP OR APPROVED EQUAL	ENCLOSURE, 36"x30"x 8" NEMA TYPE 4, SINGLE DOOR	HOFFMAN		2
1	A36P30 OR APPROVED EQUAL	BACK PANEL, 33" X 27"	HOFFMAN		3
AR	G3X3WH6 OR APPROVED EQUAL	WIREDUCT, WIDE SLOT, WHITE, 3.25" X 3.1"	PANDUIT		4
AR	C3WH6 OR APPROVED EQUAL	COVER, WHITE	PANDUIT		5
AR	199-DR1 OR APPROVED EQUAL	RAIL, MOUNTING, STEEL	ALLEN-BRADLEY		6
2	1492-EAH35	END ANCHOR	ALLEN-BRADLEY		7
5	1492-HM1BL	TERMINAL BLOCK, 600V, 30A	ALLEN-BRADLEY		8
1	1492-NM36	END BARRIER	ALLEN-BRADLEY		9
AR	1492-N39	SIDE JUMPER, FANNING STRIP, 50 POLE	ALLEN-BRADLEY		10
48	1492-JT3M OR APPROVED EQUAL	TERMINAL, 300V, 3 LEVEL/3 CIRCUIT, WITH GROUND POINT	ALLEN-BRADLEY		11
4	1492-EBJ3TM OR APPROVED EQUAL	END BARRIER	ALLEN-BRADLEY		12
10	1492-EAHJ35 OR APPROVED EQUAL	END ANCHOR	ALLEN-BRADLEY		13
5	1492-H6	FUSE BLOCK, 300V, 12A MAX	ALLEN-BRADLEY		14
1	1492-N37	END BARRIER	ALLEN-BRADLEY		15
AR	1492-N49	SIDE JUMPER, FANNING STRIP, 10 POLE	ALLEN-BRADLEY		16
5		FUSE, 1A	--		17

NAMEPLATE ENGRAVING SCHEDULE

ITEM	SIZE	CHAR SIZE	ENGRAVING
A	3" W x 1" H	3/8"	IJB-101
B	1" W x 0.5" H	1/4"	TB1
C	1" W x 0.5" H	1/4"	TB2
D	1" W x 0.5" H	1/4"	TB3
E	1" W x 0.5" H	1/4"	TB4
F	1" W x 0.5" H	1/4"	PB1
G	1" W x 0.5" H	1/4"	RTN1

GENERAL NOTES:

1. EQUIPMENT SHALL BE INSTALLED PER MANUFACTURER'S INSTRUCTIONS USING THE APPROPRIATE HARDWARE.
2. NAMEPLATE SHALL BE 1/16" THK MATTE FINISH LAMINATED PLASTIC WHITE SURFACE/BLACK CORE. BOND IN PLACE WHERE POSSIBLE.
3. ALL WIRES AND CABLE SHALL BE LABELED AT BOTH TERMINATIONS.
4. SEE SHEET E-6155 FOR WIRING TERMINATIONS.
5. IF THIS SHEET IS NOT 24"X36", THEN IT IS A REDUCED SIZE PLOT. USE THE GRAPHIC SCALE ACCORDINGLY.

NO	DATE	CLASS REV	ADC	DESCRIPTION	DWN	DES	CHKD	SUB	APP

AECOM

RLWTF-UP LOW LEVEL WASTE SUBPROJECT

IJB-101 PANEL LAYOUT

DRAWN	V DAVISON
DESIGN	S MOORE
CHECKED	G MOE
DATE	5/8/14

BLDG. 230 TA-50

SUBMITTED MANNY TARIN

APPROVED FOR RELEASE ED ARTIGLIA

Los Alamos NATIONAL LABORATORY PO Box 1663 Los Alamos, New Mexico 87545

SHEET E-5115

349 OF 434

CLASSIFICATION REVIEWER DATE

PROJECT ID 100761

DRAWING NO C55864

REV 0

EUGENE DAVID MOE NEW MEXICO 21388 PROFESSIONAL ENGINEER

File Location: P:\RLWTF LOW-LEVEL WASTE FACILITY\300 CAD\C55864 MAIN BUILDING\SHEETS\10 ELECTRICAL\55864-E-5115-R0.DWG
Plotted By: MOORE, STEPHEN Plot Date: Monday, May 05, 2014

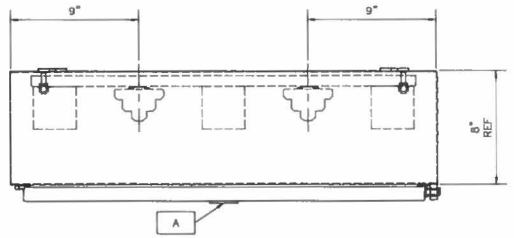

TOP VIEW

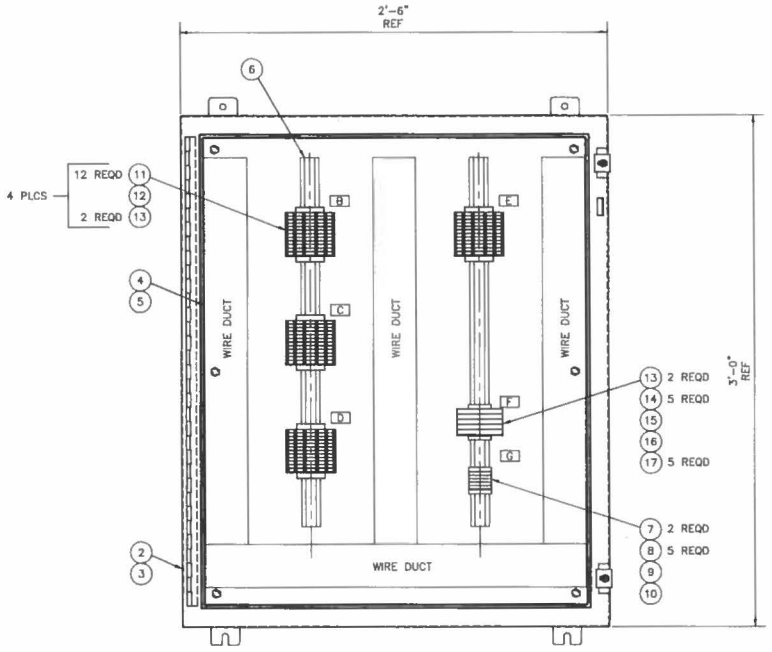

FRONT VIEW

1 IJB-102

1 / E-1130 IJB-102 DETAIL (DOOR NOT SHOWN)

3"=1'-0"

PARTS LIST/MATERIAL LIST

QTY. REQD	PARTS / DASH NUMBER	NOMENCLATURE/DESCRIPTION	MATERIAL/REFERENCE	SHEET	ITEM NO.
X	-010	IJB-102 INSTRUMENT JUNCTION BOX			1
1	A36300BLP OR APPROVED EQUAL	ENCLOSURE, 36"x30"x 8" NEMA TYPE 4, SINGLE DOOR	HOFFMAN		2
1	A36P30 OR APPROVED EQUAL	BACK PANEL, 33" X 27"	HOFFMAN		3
AR	G3X3WH6 OR APPROVED EQUAL	WIREWAY, WIDE SLOT, WHITE, 3.25" X 3.1"	PANDUIT		4
AR	C3WH6 OR APPROVED EQUAL	COVER, WHITE	PANDUIT		5
AR	199-DR1 OR APPROVED EQUAL	RAIL, MOUNTING, STEEL	ALLEN-BRADLEY		6
2	1492-EAH35	END ANCHOR	ALLEN-BRADLEY		7
5	1492-HM1BL	TERMINAL BLOCK, 600V, 30A	ALLEN-BRADLEY		8
1	1492-NM36	END BARRIER	ALLEN-BRADLEY		9
AR	1492-NJ9	SIDE JUMPER, FANNING STRIP, 50 POLE	ALLEN-BRADLEY		10
48	1492-JT3M OR APPROVED EQUAL	TERMINAL, 300V, 3 LEVEL/3 CIRCUIT, WITH GROUND POINT	ALLEN-BRADLEY		11
4	1492-EBJ3TM OR APPROVED EQUAL	END BARRIER	ALLEN-BRADLEY		12
10	1492-EAHJ35 OR APPROVED EQUAL	END ANCHOR	ALLEN-BRADLEY		13
5	1492-H6	FUSE BLOCK, 300V, 12A MAX	ALLEN-BRADLEY		14
1	1492-N37	END BARRIER	ALLEN-BRADLEY		15
AR	1492-N49	SIDE JUMPER, FANNING STRIP, 10 POLE	ALLEN-BRADLEY		16
5		FUSE, 1A	--		17

NAMEPLATE ENGRAVING SCHEDULE

ITEM	SIZE	CHAR SIZE	ENGRAVING
A	3" W x 1" H	3/8"	IJB-102
B	1" W x 0.5" H	1/4"	TB1
C	1" W x 0.5" H	1/4"	TB2
D	1" W x 0.5" H	1/4"	TB3
E	1" W x 0.5" H	1/4"	TB4
F	1" W x 0.5" H	1/4"	PB1
G	1" W x 0.5" H	1/4"	RTN1

GENERAL NOTES:

1. EQUIPMENT SHALL BE INSTALLED PER MANUFACTURER'S INSTRUCTIONS USING THE APPROPRIATE HARDWARE.
2. NAMEPLATE SHALL BE 1/16" THK MATTE FINISH LAMINATED PLASTIC WHITE SURFACE/BLACK CORE. BOND IN PLACE WHERE POSSIBLE.
3. ALL WIRES AND CABLE SHALL BE LABELED AT BOTH TERMINATIONS.
4. SEE SHEET E-6156 FOR WIRING TERMINATIONS.
5. IF THIS SHEET IS NOT 24"X36", THEN IT IS A REDUCED SIZE PLOT. USE THE GRAPHIC SCALE ACCORDINGLY.

NO	DATE	CLASS REV	ADC	DESCRIPTION	DWN	DES	CHKD	SUB	APP

AECOM

RLWTF-UP LOW LEVEL WASTE SUBPROJECT

IJB-102 PANEL LAYOUT

BLDG. 230 TA-50

SUBMITTED MANNY TARIN

APPROVED FOR RELEASE ED ARTIGLIA

DRAWN V DAWSON 5/6/14

DESIGN S MOORE

CHECKED G MOE

DATE 5/6/14

Los Alamos NATIONAL LABORATORY PO Box 1663 Los Alamos, New Mexico 87545

CLASSIFICATION REVIEWER DATE

PROJECT ID 100761

DRAWING NO C55864

SHEET E-5116

350 OF 434

REV 0

EUGENE DAVID MOE NEW MEXICO 21389 REGISTERED PROFESSIONAL ENGINEER 5/6/14

File Location: P:\RLWTF LOW-LEVEL WASTE FACILITY\000 CAD\C55864 MAIN BUILDING\SHEETS\18 ELECTRICAL\55864-E-5116-R0.DWG
Plotted By: MOE, STEPHEN Plot Date: Monday, May 05, 2014

Template: 11x17

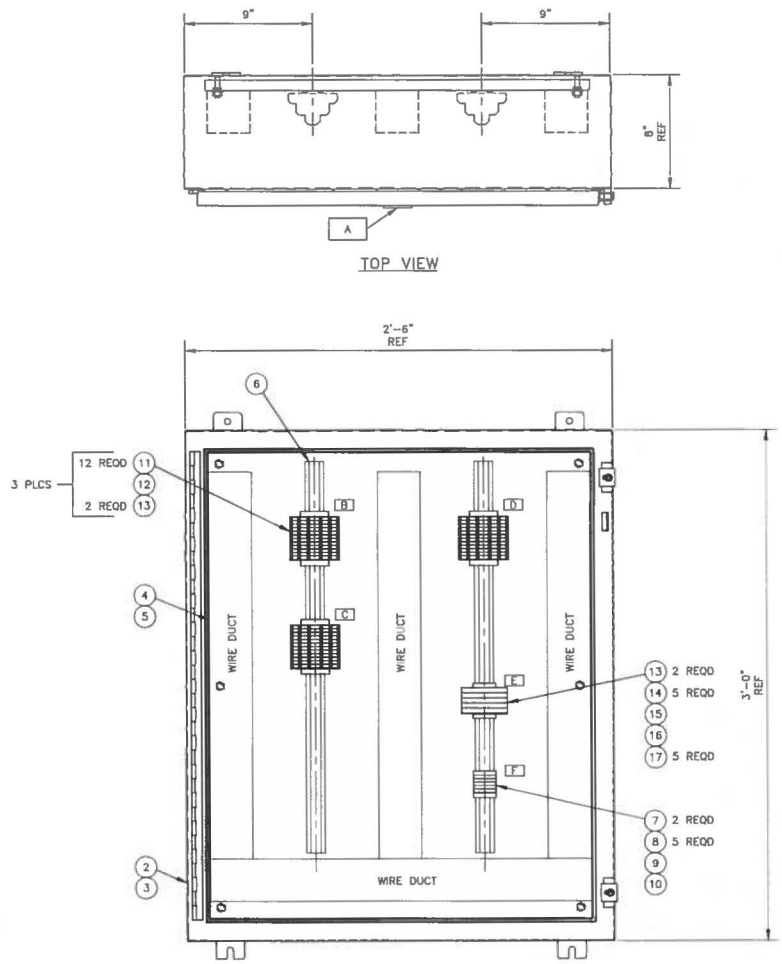

1 IJB-103

1 E-1130 IJB-103 DETAIL (DOOR NOT SHOWN)

0 1" 2" 4" 6" 8"
3"=1'-0"

PARTS LIST/MATERIAL LIST

QTY REQD	PARTS / DASH NUMBER	NOMENCLATURE/DESCRIPTION	MATERIAL/REFERENCE	SHEET	ITEM NO.
X	-010	IJB-103 INSTRUMENT JUNCTION BOX			1
1	A363008LP OR APPROVED EQUAL	ENCLOSURE, 36"x30"x 8" NEMA TYPE 4, SINGLE DOOR	HOFFMAN		2
1	A36P30 OR APPROVED EQUAL	BACK PANEL, 33" X 27"	HOFFMAN		3
AR	G3X3WH6 OR APPROVED EQUAL	WIREWAY, WIDE SLOT, WHITE, 3.25" X 3.1"	PANDUIT		4
AR	C3WH6 OR APPROVED EQUAL	COVER, WHITE	PANDUIT		5
AR	199-DR1 OR APPROVED EQUAL	RAIL, MOUNTING, STEEL	ALLEN-BRADLEY		6
2	1492-EAH35	END ANCHOR	ALLEN-BRADLEY		7
5	1492-HM1BL	TERMINAL BLOCK, 600V, 30A	ALLEN-BRADLEY		8
1	1492-NM36	END BARRIER	ALLEN-BRADLEY		9
AR	1492-N39	SIDE JUMPER, FANNING STRIP, 50 POLE	ALLEN-BRADLEY		10
36	1492-JT3M OR APPROVED EQUAL	TERMINAL, 300V, 3 LEVEL/3 CIRCUIT, WITH GROUND POINT	ALLEN-BRADLEY		11
3	1492-EBJ3TM OR APPROVED EQUAL	END BARRIER	ALLEN-BRADLEY		12
8	1492-EAHJ35 OR APPROVED EQUAL	END ANCHOR	ALLEN-BRADLEY		13
5	1492-H6	FUSE BLOCK, 300V, 12A MAX	ALLEN-BRADLEY		14
1	1492-N37	END BARRIER	ALLEN-BRADLEY		15
AR	1492-N49	SIDE JUMPER, FANNING STRIP, 10 POLE	ALLEN-BRADLEY		16
5		FUSE, 1A	--		17

NAMEPLATE ENGRAVING SCHEDULE

ITEM	SIZE	CHAR SIZE	ENGRAVING
A	3" W x 1" H	3/8"	IJB-103
B	1" W x 0.5" H	1/4"	TB1
C	1" W x 0.5" H	1/4"	TB2
D	1" W x 0.5" H	1/4"	TB3
E	1" W x 0.5" H	1/4"	PB1
F	1" W x 0.5" H	1/4"	RTN1

GENERAL NOTES:

1. EQUIPMENT SHALL BE INSTALLED PER MANUFACTURER'S INSTRUCTIONS USING THE APPROPRIATE HARDWARE.
2. NAMEPLATE SHALL BE 1/16" THK MATTE FINISH LAMINATED PLASTIC WHITE SURFACE/BLACK CORE. BOND IN PLACE WHERE POSSIBLE.
3. ALL WIRES AND CABLE SHALL BE LABELED AT BOTH TERMINATIONS.
4. SEE SHEET E-6157 FOR WIRING TERMINATIONS.
5. IF THIS SHEET IS NOT 24"X36", THEN IT IS A REDUCED SIZE PLOT. USE THE GRAPHIC SCALE ACCORDINGLY.

NO	DATE	CLASS REV	ADC	DESCRIPTION	DWN	DES	CHKD	SUB	APP

AECOM

RLWTF-UP LOW LEVEL WASTE SUBPROJECT

IJB-103 PANEL LAYOUT

BLDG. 230 TA-50

DRAWN	V DAVISON
DESIGN	S MOORE
CHECKED	G MOE
DATE	5/8/14

SUBMITTED MANNY TARIN

APPROVED FOR RELEASE ED ARTIGLIA

Los Alamos NATIONAL LABORATORY PO Box 1663 Los Alamos, New Mexico 87545

SHEET E-5117

351 OF 434

CLASSIFICATION | REVIEWER | DATE

PROJECT ID 100761 | DRAWING NO C55864 | REV 0

EUGENE DAVID MOE NEW MEXICO 21369 PROFESSIONAL ENGINEER

File Location: P:\RLWTF LOW-LEVEL WASTE FACILITY\500 CAD\C55864 MAIN BUILDING\SHEETS\18 ELECTRICAL\55864-E-5117-RQ.DWG
Plotted By: MOORE, STEPHEN Plot Date: Monday, May 05, 2014

: 12402

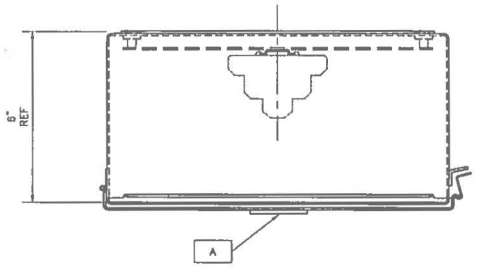

TOP VIEW

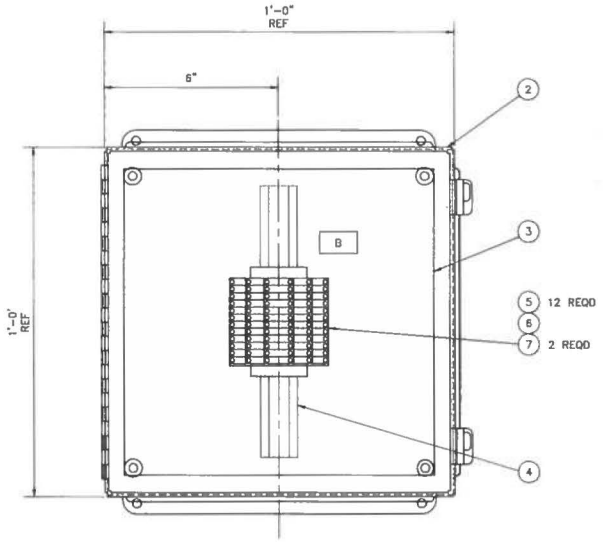

FRONT VIEW

1 IJB-104

1 E-1001 IJB-104 DETAIL (DOOR NOT SHOWN)

0 1" 2" 4" 6" 8"
3"=1'-0"

PARTS LIST/MATERIAL LIST

QTY REQD	PARTS / DWG NUMBER	NOMENCLATURE/DESCRIPTION	MATERIAL/REFERENCE	SHEET	ITEM NO.
X	-010	IJB-104 INSTRUMENT JUNCTION BOX			1
1	A1212CHNF OR APPROVED EQUAL	ENCLOSURE, 12" x 12" x 6" NEMA TYPE 4, SINGLE DOOR	HOFFMAN		2
1	A12P12 OR APPROVED EQUAL	BACK PANEL, 10.75" x 10.88"	HOFFMAN		3
AR	199-DR1 OR APPROVED EQUAL	RAIL, MOUNTING, STEEL	ALLEN-BRADLEY		4
12	1492-JT3M OR APPROVED EQUAL	TERMINAL, 300V, 3 LEVEL/3 CIRCUIT, WITH GROUND POINT	ALLEN-BRADLEY		5
1	1492-EBJ3TM OR APPROVED EQUAL	END BARRIER	ALLEN-BRADLEY		6
2	1492-EAHJ35 OR APPROVED EQUAL	END ANCHOR	ALLEN-BRADLEY		7

NAMEPLATE ENGRAVING SCHEDULE

ITEM	SIZE	CHAR SIZE	ENGRAVING
A	3" W x 1" H	3/8"	IJB-104
B	1" W x 0.5" H	1/4"	TB1

GENERAL NOTES:

1. EQUIPMENT SHALL BE INSTALLED PER MANUFACTURER'S INSTRUCTIONS USING THE APPROPRIATE HARDWARE.
2. NAMEPLATE SHALL BE 1/16" THK MATTE FINISH LAMINATED PLASTIC WHITE SURFACE/BLACK CORE. BOND IN PLACE WHERE POSSIBLE.
3. ALL WIRES AND CABLE SHALL BE LABELED AT BOTH TERMINATIONS.
4. SEE SHEET E-6158 FOR WIRING TERMINATIONS.
5. IF THIS SHEET IS NOT 24"X36", THEN IT IS A REDUCED SIZE PLOT. USE THE GRAPHIC SCALE ACCORDINGLY.

NO	DATE	CLASS REV	ADC	DESCRIPTION	DWN	DES	CHKD	SUB	APP

AECOM

RLWTF-UP LOW LEVEL WASTE SUBPROJECT

IJB-104 PANEL LAYOUT

DRAWN	V DAVISON
DESIGN	S MOORE
CHECKED	G MOE
DATE	5/8/14

BLDG. 230 TA-50

SUBMITTED MANNY TARIN | APPROVED FOR RELEASE ED ARTIOLA

Los Alamos NATIONAL LABORATORY PO Box 1663 Los Alamos, New Mexico 87545

SHEET E-5118

352 OF 434

CLASSIFICATION | REVIEWER | DATE

PROJECT ID 100761 | DRAWING NO C55864 | REV 0

EUGENE DAVID MOE NEW MEXICO 21389 PROFESSIONAL ENGINEER

File Location: P:\RLWTF LOW-LEVEL WASTE FACILITY\300 CAD\C55864 MAIN BUILDING\SHEETS\15 ELECTRICAL\55864-E-5118-RO.DWG
Plotted By: MOE, EUGENE Plot Date: Monday, May 05, 2014

12103

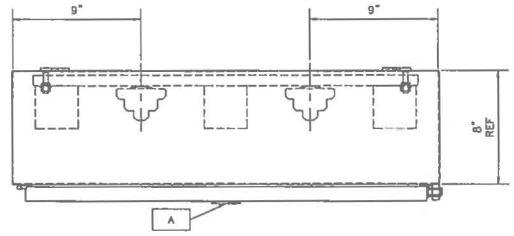

TOP VIEW

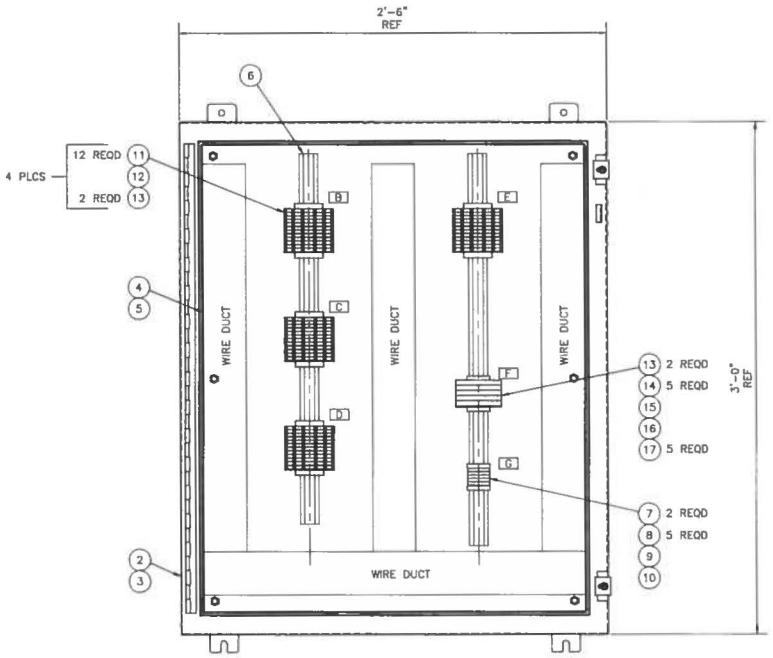

FRONT VIEW

1 IJB-105

1 E-1130 IJB-105 DETAIL (DOOR NOT SHOWN)

3"=1'-0"

PARTS LIST/MATERIAL LIST

QTY EACH	PARTS / DASH NUMBER	NOMENCLATURE/DESCRIPTION	MATERIAL/REFERENCE	SHEET	ITEM NO.
X	-010	IJB-105 INSTRUMENT JUNCTION BOX			1
1	A363008LP OR APPROVED EQUAL	ENCLOSURE, 36"x30"x 8" NEMA TYPE 4, SINGLE DOOR	HOFFMAN		2
1	A36P30 OR APPROVED EQUAL	BACK PANEL, 33" X 27"	HOFFMAN		3
AR	G3X3WH6 OR APPROVED EQUAL	WIREWAY, WIDE SLOT, WHITE, 3.25" X 3.1"	PANDUIT		4
AR	C3WH6 OR APPROVED EQUAL	COVER, WHITE	PANDUIT		5
AR	199-DR1 OR APPROVED EQUAL	RAIL, MOUNTING, STEEL	ALLEN-BRADLEY		6
2	1492-EAHJ35	END ANCHOR	ALLEN-BRADLEY		7
5	1492-HM1BL	TERMINAL BLOCK, 600V, 30A	ALLEN-BRADLEY		8
1	1492-NM36	END BARRIER	ALLEN-BRADLEY		9
AR	1492-N39	SIDE JUMPER, FANNING STRIP, 50 POLE	ALLEN-BRADLEY		10
48	1492-JT3M OR APPROVED EQUAL	TERMINAL, 300V, 3 LEVEL/3 CIRCUIT, WITH GROUND POINT	ALLEN-BRADLEY		11
4	1492-EBJ3TM OR APPROVED EQUAL	END BARRIER	ALLEN-BRADLEY		12
10	1492-EAHJ35 OR APPROVED EQUAL	END ANCHOR	ALLEN-BRADLEY		13
5	1492-H6	FUSE BLOCK, 300V, 12A MAX	ALLEN-BRADLEY		14
1	1492-N37	END BARRIER	ALLEN-BRADLEY		15
AR	1492-N49	SIDE JUMPER, FANNING STRIP, 10 POLE	ALLEN-BRADLEY		16
5		FUSE, 1A	--		17

NAMEPLATE ENGRAVING SCHEDULE

ITEM	SIZE	CHAR SIZE	ENGRAVING
A	3" W x 1" H	3/8"	IJB-105
B	1" W x 0.5" H	1/4"	TB1
C	1" W x 0.5" H	1/4"	TB2
D	1" W x 0.5" H	1/4"	TB3
E	1" W x 0.5" H	1/4"	TB4
F	1" W x 0.5" H	1/4"	PB1
G	1" W x 0.5" H	1/4"	RTN1

GENERAL NOTES:

1. EQUIPMENT SHALL BE INSTALLED PER MANUFACTURER'S INSTRUCTIONS USING THE APPROPRIATE HARDWARE.
2. NAMEPLATE SHALL BE 1/16" THK MATTE FINISH LAMINATED PLASTIC WHITE SURFACE/BLACK CORE. BOND IN PLACE WHERE POSSIBLE.
3. ALL WIRES AND CABLE SHALL BE LABELED AT BOTH TERMINATIONS.
4. SEE SHEET E-6159 FOR WIRING TERMINATIONS.
5. IF THIS SHEET IS NOT 24"X36", THEN IT IS A REDUCED SIZE PLOT. USE THE GRAPHIC SCALE ACCORDINGLY.

NO	DATE	CLASS REV	ADC	DESCRIPTION	DWN	DES	CHKD	SUB	APP

AECOM

RLWTF-UP LOW LEVEL WASTE SUBPROJECT

IJB-105 PANEL LAYOUT

DRAWN V DAVISSON
DESIGN E-I S MOORE
CHECKED G MOE
DATE 5/8/14

BLDG. 230 TA-50

SUBMITTED MANNY TAREN

APPROVED FOR RELEASE ED ARTIGLIA

Los Alamos NATIONAL LABORATORY PO Box 1663 Los Alamos, New Mexico 87545

SHEET E-5119

353 OF 434

CLASSIFICATION REVIEWER DATE

PROJECT ID 100761

DRAWING NO C55864

REV 0

EUGENE DAVID MOE NEW MEXICO 21389 PROFESSIONAL ENGINEER 5/8/14

File Location: P:\RLWTF LOW-LEVEL WASTE FACILITY\300 DAS\C55864 MAIN BUILDING\SHEETS\10 ELECTRICAL\55864-E-5119-R0.DWG
Plotted By: MOORE, STEPHEN Plot Date: Monday, May 05, 2014

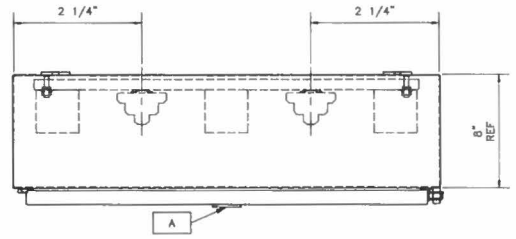

TOP VIEW

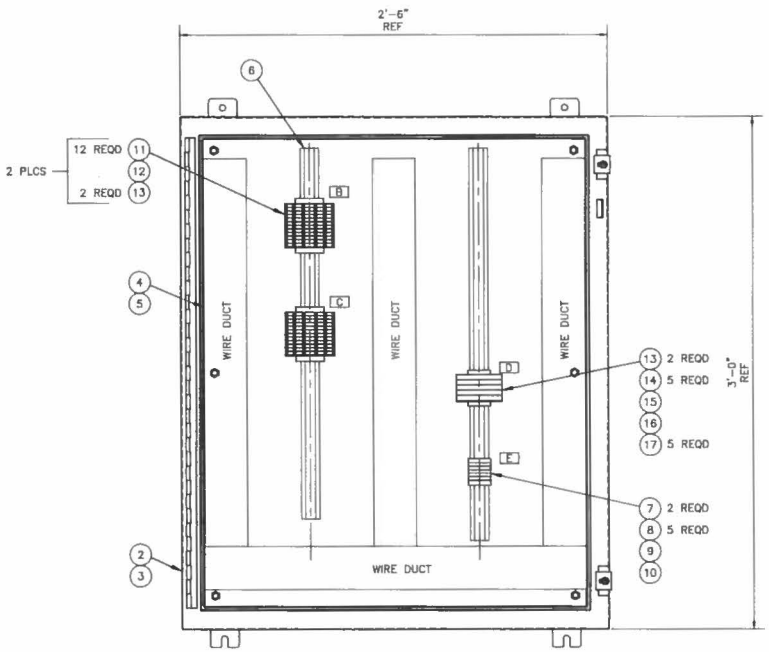

FRONT VIEW

1 IJB-106

1 (E-1130) IJB-106 DETAIL (DOOR NOT SHOWN)

0 1" 2" 4" 6" 8"
3"=1'-0"

PARTS LIST/MATERIAL LIST

QTY REQD	PARTS / DWG NUMBER	NOMENCLATURE/DESCRIPTION	MATERIAL/REFERENCE	SHEET	ITEM NO.
X	-010	IJB-108 INSTRUMENT JUNCTION BOX			1
1	A363008LP OR APPROVED EQUAL	ENCLOSURE, 36"x30"x 8" NEMA TYPE 4, SINGLE DOOR	HOFFMAN		2
1	A36P30 OR APPROVED EQUAL	BACK PANEL, 33" X 27"	HOFFMAN		3
AR	G3X3WH6 OR APPROVED EQUAL	WIREWAY, WIDE SLOT, WHITE, 3.25" X 3.1"	PANDUIT		4
AR	C3WH6 OR APPROVED EQUAL	COVER, WHITE	PANDUIT		5
AR	199-DR1 OR APPROVED EQUAL	RAIL, MOUNTING, STEEL	ALLEN-BRADLEY		6
2	1492-EAHJ35	END ANCHOR	ALLEN-BRADLEY		7
5	1492-HM1BL	TERMINAL BLOCK, 600V, 30A	ALLEN-BRADLEY		8
1	1492-NM36	END BARRIER	ALLEN-BRADLEY		9
AR	1492-N39	SIDE JUMPER, FANNING STRIP, 50 POLE	ALLEN-BRADLEY		10
24	1492-JT3M OR APPROVED EQUAL	TERMINAL, 300V, 3 LEVEL/3 CIRCUIT, WITH GROUND POINT	ALLEN-BRADLEY		11
2	1492-EBJ3TM OR APPROVED EQUAL	END BARRIER	ALLEN-BRADLEY		12
6	1492-EAHJ35 OR APPROVED EQUAL	END ANCHOR	ALLEN-BRADLEY		13
5	1492-H6	FUSE BLOCK, 300V, 12A MAX	ALLEN-BRADLEY		14
1	1492-N37	END BARRIER	ALLEN-BRADLEY		15
AR	1492-N49	SIDE JUMPER, FANNING STRIP, 10 POLE	ALLEN-BRADLEY		16
5		FUSE, 1A	--		17

NAMEPLATE ENGRAVING SCHEDULE

ITEM	SIZE	CHAR SIZE	ENGRAVING
A	3" W x 1" H	3/8"	IJB-106
B	1" W x 0.5" H	1/4"	TB1
C	1" W x 0.5" H	1/4"	TB2
D	1" W x 0.5" H	1/4"	PB1
E	1" W x 0.5" H	1/4"	RTN1

GENERAL NOTES:

1. EQUIPMENT SHALL BE INSTALLED PER MANUFACTURER'S INSTRUCTIONS USING THE APPROPRIATE HARDWARE.
2. NAMEPLATE SHALL BE 1/16" THK MATTE FINISH LAMINATED PLASTIC WHITE SURFACE/BLACK CORE. BOND IN PLACE WHERE POSSIBLE.
3. ALL WIRES AND CABLE SHALL BE LABELED AT BOTH TERMINATIONS.
4. SEE SHEET E-6160 FOR WIRING TERMINATIONS.
5. IF THIS SHEET IS NOT 24"X36", THEN IT IS A REDUCED SIZE PLOT. USE THE GRAPHIC SCALE ACCORDINGLY.

NO	DATE	CLASS REV	ADC	DESCRIPTION	DWN	DES	CHKD	SUB	APP

AECOM

RLWTF-UP LOW LEVEL WASTE SUBPROJECT

IJB-106 PANEL LAYOUT

DRAWN V DAVISON
DESIGN S MOORE
CHECKED G MOE
DATE 5/8/14

BLDG. 230 TA-50

SUBMITTED MANNY TARIN

APPROVED FOR RELEASE ED ARTIGLIA

Los Alamos NATIONAL LABORATORY PO Box 1663 Los Alamos, New Mexico 87545

SHEET E-5120
354 OF 434

CLASSIFICATION REVIEWER DATE

PROJECT ID 100761 DRAWING NO C55864 REV 0

EUGENE DAVID MOE NEW MEXICO 21368 PROFESSIONAL ENGINEER 5/8/14

File Location: P:\RLWTF LOW-LEVEL WASTE FACILITY\300 CAD\C55864 MAIN BUILDING\SHEETS\18 ELECTRICAL\55864-E-5120-R0.DWG
Plotted By: MOORE, STEPHEN Plot Date: Monday, May 05, 2014
121105

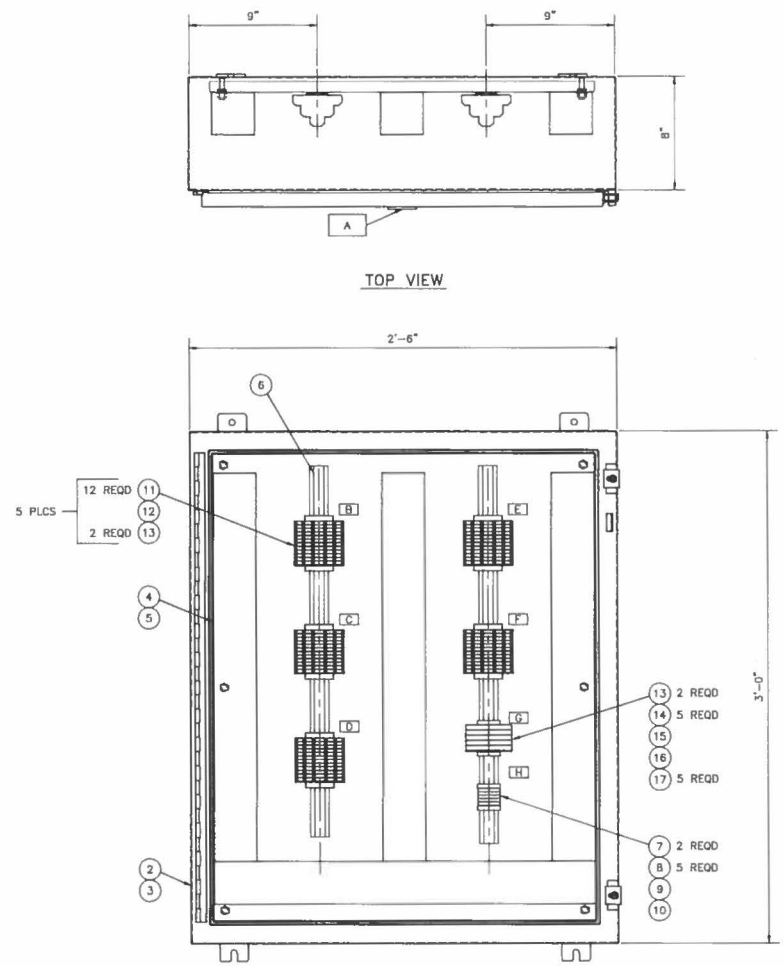

1 IJB-107

1 E-1130 IJB-107 DETAIL (DOOR NOT SHOWN)

0 1" 2" 4" 6" 8"
3"=1'-0"

PARTS LIST/MATERIAL LIST

QTY REQD	PARTS / DASH NUMBER	NOMENCLATURE/DESCRIPTION	MATERIAL/REFERENCE	SHEET	ITEM NO.
	-010	IJB-107 INSTRUMENT JUNCTION BOX			1
1	A363008LP OR APPROVED EQUAL	ENCLOSURE, 36"x30"x 8" NEMA TYPE 4, SINGLE DOOR	HOFFMAN		2
1	A36P30 OR APPROVED EQUAL	BACK PANEL, 33" X 27"	HOFFMAN		3
AR	G3X3WH6 OR APPROVED EQUAL	WIREWAY, WIDE SLOT, WHITE, 3.25" X 3.1"	PANDUIT		4
AR	C3WH6 OR APPROVED EQUAL	COVER, WHITE	PANDUIT		5
AR	199-DR1 OR APPROVED EQUAL	RAIL, MOUNTING, STEEL	ALLEN-BRADLEY		6
2	1492-EAH35	END ANCHOR	ALLEN-BRADLEY		7
5	1492-HM1BL	TERMINAL BLOCK, 600V, 30A	ALLEN-BRADLEY		8
1	1492-NM36	END BARRIER	ALLEN-BRADLEY		9
AR	1492-N39	SIDE JUMPER, FANNING STRIP, 50 POLE	ALLEN-BRADLEY		10
60	1492-JT3M OR APPROVED EQUAL	TERMINAL, 300V, 3 LEVEL/3 CIRCUIT, WITH GROUND POINT	ALLEN-BRADLEY		11
5	1492-EBJ3TM OR APPROVED EQUAL	END BARRIER	ALLEN-BRADLEY		12
10	1492-EAHJ35 OR APPROVED EQUAL	END ANCHOR	ALLEN-BRADLEY		13
5	1492-H6	FUSE BLOCK, 300V, 12A MAX	ALLEN-BRADLEY		14
1	1492-N37	END BARRIER	ALLEN-BRADLEY		15
AR	1492-N49	SIDE JUMPER, FANNING STRIP, 10 POLE	ALLEN-BRADLEY		16
5		FUSE, 1A	--		17

NAMEPLATE ENGRAVING SCHEDULE

ITEM	SIZE	CHAR SIZE	ENGRAVING
A	3" W x 1" H	3/8"	IJB-107
B	1" W x 0.5" H	1/4"	TB1
C	1" W x 0.5" H	1/4"	TB2
D	1" W x 0.5" H	1/4"	TB3
E	1" W x 0.5" H	1/4"	TB4
F	1" W x 0.5" H	1/4"	TB5
G	1" W x 0.5" H	1/4"	PB1
H	1" W x 0.5" H	1/4"	RTN1

GENERAL NOTES:

1. EQUIPMENT SHALL BE INSTALLED PER MANUFACTURER'S INSTRUCTIONS USING THE APPROPRIATE HARDWARE.
2. NAMEPLATE SHALL BE 1/16" THK MATTE FINISH LAMINATED PLASTIC WHITE SURFACE/BLACK CORE. BOND IN PLACE WHERE POSSIBLE.
3. ALL WIRES AND CABLE SHALL BE LABELED AT BOTH TERMINATIONS.
4. SEE SHEET E-6161A & E-6161B FOR WIRING TERMINATIONS.
5. IF THIS SHEET IS NOT 24"X36", THEN IT IS A REDUCED SIZE PLOT. USE THE GRAPHIC SCALE ACCORDINGLY.

NO	DATE	CLASS REV	ADC	DESCRIPTION	DWN	DES	CHKD	SUB	APP

AECOM

RLWTF-UP LOW LEVEL WASTE SUBPROJECT

IJB-107 PANEL LAYOUT

BLDG. 230 TA-50

DRAWN	V DAVISON
DESIGN	S MOORE
CHECKED	G MOE
DATE	5/8/14

SUBMITTED MANNY TARIN

APPROVED FOR RELEASE ED ARTIGLIA

Los Alamos NATIONAL LABORATORY PO Box 1663 Los Alamos, New Mexico 87545

SHEET E-5121

355 OF 434

CLASSIFICATION | REVIEWER | DATE

PROJECT ID 100761 | DRAWING NO C55864 | REV 0

EUGENE DAVID MOE NEW MEXICO 21369 PROFESSIONAL ENGINEER

File Location: P:\RLWTF LOW-LEVEL WASTE FACILITY\500 CAD\C55864 MAIN BUILDING\SHEETS\18 ELECTRICAL\55864-E-5121-R0.DWG
Plotted By: MOORE, STEPHEN Plot Date: Monday, May 05, 2014

90121 : 12106

GENERAL NOTES:

1. EQUIPMENT SHALL BE INSTALLED PER MANUFACTURER'S INSTRUCTIONS USING THE APPROPRIATE HARDWARE.
2. ALL WIRES AND CABLE SHALL BE LABELED AT BOTH TERMINATIONS.
3. ENCLOSURE AND ENCLOSURE DOORS SHALL BE ATTACHED TO GROUND.
4. SEE SHEET E-5129B FOR PARTS LIST/MATERIAL LIST AND NAMEPLATE ENGRAVING SCHEDULE.
5. SEE SHEET E-6149 FOR I/O SLOT ASSIGNMENTS.
6. SEE SHEET E-6165A THROUGH E-6165C FOR PANEL TERMINATION.
7. SEE SHEET E-6176 FOR INSTRUMENT ELECTRICAL DISTRIBUTION.
8. IF THIS SHEET IS NOT 24"X36", THEN IT IS A REDUCED SIZE PLOT. USE THE GRAPHIC SCALE ACCORDINGLY.

TOP VIEW

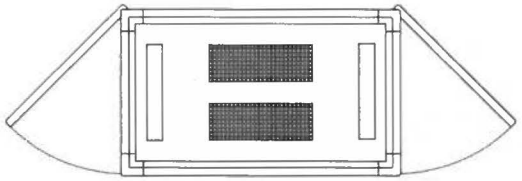

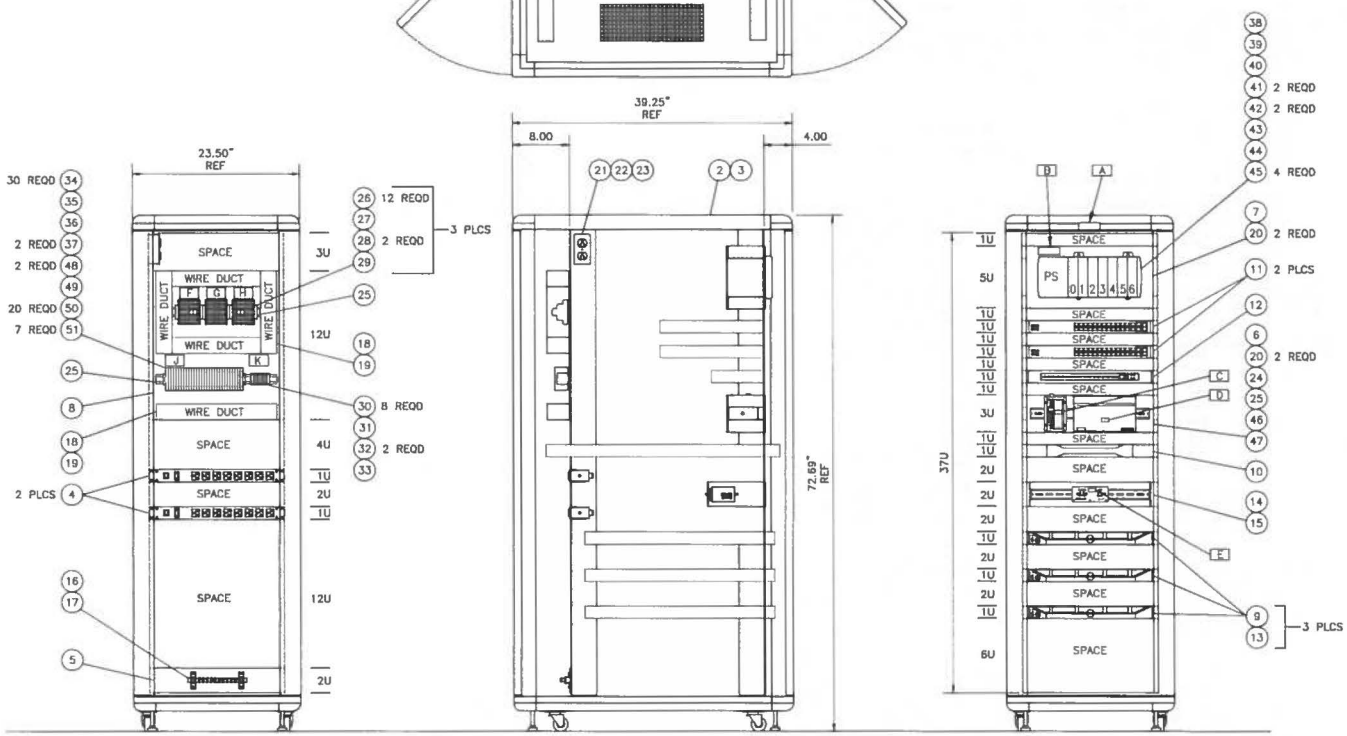

REAR VIEW | SIDE VIEW | FRONT VIEW

(1) CAB-100

(1/E-1102) (1/E-1130) CAB-100 DETAIL (DOORS AND SIDE PANEL NOT SHOWN)

1 1/2"=1'-0"

NO	DATE	CLASS REV	ADC	DESCRIPTION	DWN	DES	CHKD	SUB	APP

AECOM

RLWTF-UP LOW LEVEL WASTE SUBPROJECT

CAB-100 PANEL LAYOUT

DRAWN	V DAVISON	
DESIGN	S MOORE	
CHECKED	G MOE	
DATE	5/8/14	

BLDG. 230 TA-50

SUBMITTED MANNY TARIN

APPROVED FOR RELEASE ED ARTIOLA

Los Alamos NATIONAL LABORATORY PO Box 1663 Los Alamos, New Mexico 87545

SHEET E-5129A

356 OF 434

CLASSIFICATION | REVIEWER | DATE

PROJECT ID 100761 | DRAWING NO C55864 | REV 0

EUGENE DAVID MOE NEW MEXICO 21389 Professional Engineer

File Location: P:\RLWTF LOW-LEVEL WASTE FACILITY\300 CAD\C55864 MAIN BUILDING\SHEETS\18 ELECTRICAL\55864-E-5129A-180.DWG
Plotted By: MOORE, STEPHEN Plot Date: Monday, May 05, 2014

PARTS LIST/MATERIAL LIST

QTY REQD	PARTS / DWG NUMBER	NOMENCLATURE/DESCRIPTION	MATERIAL/REFERENCE	SHEET	ITEM NO.
X	-010	CAB-100 SERVER RACK			1
1	RACK-151-37U	37U SERVER RACK, HEIGHT: 73", DEPTH: 39.3" WIDTH: 23.5"	RACK SOLUTIONS		2
1	RACK-151-FANTRAY-6	FANTRAY WITH SIX FANS	RACK SOLUTIONS		3
2	PS19-F8-6-C	POWER STRIP, HORIZONTAL, 15A, 6FT CORD 8 FRONT OUTLETS	RACK SOLUTIONS		4
1	102-1823	2U FILLER PANEL FOR 19" RACK	RACK SOLUTIONS		5
1	102-1824	3U FILLER PANEL FOR 19" RACK	RACK SOLUTIONS		6
1	102-1826	5U FILLER PANEL FOR 19" RACK	RACK SOLUTIONS		7
1	102-2146	12U FILLER PANEL FOR 19" RACK	RACK SOLUTIONS		8
3	POWEREDGE R415	POWEREDGE R415 RACK SERVER (1U)	DELL		9
1	1U KMM	1U KMM KVM CONSOLE WITH TOUCHPAD KEYBOARD AND 17" LCD	DELL		10
2	SFE2000	24-PORT 10/100 RACKMOUNT ETHERNET SWITCH (1U)	CISCO		11
1	F1DP108A	8-PORT CAT5 KVM SWITCH (1U)	BELKIN		12
3	F1DP101A-AU	SERVER INTERFACE MODULE	BELKIN		13
1	202MC-ST	10/100BASETX TO 100BASEFX INDUSTRIAL MEDIA CONVERTER	N-TRON		14
1	URMK	UNIVERSAL RACK MOUNT KIT	N-TRON		15
1	UGB2/0-414-12	GROUNDING BAR, 12 PORT	PANDUIT		16
2	UGB-B-SO	BONDING STAND-OFF	PANDUIT		17
AR	G2X3WH6	WIRE DUCT, WHITE, 2.25 X 3.12	PANDUIT		18
AR	C2W6	COVER, WHITE	PANDUIT		19
4	RSB1C	RACK STAND-OFF BRACKETS, 5.3" DEEP	PANDUIT		20
1	5262G	DUPLEX RECEPTACLE, NEMA 5-15R	HUBBELL		21
1	660	HANDY BOX, 4" X 2" X 1 7/8"	RACO		22
1	864	HANDY BOX COVER, DUPLEX RECEPTACLE	RACO		23
1	1606XL480E	POWER SUPPLY, 480W, 24-28V	ALLEN-BRADLEY		24
AR	199-DR1 OR APPROVED EQUAL	RAIL, MOUNTING, STEEL	ALLEN-BRADLEY		25
36	1492-JT3M OR APPROVED EQUAL	TERMINAL, 300V, 3 LEVEL/3 CIRCUIT, WITH GROUND POINT	ALLEN-BRADLEY		26
3	1492-EBJ3TM OR APPROVED EQUAL	END BARRIER	ALLEN-BRADLEY		27
6	1492-EAHJ35 OR APPROVED EQUAL	END ANCHOR	ALLEN-BRADLEY		28
AR	1492-SJ6A-50	INSULATED SIDE JUMPER, 50 POLE	ALLEN-BRADLEY		29
8	1492-HM1BL	TERMINAL BLOCK, 600V, 30A MAX	ALLEN-BRADLEY		30
1	1492-NM36	END BARRIER	ALLEN-BRADLEY		31
4	1492-EAH35	END ANCHOR	ALLEN-BRADLEY		32
AR	1492-N49	SIDE JUMPER, FANNING STRIP, 10 POLE	ALLEN-BRADLEY		33
30	1492-H6	FUSE BLOCK, 300V, 12A MAX	ALLEN-BRADLEY		34
2	1492-N37	END BARRIER	ALLEN-BRADLEY		35
AR	1492-N49	SIDE JUMPER, FANNING STRIP, 10 POLE	ALLEN-BRADLEY		36
4	1492-EAHJ35 OR APPROVED EQUAL	END ANCHOR	ALLEN-BRADLEY		37
1	1756-A7	7 SLOT CONTROLLOGIX CHASSIS	ALLEN-BRADLEY		38
1	1756-PA75/B	85-265V AC POWER SUPPLY (5V @ 13A)	ALLEN-BRADLEY		39
1	1756-L73	CONTRLLOGIX CONTROLLER, 8 MB MEMORY, 1 USB PORT	ALLEN-BRADLEY		40
2	1756-ENBT	CONTRLLOGIX ETHERNET / IP 10/100 BRIDGE MODULE	ALLEN-BRADLEY		41
2	1756-IB16I	10-30 VDC ISOLATED INPUT MODULE, 16 POINTS	ALLEN-BRADLEY		42
1	1756-OB16I	10-30 VDC ISOLATED OUTPUT MODULE, 16 POINTS	ALLEN-BRADLEY		43
1	1756-IF16	ANALOG INPUT CURRENT/VOLTAGE MODULE, 16 POINT	ALLEN-BRADLEY		44
4	1756-TBCH	36 PIN SCREW CLAMP BLOCK WITH STANDARD HOUSING	ALLEN-BRADLEY		45
1	5825.072.1731	POWER CORD, 5-15P TO ROJ, 18/3, 6FT	AMERICORD		46
1	DSPLE000	DATA STATION/GATEWAY PROTOCOL CONVERTER	RED LION CONTROLS		47
2		FUSE, 5.0A	---		48
1		FUSE, 2.0A	---		49
20		FUSE, 1.0A	---		50
7		FUSE, 0.5A	---		51

NAMEPLATE ENGRAVING SCHEDULE

ITEM	SIZE	CHAR SIZE	ENGRAVING
A	3" W x 1" H	3/8"	CAB-100
B	3" W x 1" H	3/8"	NODE 3
C	1" W x 0.5" H	1/4"	GWY1
D	1" W x 0.5" H	1/4"	PS1
E	1" W x 0.5" H	1/4"	FC1
F	1" W x 0.5" H	1/4"	TB1
G	1" W x 0.5" H	1/4"	TB2
H	1" W x 0.5" H	1/4"	TB3
J	1" W x 0.5" H	1/4"	PB1
K	1" W x 0.5" H	1/4"	RTN1

GENERAL NOTES:

1. NAMEPLATE SHALL BE 1/16" THK MATTE FINISH LAMINATED PLASTIC WHITE SURFACE/BLACK CORE. BOND IN PLACE WHERE POSSIBLE.

NO	DATE	CLASS REV	ADC	DESCRIPTION	DWN	DES	CHKD	SUB	APP

AECOM

RLWTF-UP LOW LEVEL WASTE SUBPROJECT

CAB-100 PANEL LAYOUT

DRAWN V DAVISON
DESIGN S MOORE
CHECKED G MOE
DATE 5/8/14

BLDG. 230 TA-50

SUBMITTED MANNY TARIN

APPROVED FOR RELEASE ED ARTIGLIA

Los Alamos NATIONAL LABORATORY PO Box 1663 Los Alamos, New Mexico 87545

SHEET E-5129B

357 OF 434

CLASSIFICATION REVIEWER DATE

PROJECT ID 100761 DRAWING NO C55864 REV 0

EUGENE DAVID MOE NEW MEXICO 21369 PROFESSIONAL ENGINEER 05/07/2014

File Location: P:\RLWTF LOW-LEVEL WASTE FACILITY\000 CAD\C55864 MAIN BUILDING\SAFETY\10 ELECTRICAL\55864-E-5129B-RLDWG
Plotted By: MOORE, STEPHEN Plot Date: Monday, May 05, 2014

85n27

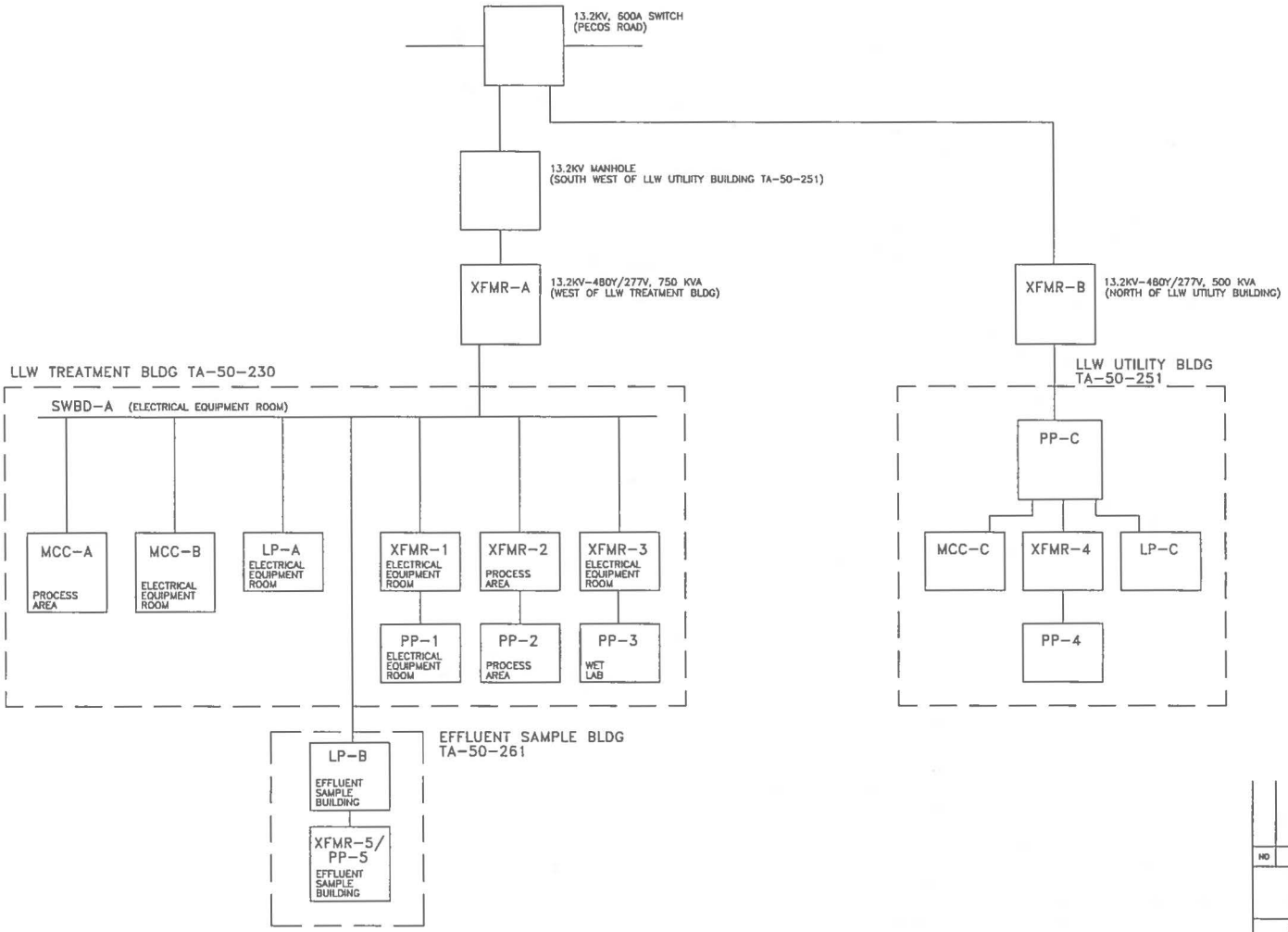

ELECTRICAL RISER BLOCK DIAGRAM

SCALE: NONE

"PRIORITY DRAWING"

NO	DATE	CLASS REV	ADC	DESCRIPTION	DWN	DES	CHKD	SUB	APP

AECOM

RLWTF-UP LOW LEVEL WASTE SUBPROJECT

RISER BLOCK DIAGRAM

BLDG. 230 TA-50

DRAWN	V DAVISON
DESIGN	S MOORE
CHECKED	G MOE
DATE	5/8/14

SUBMITTED MANNY TARIN

APPROVED FOR RELEASE ED ARTIGLIA

Los Alamos NATIONAL LABORATORY PO Box 1663 Los Alamos, New Mexico 87545

SHEET E-6000

358 OF 434

CLASSIFICATION | REVIEWER | DATE

PROJECT ID 100761 | DRAWING NO C55864 | REV 0

EUGENE DAVID MOE 21369 NEW MEXICO PROFESSIONAL ENGINEER 8/8/14

File Location: P:\RLWTF LOW-LEVEL WASTE FACILITY\300 CAD\C55864 MAIN BUILDING\SHEETS\10 ELECTRICAL\55864-E-6000-R0.DWG
Plotted By: MOORE, STEPHEN Plot Date: Monday, May 05, 2014

60127 :

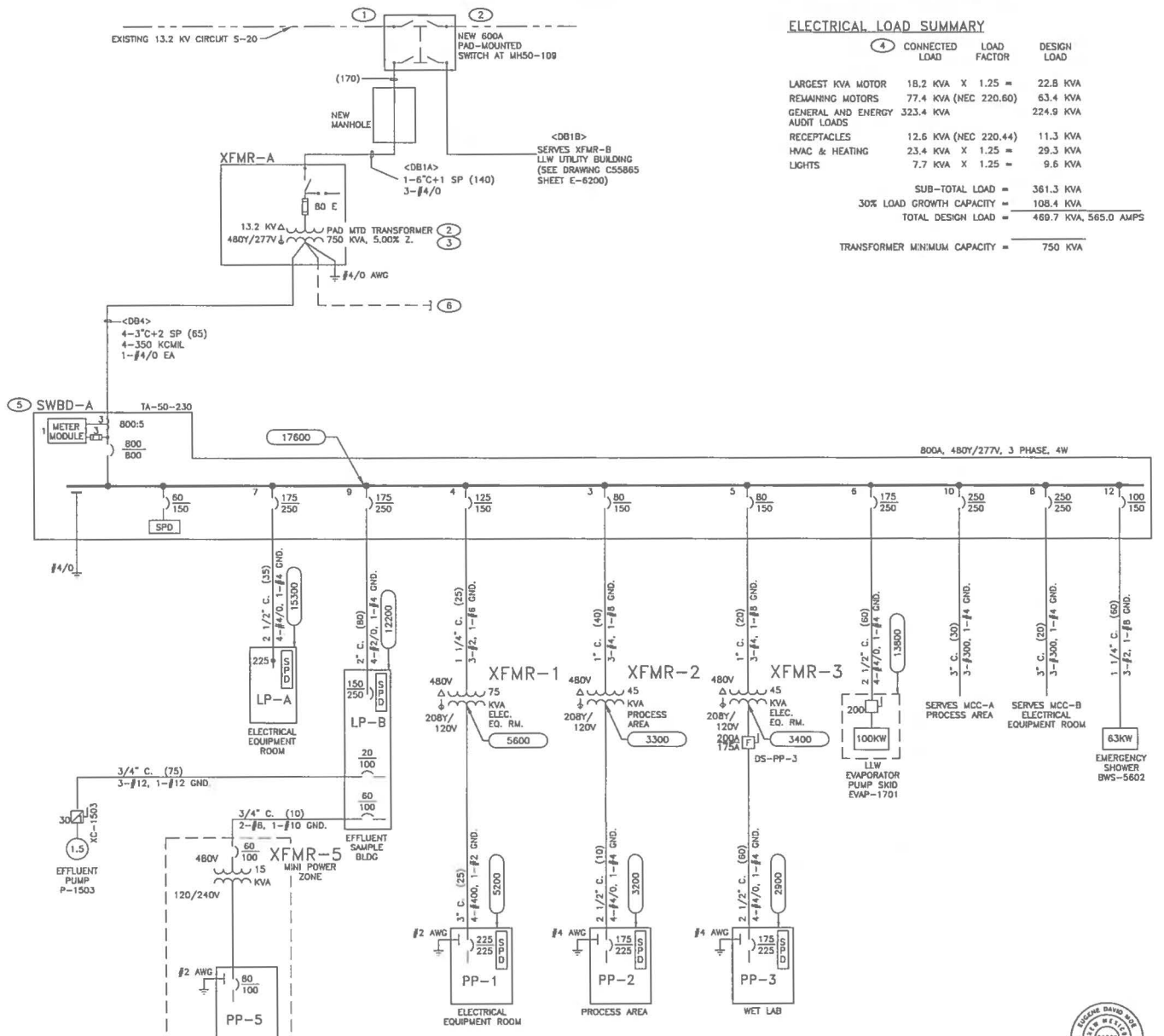

ELECTRICAL LOAD SUMMARY

(4)	CONNECTED LOAD	LOAD FACTOR	DESIGN LOAD
LARGEST KVA MOTOR	18.2 KVA	X 1.25 =	22.8 KVA
REMAINING MOTORS	77.4 KVA	(NEC 220.60)	63.4 KVA
GENERAL AND ENERGY AUDIT LOADS	323.4 KVA		224.9 KVA
RECEPTACLES	12.6 KVA	(NEC 220.44)	11.3 KVA
HVAC & HEATING	23.4 KVA	X 1.25 =	29.3 KVA
LIGHTS	7.7 KVA	X 1.25 =	9.6 KVA
		SUB-TOTAL LOAD =	361.3 KVA
		30% LOAD GROWTH CAPACITY =	108.4 KVA
		TOTAL DESIGN LOAD =	469.7 KVA, 565.0 AMPS
		TRANSFORMER MINIMUM CAPACITY =	750 KVA

GENERAL NOTES

1. SEE LEGEND SHEET FOR SYMBOL LEGEND AND ABBREVIATIONS.
2. (39000) = AVAILABLE 3ø FAULT CURRENT (RMS, SYM. AMPS).
3. (75) = CIRCUIT LENGTH IN FEET.
4. SYSTEM AND EQUIPMENT GROUNDING NOT SHOWN.
5. <DB1> = REFERENCE TO DUCT BANK SIZING CALCULATION.
6. SPARE CIRCUIT BREAKERS NOT SHOWN.
7. SURGE PROTECTION DEVICE TYPE 1 REQUIREMENTS IDENTIFIED IN SPECIFICATION SECTION 26 4300.
8. PHASE CONDUCTORS FOR ABOVE GROUND FEEDERS LARGER THAN #1/0 AWG ARE ALUMINUM OR COPPER-CLAD ALUMINUM. SEE CONDUIT AND WIRE SCHEDULE FOR CONDUCTOR TYPES.

KEYED NOTES

(1) ALL TIE-INS TO MAIN LINE WILL BE PERFORMED BY LANL MAINTENANCE AND SITE SERVICES.

(2) LANL MAINTENANCE AND SITE SERVICES WILL FURNISH AND INSTALL THE PAD MOUNTED SWITCH ON EXISTING MANHOLE AND FURNISH AND INSTALL PAD MOUNTED TRANSFORMER AND MV CABLE.

(3) PAD MOUNTED TRANSFORMER SHALL CONTAIN LESS THAN 500 GALLONS OF MINERAL OIL. CONTAINMENT IS NOT REQUIRED AT THE TRANSFORMER PAD.

(4) CONNECTED AND DESIGN LOAD VALUES OBTAINED FROM ELECTRICAL SYSTEM ANALYSIS CALCULATION. THE XFMR-A CAPACITY IS INCREASED TO THE NEXT STANDARD SIZE TO INCLUDE AN EXTRA 110 KVA FOR FUTURE BUILDING LOAD.

(5) SERVICE ENTRANCE RATED WITH 100% RATED MAIN BREAKER.

(6) DUCT BANK <DB6> FOR FUTURE LLW FIRE PUMP.

ELECTRICAL ONE-LINE DIAGRAM

SCALE: NONE

"PRIORITY DRAWING"

NO	DATE	CLASS REV	ADC	DESCRIPTION	DWN	DES	CHKD	SUB	APP

AECOM

RLWTF-UP LOW LEVEL WASTE SUBPROJECT

ONE-LINE DIAGRAM

BLDG. 230 TA-50

SUBMITTED MANNY TARIN

APPROVED FOR RELEASE ED ARTIGLIA

DRAWN	V DAVIDSON
DESIGN	S MOORE
CHECKED	G MOE
DATE	5/8/14

Los Alamos NATIONAL LABORATORY PO Box 1663 Los Alamos, New Mexico 87545

SHEET: E-6001

359 OF 434

CLASSIFICATION | REVIEWER | DATE

PROJECT ID 100761 | DRAWING NO C55864 | REV 0

EUGENE DAVID MOE NEW MEXICO 21389 PROFESSIONAL ENGINEER

File Location: P:\RLWTF LOW-LEVEL WASTE FACILITY\DGN\C55864 MAIN BUILD\NGN-SHEET\R16 ELECTRICAL\55864-E-6001-R0.DWG
Plotted By: MOORE, STEPHEN Plot Date: Monday, May 05, 2014

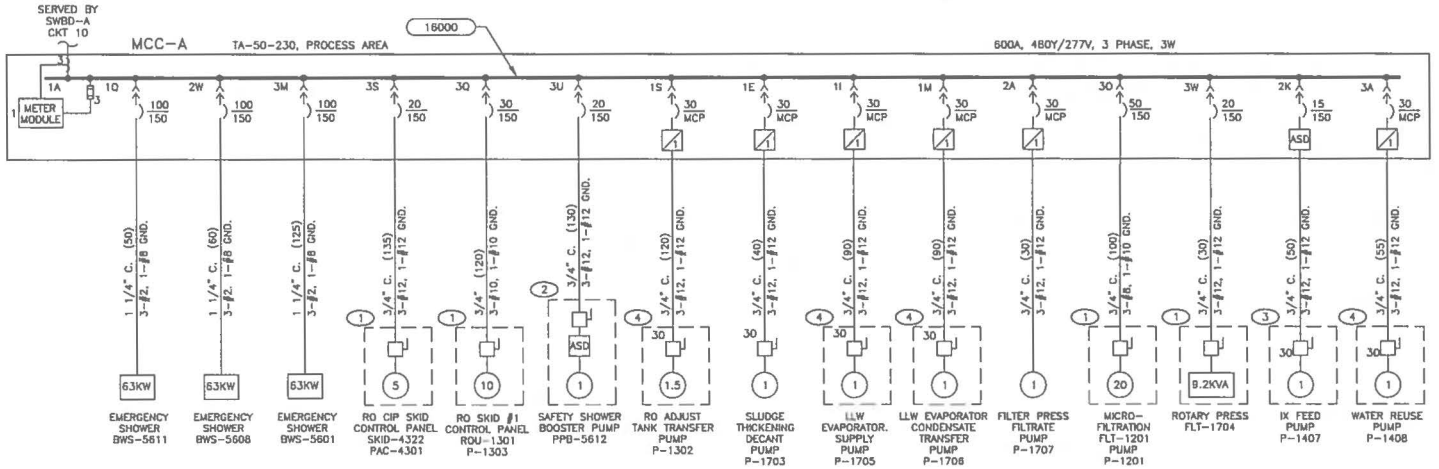

MCC-A ONE-LINE DIAGRAM

SCALE: NONE

GENERAL NOTES

1. SEE LEGEND SHEET FOR SYMBOLS AND ABBREVIATIONS.
2. (39000) = AVAILABLE 3ø FAULT CURRENT (RMS, SYM. AMPS).
3. (75) = CIRCUIT LENGTH IN FEET.
4. UNLESS OTHERWISE NOTED, FOR EACH MOTOR STARTER SHOWN, PROVIDE CONTROLNET COMPATIBLE COMMUNICATIONS MODULE TO PROVIDE REMOTE STATUS AND START/STOP CONTROL FOR THE FCS.
5. PROVIDE DISCONNECT SWITCH SHOWN FOR MOTORS UNLESS OTHERWISE NOTED. DISCONNECTS NOT REQUIRED FOR MOTORS WITHIN SIGHT OF MCC.
6. PROVIDE MOTOR CIRCUIT PROTECTORS WITH ADJUSTABLE TRIP SETTINGS WITHIN THE MAXIMUM SETTING ALLOWED BY NFPA 70 FOR INSTANTANEOUS TRIP BREAKERS.
7. PHASE CONDUCTORS FOR ABOVE GROUND FEEDERS LARGER THAN #1/0 AWG ARE ALUMINUM OR COPPER-CLAD ALUMINUM. SEE CONDUIT AND WIRE SCHEDULE FOR CONDUCTOR TYPES

KEYED NOTES

1. DISCONNECT SWITCH AND LOCAL PUMP CONTROLLER ARE PROVIDED WITH EQUIPMENT.
2. VERTICAL SHAFT PUMP PROVIDED WITH INTEGRALLY MOUNTED ADJUSTABLE SPEED DRIVE AND LOCAL DISCONNECT SWITCH.
3. DISCONNECT SWITCH IS PROVIDED WITH EQUIPMENT. PROVIDE DISCONNECT SWITCH WITH AUXILIARY CONTACT FOR RUN PERMISSIVE INTERLOCK WITH ASD.
4. DISCONNECT SWITCH IS PROVIDED WITH EQUIPMENT.

"PRIORITY DRAWING"

NO	DATE	CLASS REV	ADC	DESCRIPTION	DWN	DES	CHKD	SUB	APP

AECOM

RLWTF-UP LOW LEVEL WASTE SUBPROJECT

MCC-A ONE-LINE DIAGRAM

BLDG. 230 TA-50

DRAWN	V DAVISON
DESIGN	S MOORE
CHECKED	G MOE
DATE	5/8/14

SUBMITTED: MANNY TARIN — APPROVED FOR RELEASE: ED ARTIGLIA

Los Alamos NATIONAL LABORATORY — PO Box 1663, Los Alamos, New Mexico 87545

SHEET E-6100

360 OF 434

CLASSIFICATION | REVIEWER | DATE

PROJECT ID 100761 | DRAWING NO C55864 | REV 0

EUGENE DAVID MOE — NEW MEXICO — 21288 — PROFESSIONAL ENGINEER — 5/8/14

File Location: P:\RLWTF LOW-LEVEL WASTE FACILITY\50 CAD\C55864 MAIN BUILDING\SHEETS\18 ELECTRICAL\55864-E-6100-R0.DWG
Plotted By: MOORE, STEPHEN Plot Date: Monday, May 05, 2014

11/21/11 :

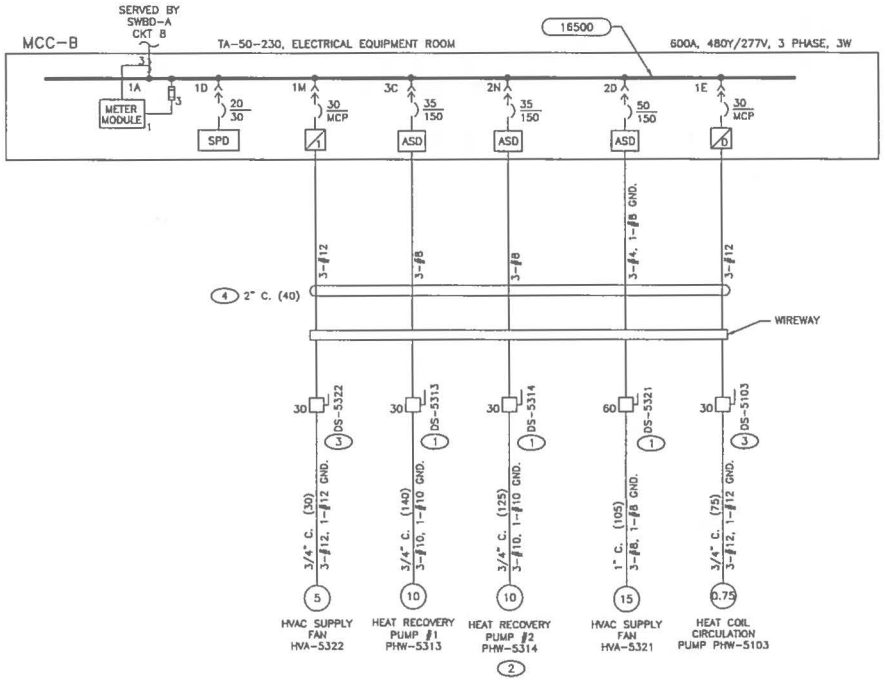

MCC-B ONE-LINE DIAGRAM

SCALE: NONE

GENERAL NOTES

1. SEE LEGEND SHEET FOR SYMBOLS AND ABBREVIATIONS.
2. (39000) = AVAILABLE 3ø FAULT CURRENT (RMS, SYM. AMPS).
3. (75) = CIRCUIT LENGTH IN FEET.
4. UNLESS OTHERWISE NOTED, FOR EACH MOTOR STARTER AND ADJUSTABLE SPEED DRIVE SHOWN, PROVIDE BACNET COMPATIBLE COMMUNICATIONS MODULE TO PROVIDE REMOTE STATUS, START/STOP AND SPEED CONTROL FROM THE BUILDING AUTOMATION SYSTEM (BAS).
5. PROVIDE MOTOR CIRCUIT PROTECTORS WITH ADJUSTABLE TRIP SETTINGS WITHIN THE MAXIMUM SETTING ALLOWED BY NFPA 70 FOR INSTANTANEOUS TRIP BREAKERS.
6. SURGE PROTECTIVE DEVICE REQUIREMENTS AND TYPES IDENTIFIED IN SPECIFICATION SECTION 26 4300.
7. PHASE CONDUCTORS FOR ABOVE GROUND FEEDERS LARGER THAN #1/0 AWG ARE ALUMINUM OR COPPER-CLAD ALUMINUM. SEE CONDUIT AND WIRE SCHEDULE FOR CONDUCTOR TYPES

KEYED NOTES

1. PROVIDE DISCONNECT SWITCH WITH AUXILIARY CONTACT FOR FAN RUN PERMISSIVE INTERLOCK WITH ASD.
2. NORMALLY OFF BACKUP MOTOR.
3. PROVIDE DISCONNECT SWITCH.
4. INSTALL SINGLE EQUIPMENT GROUND FOR MOTOR FEEDERS. SEE SHEET E-5108 KEYED NOTE 4.

"PRIORITY DRAWING"

NO	DATE	CLASS REV	ADC	DESCRIPTION	DWN	DES	CHKD	SUB	APP

AECOM

RLWTF-UP LOW LEVEL WASTE SUBPROJECT

MCC-B ONE-LINE DIAGRAM

DRAWN	V DAVISON
DESIGN	S MOORE
CHECKED	G MOE
DATE	5/8/14

BLDG. 230 TA-50

SUBMITTED MANNY TARIN — APPROVED FOR RELEASE ED ARTIGLIA

Los Alamos NATIONAL LABORATORY PO Box 1663 Los Alamos, New Mexico 87545

SHEET E-6101

361 OF 434

CLASSIFICATION — REVIEWER — DATE

PROJECT ID 100761 — DRAWING NO C55864 — REV 0

EUGENE DAVID MOE NEW MEXICO 21369 PROFESSIONAL ENGINEER 5/8/14

File Location: P:\RLWTF LOW-LEVEL WASTE FACILITY\DGN CAD\C55864 MAIN BUILDING\SHEETS\15 ELECTRICAL\55864-E-6101-R2.DWG
Plotted By: MOORE, STEPHEN Plot Date: Monday, May 05, 2014

211211

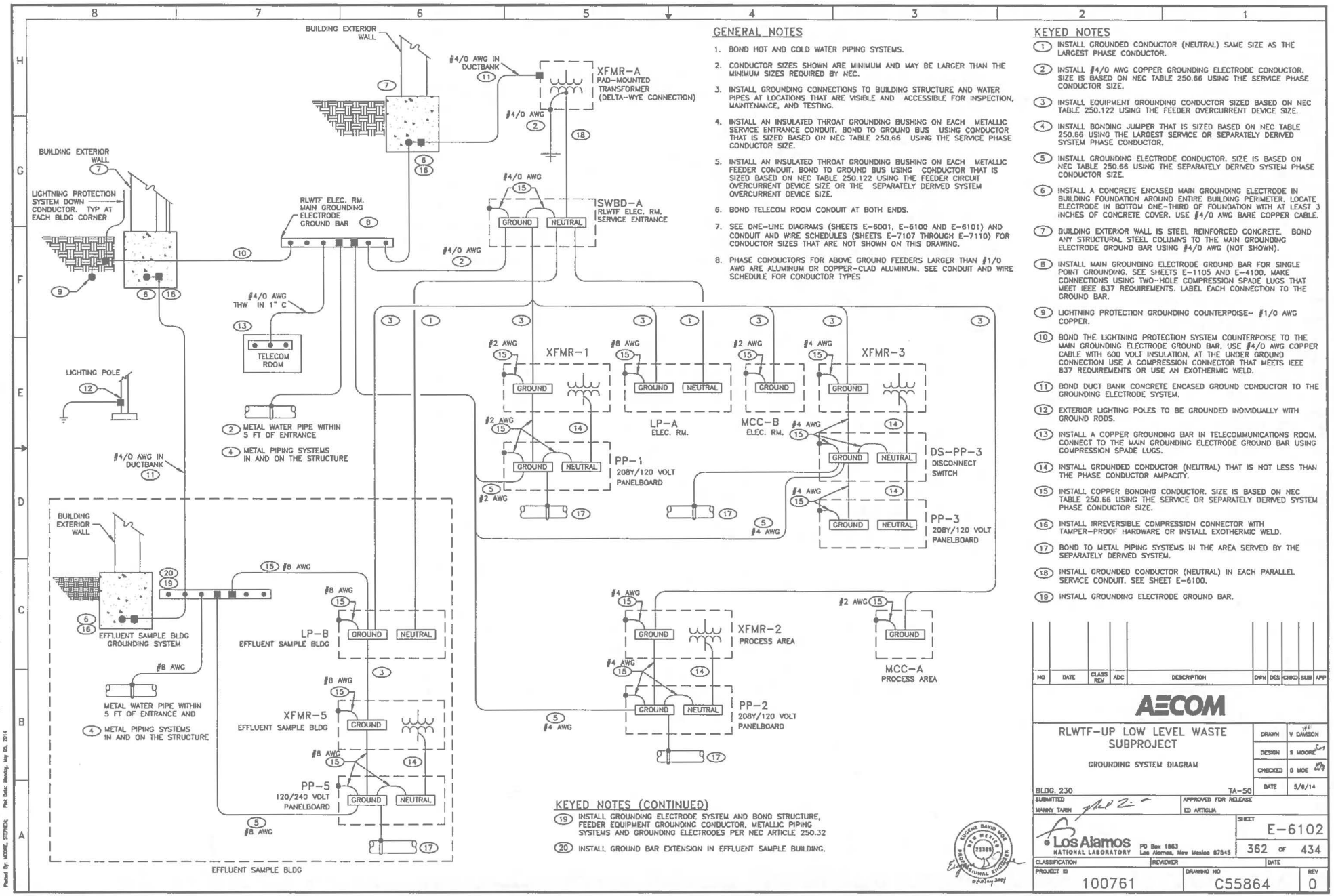

GENERAL NOTES

1. BOND HOT AND COLD WATER PIPING SYSTEMS.
2. CONDUCTOR SIZES SHOWN ARE MINIMUM AND MAY BE LARGER THAN THE MINIMUM SIZES REQUIRED BY NEC.
3. INSTALL GROUNDING CONNECTIONS TO BUILDING STRUCTURE AND WATER PIPES AT LOCATIONS THAT ARE VISIBLE AND ACCESSIBLE FOR INSPECTION, MAINTENANCE, AND TESTING.
4. INSTALL AN INSULATED THROAT GROUNDING BUSHING ON EACH METALLIC SERVICE ENTRANCE CONDUIT. BOND TO GROUND BUS USING CONDUCTOR THAT IS SIZED BASED ON NEC TABLE 250.66 USING THE SERVICE PHASE CONDUCTOR SIZE.
5. INSTALL AN INSULATED THROAT GROUNDING BUSHING ON EACH METALLIC FEEDER CONDUIT. BOND TO GROUND BUS USING CONDUCTOR THAT IS SIZED BASED ON NEC TABLE 250.122 USING THE FEEDER CIRCUIT OVERCURRENT DEVICE SIZE OR THE SEPARATELY DERIVED SYSTEM OVERCURRENT DEVICE SIZE.
6. BOND TELECOM ROOM CONDUIT AT BOTH ENDS.
7. SEE ONE-LINE DIAGRAMS (SHEETS E-6001, E-6100 AND E-6101) AND CONDUIT AND WIRE SCHEDULES (SHEETS E-7107 THROUGH E-7110) FOR CONDUCTOR SIZES THAT ARE NOT SHOWN ON THIS DRAWING.
8. PHASE CONDUCTORS FOR ABOVE GROUND FEEDERS LARGER THAN #1/0 AWG ARE ALUMINUM OR COPPER-CLAD ALUMINUM. SEE CONDUIT AND WIRE SCHEDULE FOR CONDUCTOR TYPES

KEYED NOTES

(1) INSTALL GROUNDED CONDUCTOR (NEUTRAL) SAME SIZE AS THE LARGEST PHASE CONDUCTOR.

(2) INSTALL #4/0 AWG COPPER GROUNDING ELECTRODE CONDUCTOR. SIZE IS BASED ON NEC TABLE 250.66 USING THE SERVICE PHASE CONDUCTOR SIZE.

(3) INSTALL EQUIPMENT GROUNDING CONDUCTOR SIZED BASED ON NEC TABLE 250.122 USING THE FEEDER OVERCURRENT DEVICE SIZE.

(4) INSTALL BONDING JUMPER THAT IS SIZED BASED ON NEC TABLE 250.66 USING THE LARGEST SERVICE OR SEPARATELY DERIVED SYSTEM PHASE CONDUCTOR.

(5) INSTALL GROUNDING ELECTRODE CONDUCTOR. SIZE IS BASED ON NEC TABLE 250.66 USING THE SEPARATELY DERIVED SYSTEM PHASE CONDUCTOR SIZE.

(6) INSTALL A CONCRETE ENCASED MAIN GROUNDING ELECTRODE IN BUILDING FOUNDATION AROUND ENTIRE BUILDING PERIMETER. LOCATE ELECTRODE IN BOTTOM ONE-THIRD OF FOUNDATION WITH AT LEAST 3 INCHES OF CONCRETE COVER. USE #4/0 AWG BARE COPPER CABLE.

(7) BUILDING EXTERIOR WALL IS STEEL REINFORCED CONCRETE. BOND ANY STRUCTURAL STEEL COLUMNS TO THE MAIN GROUNDING ELECTRODE GROUND BAR USING #4/0 AWG (NOT SHOWN).

(8) INSTALL MAIN GROUNDING ELECTRODE GROUND BAR FOR SINGLE POINT GROUNDING. SEE SHEETS E-1105 AND E-4100. MAKE CONNECTIONS USING TWO-HOLE COMPRESSION SPADE LUGS THAT MEET IEEE 837 REQUIREMENTS. LABEL EACH CONNECTION TO THE GROUND BAR.

(9) LIGHTNING PROTECTION GROUNDING COUNTERPOISE-- #1/0 AWG COPPER.

(10) BOND THE LIGHTNING PROTECTION SYSTEM COUNTERPOISE TO THE MAIN GROUNDING ELECTRODE GROUND BAR. USE #4/0 AWG COPPER CABLE WITH 600 VOLT INSULATION. AT THE UNDER GROUND CONNECTION USE A COMPRESSION CONNECTOR THAT MEETS IEEE 837 REQUIREMENTS OR USE AN EXOTHERMIC WELD.

(11) BOND DUCT BANK CONCRETE ENCASED GROUND CONDUCTOR TO THE GROUNDING ELECTRODE SYSTEM.

(12) EXTERIOR LIGHTING POLES TO BE GROUNDED INDIVIDUALLY WITH GROUND RODS.

(13) INSTALL A COPPER GROUNDING BAR IN TELECOMMUNICATIONS ROOM. CONNECT TO THE MAIN GROUNDING ELECTRODE GROUND BAR USING COMPRESSION SPADE LUGS.

(14) INSTALL GROUNDED CONDUCTOR (NEUTRAL) THAT IS NOT LESS THAN THE PHASE CONDUCTOR AMPACITY.

(15) INSTALL COPPER BONDING CONDUCTOR. SIZE IS BASED ON NEC TABLE 250.66 USING THE SERVICE OR SEPARATELY DERIVED SYSTEM PHASE CONDUCTOR SIZE.

(16) INSTALL IRREVERSIBLE COMPRESSION CONNECTOR WITH TAMPER-PROOF HARDWARE OR INSTALL EXOTHERMIC WELD.

(17) BOND TO METAL PIPING SYSTEMS IN THE AREA SERVED BY THE SEPARATELY DERIVED SYSTEM.

(18) INSTALL GROUNDED CONDUCTOR (NEUTRAL) IN EACH PARALLEL SERVICE CONDUIT. SEE SHEET E-6100.

(19) INSTALL GROUNDING ELECTRODE GROUND BAR.

KEYED NOTES (CONTINUED)

(19) INSTALL GROUNDING ELECTRODE SYSTEM AND BOND STRUCTURE, FEEDER EQUIPMENT GROUNDING CONDUCTOR, METALLIC PIPING SYSTEMS AND GROUNDING ELECTRODES PER NEC ARTICLE 250.32

(20) INSTALL GROUND BAR EXTENSION IN EFFLUENT SAMPLE BUILDING.

NO	DATE	CLASS REV	ADC	DESCRIPTION	DWN	DES	CHKD	SUB	APP

AECOM

RLWTF-UP LOW LEVEL WASTE SUBPROJECT

GROUNDING SYSTEM DIAGRAM

BLDG. 230 TA-50

DRAWN	V DAVISON
DESIGN	S MOORE
CHECKED	G MOE
DATE	5/8/14

SUBMITTED MANNY TARIN

APPROVED FOR RELEASE ED ARTIGLIA

Los Alamos NATIONAL LABORATORY PO Box 1663 Los Alamos, New Mexico 87545

SHEET E-6102

362 OF 434

CLASSIFICATION | REVIEWER | DATE

PROJECT ID 100761

DRAWING NO C55864

REV 0

EUGENE DAVID MOE NEW MEXICO 21369 PROFESSIONAL ENGINEER 5/8/14

File Location: P:\RLWTF LOW-LEVEL WASTE FACILITY\300 CAD\C55864 MAIN BUILDING\SHEETS\18 ELECTRICAL\55864-E-6102-RD.DWG
Plotted By: MOORE, STEPHEN Plot Date: Monday, May 05, 2014

E-6102

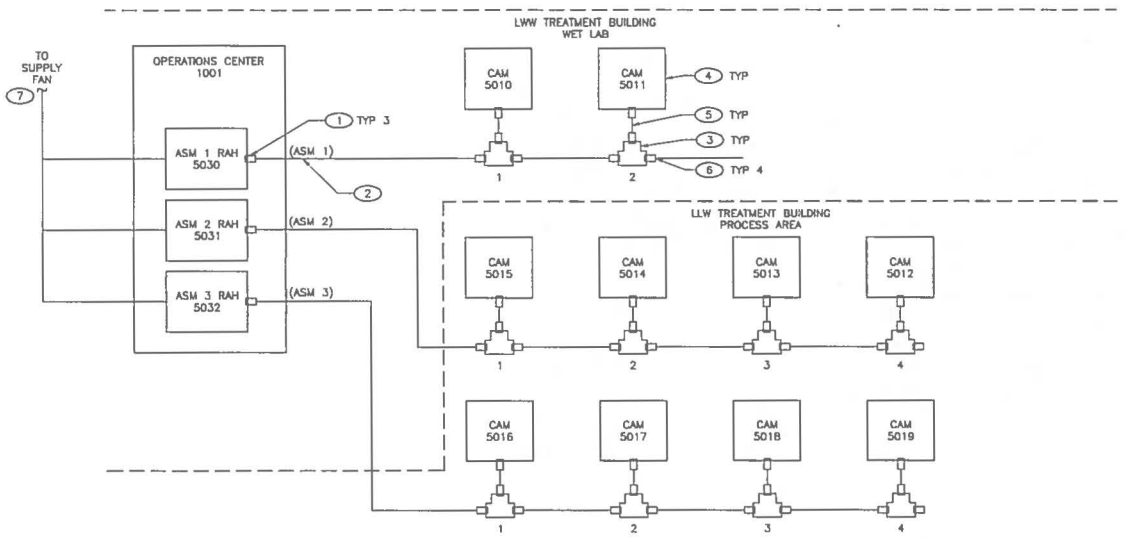

GENERAL NOTES

1. INSTALL "ALARM OPTION" MODULE ON EACH CAM SAMPLE HEAD PER MANUFACTURERS INSTRUCTIONS (NOT SHOWN).

KEYED NOTES

1. ALARM SENTRY MANAGER "CAM" NETWORK WIRING TO BE INSTALLED USING MANUFACTURERS INSTRUCTIONS AND PINOUT DIAGRAMS FOR 9 PIN D-TYPE CONNECTORS.
2. PROVIDE RS-485 COMMUNICATION NETWORK, POWER LIMITED TRAY CABLE PER SPECIFICATION SECTION 28 3233.4.
3. NETWORK "TEE" BOX WIRING TO BE INSTALLED PER MANUFACTURERS INSTRUCTIONS AND PINOUT DIAGRAMS FOR 9 PIN D-TYPE CONNECTORS. SET DIP SWITCHES PER ADDRESS TABLE PROVIDED BY MANUFACTURER USING CAM NUMBERS SHOWN BELOW NETWORK TEE BOX ON THIS DRAWING.
4. SEE SHEETS E-1111 AND E-1112 FOR CAM LAYOUT. SEE SHEET E-5102 FOR MOUNTING DETAILS.
5. NETWORK ACCESS CABLE PROVIDED BY MANUFACTURER WITH EACH NETWORK "TEE" BOX. THIS 10 FOOT CABLE IS PROVIDED WITH 9 PIN D-TYPE CONNECTORS PRE-INSTALLED.
6. NETWORK TERMINATOR PROVIDED BY MANUFACTURER WITH EACH NETWORK "TEE" BOX. INSTALL TERMINATOR AS REQUIRED AT THE END OF EACH ALARM SENTRY MANAGER "CAM" NETWORK PER MANUFACTURERS INSTRUCTIONS.
7. USE EXPOSURE ALARM RELAY CONTACT TO TIE TO BUILDING AUTOMATION SYSTEM FOR SUPPLY FAN INTERLOCK. SEE SHEET M-6102 INTERLOCK 4.

RADIATION MONITORING SYSTEM WIRING DIAGRAM

SCALE: NONE

NO	DATE	CLASS REV	ADC	DESCRIPTION	DWN	DES	CHKD	SUB	APP

AECOM

RLWTF-UP LOW LEVEL WASTE SUBPROJECT

RADIATION MONITORING SYSTEM WIRING DIAGRAM

BLDG. 230 TA-50

DRAWN	V DAVISON
DESIGN	S MOORE
CHECKED	G MOE
DATE	5/8/14

SUBMITTED: MANNY TARIN

APPROVED FOR RELEASE: ED ARTIGLIA

Los Alamos NATIONAL LABORATORY PO Box 1663 Los Alamos, New Mexico 87545

SHEET E-6103

363 OF 434

CLASSIFICATION | REVIEWER | DATE

PROJECT ID 100761 | DRAWING NO C55864 | REV 0

EUGENE DAVID MOE NEW MEXICO 21289 PROFESSIONAL ENGINEER

File Location: P:\RLWTF LOW-LEVEL WASTE FACILITY\500 CAD\C55864 MAIN BUILDING\SHEETS\18 ELECTRICAL\55864-E-6103-RD.DWG
Plotted By: MOORE, STEPHEN Plot Date: Monday, May 05, 2014

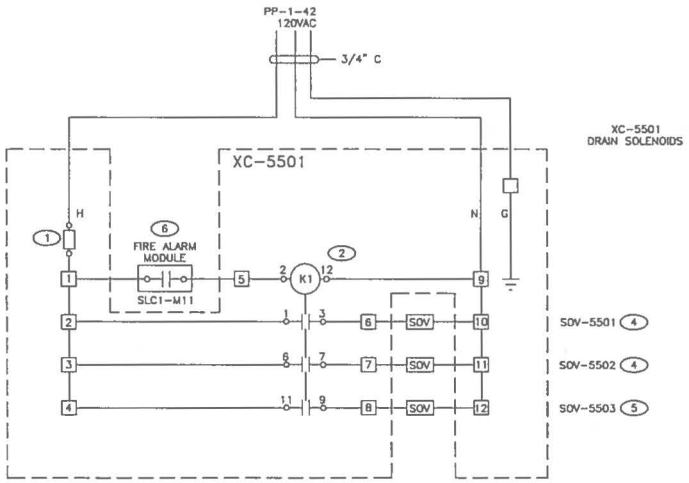

GENERAL NOTES

1. SEE SHEET E-4100 FOR PANEL LOCATION IN ELECTRICAL ROOM 1014.

KEYED NOTES

(1) PROVIDE AND INSTALL 120V, 5A FUSE AND FUSE HOLDER. FUSE HOLDER SHALL BE FLUSH MOUNT ON ENCLOSURE DOOR AND INCLUDE LED INDICATOR.

(2) PROVIDE TUBULAR TERMINAL BASE RELAY, 11 PIN, 120VAC, 3PDT (SQUARE D KP13 OR APPROVED EQUAL).

(3) PROVIDE AND INSTALL DIN RAIL TERMINAL BLOCKS IN ENCLOSURE AND WIRE AS SHOWN. WIRING BETWEEN POWER SUPPLY AND TB1 SHALL BE 16 AWG TYPE THHN CONDUCTORS.

(4) SEE SHEET E-1102 KEYED NOTE 5 FOR DRAIN SOLENOID LOCATIONS.

(5) SEE SHEET E-1101 KEYED NOTE 10 FOR DRAIN SOLENOID LOCATION.

(6) SEE SHEET F-1103 FOR FIRE ALARM MODULE LOCATION. SEE SHEET F-6101 AND SHEET P-6001 FOR P&ID.

SEQUENCE OF OPERATION

RELAY K1 IS NORMALLY DEENERGIZED AND SOLENOIDS SOV 5501, SOV-5502 AND SOV-5503 ARE NORMALLY CLOSED.

IN THE EVENT OF A FIRE ALARM, THE NORMALLY OPEN CONTACTS ON THE ADDRESSABLE RELAY MODULE FRM WILL CLOSE. RELAY K1 ENERGIZES APPLYING POWER TO SOLENOIDS. SOLENOIDS CLOSE.

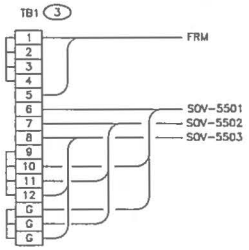

FLOOR DRAIN SOLENOID WIRING DIAGRAM

SCALE: NONE

NO	DATE	CLASS REV	ADC	DESCRIPTION	DWN	DES	CHKD	SUB	APP

AECOM

RLWTF-UP LOW LEVEL WASTE SUBPROJECT

DRAIN SOLENOID ACTIVATION DIAGRAM

BLDG. 230 TA-50

DRAWN	V DAVISON
DESIGN	S MOORE
CHECKED	G MOE
DATE	5/8/14

SUBMITTED MANNY TARIN

APPROVED FOR RELEASE ED ARTIOLIA

Los Alamos NATIONAL LABORATORY PO Box 1663 Los Alamos, New Mexico 87545

SHEET	
E-6104	
364 OF 434	

CLASSIFICATION | REVIEWER | DATE

PROJECT ID	DRAWING NO	REV
100761	C55864	0

EUGENE DAVID MOE 21389 NEW MEXICO PROFESSIONAL ENGINEER

5/8/14

File Location: P:\RLWTF LOW-LEVEL WASTE FACILITY\300 CAD\C55864 MAIN BUILDING\SHEETS\10 ELECTRICAL\55864-E-6104-R0.DWG
Plotted By: MOORE, STEPHEN Plot Date: Monday, May 05, 2014

5/8/2014

GENERAL NOTES

1. SEE SHEET E-4000 FOR HEAT TRACE ENCLOSURE LOCATION.
2. SEE SPECIFICATION SECTION 22 0535 FOR HEAT TRACE CABINET REQUIREMENTS.

KEYED NOTES

(1) TYPICAL CONNECTION FOR ALL HEAT TRACE CIRCUITS.

(2) ALL BRANCH BREAKER SHALL BE 20A GFEP.

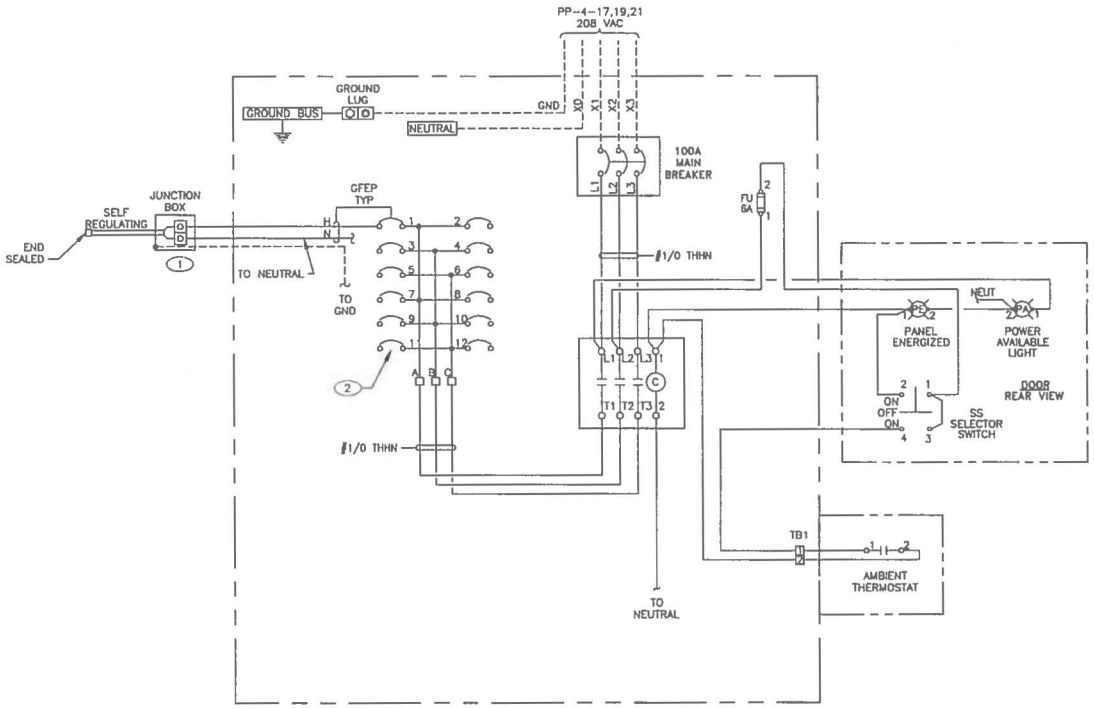

HEAT TRACE CABINET, HTC-1503

SCALE: NONE

NO	DATE	CLASS REV	ADC	DESCRIPTION	DWN	DES	CHKD	SUB	APP

AECOM

RLWTF-UP LOW LEVEL WASTE SUBPROJECT

HEAT TRACE WIRING DIAGRAM

DRAWN	V DAVISON
DESIGN	S MOORE
CHECKED	G MOE
DATE	5/8/14

BLDG. 230 TA-50

SUBMITTED: MANNY TARIN — APPROVED FOR RELEASE: ED ARTIGLIA

Los Alamos NATIONAL LABORATORY PO Box 1663 Los Alamos, New Mexico 87545

SHEET: E-6105

365 OF 434

CLASSIFICATION | REVIEWER | DATE

PROJECT ID: 100761 | DRAWING NO: C55864 | REV: 0

EUGENE DAVID MOE — NEW MEXICO — 21368 — REGISTERED PROFESSIONAL ENGINEER — 5/8/14

File Location: P:\RLWTF LOW-LEVEL WASTE FACILITY\300 CAD\C55863 CURSHEETS\10 ELECTRICAL\55864-E-6105-R0.DWG
Plotted By: MOORE, STEPHEN Plot Date: Monday, May 05, 2014

591215

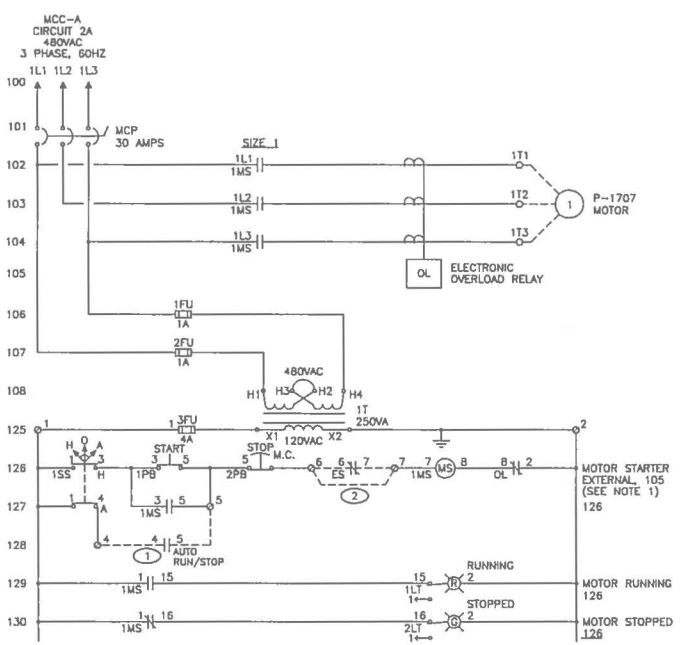

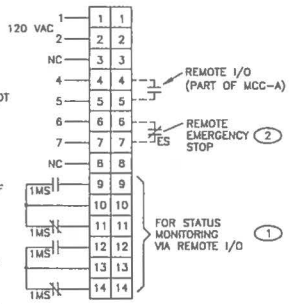

SEQUENCE OF OPERATION

1. WITH H-O-A SELECTOR SWITCH "1SS" IN ANY POSITION AND MOTOR NOT RUNNING, GREEN "STOPPED" PILOT LIGHT "2LT" IS ON, RED "RUNNING" PILOT LIGHT "1LT" IS OFF.
2. WITH H-O-A SELECTOR SWITCH "1SS" IN "HAND" POSITION, PRESS "START" PUSHBUTTON "1PB", MOTOR STARTS, RED "RUNNING" PILOT LIGHT "1LT" IS ON AND GREEN "STOPPED" PILOT LIGHT "2LT" IS OFF.
3. WITH H-O-A SELECTOR SWITCH "1SS" IN "AUTO" POSITION, CLOSING OF MAINTAINED CONTACT FROM CONTROLNET INTERFACE CONTACT STARTS MOTOR, RED "RUNNING" PILOT LIGHT "1LT" IS ON, GREEN "STOPPED" PILOT LIGHT "2LT" IS OFF.
4. WITH H-O-A SELECTOR SWITCH "1SS" IN ANY POSITION, OPENING OF MAINTAINED REMOTE "EMERGENCY STOP" CONTACTS "ES" STOPS MOTOR, GREEN "STOPPED" PILOT LIGHT "2LT" IS ON, RED "RUNNING" PILOT LIGHT "1LT" IS OFF.
5. WITH H-O-A SELECTOR SWITCH "1SS" IN "HAND" OR "AUTO" POSITION, PRESS MAINTAINED ACTION, ROTARY RELEASE "STOP" PUSHBUTTON, MOTOR STOPS, GREEN "STOPPED" PILOT LIGHT "2LT" IS ON, RED "RUNNING" PILOT LIGHT "1LT" IS OFF.

MOTOR CONTROL DIAGRAM – FILTER PRESS FILTRATE PUMP (P-1707)

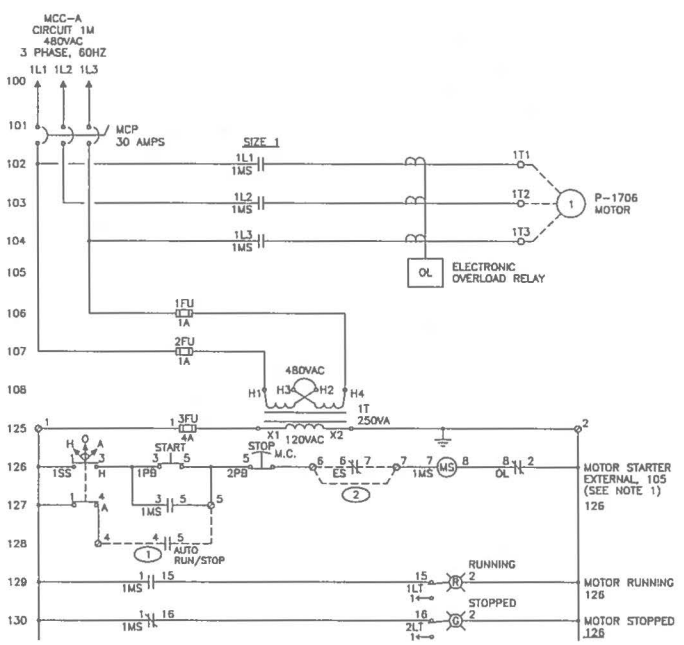

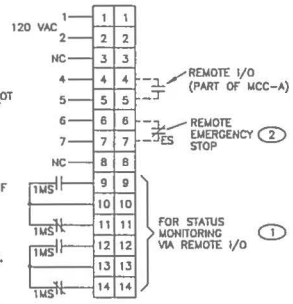

SEQUENCE OF OPERATION

1. WITH H-O-A SELECTOR SWITCH "1SS" IN ANY POSITION AND MOTOR NOT RUNNING, GREEN "STOPPED" PILOT LIGHT "2LT" IS ON, RED "RUNNING" PILOT LIGHT "1LT" IS OFF.
2. WITH H-O-A SELECTOR SWITCH "1SS" IN "HAND" POSITION, PRESS "START" PUSHBUTTON "1PB", MOTOR STARTS, RED "RUNNING" PILOT LIGHT "1LT" IS ON AND GREEN "STOPPED" PILOT LIGHT "2LT" IS OFF.
3. WITH H-O-A SELECTOR SWITCH "1SS" IN "AUTO" POSITION, CLOSING OF MAINTAINED CONTACT FROM CONTROLNET INTERFACE CONTACT STARTS MOTOR, RED "RUNNING" PILOT LIGHT "1LT" IS ON, GREEN "STOPPED" PILOT LIGHT "2LT" IS OFF.
4. WITH H-O-A SELECTOR SWITCH "1SS" IN ANY POSITION, OPENING OF MAINTAINED REMOTE "EMERGENCY STOP" CONTACTS "ES" STOPS MOTOR, GREEN "STOPPED" PILOT LIGHT "2LT" IS ON, RED "RUNNING" PILOT LIGHT "1LT" IS OFF.
5. WITH H-O-A SELECTOR SWITCH "1SS" IN "HAND" OR "AUTO" POSITION, PRESS MAINTAINED ACTION, ROTARY RELEASE "STOP" PUSHBUTTON, MOTOR STOPS, GREEN "STOPPED" PILOT LIGHT "2LT" IS ON, RED "RUNNING" PILOT LIGHT "1LT" IS OFF.

MOTOR CONTROL DIAGRAM – LLW EVAP COND TRANSFER PUMP (P-1706)

GENERAL NOTES

1. NUMBERS ON THE RIGHT SIDE OF LADDER DIAGRAMS INDICATE DIAGRAM LINE NUMBERS FOR CONTROL DEVICE CONTACTS. UNDERLINED NUMBER INDICATES A NORMALLY CLOSED CONTACT.
2. MOTOR CONTROL DIAGRAM TO BE PROVIDED TO MCC MANUFACTURER WITH SPECIFICATION SECTION 26 2419, MOTOR CONTROL CENTERS.

KEYED NOTES

(1) PROVIDE AND INSTALL ADDITIONAL CONTROL RELAYS AND WIRING AS REQUIRED TO ALLOW MOTOR CONTROL AND STATUS INDICATION FROM THE REMOTE I/O PROVIDED WITH THE MCC.

(2) JUMPER INSTALLED BETWEEN TERMINALS 6 & 7. REMOTE EMERGENCY STOP SWITCH OPTION IS NOT USED IN THE FIELD.

NO	DATE	CLASS REV	ADC	DESCRIPTION	DWN	DES	CHKD	SUB	APP

AECOM

RLWTF-UP LOW LEVEL WASTE SUBPROJECT

MOTOR CONTROL DIAGRAMS

DRAWN	V DAVISON
DESIGN	S MOORE
CHECKED	G MOE
DATE	5/8/14

BLDG. 230 TA-50

SUBMITTED: MANNY TARIN — APPROVED FOR RELEASE: ED ARTIGLIA

Los Alamos NATIONAL LABORATORY — PO Box 1663, Los Alamos, New Mexico 87545

CLASSIFICATION | REVIEWER | DATE

PROJECT ID: 100761 | DRAWING NO: C55864 | REV: 0

SHEET: E-6110

366 OF 434

EUGENE DAVID MOE — NEW MEXICO — 21369 — PROFESSIONAL ENGINEER

ENGINEER:
File Location: P:\RLWTF LOW-LEVEL WASTE FACILITY\300 CAD\C55864 MAIN BUILDING\SHEETS\18 ELECTRICAL\55864-E-6110-R0.DWG
Plotted By: MOORE, STEPHEN PM Date: Monday, May 05, 2014

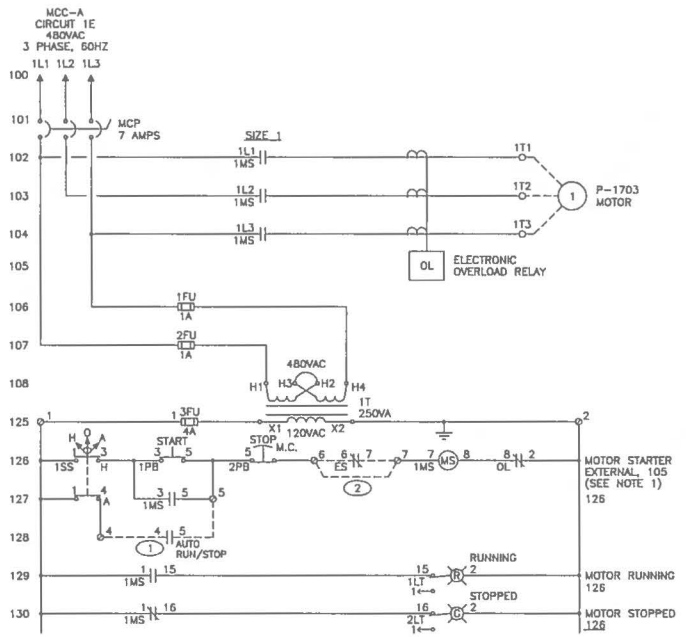

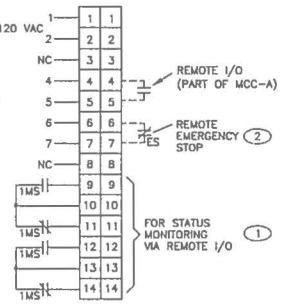

SEQUENCE OF OPERATION

1. WITH H-O-A SELECTOR SWITCH "1SS" IN ANY POSITION AND MOTOR NOT RUNNING, GREEN "STOPPED" PILOT LIGHT "2LT" IS ON, RED "RUNNING" PILOT LIGHT "1LT" IS OFF.
2. WITH H-O-A SELECTOR SWITCH "1SS" IN "HAND" POSITION, PRESS "START" PUSHBUTTON "1PB", MOTOR STARTS, RED "RUNNING" PILOT LIGHT "1LT" IS ON AND GREEN "STOPPED" PILOT LIGHT "2LT" IS OFF.
3. WITH H-O-A SELECTOR SWITCH "1SS" IN "AUTO" POSITION, CLOSING OF MAINTAINED CONTACT FROM CONTROLNET INTERFACE CONTACT STARTS MOTOR, RED "RUNNING" PILOT LIGHT "1LT" IS ON, GREEN "STOPPED" PILOT LIGHT "2LT" IS OFF.
4. WITH H-O-A SELECTOR SWITCH "1SS" IN ANY POSITION, OPENING OF MAINTAINED REMOTE "EMERGENCY STOP" CONTACTS "ES" STOPS MOTOR, GREEN "STOPPED" PILOT LIGHT "2LT" IS ON, RED "RUNNING" PILOT LIGHT "1LT" IS OFF.
5. WITH H-O-A SELECTOR SWITCH "1SS" IN "HAND" OR "AUTO" POSITION, PRESS MAINTAINED ACTION, ROTARY RELEASE "STOP" PUSHBUTTON, MOTOR STOPS, GREEN "STOPPED" PILOT LIGHT "2LT" IS ON, RED "RUNNING" PILOT LIGHT "1LT" IS OFF.

MOTOR CONTROL DIAGRAM – SLUDGE TH. DECANT PUMP (P-1703)

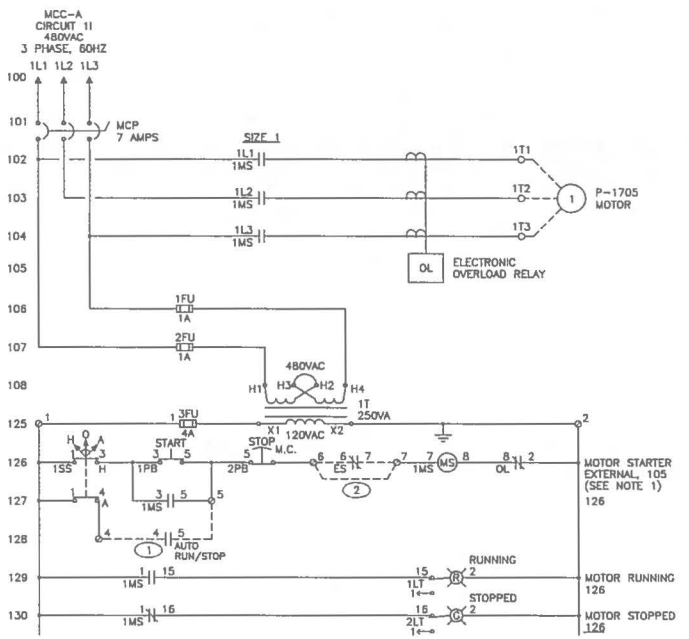

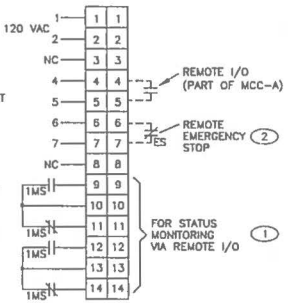

SEQUENCE OF OPERATION

1. WITH H-O-A SELECTOR SWITCH "1SS" IN ANY POSITION AND MOTOR NOT RUNNING, GREEN "STOPPED" PILOT LIGHT "2LT" IS ON, RED "RUNNING" PILOT LIGHT "1LT" IS OFF.
2. WITH H-O-A SELECTOR SWITCH "1SS" IN "HAND" POSITION, PRESS "START" PUSHBUTTON "1PB", MOTOR STARTS, RED "RUNNING" PILOT LIGHT "1LT" IS ON AND GREEN "STOPPED" PILOT LIGHT "2LT" IS OFF.
3. WITH H-O-A SELECTOR SWITCH "1SS" IN "AUTO" POSITION, CLOSING OF MAINTAINED CONTACT FROM CONTROLNET INTERFACE CONTACT STARTS MOTOR, RED "RUNNING" PILOT LIGHT "1LT" IS ON, GREEN "STOPPED" PILOT LIGHT "2LT" IS OFF.
4. WITH H-O-A SELECTOR SWITCH "1SS" IN ANY POSITION, OPENING OF MAINTAINED REMOTE "EMERGENCY STOP" CONTACTS "ES" STOPS MOTOR, GREEN "STOPPED" PILOT LIGHT "2LT" IS ON, RED "RUNNING" PILOT LIGHT "1LT" IS OFF.
5. WITH H-O-A SELECTOR SWITCH "1SS" IN "HAND" OR "AUTO" POSITION, PRESS MAINTAINED ACTION, ROTARY RELEASE "STOP" PUSHBUTTON, MOTOR STOPS, GREEN "STOPPED" PILOT LIGHT "2LT" IS ON, RED "RUNNING" PILOT LIGHT "1LT" IS OFF.

MOTOR CONTROL DIAGRAM – LLW EVAP. SUPPLY PUMP (P-1705)

GENERAL NOTES

1. NUMBERS ON THE RIGHT SIDE OF LADDER DIAGRAMS INDICATE DIAGRAM LINE NUMBERS FOR CONTROL DEVICE CONTACTS. UNDERLINED NUMBER INDICATES A NORMALLY CLOSED CONTACT.
2. MOTOR CONTROL DIAGRAM TO BE PROVIDED TO MCC MANUFACTURER WITH SPECIFICATION SECTION 26 2419, MOTOR CONTROL CENTERS.

KEYED NOTES

(1) PROVIDE AND INSTALL ADDITIONAL CONTROL RELAYS AND WIRING AS REQUIRED TO ALLOW MOTOR CONTROL AND STATUS INDICATION FROM THE REMOTE I/O PROVIDED WITH THE MCC.

(2) JUMPER INSTALLED BETWEEN TERMINALS 6 & 7. REMOTE EMERGENCY STOP SWITCH OPTION IS NOT USED IN THE FIELD.

NO	DATE	CLASS REV	ADC	DESCRIPTION	DRWN	DES	CHKD	SUB	APP

AECOM

RLWTF-UP LOW LEVEL WASTE SUBPROJECT

MOTOR CONTROL DIAGRAMS

DRAWN	V DAWSON
DESIGN	S. MOORE
CHECKED	G. MOE
DATE	5/8/14

BLDG. 230 TA-50

SUBMITTED MANNY TARIN — APPROVED FOR RELEASE ED ARTIGLIA

Los Alamos NATIONAL LABORATORY PO Box 1663 Los Alamos, New Mexico 87545

SHEET E-6111

367 OF 434

CLASSIFICATION — REVIEWER — DATE

PROJECT ID 100761 — DRAWING NO C55864 — REV 0

File Location: P:\RLWTF LOW-LEVEL WASTE FACILITY\300 CAD\C55864 MAIN BUILDING\SHEETS\18 ELECTRICAL\55864-E-6111-R0.DWG
Plotted By: MOORE, STEPHEN Plot Date: Monday, May 05, 2014

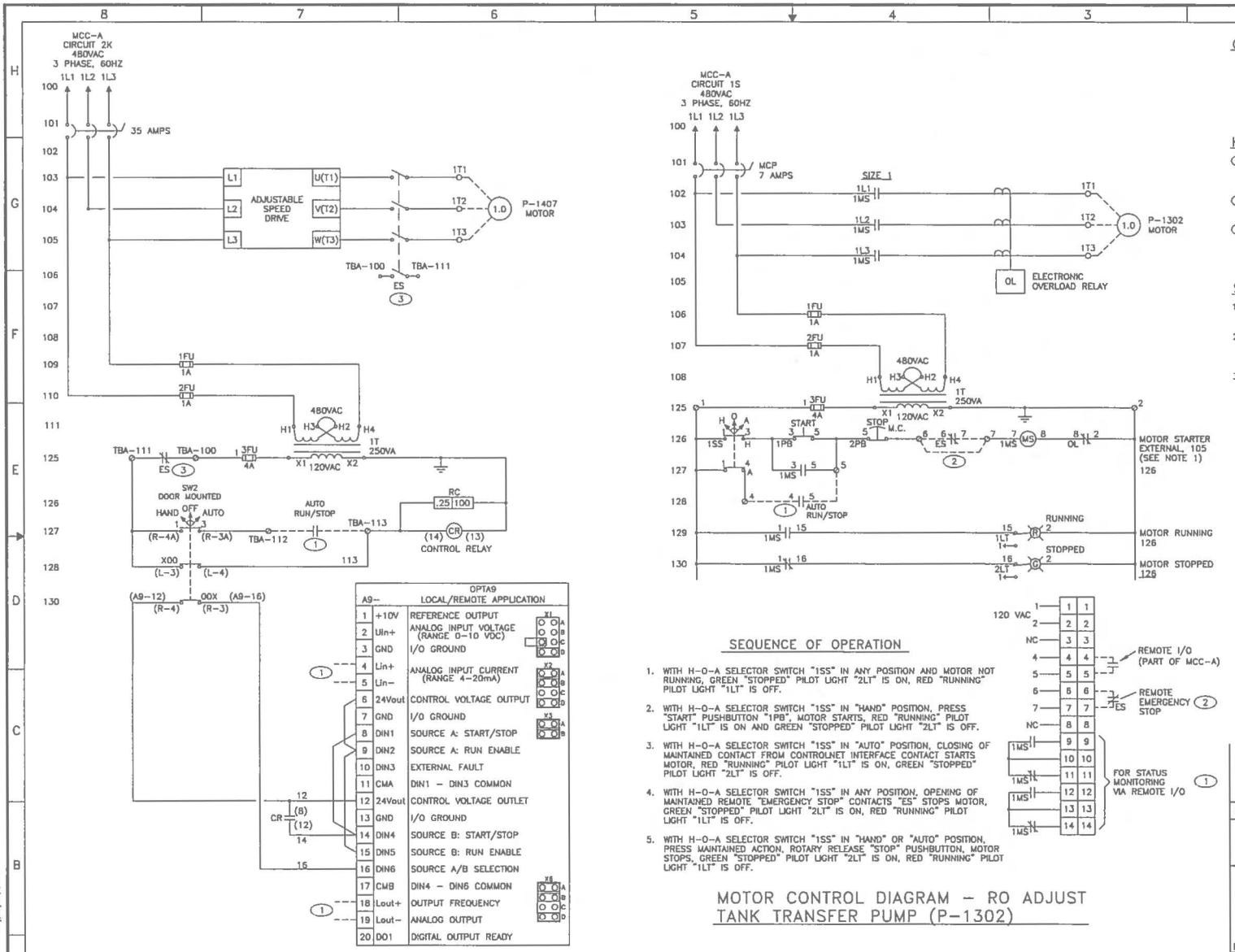

MOTOR CONTROL DIAGRAM – IX FEED PUMP (P-1407)

SEQUENCE OF OPERATION

1. WITH H-O-A SELECTOR SWITCH "1SS" IN ANY POSITION AND MOTOR NOT RUNNING, GREEN "STOPPED" PILOT LIGHT "2LT" IS ON, RED "RUNNING" PILOT LIGHT "1LT" IS OFF.
2. WITH H-O-A SELECTOR SWITCH "1SS" IN "HAND" POSITION, PRESS "START" PUSHBUTTON "1PB", MOTOR STARTS, RED "RUNNING" PILOT LIGHT "1LT" IS ON AND GREEN "STOPPED" PILOT LIGHT "2LT" IS OFF.
3. WITH H-O-A SELECTOR SWITCH "1SS" IN "AUTO" POSITION, CLOSING OF MAINTAINED CONTACT FROM CONTROLNET INTERFACE CONTACT STARTS MOTOR, RED "RUNNING" PILOT LIGHT "1LT" IS ON, GREEN "STOPPED" PILOT LIGHT "2LT" IS OFF.
4. WITH H-O-A SELECTOR SWITCH "1SS" IN ANY POSITION, OPENING OF MAINTAINED REMOTE "EMERGENCY STOP" CONTACTS "ES" STOPS MOTOR, GREEN "STOPPED" PILOT LIGHT "2LT" IS ON, RED "RUNNING" PILOT LIGHT "1LT" IS OFF.
5. WITH H-O-A SELECTOR SWITCH "1SS" IN "HAND" OR "AUTO" POSITION, PRESS MAINTAINED ACTION, ROTARY RELEASE "STOP" PUSHBUTTON, MOTOR STOPS, GREEN "STOPPED" PILOT LIGHT "2LT" IS ON, RED "RUNNING" PILOT LIGHT "1LT" IS OFF.

MOTOR CONTROL DIAGRAM – RO ADJUST TANK TRANSFER PUMP (P-1302)

GENERAL NOTES

1. NUMBERS ON THE RIGHT SIDE OF LADDER DIAGRAMS INDICATE DIAGRAM LINE NUMBERS FOR CONTROL DEVICE CONTACTS. UNDERLINED NUMBER INDICATES A NORMALLY CLOSED CONTACT.
2. MOTOR CONTROL DIAGRAM TO BE PROVIDED TO MCC MANUFACTURER WITH SPECIFICATION SECTION 26 2419, MOTOR CONTROL CENTERS.

KEYED NOTES

(1) PROVIDE AND INSTALL ADDITIONAL CONTROL RELAYS AND WIRING AS REQUIRED TO ALLOW MOTOR CONTROL AND STATUS INDICATION FROM THE REMOTE I/O PROVIDED WITH THE MCC.

(2) JUMPER INSTALLED BETWEEN TERMINALS 6 & 7. REMOTE EMERGENCY STOP SWITCH OPTION IS NOT USED IN THE FIELD.

(3) PROVIDE TERMINAL POINTS AND WIRING TO ALLOW FIELD CONNECTION TO AUXILIARY CONTACTS ON MOTOR DISCONNECT. WIRING METHODS SHALL ENSURE MOTOR ADJUSTABLE SPEED DRIVE WILL NOT OPERATE WHEN THE DISCONNECT IS NOT CLOSED.

SEQUENCE OF OPERATION FOR ASD

1. WITH HOA SELECTOR SWITCH IN THE "OFF" POSITION, MOTOR WILL BE STOPPED.
2. WITH HOA SELECTOR SWITCH IN THE "HAND" POSITION, MOTOR WILL START AND OPERATE UNDER SPEED CONTROL FROM THE ASD KEYPAD LOCATED IN THE MCC.
3. WITH HOA SELECTOR SWITCH IN THE "AUTO" POSITION, MOTOR IS STARTED AND STOPPED REMOTELY VIA THE REMOTE I/O AND SPEED CONTROL IS VIA ASD ANALOG INPUT FROM THE REMOTE I/O.

NO	DATE	CLASS REV	ADC	DESCRIPTION	DWN	DES	CHKD	SUB	APP

AECOM

RLWTF-UP LOW LEVEL WASTE SUBPROJECT

MOTOR CONTROL DIAGRAMS

DRAWN	V DAVISON
DESIGN	S MOORE
CHECKED	D MOE
DATE	5/8/14

BLDG. 230 TA-50

SUBMITTED: MANNY TARIN

APPROVED FOR RELEASE: ED ARTIOLIA

Los Alamos NATIONAL LABORATORY PO Box 1663 Los Alamos, New Mexico 87545

SHEET E-6112

368 OF 434

CLASSIFICATION | REVIEWER | DATE

PROJECT ID 100761 | DRAWING NO C55864 | REV 0

EUGENE DAVID MOE NEW MEXICO 21389 PROFESSIONAL ENGINEER 5/8/14

File Location: P:\RLWTF LOW-LEVEL WASTE FACILITY\300 CAD\C55864 MAIN BUILDING\PLOTS\16 ELECTRICAL\C55864-E-6112-R0.DWG
Plotted By: MOORE, STEPHEN Plot Date: Monday, May 05, 2014

6112

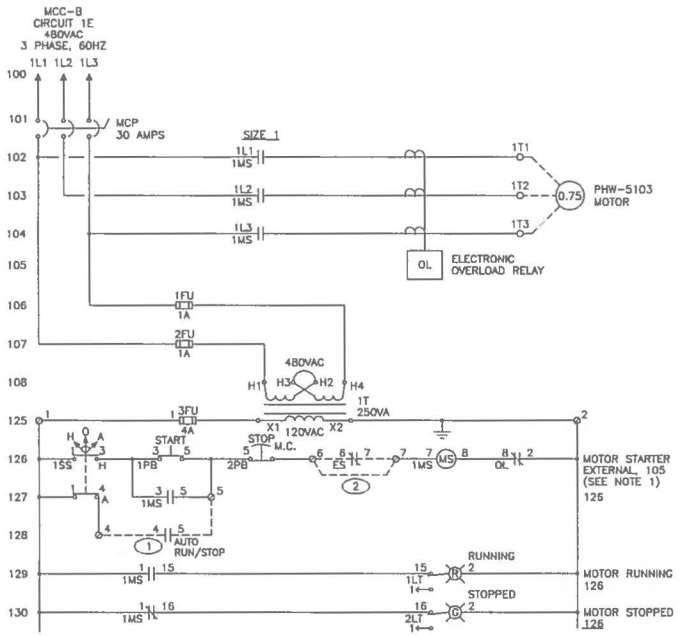

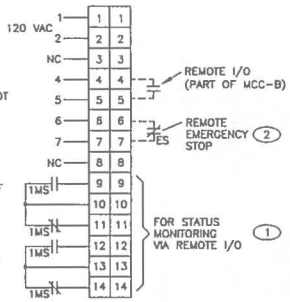

SEQUENCE OF OPERATION

1. WITH H-O-A SELECTOR SWITCH "1SS" IN ANY POSITION AND MOTOR NOT RUNNING, GREEN "STOPPED" PILOT LIGHT "2LT" IS ON, RED "RUNNING" PILOT LIGHT "1LT" IS OFF.
2. WITH H-O-A SELECTOR SWITCH "1SS" IN "HAND" POSITION, PRESS "START" PUSHBUTTON "1PB", MOTOR STARTS, RED "RUNNING" PILOT LIGHT "1LT" IS ON AND GREEN "STOPPED" PILOT LIGHT "2LT" IS OFF.
3. WITH H-O-A SELECTOR SWITCH "1SS" IN "AUTO" POSITION, CLOSING OF MAINTAINED CONTACT FROM CONTROLNET INTERFACE CONTACT STARTS MOTOR, RED "RUNNING" PILOT LIGHT "1LT" IS ON, GREEN "STOPPED" PILOT LIGHT "2LT" IS OFF.
4. WITH H-O-A SELECTOR SWITCH "1SS" IN ANY POSITION, OPENING OF MAINTAINED REMOTE "EMERGENCY STOP" CONTACTS "ES" STOPS MOTOR, GREEN "STOPPED" PILOT LIGHT "2LT" IS ON, RED "RUNNING" PILOT LIGHT "1LT" IS OFF.
5. WITH H-O-A SELECTOR SWITCH "1SS" IN "HAND" OR "AUTO" POSITION, PRESS MAINTAINED ACTION, ROTARY RELEASE "STOP" PUSHBUTTON, MOTOR STOPS, GREEN "STOPPED" PILOT LIGHT "2LT" IS ON, RED "RUNNING" PILOT LIGHT "1LT" IS OFF.

MOTOR CONTROL DIAGRAM – HEAT COIL CIRCULATION PUMP. (PHW-5103)

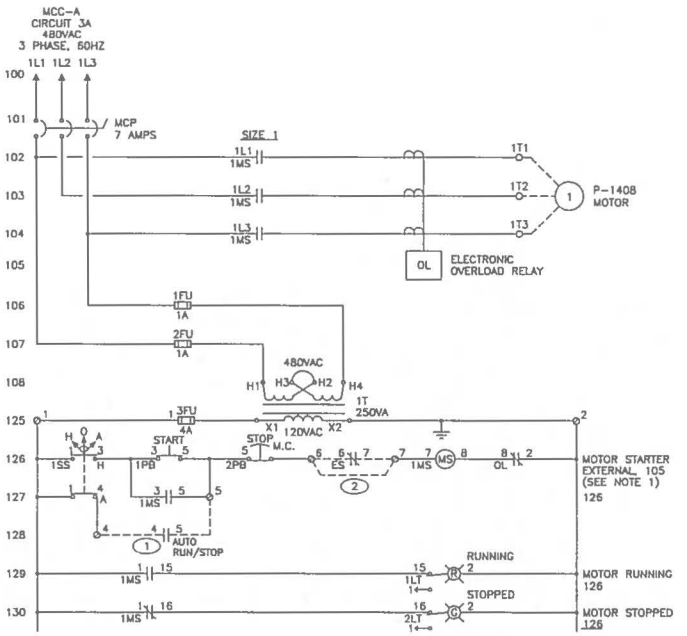

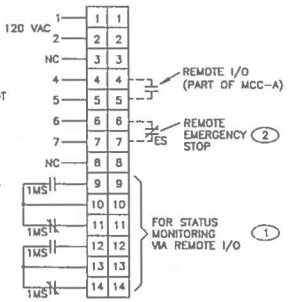

SEQUENCE OF OPERATION

1. WITH H-O-A SELECTOR SWITCH "1SS" IN ANY POSITION AND MOTOR NOT RUNNING, GREEN "STOPPED" PILOT LIGHT "2LT" IS ON, RED "RUNNING" PILOT LIGHT "1LT" IS OFF.
2. WITH H-O-A SELECTOR SWITCH "1SS" IN "HAND" POSITION, PRESS "START" PUSHBUTTON "1PB", MOTOR STARTS, RED "RUNNING" PILOT LIGHT "1LT" IS ON AND GREEN "STOPPED" PILOT LIGHT "2LT" IS OFF.
3. WITH H-O-A SELECTOR SWITCH "1SS" IN "AUTO" POSITION, CLOSING OF MAINTAINED CONTACT FROM CONTROLNET INTERFACE CONTACT STARTS MOTOR, RED "RUNNING" PILOT LIGHT "1LT" IS ON, GREEN "STOPPED" PILOT LIGHT "2LT" IS OFF.
4. WITH H-O-A SELECTOR SWITCH "1SS" IN ANY POSITION, OPENING OF MAINTAINED REMOTE "EMERGENCY STOP" CONTACTS "ES" STOPS MOTOR, GREEN "STOPPED" PILOT LIGHT "2LT" IS ON, RED "RUNNING" PILOT LIGHT "1LT" IS OFF.
5. WITH H-O-A SELECTOR SWITCH "1SS" IN "HAND" OR "AUTO" POSITION, PRESS MAINTAINED ACTION, ROTARY RELEASE "STOP" PUSHBUTTON, MOTOR STOPS, GREEN "STOPPED" PILOT LIGHT "2LT" IS ON, RED "RUNNING" PILOT LIGHT "1LT" IS OFF.

MOTOR CONTROL DIAGRAM – WATER REUSE PUMP (P-1408)

GENERAL NOTES

1. NUMBERS ON THE RIGHT SIDE OF LADDER DIAGRAMS INDICATE DIAGRAM LINE NUMBERS FOR CONTROL DEVICE CONTACTS. UNDERLINED NUMBER INDICATES A NORMALLY CLOSED CONTACT.
2. MOTOR CONTROL DIAGRAM TO BE PROVIDED TO MCC MANUFACTURER WITH SPECIFICATION SECTION 26 2419, MOTOR CONTROL CENTERS.

KEYED NOTES

(1) PROVIDE AND INSTALL ADDITIONAL CONTROL RELAYS AND WIRING AS REQUIRED TO ALLOW MOTOR CONTROL AND STATUS INDICATION FROM THE REMOTE I/O PROVIDED WITH THE MCC.

(2) JUMPER INSTALLED BETWEEN TERMINALS 6 & 7. REMOTE EMERGENCY STOP SWITCH OPTION IS NOT USED IN THE FIELD.

NO	DATE	CLASS REV	ADC	DESCRIPTION	DWN	DES	CHKD	SUB	APP

AECOM

RLWTF-UP LOW LEVEL WASTE SUBPROJECT

MOTOR CONTROL DIAGRAMS

DRAWN	V DAVISON
DESIGN	S MOORE
CHECKED	D MOE
DATE	5/6/14

BLDG. 230 TA-50

SUBMITTED MANNY TARIN

APPROVED FOR RELEASE ED ARTIGLIA

Los Alamos NATIONAL LABORATORY PO Box 1663 Los Alamos, New Mexico 87545

SHEET E-6113

369 OF 434

CLASSIFICATION REVIEWER DATE

PROJECT ID 100761

DRAWING NO C55864

REV 0

EUGENE DAVID MOE NEW MEXICO 21389 REGISTERED PROFESSIONAL ENGINEER

File Location: P:\RLWTF LOW-LEVEL WASTE FACILITY\300 CAD\C55864 MAIN BUILDING\SHEETS\18 ELECTRICAL\55864-E-6113-RD.DWG
Plotted By: MOE, STEVEN Plot Date: Monday, May 05, 2014

12:20 : 12/20

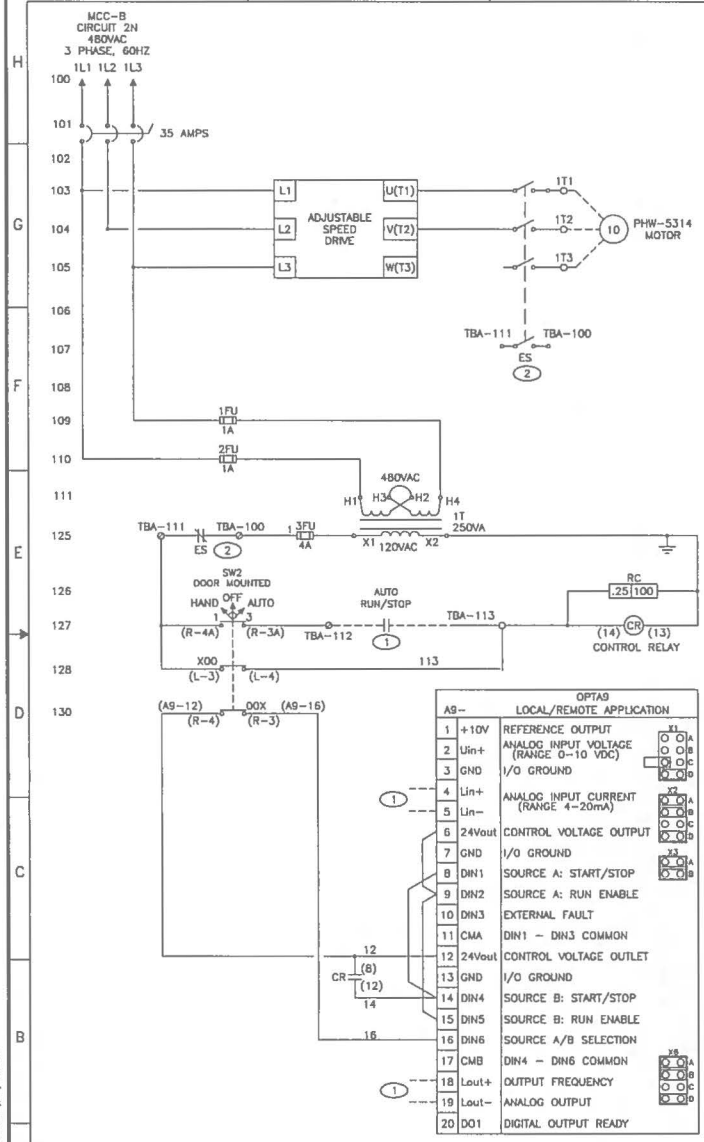

MOTOR CONTROL DIAGRAM – HEAT RECOVERY PUMP (PHW-5314)

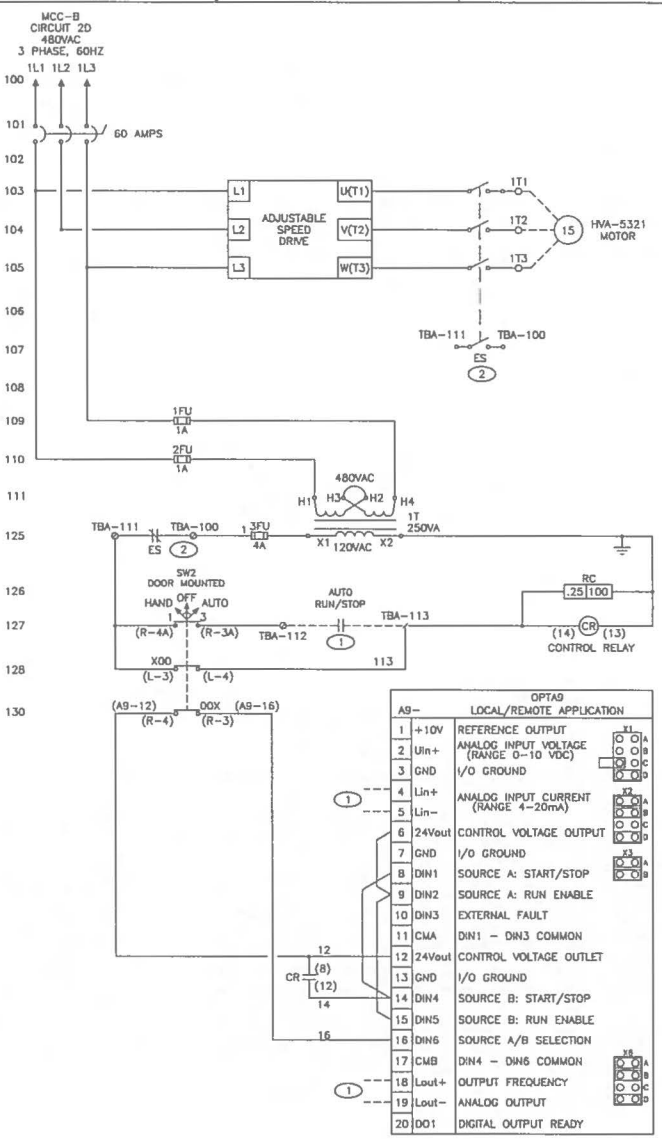

MOTOR CONTROL DIAGRAM – HVAC SUPPLY FAN (HVA-5321)

GENERAL NOTES

1. NUMBERS ON THE RIGHT SIDE OF LADDER DIAGRAMS INDICATE DIAGRAM LINE NUMBERS FOR CONTROL DEVICE CONTACTS. UNDERLINED NUMBER INDICATES A NORMALLY CLOSED CONTACT.
2. MOTOR CONTROL DIAGRAM TO BE PROVIDED TO MCC MANUFACTURER WITH SPECIFICATION SECTION 26 2419, MOTOR CONTROL CENTERS.

KEYED NOTES

(1) PROVIDE AND INSTALL ADDITIONAL CONTROL RELAYS AND WIRING AS REQUIRED TO ALLOW MOTOR CONTROL AND STATUS INDICATION FROM THE REMOTE I/O PROVIDED WITH THE MCC.

(2) PROVIDE TERMINAL POINTS AND WIRING TO ALLOW FIELD CONNECTION TO AUXILIARY CONTACTS ON MOTOR DISCONNECT. WIRING METHODS SHALL ENSURE MOTOR ADJUSTABLE SPEED DRIVE WILL NOT OPERATE WHEN THE DISCONNECT IS NOT CLOSED.

SEQUENCE OF OPERATION FOR ASD

1. WITH HOA SELECTOR SWITCH IN THE "OFF" POSITION, MOTOR WILL BE STOPPED.
2. WITH HOA SELECTOR SWITCH IN THE "HAND" POSITION, MOTOR WILL START AND OPERATE UNDER SPEED CONTROL FROM THE ASD KEYPAD LOCATED IN THE MCC.
3. WITH HOA SELECTOR SWITCH IN THE "AUTO" POSITION, MOTOR IS STARTED AND STOPPED REMOTELY VIA THE REMOTE I/O AND SPEED CONTROL IS VIA ASD ANALOG INPUT FROM THE REMOTE I/O.

NO	DATE	CLASS REV	ADC	DESCRIPTION	DWN	DES	CHKD	SUB	APP

AECOM

RLWTF-UP LOW LEVEL WASTE SUBPROJECT

MOTOR CONTROL DIAGRAMS

BLDG. 230 TA-50

DRAWN	V DAVISON
DESIGN	S MOORE
CHECKED	G MOE
DATE	5/8/14

SUBMITTED MANNY TARIN

APPROVED FOR RELEASE ED ARTIGLIA

Los Alamos NATIONAL LABORATORY PO Box 1663 Los Alamos, New Mexico 87545

SHEET E-6120

370 OF 434

CLASSIFICATION REVIEWER DATE

PROJECT ID 100761 DRAWING NO C55864 REV 0

EUGENE DAVID MOE 21359 NEW MEXICO PROFESSIONAL ENGINEER 07 May 2014

12421 :

File Location: P:\RLWTF LOW-LEVEL WASTE FACILITY\300 CAD\C55864 MAIN BUILDING\SHEETS\18 ELECTRICAL\55864-E-6120-MD.DWG
Plotted By: MOE, STEVEN Plot Date: Monday, May 05, 2014

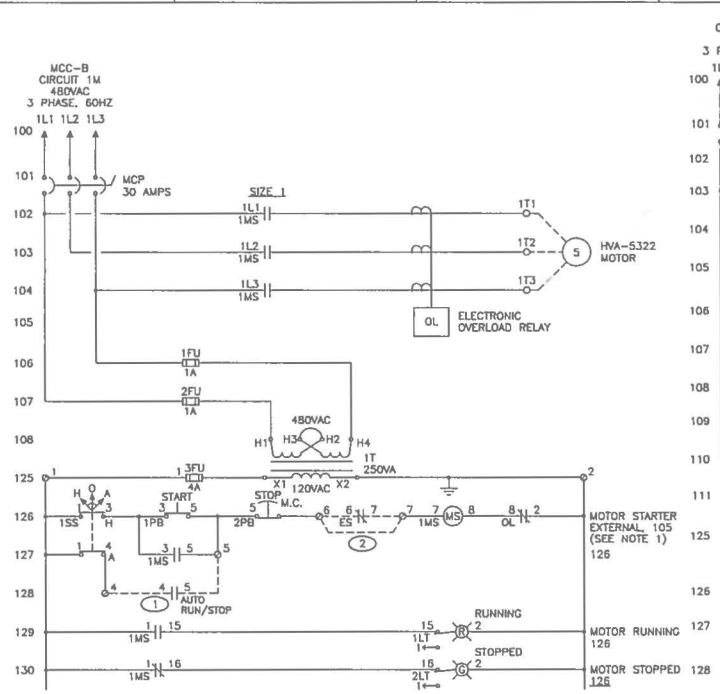

SEQUENCE OF OPERATION

1. WITH H-O-A SELECTOR SWITCH "1SS" IN ANY POSITION AND MOTOR NOT RUNNING, GREEN "STOPPED" PILOT LIGHT "2LT" IS ON, RED "RUNNING" PILOT LIGHT "1LT" IS OFF.
2. WITH H-O-A SELECTOR SWITCH "1SS" IN "HAND" POSITION, PRESS "START" PUSHBUTTON "1PB", MOTOR STARTS, RED "RUNNING" PILOT LIGHT "1LT" IS ON AND GREEN "STOPPED" PILOT LIGHT "2LT" IS OFF.
3. WITH H-O-A SELECTOR SWITCH "1SS" IN "AUTO" POSITION, CLOSING OF MAINTAINED CONTACT FROM CONTROLNET INTERFACE CONTACT STARTS MOTOR, RED "RUNNING" PILOT LIGHT "1LT" IS ON, GREEN "STOPPED" PILOT LIGHT "2LT" IS OFF.
4. WITH H-O-A SELECTOR SWITCH "1SS" IN ANY POSITION, OPENING OF MAINTAINED REMOTE "EMERGENCY STOP" CONTACTS "ES" STOPS MOTOR, GREEN "STOPPED" PILOT LIGHT "2LT" IS ON, RED "RUNNING" PILOT LIGHT "1LT" IS OFF.
5. WITH H-O-A SELECTOR SWITCH "1SS" IN "HAND" OR "AUTO" POSITION, PRESS MAINTAINED ACTION, ROTARY RELEASE "STOP" PUSHBUTTON, MOTOR STOPS, GREEN "STOPPED" PILOT LIGHT "2LT" IS ON, RED "RUNNING" PILOT LIGHT "1LT" IS OFF.

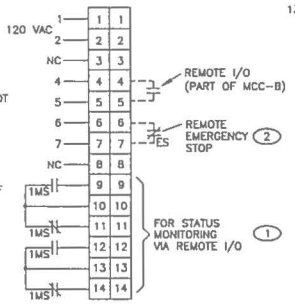

MOTOR CONTROL DIAGRAM - HVAC SUPPLY FAN (HVA-5322)

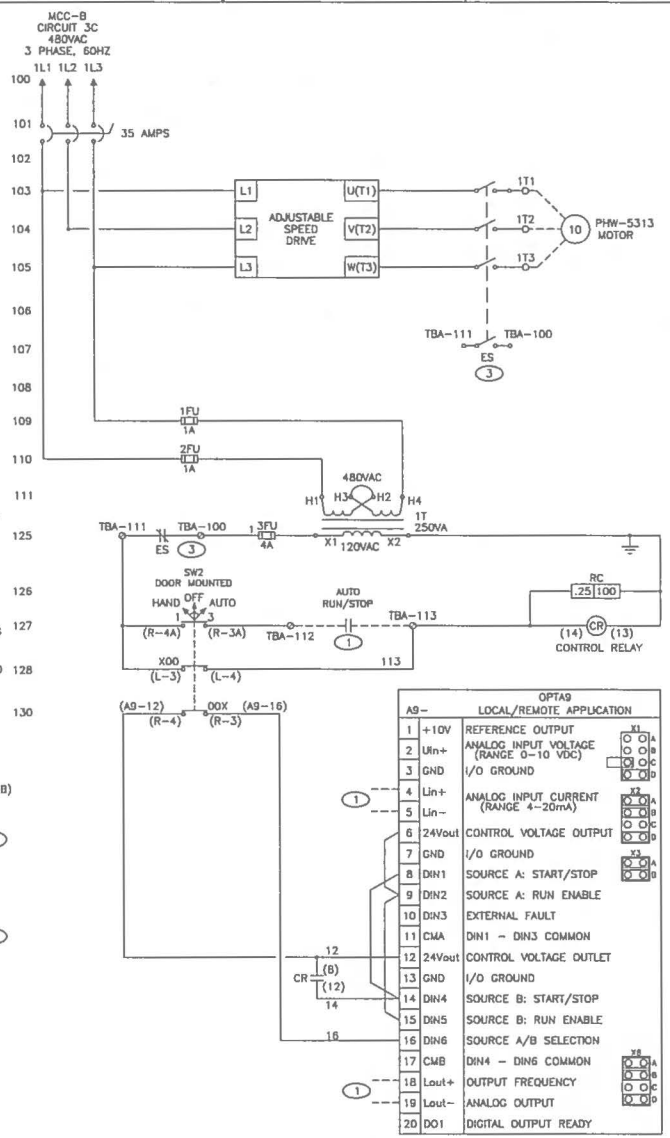

MOTOR CONTROL DIAGRAM - HEAT RECOVERY PUMP (PHW-5313)

GENERAL NOTES

1. NUMBERS ON THE RIGHT SIDE OF LADDER DIAGRAMS INDICATE DIAGRAM LINE NUMBERS FOR CONTROL DEVICE CONTACTS. UNDERLINED NUMBER INDICATES A NORMALLY CLOSED CONTACT.
2. MOTOR CONTROL DIAGRAM TO BE PROVIDED TO MCC MANUFACTURER WITH SPECIFICATION SECTION 26 2419, MOTOR CONTROL CENTERS.

KEYED NOTES

(1) PROVIDE AND INSTALL ADDITIONAL CONTROL RELAYS AND WIRING AS REQUIRED TO ALLOW MOTOR CONTROL AND STATUS INDICATION FROM THE REMOTE I/O PROVIDED WITH THE MCC.

(2) JUMPER INSTALLED BETWEEN TERMINALS 6 & 7. REMOTE EMERGENCY STOP SWITCH OPTION IS NOT USED IN THE FIELD.

(3) PROVIDE TERMINAL POINTS AND WIRING TO ALLOW FIELD CONNECTION TO AUXILIARY CONTACTS ON MOTOR DISCONNECT. WIRING METHODS SHALL ENSURE MOTOR ADJUSTABLE SPEED DRIVE WILL NOT OPERATE WHEN THE DISCONNECT IS NOT CLOSED.

SEQUENCE OF OPERATION FOR ASD

1. WITH HOA SELECTOR SWITCH IN THE "OFF" POSITION, MOTOR WILL BE STOPPED.
2. WITH HOA SELECTOR SWITCH IN THE "HAND" POSITION, MOTOR WILL START AND OPERATE UNDER SPEED CONTROL FROM THE ASD KEYPAD LOCATED IN THE MCC.
3. WITH HOA SELECTOR SWITCH IN THE "AUTO" POSITION, MOTOR IS STARTED AND STOPPED REMOTELY VIA THE REMOTE I/O AND SPEED CONTROL IS VIA ASD ANALOG INPUT FROM THE REMOTE I/O.

NO	DATE	CLASS REV	ADC	DESCRIPTION	DWN	DES	CHKD	SUB	APP

AECOM

RLWTF-UP LOW LEVEL WASTE SUBPROJECT

MOTOR CONTROL DIAGRAMS

DRAWN	V DAVISON	
DESIGN	S MOORE	
CHECKED	G MOE	
DATE	5/8/14	

BLDG. 230 TA-50

SUBMITTED MANNY TARIN — APPROVED FOR RELEASE ED ARTIOLIA

Los Alamos NATIONAL LABORATORY PO Box 1663 Los Alamos, New Mexico 87545

SHEET E-6121

371 OF 434

CLASSIFICATION — REVIEWER — DATE

PROJECT ID 100761 — DRAWING NO C55864 — REV 0

File Location: P:\RLWTF LOW-LEVEL WASTE FACILITY\500 CAD\C55864 MAIN BUILDING\SHEETS\10 ELECTRICAL\55864-E-6121-MD.DWG
Plotted By: MOORE, STEPHEN Plot Date: Monday, May 05, 2014

22in21

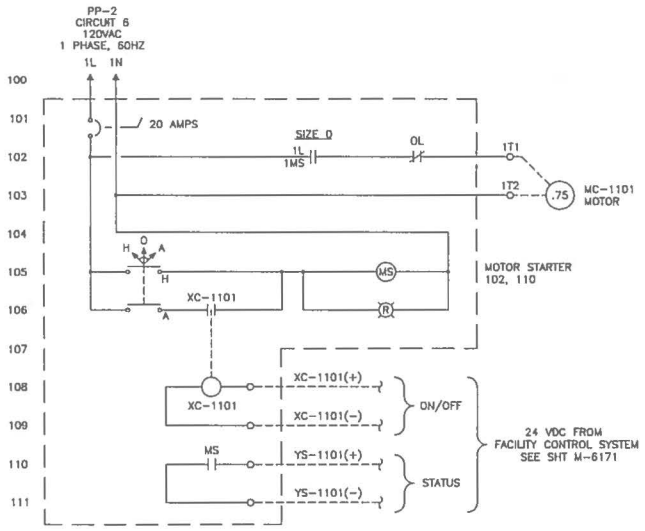

REMOTE STARTER CONTROL DIAGRAM – TK-1101 MIXER MOTOR (MC-1101)

SCALE: NONE

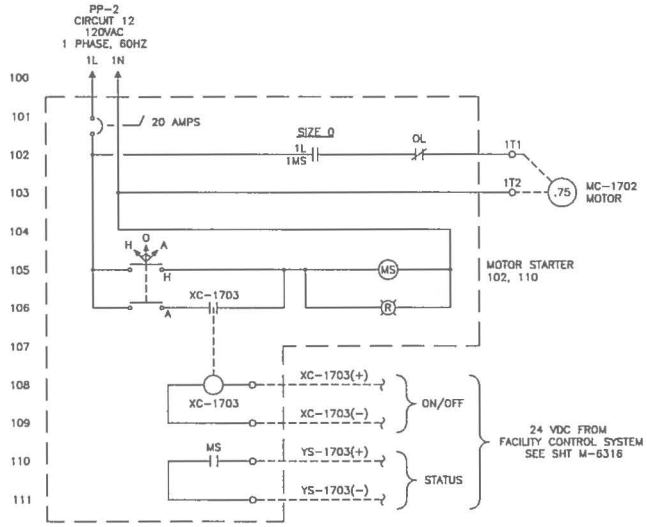

REMOTE STARTER CONTROL DIAGRAM – TK-1702 MIXER MOTOR (MC-1702)

SCALE: NONE

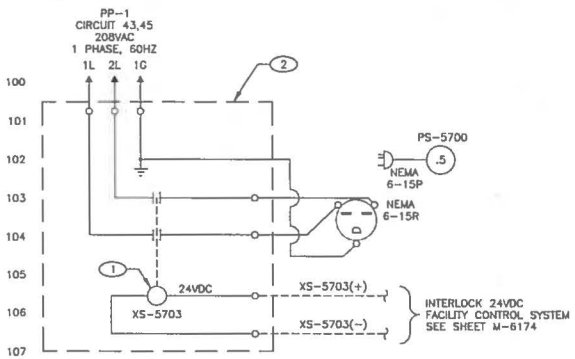

REMOTE INTERLOCK CONTROL DIAGRAM – SUMP PUMP (PS-5700)

SCALE: NONE

KEYED NOTES

1. PROVIDE INTERPOSING 24 VDC RELAY TO INTERRUPT POWER IN EVENT OF HIGH EFFLUENT LEVEL IN TK-1101. EATON MODEL #BFD20L 2 POLE, 24VDC COIL.
2. PROVIDE 8"x6"x6" SCREW COVER RELAY BOX. HOFFMAN #A8066SC WITH INTERNAL MOUNTING PANEL #ABP6.

NO	DATE	CLASS REV	ADC	DESCRIPTION	DWN	DES	CHKD	SUB	APP

AECOM

RLWTF-UP LOW LEVEL WASTE SUBPROJECT

REMOTE STARTER MOTOR CONTROL DIAGRAM

BLDG. 230 TA-50

DRAWN	V DAVISON
DESIGN	S MOORE
CHECKED	G MOE
DATE	5/6/14

SUBMITTED: MANNY TARIN

APPROVED FOR RELEASE: ED ARTIGLIA

Los Alamos NATIONAL LABORATORY PO Box 1663 Los Alamos, New Mexico 87545

SHEET E-6130

372 OF 434

CLASSIFICATION | REVIEWER | DATE

PROJECT ID 100761 | DRAWING NO C55864 | REV 0

EUGENE DAVID MOE NEW MEXICO 21380 PROFESSIONAL ENGINEER

File Location: P:\RLWTF LOW-LEVEL WASTE FACILITY\500 CAD\C55864 MAIN BUILDING\SHEETS\18 ELECTRICAL\55864-E-6130-R0.DWG
Plotted By: MOORE, STEPHEN Plot Date: Monday, May 05, 2014

12423

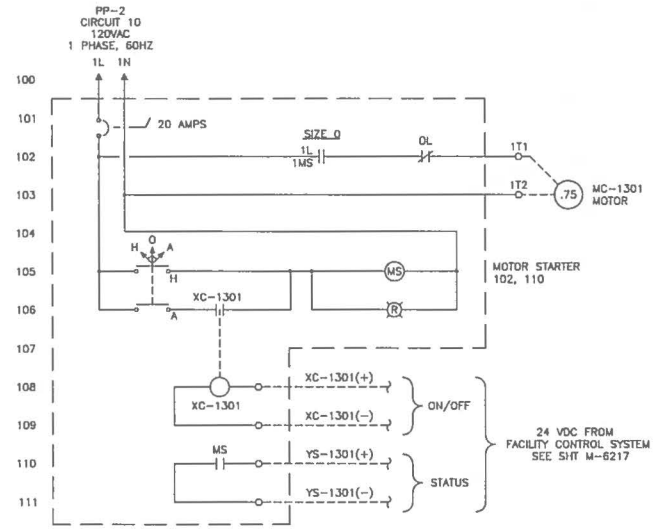

REMOTE STARTER CONTROL DIAGRAM – TK-1301 MIXER MOTOR (MC-1301)

SCALE: NONE

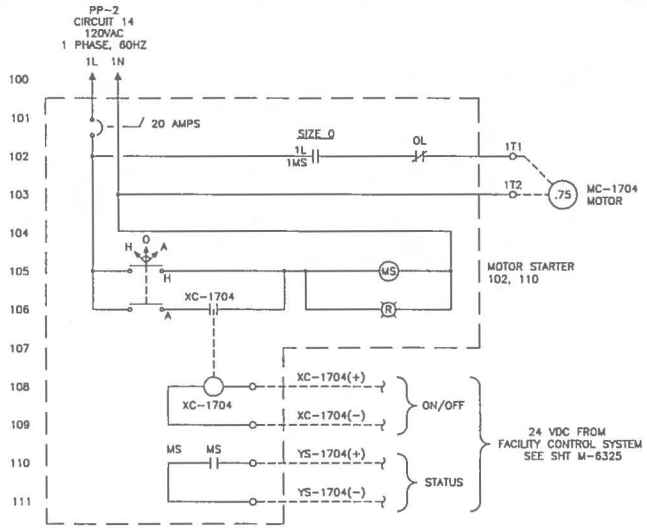

REMOTE STARTER CONTROL DIAGRAM – TK-1704 MIXER MOTOR (MC-1704)

SCALE: NONE

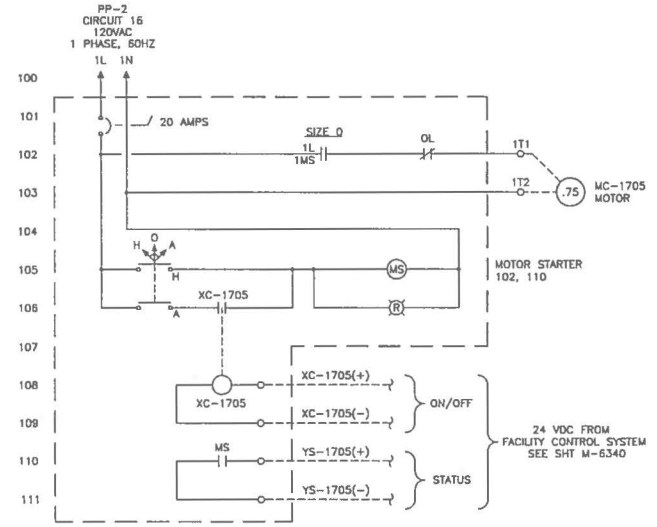

REMOTE STARTER CONTROL DIAGRAM – TK-1705 MIXER MOTOR (MC-1705)

SCALE: NONE

NO	DATE	CLASS REV	ADC	DESCRIPTION	DWN	DES	CHKD	SUB	APP

AECOM

RLWTF-UP LOW LEVEL WASTE SUBPROJECT

REMOTE STARTER MOTOR CONTROL DIAGRAM

DRAWN	V DAVISON
DESIGN	S MOORE
CHECKED	G MOE
DATE	5/8/14

BLDG. 230 TA-50

SUBMITTED: MANNY TARIN

APPROVED FOR RELEASE: ED ARTIGLIA

Los Alamos NATIONAL LABORATORY PO Box 1663 Los Alamos, New Mexico 87545

CLASSIFICATION | REVIEWER | DATE

PROJECT ID: 100761 | DRAWING NO: C55864 | REV: 0

SHEET: E-6131

373 OF 434

EUGENE DAVID MOE NEW MEXICO 21389 PROFESSIONAL ENGINEER 5/8/14

File Location: P:\RLWTF LOW-LEVEL WASTE FACILITY\300 CAD\C55864 MAIN BUILDING\SHEETS\10 ELECTRICAL\S5864-E-6131-RD.DWG
Plotted By: MOORE, STEPHEN Plot Date: Monday, May 05, 2014

in2in2

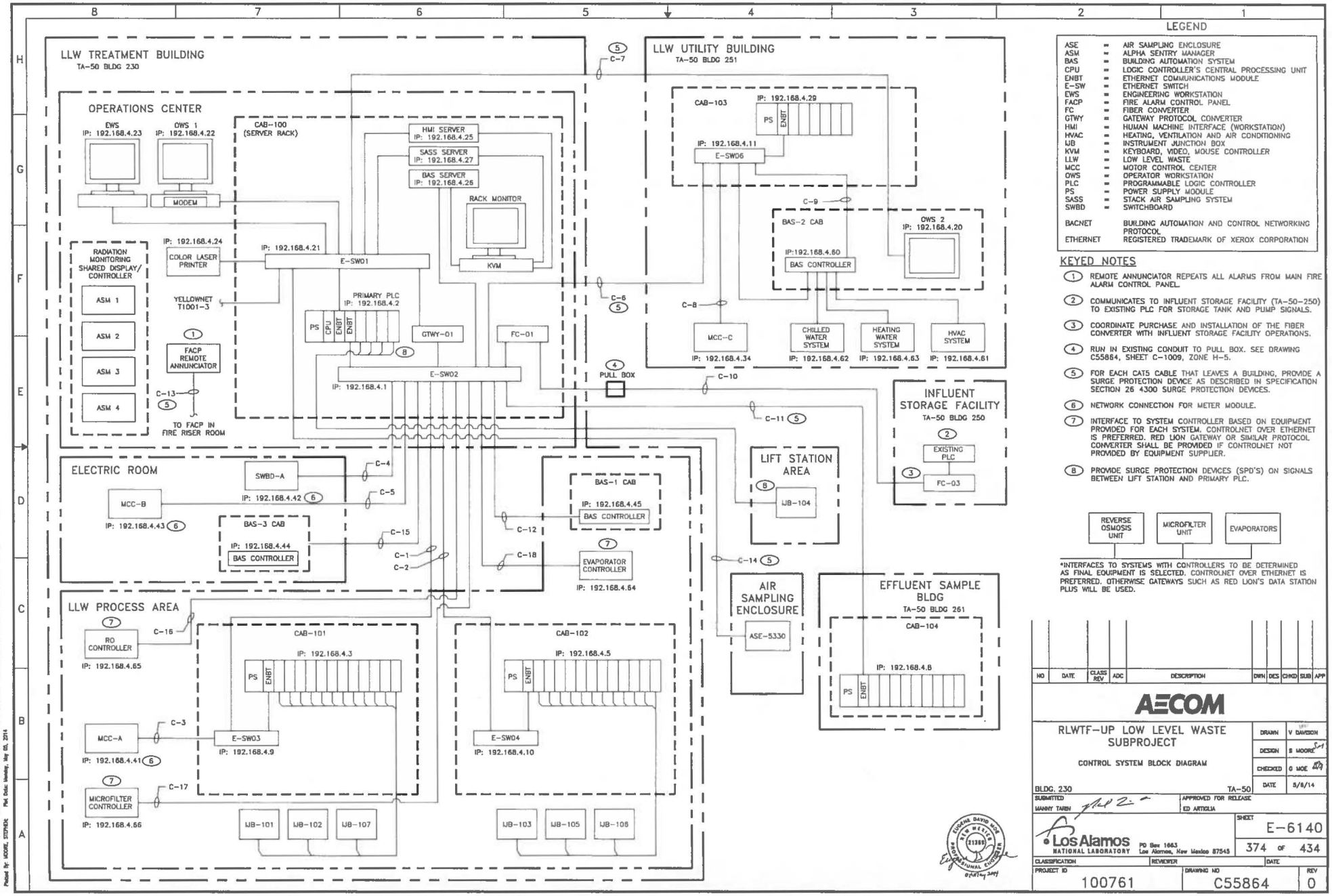

LEGEND

ASE	=	AIR SAMPLING ENCLOSURE
ASM	=	ALPHA SENTRY MANAGER
BAS	=	BUILDING AUTOMATION SYSTEM
CPU	=	LOGIC CONTROLLER'S CENTRAL PROCESSING UNIT
ENBT	=	ETHERNET COMMUNICATIONS MODULE
E-SW	=	ETHERNET SWITCH
EWS	=	ENGINEERING WORKSTATION
FACP	=	FIRE ALARM CONTROL PANEL
FC	=	FIBER CONVERTER
GTWY	=	GATEWAY PROTOCOL CONVERTER
HMI	=	HUMAN MACHINE INTERFACE (WORKSTATION)
HVAC	=	HEATING, VENTILATION AND AIR CONDITIONING
WB	=	INSTRUMENT JUNCTION BOX
KVM	=	KEYBOARD, VIDEO, MOUSE CONTROLLER
LLW	=	LOW LEVEL WASTE
MCC	=	MOTOR CONTROL CENTER
OWS	=	OPERATOR WORKSTATION
PLC	=	PROGRAMMABLE LOGIC CONTROLLER
PS	=	POWER SUPPLY MODULE
SASS	=	STACK AIR SAMPLING SYSTEM
SWBD	=	SWITCHBOARD
BACNET		BUILDING AUTOMATION AND CONTROL NETWORKING PROTOCOL
ETHERNET		REGISTERED TRADEMARK OF XEROX CORPORATION

KEYED NOTES

1. REMOTE ANNUNCIATOR REPEATS ALL ALARMS FROM MAIN FIRE ALARM CONTROL PANEL.
2. COMMUNICATES TO INFLUENT STORAGE FACILITY (TA-50-250) TO EXISTING PLC FOR STORAGE TANK AND PUMP SIGNALS.
3. COORDINATE PURCHASE AND INSTALLATION OF THE FIBER CONVERTER WITH INFLUENT STORAGE FACILITY OPERATIONS.
4. RUN IN EXISTING CONDUIT TO PULL BOX. SEE DRAWING C55864, SHEET C-1009, ZONE H-5.
5. FOR EACH CAT5 CABLE THAT LEAVES A BUILDING, PROVIDE A SURGE PROTECTION DEVICE AS DESCRIBED IN SPECIFICATION SECTION 26 4300 SURGE PROTECTION DEVICES.
6. NETWORK CONNECTION FOR METER MODULE.
7. INTERFACE TO SYSTEM CONTROLLER BASED ON EQUIPMENT PROVIDED FOR EACH SYSTEM. CONTROLNET OVER ETHERNET IS PREFERRED. RED LION GATEWAY OR SIMILAR PROTOCOL CONVERTER SHALL BE PROVIDED IF CONTROLNET NOT PROVIDED BY EQUIPMENT SUPPLIER.
8. PROVIDE SURGE PROTECTION DEVICES (SPD'S) ON SIGNALS BETWEEN LIFT STATION AND PRIMARY PLC.

REVERSE OSMOSIS UNIT | MICROFILTER UNIT | EVAPORATORS

*INTERFACES TO SYSTEMS WITH CONTROLLERS TO BE DETERMINED AS FINAL EQUIPMENT IS SELECTED. CONTROLNET OVER ETHERNET IS PREFERRED. OTHERWISE GATEWAYS SUCH AS RED LION'S DATA STATION PLUS WILL BE USED.

NO	DATE	CLASS REV	ADC	DESCRIPTION	DWN	DES	CHKD	SUB	APP

AECOM

RLWTF-UP LOW LEVEL WASTE SUBPROJECT

CONTROL SYSTEM BLOCK DIAGRAM

DRAWN	V DAVISON
DESIGN	B MOORE
CHECKED	G MOE
DATE	5/8/14

BLDG. 230 TA-50

SUBMITTED: MANNY TARIN

APPROVED FOR RELEASE: ED ARTIGLIA

Los Alamos NATIONAL LABORATORY PO Box 1663 Los Alamos, New Mexico 87545

SHEET E-6140

374 OF 434

CLASSIFICATION | REVIEWER | DATE

PROJECT ID	DRAWING NO	REV
100761	C55864	0

EUGENE DAVID MOE NEW MEXICO 21389 PROFESSIONAL ENGINEER 05/07/2014

File Location: P:\RLWTF LOW-LEVEL WASTE FACILITY\500 CAD\C55864 MAIN BUILDING\SHEETS\16 ELECTRICAL\C55864-E-6140-R0.DWG
Plotted by: MOORE, STEPHEN Plot Date: Monday, May 05, 2014

SHEET: 1 2425

RLWTF I&C INTERLOCKS				
SOFTWARE PROCESS INTERLOCK	SOURCE	SOURCE DRAWING NO.	ACTION	ACTION DRAWING NO.
I-1	LAHH-1123	D-6012	CLOSES AOBV-1115, AOBV-5822 & STOPS P-4003	D-6012
			CLOSES AOBV-1324	D-6018
			CLOSES AOBV-1708	D-6023
			CLOSES AOBV-1157	D-6030
			STOPS P-1703	D-6027
			CLOSES VALVES AOBV-1103, STOPS PUMPS P-01, P-02 AT TA-50-250	D-6010
			STOPS PS-5700	P-6010
I-2	LAHH-1125	D-6013	CLOSES AOBV-1126	D-6012
			STOPS P-1701	D-6012
			CLOSES AOBV-5623	D-6013
I-3	LAHH-1302	D-6016	CLOSES AOBV-1304 & STOPS P-4006, P-4007	D-6016
			CLOSES AOBV-1214	D-6014
I-4	LAHH-1344	D-6020	CLOSES AOBV-1340, STOPS P-4010, P-4011	D-6020
			CLOSES AOBV-1331	D-6018
I-5	LAHH-1722	D-6028	CLOSES AOBV-1737, AOBV-5826	D-6028
			CLOSES AOBV-1323	D-6018
I-6	LAL-1723	D-6027	STOPS P-1703	D-6027
I-7	LAL-1722	D-6028	STOPS P-1705	D-6028
I-8	LALL-1700	D-6030	STOPS P-1706	D-6030
I-9	LAH-4302	D-6019	CLOSES AOBV-5624	D-6019
I-10	LAH-1710	D-6023	STOPS P-1702	D-6025
I-11	LAH-1716	D-6025	CLOSES AOBV-1706	D-6024
I-12	LAHH-1700	D-6030	STOPS EVAP-1701, EVAP-1702	D-6029

LLW PROCESS CONTROL LOGIC

NO	DATE	CLASS REV	ADC	DESCRIPTION	DWN	DES	CHKD	SUB	APP

AECOM

RLWTF-UP LOW LEVEL WASTE SUBPROJECT

LLW PROCESS CONTROL LOGIC DIAGRAM

BLDG. 230 TA-50

DRAWN	V DAVISON
DESIGN	S MOORE
CHECKED	G MOE
DATE	5/8/14

SUBMITTED MANNY TARIN

APPROVED FOR RELEASE ED ARTIGLIA

Los Alamos NATIONAL LABORATORY PO Box 1663 Los Alamos, New Mexico 87545

SHEET E-6141

375 OF 434

CLASSIFICATION REVIEWER DATE

PROJECT ID 100761

DRAWING NO C55864

REV 0

EUGENE DAVID MOE NEW MEXICO 21368 PROFESSIONAL ENGINEER 5/8/14

94426

File: Location: P:\RLWTF LOW-LEVEL WASTE FACILITY\500 CAD\C55864 MAIN BUILDING\SHEETS\18 ELECTRICAL\55864-E-6141-R0.DWG
Plotted By: MOORE, STEPHEN, Plot Date: Monday, May 05, 2014

CAB-100: NETWORK 1, NODE 3

SLOT 0	SLOT 1	SLOT 2	SLOT 3		SLOT 4		SLOT 5		SLOT 6	
1756-L55 CONTROLLOGIX 5555 CCONTROLLER	1756-ENBT ETHERNET BRIDGE	1756-ENBT ETHERNET BRIDGE	DI_3_3 1756-IB16I 16 PT 10V-30V DC ISOLATED INPUT, SINK/SOURCE		DO_3_4 1756-OB16I 16 PT 10V-30V DC ISOLATED OUTPUT, SINK/SOURCE		AI_3_5 1756-IF16 16 CANNEL NON-ISOLATED VOLTAGE/CURRENT ANALOG IN		DI_3_6 1756-IB16I 16 PT 10V-30V DC ISOLATED INPUT, SINK/SOURCE	
			0	PSL-5942	0		0	PT-5946	0	LSHH-5001
			1	PSL-5954	1		1	PT-5951	1	
			2	PSL-5952	2		2	PT-5953	2	
			3	LSH-5704	3		3	PIT-5003	3	
			4	LSH-5705	4		4	PIT-5004	4	
			5	LSH-5710	5		5		5	
			6	YS-5001	6		6		6	
			7	PSL-5001	7		7		7	
			8	YS-5002	8		8		8	
			9	PSL-5002	9		9		9	
			10	LSH-5703	10		10		10	
			11		11		11		11	
			12		12		12		12	
			13		13		13		13	
			14		14		14		14	
			15		15		15		15	

NO	DATE	CLASS REV	ADC	DESCRIPTION	DWN	DES	CHKD	SUB	APP

AECOM

RLWTF-UP LOW LEVEL WASTE SUBPROJECT

CAB-100 NODE 3 I/O MODULE DISTRIBUTION

BLDG. 230 TA-50

DRAWN	V DAVISON
DESIGN	S MOORE
CHECKED	G MOE
DATE	5/8/14

SUBMITTED MANNY TARIN

APPROVED FOR RELEASE ED ARTIOLIA

Los Alamos NATIONAL LABORATORY PO Box 1663 Los Alamos, New Mexico 87545

SHEET E-6149

376 OF 434

CLASSIFICATION REVIEWER DATE

PROJECT ID 100761

DRAWING NO C55864

REV 0

EUGENE DAVID MOE NEW MEXICO 21369 PROFESSIONAL ENGINEER

File Location: P:\RLWTF LOW-LEVEL WASTE FACILITY\500 CAD\C55864 MAIN BUILDING\SHEETS\18 ELECTRICAL\55864-E-6149-R0.DWG
Plotted By: MOORE, STEVEN Plot Date: Monday, May 05, 2014

12427

CAB-101: NETWORK 1, NODE 1

SLOT 0	SLOT 1	SLOT 2	SLOT 3	SLOT 4	SLOT 5	SLOT 6	SLOT 7
1756-ENBT ETHERNET BRIDGE	DI_1_3 1756-IB16I 16 PT 10V-30V DC ISOLATED INPUT, SINK/SOURCE	DI_1_3 1756-IB16I 16 PT 10V-30V DC ISOLATED INPUT, SINK/SOURCE	DI_1_3 1756-IB16I 16 PT 10V-30V DC ISOLATED INPUT, SINK/SOURCE	DI_1_4 1756-IB16I 16 PT 10V-30V DC ISOLATED INPUT, SINK/SOURCE	DO_1_5 1756-OB16I 16 PT 10V-30V DC ISOLATED OUTPUT, SINK/SOURCE	DO_1_6 1756-OB16I 16 PT 10V-30V DC ISOLATED OUTPUT, SINK/SOURCE	RO_1_7 1756-OW16I 16 PT 10V-265V AC 5-150 V DC ISOLATED RELAY
	0 ZSO-1103	0	0 ZSO-1708	0	0 AOBV-1103	0 AOBV-1708	0 XC-1101
	1 ZSC-1103	1	1 ZSC-1708	1	1 AOBV-1107	1	1 HS-1701
	2 ZSO-1107	2	2	2	2 XS-5703	2	2
	3 ZSC-1107	3	3	3	3 AOBV-1115	3 AOBV-1706	3
	4	4 ZSO-5627	4	4	4 AOBV-1122	4	4 XC-1703
	5	5 ZSC-5627	5	5	5 AOBV-1126	5	5 XC-1704
	6 ZSO-1115	6 ZSO-5623	6 ZSO-1706	6	6 AOBV-5622	6 AOBV-1717	6
	7 ZSC-1115	7 ZSC-5623	7 ZSC-1706	7	7	7 AOBV-5625	7 HS-1702
	8 ZSO-1122	8 ZSO-1124	8 LSH-5701	8	8	8	8
	9 ZSC-1122	9 ZSC-1124	9	9	9	9	9
	10 ZSO-1126	10	10	10	10 AOBV-5627	10	10
	11 ZSC-1126	11	11	11	11 AOBV-5623	11	11
	12 ZSO-5622	12	12 ZSO-1717	12	12 AOBV-1124	12	12
	13 ZSC-5622	13	13 ZSC-1717	13	13	13	13
	14 YS-1101	14	14 ZSO-5625	14	14	14	14
	15 FLS-4003	15	15 ZSC-5625	15	15	15	15

SLOT 8	SLOT 9	SLOT 10	SLOT 11	SLOT 12
AI_1_8 1756-IF16 16 CHANNEL NON-ISOLATED VOLTAGE/CURRENT ANALOG IN	AI_1_9 1756-IF16 16 CHANNEL NON-ISOLATED VOLTAGE/CURRENT ANALOG IN	AO_1_10 1756-OF8 8 CHANNEL NON-ISOLATED VOLTAGE/CURRENT ANALOG OUT	RTD_1_11 1756-IR6I 6 CHANNEL ISOLATED RTD ANALOG INPUT	AI_1_12 1756-IF16 16 CHANNEL NON-ISOLATED VOLTAGE/CURRENT ANALOG IN
0 FIT-1102	0 PIT-1218	0 LY-1124	0	0 FIT-1708
1 PIT-1104	1 LIT-4200	1	1	1 FIT-1719
2 PIT-1106	2 LIT-4201	2 SC-4003	2	2
3 WIT-1701	3 FIT-1707	3 FY-1206	3	3
4 FIT-4001	4 LIT-1710	4	4	4
5 FIT-4002	5 PIT-1704	5	5	5
6 AIT-1100	6 FIT-1705	6 FY-1707		6
7 LIT-1123	7	7 FY-1719		7
8 AIT-1125	8 WIT-1730			8
9 PIT-1703	9 FIT-1711			9
10 SIC-4003	10 PIT-1712			10
11	11 PIT-1715			11
12	12 LIT-1716			12
13	13 PIT-1720			13
14 LIT-1124	14 FIT-1721			14
15 PIT-1211	15 LIT-1723			15

NO	DATE	CLASS REV	ADC	DESCRIPTION	DWN	DES	CHKD	SUB	APP

AECOM

RLWTF-UP LOW LEVEL WASTE SUBPROJECT

CAB-101 NODE 1 I/O MODULE DISTRIBUTION

DRAWN V DAVISON
DESIGN S MOORE
CHECKED G MOE
DATE 5/8/14

BLDG. 230 TA-50

SUBMITTED MANNY TAPIA

APPROVED FOR RELEASE ED ARTIGLIA

Los Alamos NATIONAL LABORATORY PO Box 1663 Los Alamos, New Mexico 87545

SHEET E-6150
377 OF 434

CLASSIFICATION REVIEWER DATE

PROJECT ID 100761 DRAWING NO C55864 REV 0

EUGENE DAVIS MOE NEW MEXICO 21389 PROFESSIONAL ENGINEER

File: Location: P:\RLWTF LOW-LEVEL WASTE FACILITY\300 DAV\C55864 MAIN BUILDING\SHEETS\10 ELECTRICAL\55864-E-6150-R0.DWG
Plotted By: MOE, STEVEN Plot Date: Monday, May 05, 2014

82128

CAB-102: NETWORK 1, NODE 5

SLOT 0	SLOT 1	SLOT 2	SLOT 3	SLOT 4	SLOT 5	SLOT 6	SLOT 7	SLOT 8	SLOT 9
1756-ENBT ETHERNET BRIDGE	DI_5_1 1756-IB16I 16 PT 10V-30V DC ISOLATED INPUT, SINK/SOURCE	DI_5_2 1756-IB16I 16 PT 10V-30V DC ISOLATED INPUT, SINK/SOURCE	DI_5_3 1756-IB16I 16 PT 10V-30V DC ISOLATED INPUT, SINK/SOURCE	DI_5_4 1756-IB16I 16 PT 10V-30V DC ISOLATED INPUT, SINK/SOURCE	DO_5_5 1756-OB16I 16 PT 10V-30V DC ISOLATED OUTPUT, SINK/SOURCE	DO_5_6 1756-OB16I 16 PT 10V-30V DC ISOLATED OUTPUT, SINK/SOURCE	AI_5_7 1756-IF16 16 CHANNEL NON-ISOLATED VOLTAGE/CURRENT ANALOG IN	AI_5_8 1756-IF16 16 CHANNEL NON-ISOLATED VOLTAGE/CURRENT ANALOG IN	AI_5_9 1756-IF16 16 CHANNEL NON-ISOLATED VOLTAGE/CURRENT ANALOG IN
	0 ZSO-1304	0 ZSO-1329	0	0	0 AOBV-1304	0	0 CIT-1301	0 FIT-1352	0 PIT-1402
	1 ZSC-1304	1 ZSC-1329	1	1	1 AOBV-5624	1 AOBV-1340	1 LIT-1302	1 LIT-1722	1 FIT-1403
	2 ZSO-5624	2 ZSO-1331	2 ZSO-1340	2	2	2	2 AIT-1301	2 PIT-1725	2 FIT-1405
	3 ZSC-5624	3 ZSC-1331	3 ZSC-1340	3	3	3 AOBV-1342	3 AIT-1302	3	3 PIT-1410
	4 YS-1301	4 ZSO-1355	4	4	4	4	4 SIC-4006	4 WIT-1702	4 PIT-1411
	5	5 ZSC-1355	5	5	5 AOBV-1320	5	5 SIC-4007	5 LIT-1700	5 PIT-1422
	6 FSL-4006	6 ZSO-1737	6 ZSO-1342	6	6 AOBV-1323	6	6 PIT-1309	6 PIT-1732	6 PIT-1423
	7 FSL-4007	7 ZSC-1737	7 ZSC-1342	7	7 AOBV-1324	7	7 PIT-1313	7 AIT-1345	7 PIT-1437
	8 ZSO-1320	8 ZSO-5626	8	8	8 AOBV-1157	8	8 FIT-1315	8 CIT-1343	8 PIT-1445
	9 ZSC-1320	9 ZSC-5626	9	9	9 AOBV-1329	9	9 PIT-1316	9 PIT-1337	9 PIT-1406
	10 ZSO-1323	10 ZSO-1728	10 FSL-4010	10	10 AOBV-1331	10	10 FIT-1311	10 LIT-1344	10
	11 ZSC-1323	11 ZSC-1728	11 FSL-4011	11	11 AOBV-1355	11	11	11 SIC-4010	11
	12 ZSO-1324	12	12	12	12 AOBV-1737	12	12	12 SIC-4011	12
	13 ZSC-1324	13	13	13	13 AOBV-5626	13	13	13 FIT-1700	13
	14	14 ZSO-1157	14	14	14 AOBV-1728	14	14	14 FIT-1701	14
	15	15 ZSC-1157	15	15	15	15	15	15 AIT-1346	15

SLOT 10	SLOT 11	SLOT 12	SLOT 13	SLOT 14	SLOT 15	SLOT 16
RO_5_10 1756-OW16I 16 PT 10V-265V AC 5-150 V DC ISOLATED RELAY	AO_5_11 1756-OF8 8 CHANNEL NON-ISOLATED VOLTAGE/CURRENT ANALOG OUT	RTD_5_12 1756-IR6I 6 CHANNEL ISOLATED RTD ANALOG INPUT	RTD_5_13 1756-IR6I 6 CHANNEL ISOLATED RTD ANALOG INPUT	AO_5_14 1756-OF8 8 CHANNEL NON-ISOLATED VOLTAGE/CURRENT ANALOG OUT	EMPTY	EMPTY
0	0 SC-4006	0 TE-1303	0 TE-1740	0 FY-1403		
1 XC-1301	1 SC-4007	1	1 TE-1741	1 FY-1700		
2	2 SC-4010	2	2 TE-1742	2 FY-1701		
3	3 SC-4011	3	3 TE-1743	3		
4 XC-1705	4 FC-1315	4	4 TE-1744	4		
5	5 FY-1311	5	5 TE-1745	5		
6	6 FY-1315			6		
7	7			7		
8						
9						
10						
11						
12						
13						
14						
15						

NO	DATE	CLASS REV	ADC	DESCRIPTION	DWN	DES	CHKD	SUB	APP

AECOM

RLWTF-UP LOW LEVEL WASTE SUBPROJECT

CAB-102 NODE 5 I/O MODULE DISTRIBUTION

BLDG. 230 TA-50

DRAWN	V DAVISON
DESIGN	S MOORE
CHECKED	G MOE
DATE	5/8/14

SUBMITTED MANNY TARIN

APPROVED FOR RELEASE ED ARTIGLIA

Los Alamos NATIONAL LABORATORY PO Box 1663 Los Alamos, New Mexico 87545

SHEET E-6151

378 OF 434

CLASSIFICATION | REVIEWER | DATE

PROJECT ID 100761 | DRAWING NO C55864 | REV 0

EUGENE DAVID MOE NEW MEXICO 21369 PROFESSIONAL ENGINEER 05/14/2014

File Location: P:\RLWTF LOW-LEVEL WASTE FACILITY\300 CAD\C55864 MAIN BUILDING\SHEETS\10 ELECTRICAL\C55864-E-6151-R0.DWG
Plotted By: MOORE, STEPHEN Plot Date: Monday, May 05, 2014

92h21 : 12129

DRAFT

File Location: P:\RLWTF LOW-LEVEL WASTE FACILITY\300 CAD\C55864 MAIN BUILDING\SHEETS\18 ELECTRICAL\55864-E-6155-R0.DWG
Plotted By: MOORE, STEPHEN Plot Date: Monday, May 05, 2014

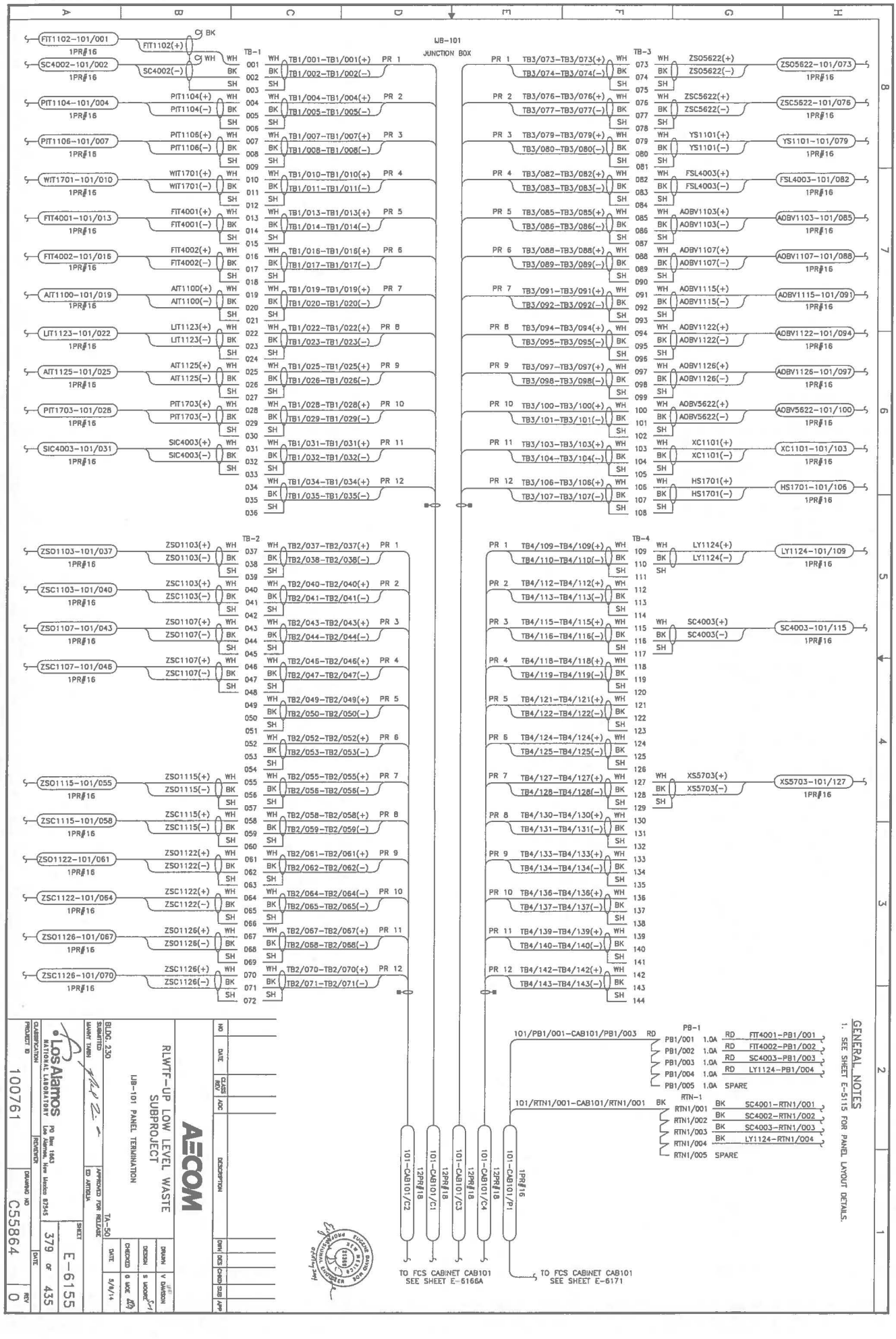

File Location: P:\RLWTF LOW-LEVEL WASTE FACILITY\500 CAD\C55864 MAIN BUILDING\SHEETS\16 ELECTRICAL\55864-E-6156-RD.DWG
Plotted By: MOORE, STEPHEN Plot Date: Monday, May 05, 2014

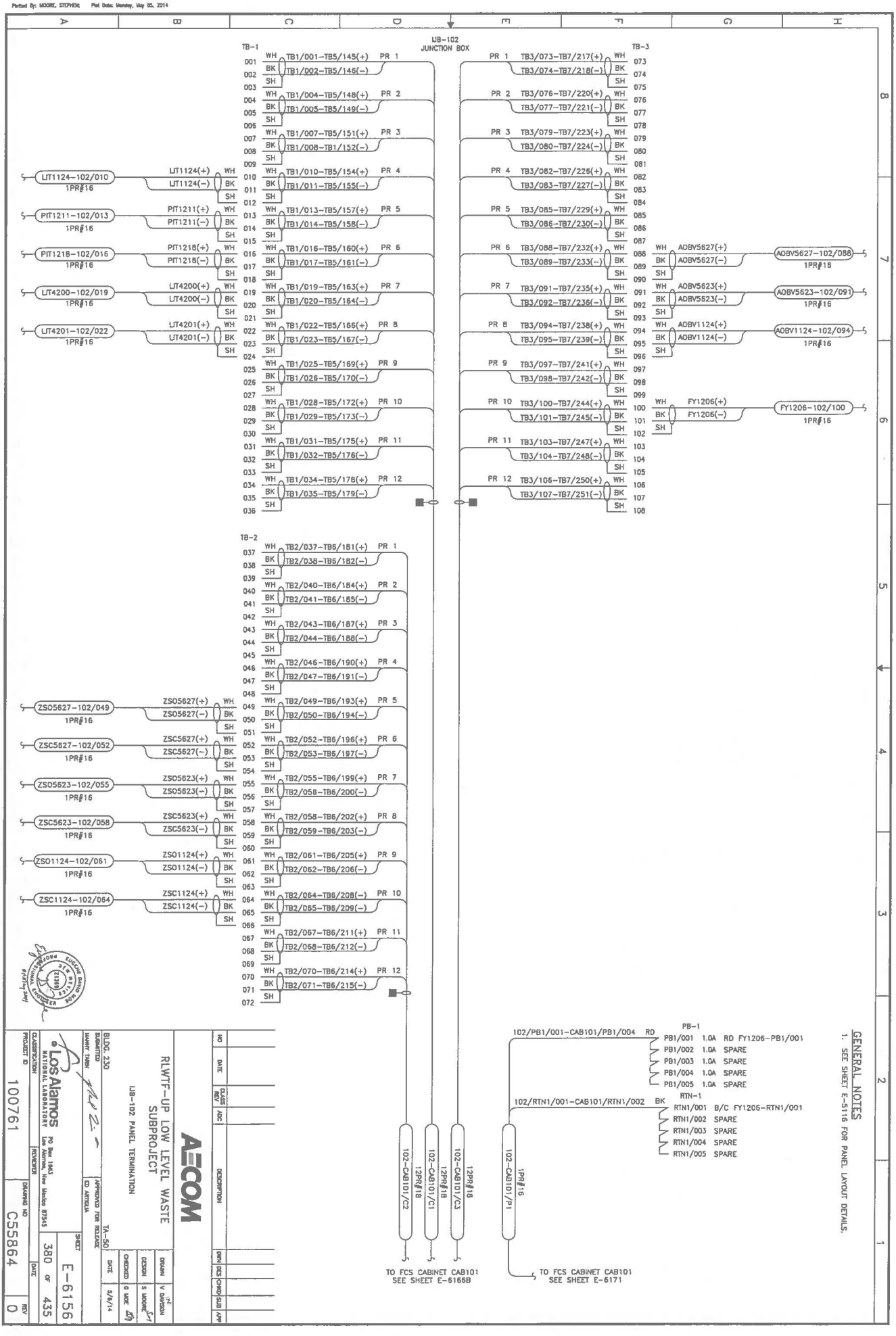

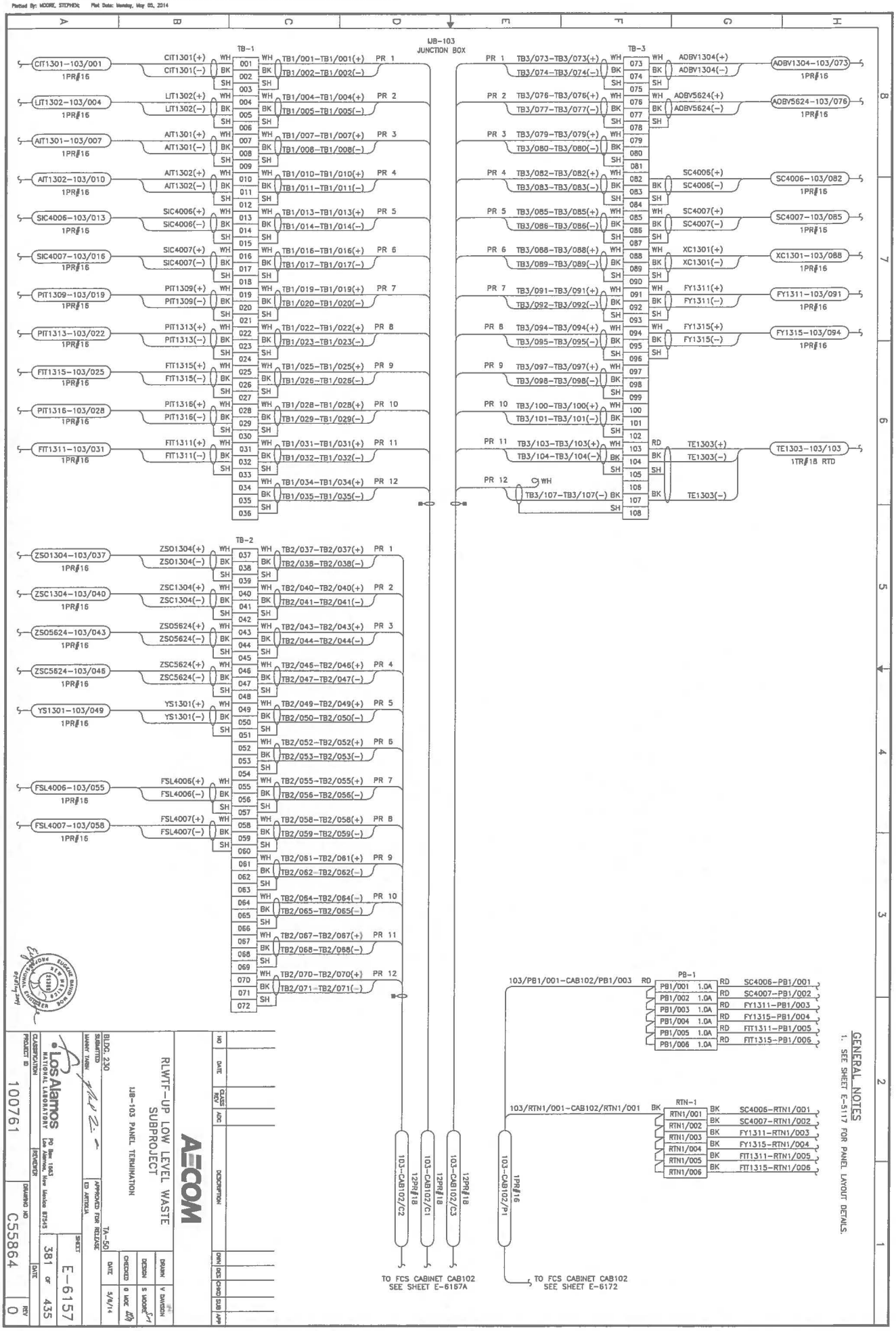

File Location: P:\RLWTF LOW-LEVEL WASTE FACILITY\500 CAD\C55864 MAIN BUILDING\SHEETS\18 ELECTRICAL\55864-E-6157-RD.DWG
Plotted By: MOORE, STEPHEN Plot Date: Monday, May 05, 2014
UJB-103 JUNCTION BOX
TB-1
TB-2
TB-3
PB-1
RTN-1
103-CAB102/C2
103-CAB102/C1
103-CAB102/C3
103-CAB102/P1
TO FCS CABINET CAB102 SEE SHEET E-6167A
TO FCS CABINET CAB102 SEE SHEET E-6172
GENERAL NOTES
1. SEE SHEET E-5117 FOR PANEL LAYOUT DETAILS.
AECOM
RLWTF-UP LOW LEVEL WASTE SUBPROJECT
UJB-103 PANEL TERMINATION
BLDG. 230
TA-50
SUBMITTED
MANNY TABIN
APPROVED FOR RELEASE
ED ARTIGUA
Los Alamos NATIONAL LABORATORY
PO Box 1663 Los Alamos, New Mexico 87545
PROJECT ID 100761
DRAWING NO C55864
SHEET E-6157
381 OF 435
REV 0
DRAWN V DAVISON
DESIGN S MOORE
CHECKED G MOE
DATE 5/8/14

File Location: P:\RLWTF LOW-LEVEL WASTE FACILITY\500 CAD\C55864 MAIN BUILDING\SHEETS\18 ELECTRICAL\55864-E-6158-R0.DWG
Plotted By: MOORE, STEPHEN; Plot Date: Monday, May 05, 2014

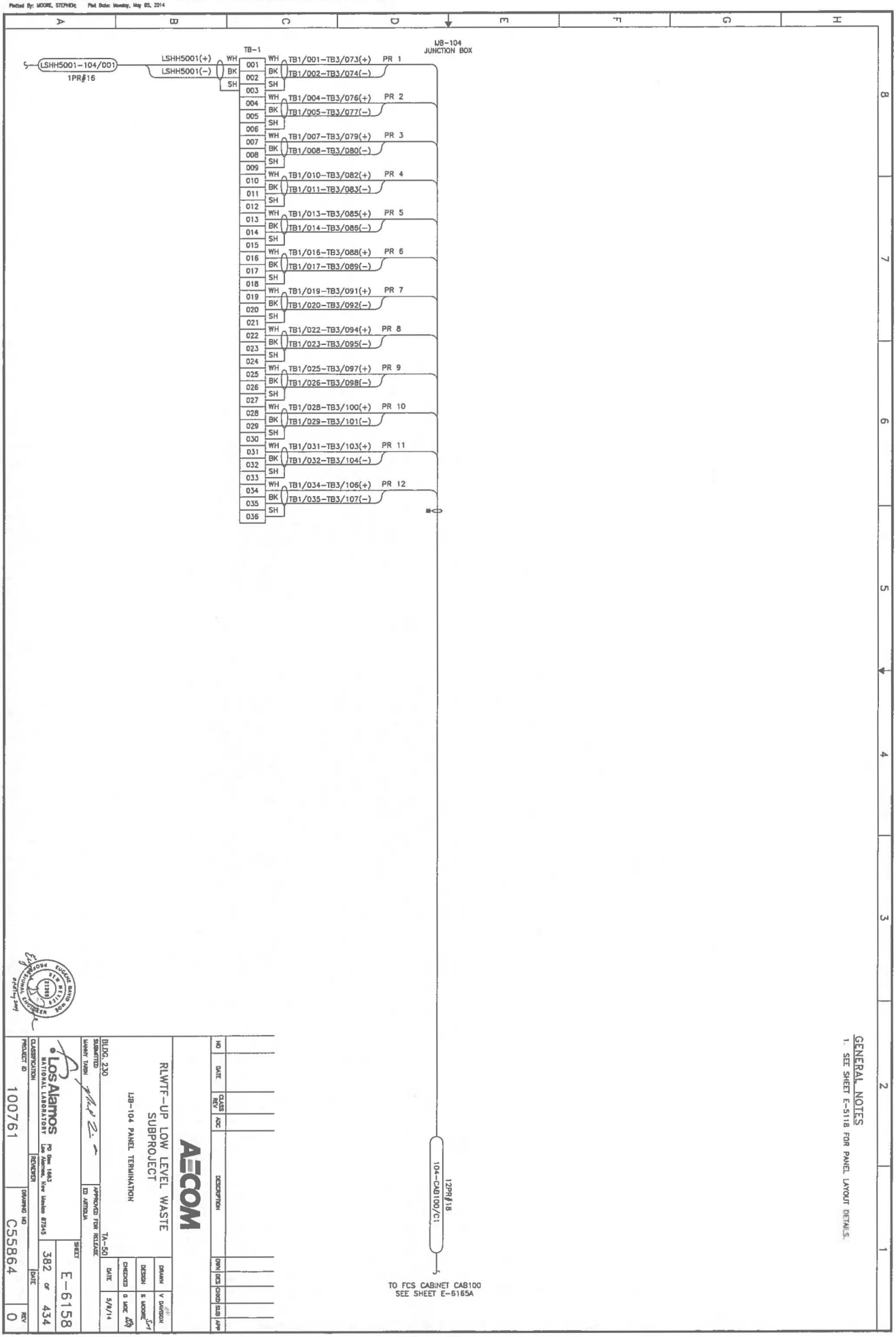

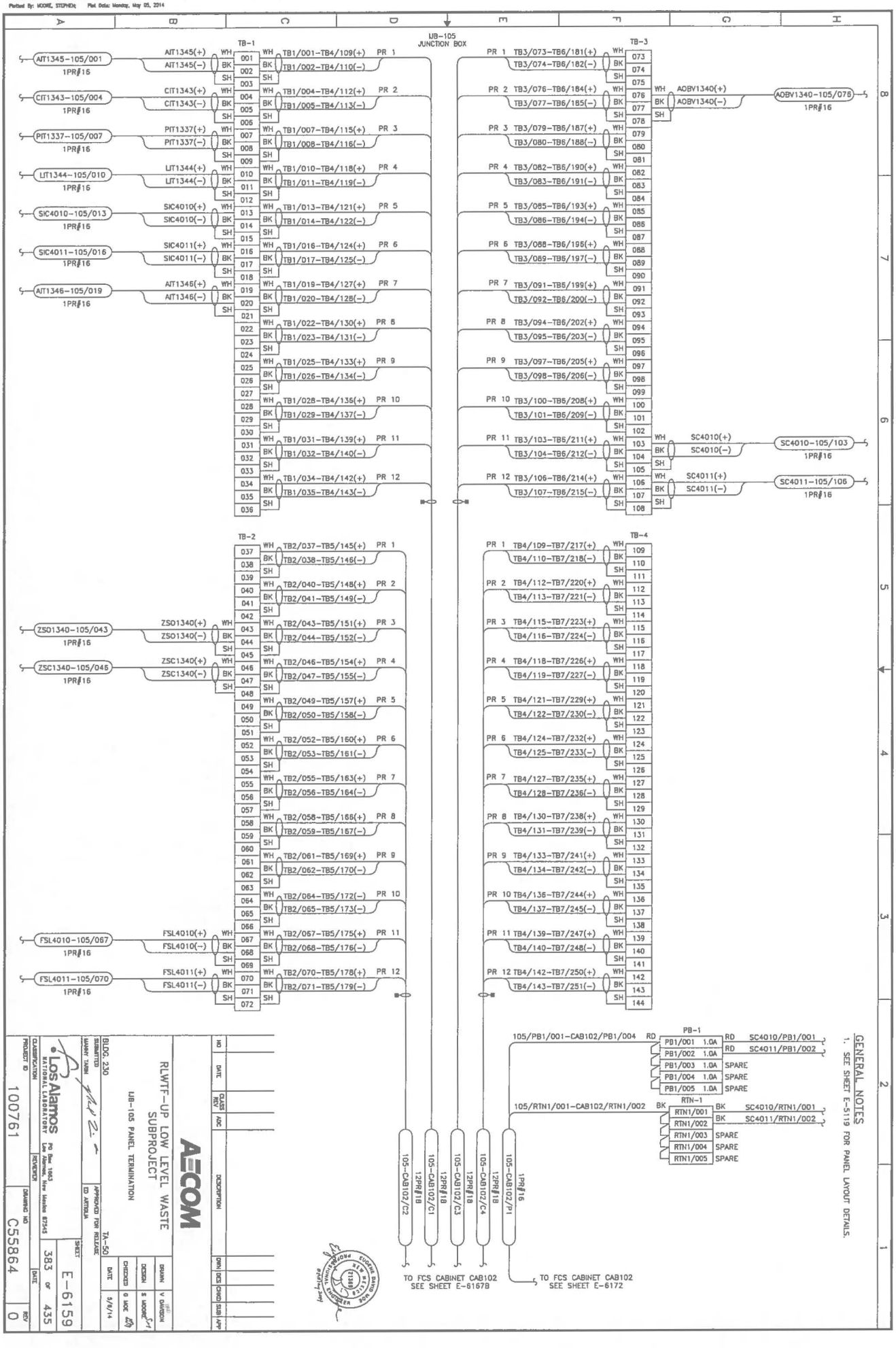

File Location: P:\RLWTF LOW-LEVEL WASTE FACILITY\500 CAD\C55864 MAIN BUILDING\SHEETS\16 ELECTRICAL\55864-E-6159-RD.DWG
Plotted By: MOORE, STEPHEN Plot Date: Monday, May 05, 2014
UB-105 JUNCTION BOX
TB-1
TB-2
TB-3
TB-4
AIT1345-105/001
CIT1343-105/004
PIT1337-105/007
LIT1344-105/010
SIC4010-105/013
SIC4011-105/016
AIT1346-105/019
ZSO1340-105/043
ZSC1340-105/046
FSL4010-105/067
FSL4011-105/070
AOBV1340-105/076
SC4010-105/103
SC4011-105/106
PB-1
RTN-1
105/PB1/001-CAB102/PB1/004
105/RTN1/001-CAB102/RTN1/002
105-CAB102/C2
105-CAB102/C1
105-CAB102/C3
105-CAB102/C4
105-CAB102/P1
TO FCS CABINET CAB102 SEE SHEET E-6167B
TO FCS CABINET CAB102 SEE SHEET E-6172
GENERAL NOTES
1. SEE SHEET E-5119 FOR PANEL LAYOUT DETAILS.
AECOM
RLWTF-UP LOW LEVEL WASTE SUBPROJECT
UB-105 PANEL TERMINATION
BLDG. 230
TA-50
Los Alamos NATIONAL LABORATORY
PROJECT ID 100761
DRAWING NO C55864
SHEET E-6159
383 OF 435
REV 0

SEN21 :

File Location: P:\RLWTF LOW-LEVEL WASTE FACILITY\500 CAD\C55864 MAIN BUILDING\SHEETS\16 ELECTRICAL\55864-E-6160-RG.DWG
Plotted By: MOORE, STEPHEN Plot Date: Monday, May 05, 2014

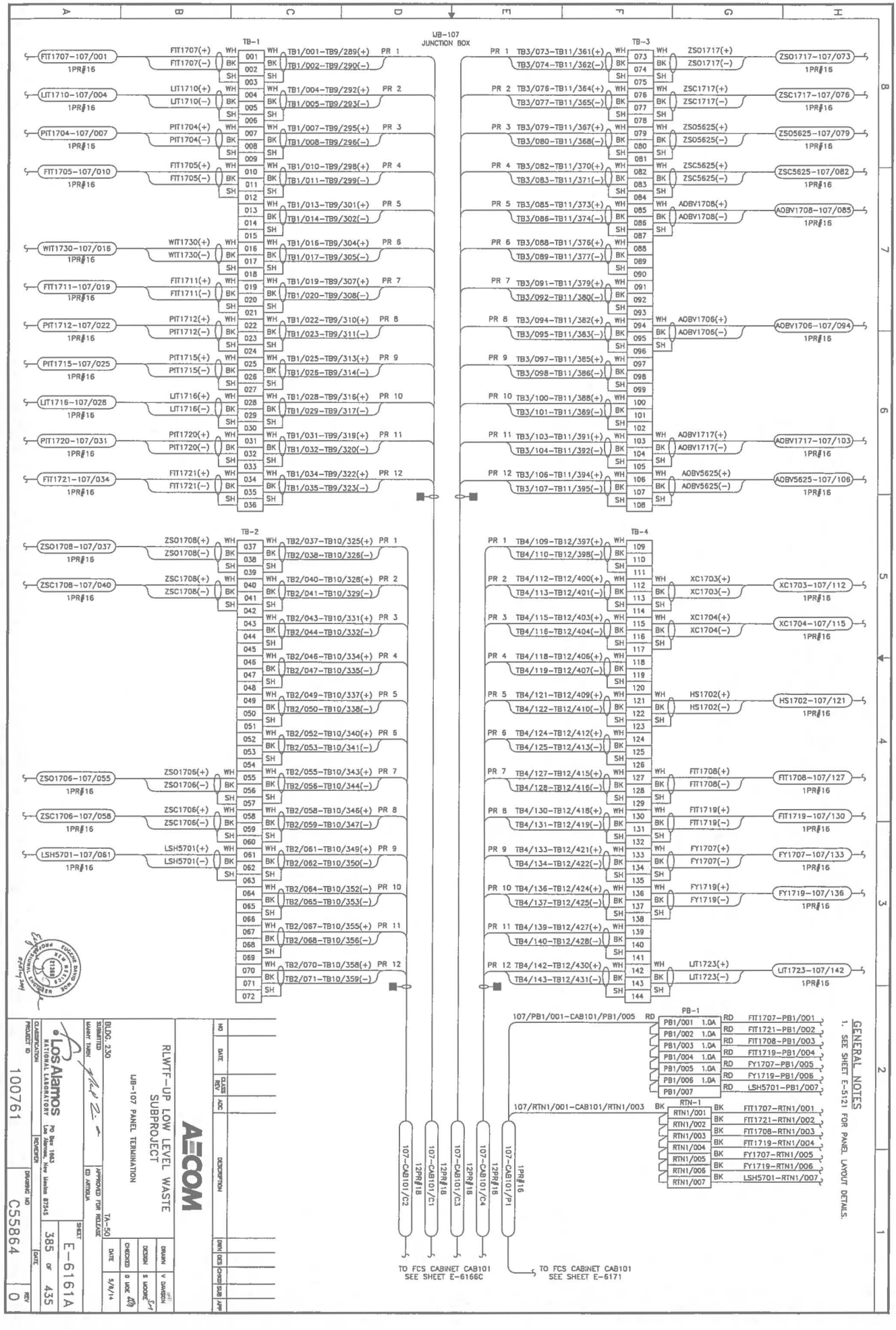

File Location: P:\RLWTF LOW-LEVEL WASTE FACILITY\500 CAD\C55864 MAIN BUILDING\SHEETS\16 ELECTRICAL\55864-E-6161A-R0.DWG
Plotted By: MOORE, STEPHEN Plot Date: Monday, May 05, 2014
UB-107 JUNCTION BOX
TB-1
TB-2
TB-3
TB-4
PB-1
RTN-1
107-CAB101/C2
107-CAB101/C1
107-CAB101/C3
107-CAB101/C4
107-CAB101/P1
TO FCS CABINET CAB101 SEE SHEET E-6166C
TO FCS CABINET CAB101 SEE SHEET E-6171
GENERAL NOTES
1. SEE SHEET E-5121 FOR PANEL LAYOUT DETAILS.
AECOM
RLWTF-UP LOW LEVEL WASTE SUBPROJECT
UB-107 PANEL TERMINATION
BLDG. 230
TA-50
Los Alamos NATIONAL LABORATORY
PROJECT ID 100761
DRAWING NO C55864
SHEET E-6161A
385 OF 435
REV 0

File Location: P:\RLWTF LOW-LEVEL WASTE FACILITY\500 CAD\C55864 MAIN BUILDING\SHEETS\18 ELECTRICAL\55864-E-6161B-RD.DWG
Plotted By: MOORE, STEPHEN Plot Date: Monday, May 05, 2014

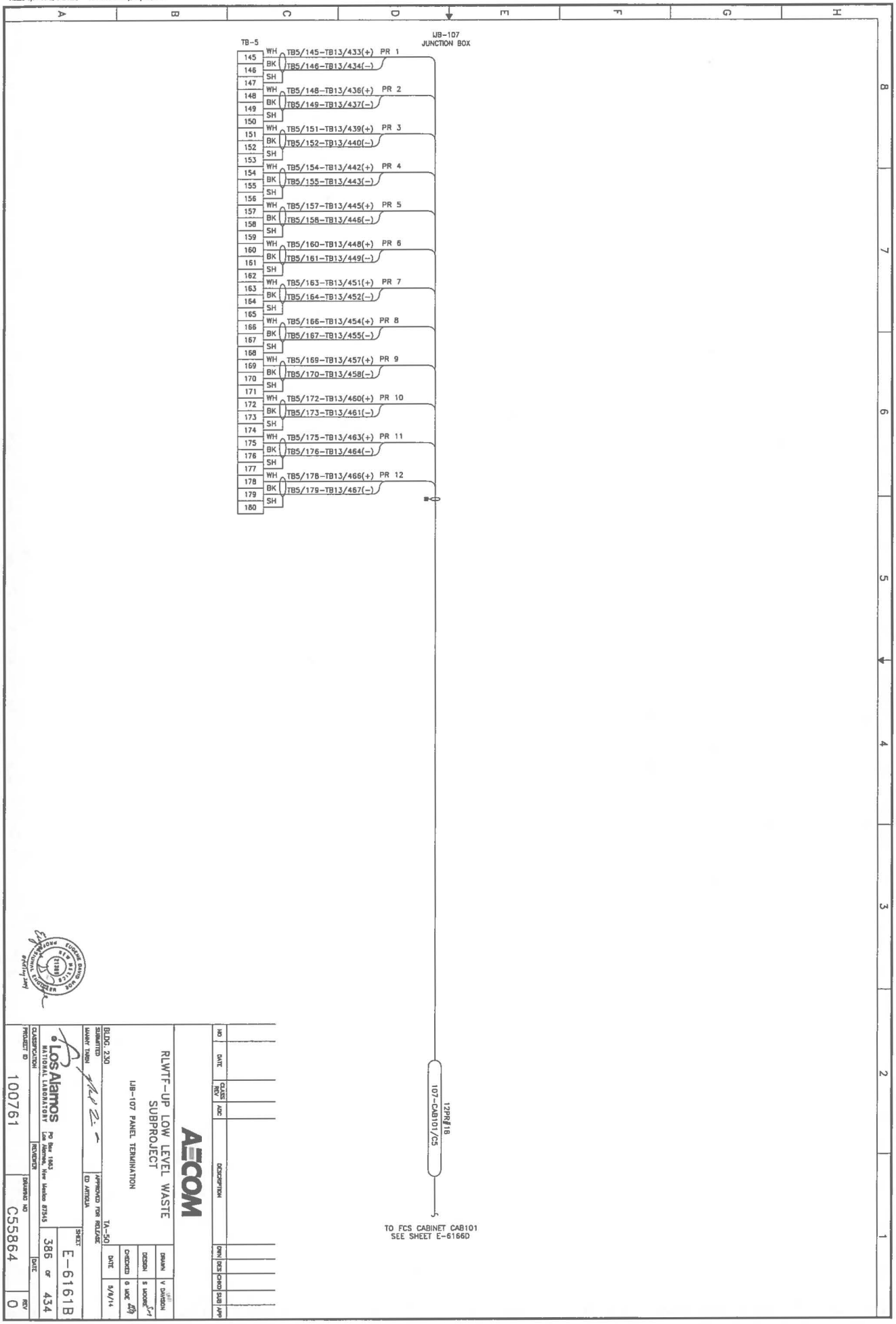

File Location: P:\RLWTF LOW-LEVEL WASTE FACILITY\500 CAD\C55864 MAIN BUILDING\SHEETS\18 ELECTRICAL\55864-E-6165A-RD.DWG
Plotted By: MOORE, STEPHEN; Plot Date: Monday, May 05, 2014

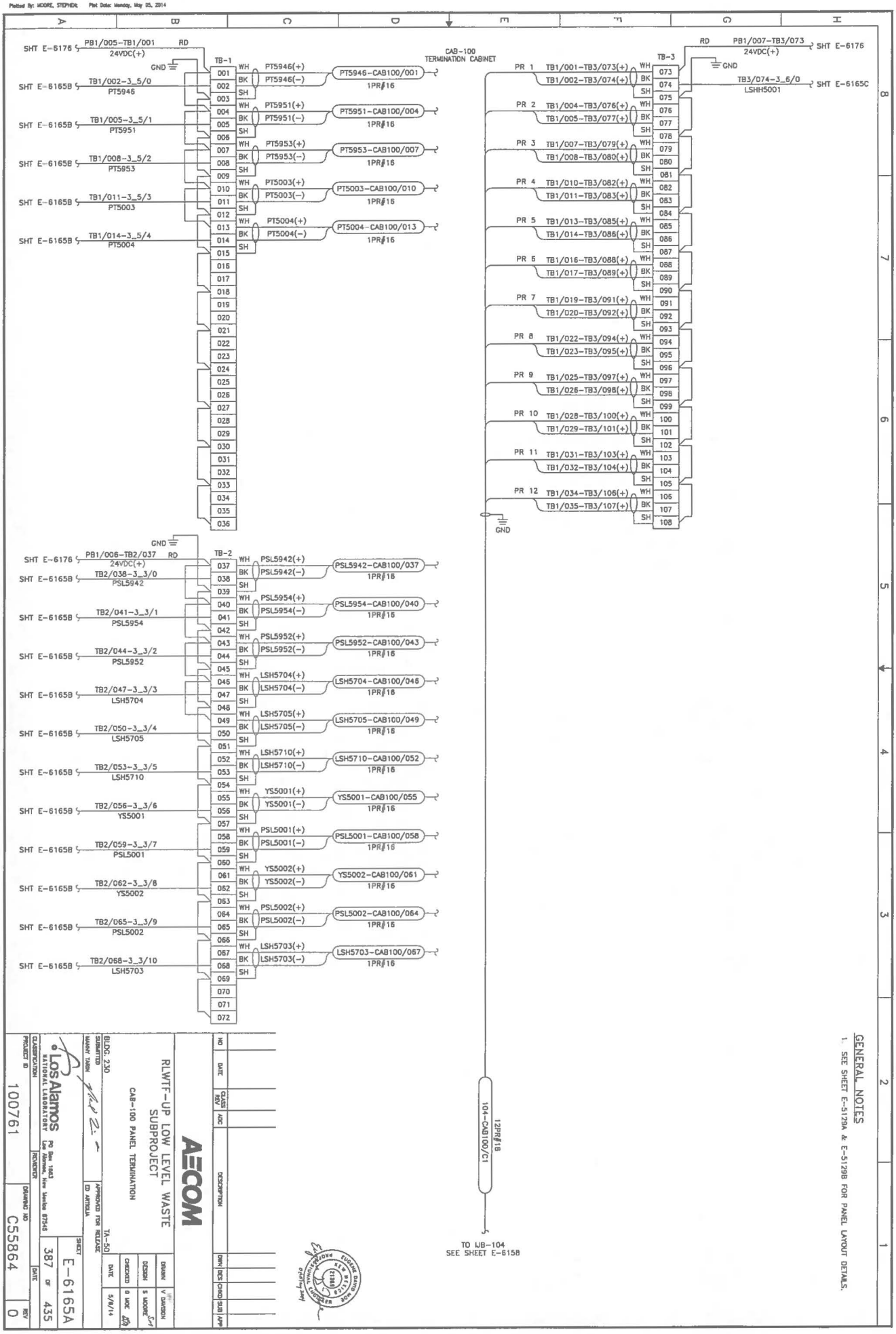

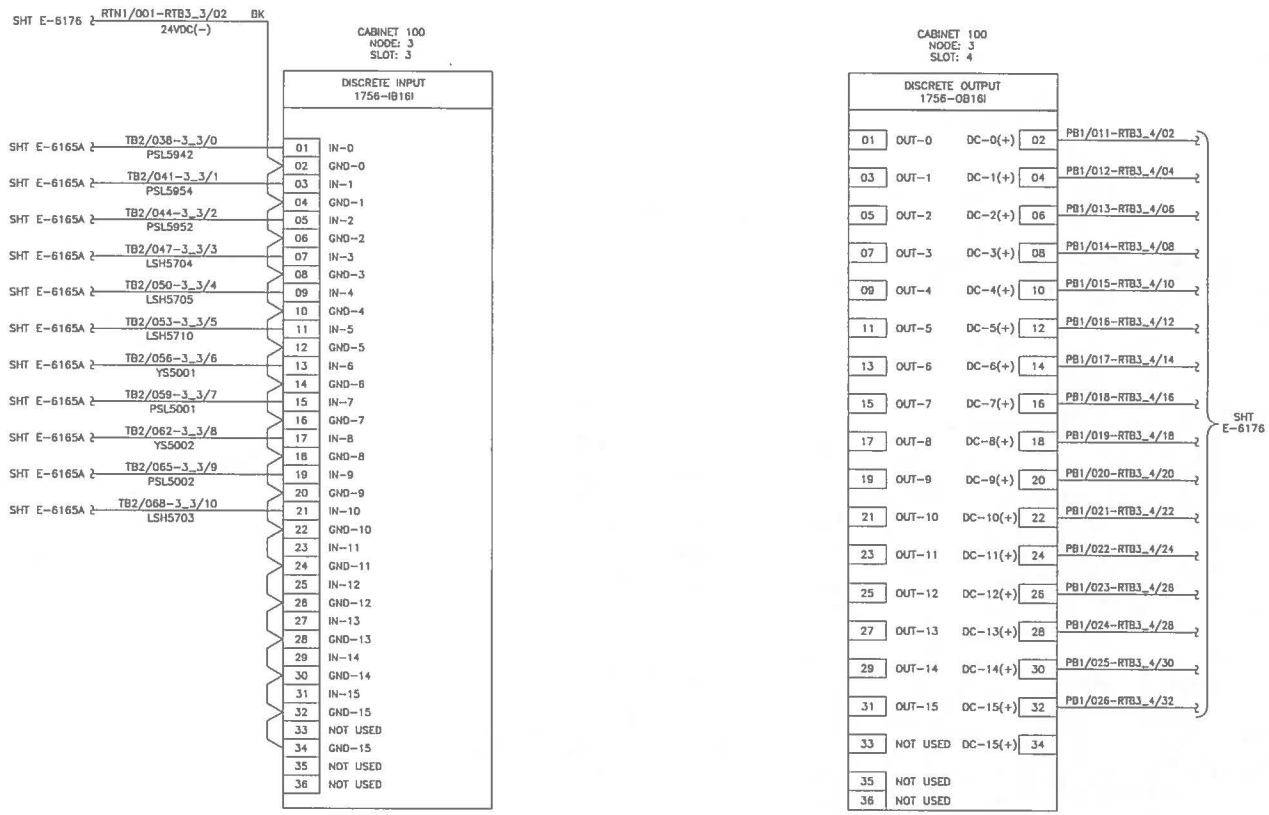

NO	DATE	CLASS REV	ADC	DESCRIPTION	DWN	DES	CHKD	SUB	APP

AECOM

RLWTF-UP LOW LEVEL WASTE SUBPROJECT

CAB-100 PANEL TERMINATION

BLDG. 230 TA-50

DRAWN	V DAVISON
DESIGN	S MOORE
CHECKED	G MOE
DATE	5/8/14

SUBMITTED MANNY TARIN

APPROVED FOR RELEASE ED ARTIGLIA

Los Alamos NATIONAL LABORATORY PO Box 1663 Los Alamos, New Mexico 87545

SHEET E-6165B

388 OF 434

CLASSIFICATION | REVIEWER | DATE

PROJECT ID 100761 | DRAWING NO C55864 | REV 0

EUGENE DAVID MOE NEW MEXICO 21380 PROFESSIONAL ENGINEER

File Location: P:\RLWTF LOW-LEVEL WASTE FACILITY\500 CAD\C55864 MAIN BUILDING\SHEETS\18 ELECTRICAL\55864-E-6165B-R0.DWG
Plotted By: MOORE, STEVEN; Plot Date: Monday, May 05, 2014

12439

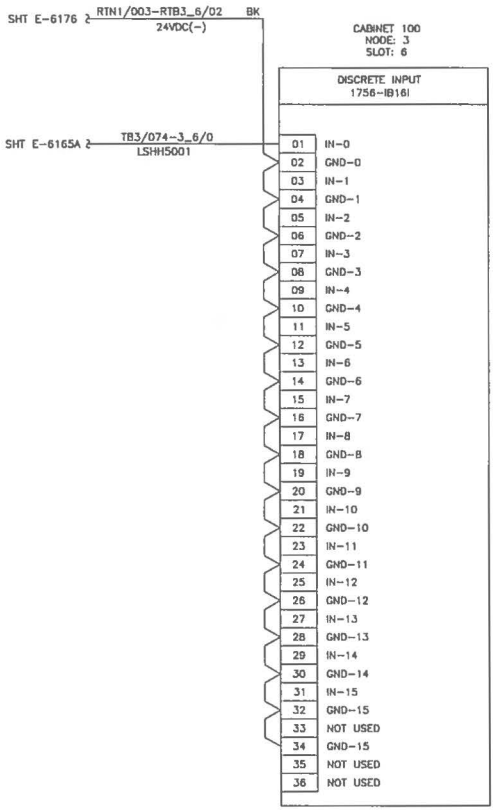

NO	DATE	CLASS REV	ADC	DESCRIPTION	DWN	DES	CHKD	SUB	APP

AECOM

RLWTF-UP LOW LEVEL WASTE SUBPROJECT

CAB-100 PANEL TERMINATION

BLDG. 230 TA-50

DRAWN	V DAVISON
DESIGN	S MOORE
CHECKED	G MOE
DATE	5/8/14

SUBMITTED MANNY TARIN

APPROVED FOR RELEASE ED ARTIGLIA

Los Alamos NATIONAL LABORATORY PO Box 1663 Los Alamos, New Mexico 87545

SHEET E-6165C

389 OF 434

CLASSIFICATION | REVIEWER | DATE

PROJECT ID 100761 | DRAWING NO C55864 | REV 0

EUGENE DAVID MOE NEW MEXICO 21369 PROFESSIONAL ENGINEER

File Location: P:\RLWTF LOW-LEVEL WASTE FACILITY\500 CAD\C55864 MAIN BUILDING\SHEETS\16 ELECTRICAL\55864-E-6165C-RD.DWG
Plotted By: MOORE, STEPHEN Plot Date: Monday, May 05, 2014

12440

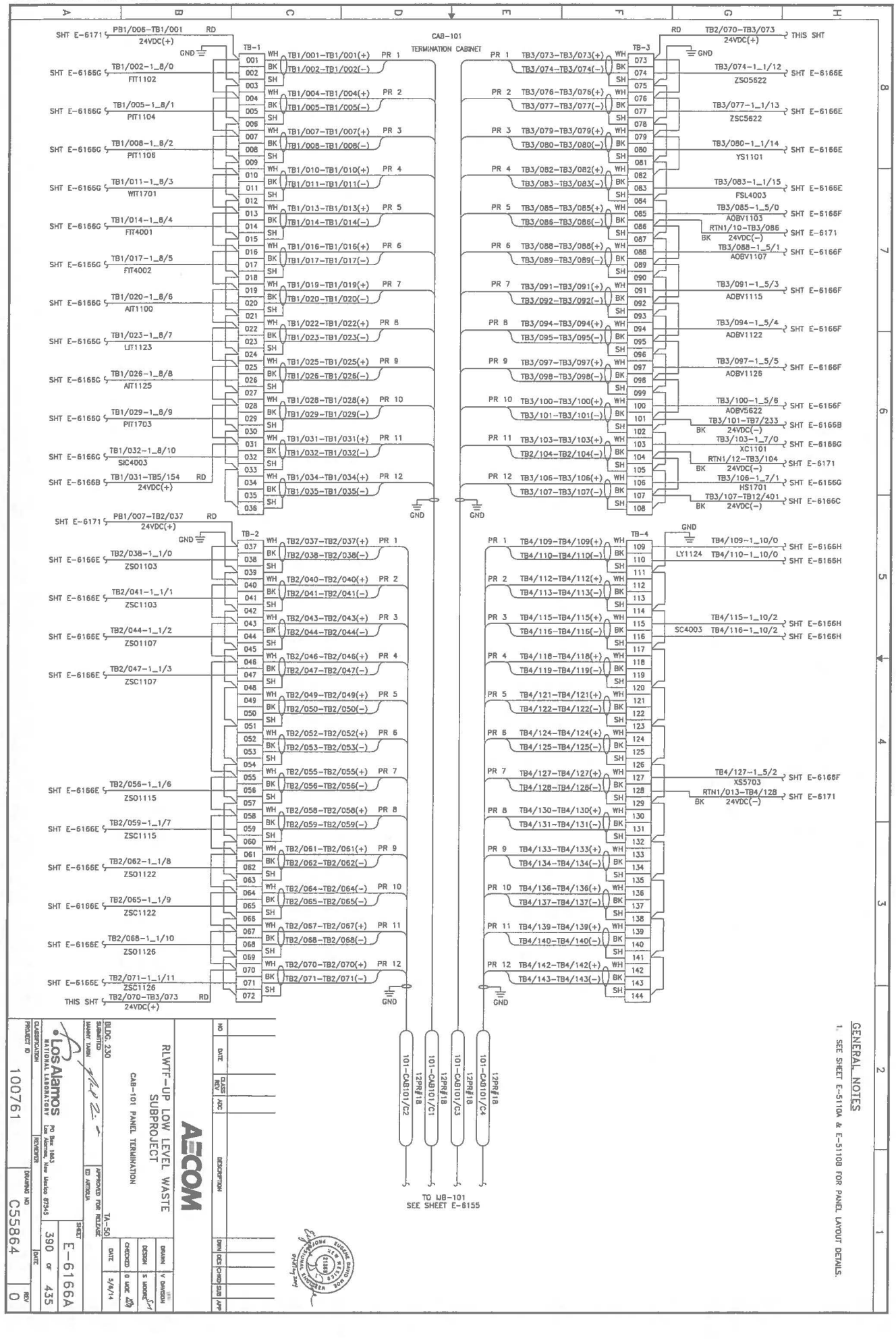
File Location: P:\RLWTF LOW-LEVEL WASTE FACILITY\500 CAD\C55864 MAIN BUILDING\SHEETS\18 ELECTRICAL\55864-E-6166A-RD.DWG
Plotted By: MOORE, STEPHEN Plot Date: Monday, May 05, 2014
CAB-101
TERMINATION CABINET
TB-1
TB-2
TB-3
TB-4
GENERAL NOTES
1. SEE SHEET E-5110A & E-5110B FOR PANEL LAYOUT DETAILS.
TO JB-101
SEE SHEET E-6155
RLWTF-LIP LOW LEVEL WASTE
SUBPROJECT
CAB-101 PANEL TERMINATION
AECOM
Los Alamos
NATIONAL LABORATORY
E-6166A

Exhibit :

File Location: P:\RLWTF LOW-LEVEL WASTE FACILITY\500 CAD\C55864 MAIN BUILDING\SHEETS\18 ELECTRICAL\55864-E-6166B-RD.DWG
Plotted By: MOORE, STEPHEN Plot Date: Monday, May 05, 2014

CAB-101
TERMINATION CABINET

TB-5

145	WH	TB1/001-TB5/145(+)	PR 1
146	BK	TB1/002-TB5/146(-)	
147	SH		
148	WH	TB1/004-TB5/148(+)	PR 2
149	BK	TB1/005-TB5/149(-)	
150	SH		
151	WH	TB1/007-TB5/151(+)	PR 3
152	BK	TB1/008-TB1/152(-)	
153	SH		
154	WH	TB1/010-TB5/154(+)	PR 4
155	BK	TB1/011-TB1/155(-)	
156	SH		
157	WH	TB1/013-TB5/157(+)	PR 5
158	BK	TB1/014-TB5/158(-)	
159	SH		
160	WH	TB1/016-TB5/160(+)	PR 6
161	BK	TB1/017-TB5/161(-)	
162	SH		
163	WH	TB1/019-TB5/163(+)	PR 7
164	BK	TB1/020-TB5/164(-)	
165	SH		
166	WH	TB1/022-TB5/166(+)	PR 8
167	BK	TB1/023-TB5/167(-)	
168	SH		
169	WH	TB1/025-TB5/169(+)	PR 9
170	BK	TB1/026-TB5/170(-)	
171	SH		
172	WH	TB1/028-TB5/172(+)	PR 10
173	BK	TB1/029-TB5/173(-)	
174	SH		
175	WH	TB1/031-TB5/175(+)	PR 11
176	BK	TB1/032-TB5/176(-)	
177	SH		
178	WH	TB1/034-TB5/178(+)	PR 12
179	BK	TB1/035-TB5/179(-)	
180	SH		

GND

SHT E-6166A ← TB1/031-TB5/154 RD 24VDC(+)
SHT E-6166G ← TB5/155-1_8/14 LIT1124
SHT E-6166G ← TB5/158-1_8/15 PIT1211
SHT E-6171 ← PB1/008-TB5/160 RD 24VDC(+)
SHT E-6166G ← TB5/161-1_9/0 PIT1218
SHT E-6166G ← TB5/164-1_9/1 LIT4200
SHT E-6156C ← TB5/166-TB9/289 RD 24VDC(+)
SHT E-6166G ← TB5/167-1_9/2 LIT4201

TB-7

PR 1	TB3/073-TB7/217(+)	WH	217
	TB3/074-TB7/218(-)	BK	218
		SH	219
PR 2	TB3/076-TB7/220(+)	WH	220
	TB3/077-TB7/221(-)	BK	221
		SH	222
PR 3	TB3/079-TB7/223(+)	WH	223
	TB3/080-TB7/224(-)	BK	224
		SH	225
PR 4	TB3/082-TB7/226(+)	WH	226
	TB3/083-TB7/227(-)	BK	227
		SH	228
PR 5	TB3/085-TB7/229(+)	WH	229
	TB3/086-TB7/230(-)	BK	230
		SH	231
PR 6	TB3/088-TB7/232(+)	WH	232
	TB3/089-TB7/233(-)	BK	233
		SH	234
PR 7	TB3/091-TB7/235(+)	WH	235
	TB3/092-TB7/236(-)	BK	236
		SH	237
PR 8	TB3/094-TB7/238(+)	WH	238
	TB3/095-TB7/239(-)	BK	239
		SH	240
PR 9	TB3/097-TB7/241(+)	WH	241
	TB3/098-TB7/242(-)	BK	242
		SH	243
PR 10	TB3/100-TB7/244(+)	WH	244
	TB3/101-TB7/245(-)	BK	245
		SH	246
PR 11	TB3/103-TB7/247(+)	WH	247
	TB3/104-TB7/248(-)	BK	248
		SH	249
PR 12	TB3/106-TB7/250(+)	WH	250
	TB3/107-TB7/251(-)	BK	251
		SH	252

GND

TB7/232-1_5/10 AOBV5627 → SHT E-6166F
BK TB3/101-TB7/233 24VDC(-) → SHT E-6166A
TB7/235-1_5/11 AOBV5623 → SHT E-6166F
TB7/238-1_5/12 AOBV1124 → SHT E-6166F
TB7/244-1_10/3 → SHT E-6166H
TB7/245-1_10/3 FY1206 → SHT E-6166H

TB-6

181	WH	TB2/037-TB6/181(+)	PR 1
182	BK	TB2/038-TB6/182(-)	
183	SH		
184	WH	TB2/040-TB6/184(+)	PR 2
185	BK	TB2/041-TB6/185(-)	
186	SH		
187	WH	TB2/043-TB6/187(+)	PR 3
188	BK	TB2/044-TB6/188(-)	
189	SH		
190	WH	TB2/046-TB6/190(+)	PR 4
191	BK	TB2/047-TB6/191(-)	
192	SH		
193	WH	TB2/049-TB6/193(+)	PR 5
194	BK	TB2/050-TB6/194(-)	
195	SH		
196	WH	TB2/052-TB6/196(+)	PR 6
197	BK	TB2/053-TB6/197(-)	
198	SH		
199	WH	TB2/055-TB6/199(+)	PR 7
200	BK	TB2/056-TB6/200(-)	
201	SH		
202	WH	TB2/058-TB6/202(+)	PR 8
203	BK	TB2/059-TB6/203(-)	
204	SH		
205	WH	TB2/061-TB6/205(+)	PR 9
206	BK	TB2/062-TB6/206(-)	
207	SH		
208	WH	TB2/064-TB6/208(-)	PR 10
209	BK	TB2/065-TB6/209(-)	
210	SH		
211	WH	TB2/067-TB6/211(+)	PR 11
212	BK	TB2/068-TB6/212(-)	
213	SH		
214	WH	TB2/070-TB6/214(+)	PR 12
215	BK	TB2/071-TB6/215(-)	
216	SH		

GND

SHT E-6171 ← PB1/009-TB6/193 RD 24VDC(+)
SHT E-6166E ← TB6/194-1_2/4 ZSO5627
SHT E-6166E ← TB6/197-1_2/5 ZSC5627
SHT E-6166E ← TB6/200-1_2/6 ZSO5623
SHT E-6166E ← TB6/203-1_2/7 ZSC5623
SHT E-6166E ← TB6/206-1_2/8 ZSO1124
SHT E-6166E ← TB6/209-1_2/9 ZSC1124

102-CAB101/C2 12PR#18
102-CAB101/C1 12PR#18
102-CAB101/C3 12PR#18

TO LJB-102
SEE SHEET E-6156

NO	DATE	CLASS REV	ADC	DESCRIPTION	DWN	DES	CHKD	SUBJ	APP

AECOM

RLWTF-UP LOW LEVEL WASTE SUBPROJECT

CAB-101 PANEL TERMINATION

BLDG. 230 TA-50

DESIGN S MOORE 5/9/14
DRAWN V DAVISON
CHECKED G MOE
DATE

SUBMITTED SHAWN THRON
APPROVED FOR RELEASE ED ARTEAGA

Los Alamos NATIONAL LABORATORY
PO Box 1663 Los Alamos, New Mexico 87545

CLASSIFICATION
PROJECT ID 100761
RCW/ORDER
DRAWING NO C55864
SHEET E-6166B
DATE
391 OF 435
REV 0

PROFESSIONAL ENGINEER STATE OF NEW MEXICO 21683 EUGENE DAVID MOE

File Location: P:\RLWTF LOW-LEVEL WASTE FACILITY\500 CAD\C55864 MAIN BUILDING\SHEETS\16 ELECTRICAL\55864-E-6166C-R0.DWG
Plotted By: MOORE, STEPHEN Plot Date: Monday, May 05, 2014

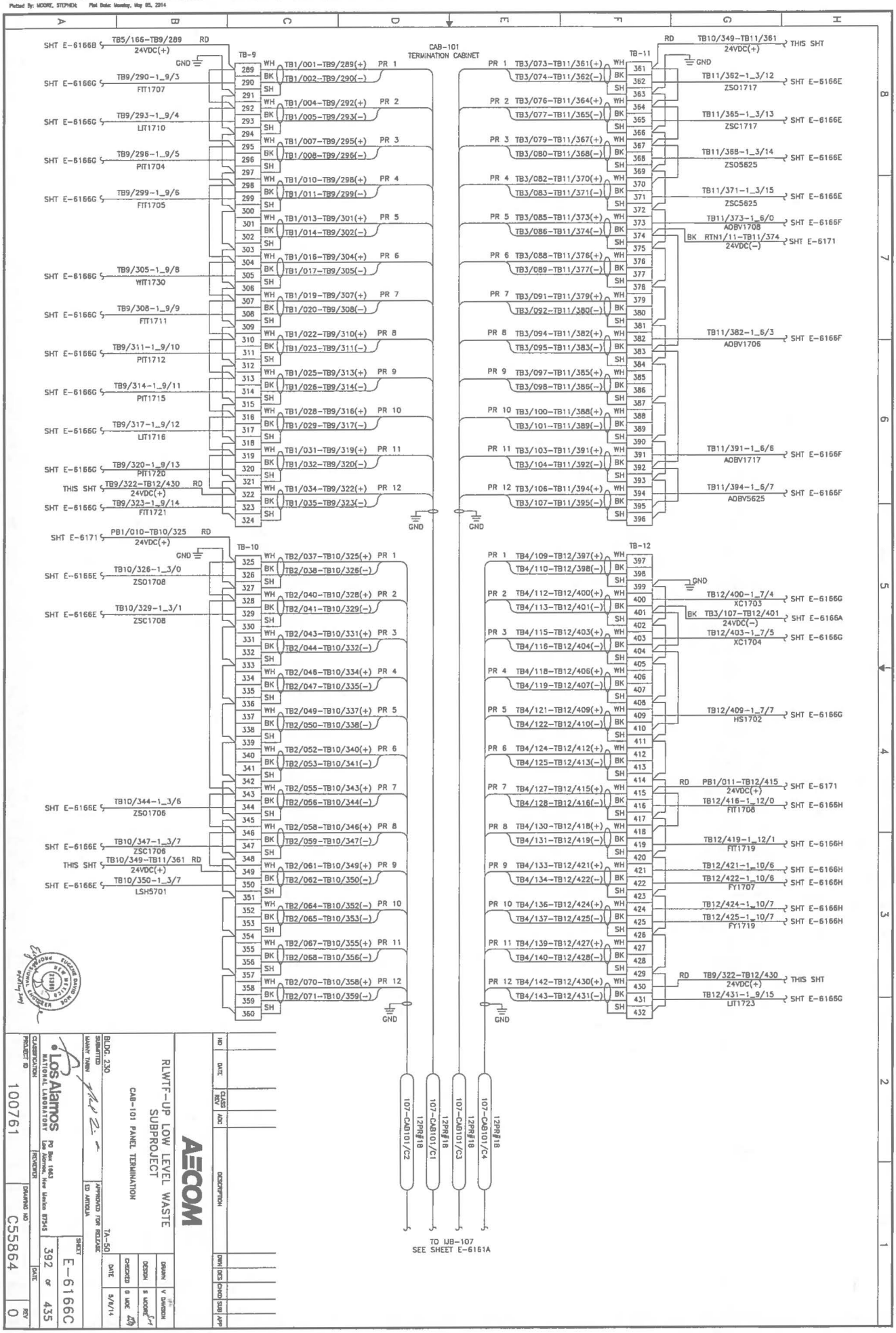

AECOM

RLWTF-UP LOW LEVEL WASTE SUBPROJECT

CAB-101 PANEL TERMINATION

BLDG. 230 TA-50

SUBMITTED MANNY TABIN

APPROVED FOR RELEASE ED ARTIGLIA

Los Alamos NATIONAL LABORATORY PO Box 1663 Los Alamos, New Mexico 87545

CLASSIFICATION

PROJECT ID 100761

DRAWING NO C55864

SHEET E-6166C

392 OF 435

REV 0

DRAWN V DAVISON

DESIGN S MOORE

CHECKED G MOE

DATE 5/8/14

DRAWN DES CHKD SUB APP

NO DATE CLASS REV ADC DESCRIPTION

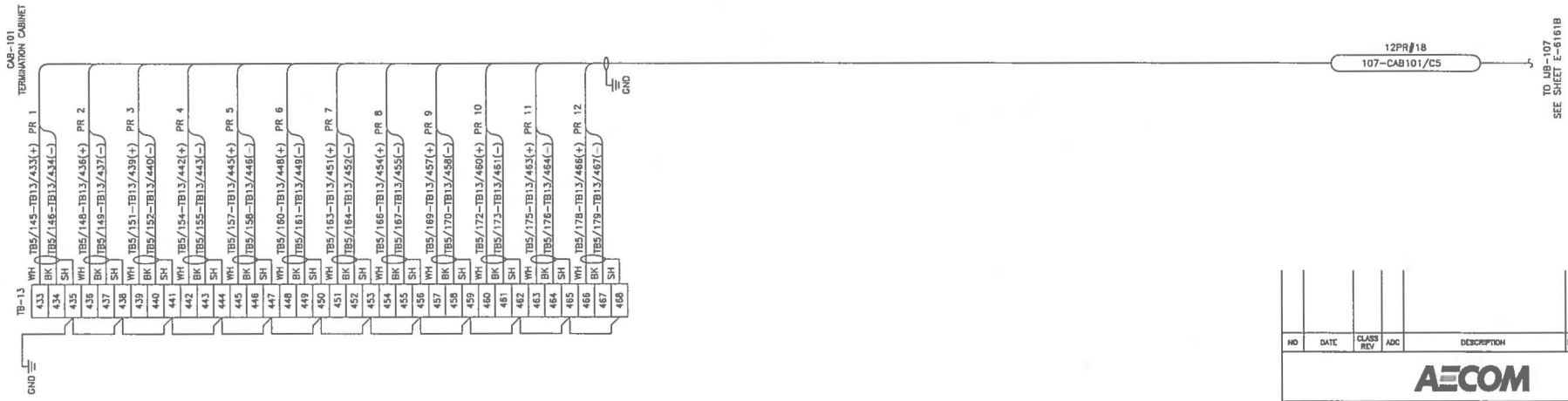

NO	DATE	CLASS REV	ADC	DESCRIPTION	DWN	DES	CHKD	SUB	APP

AECOM

RLWTF-UP LOW LEVEL WASTE SUBPROJECT

CAB-101 PANEL TERMINATION

BLDG. 230 TA-50

DRAWN	V DAVISON
DESIGN	S MOORE
CHECKED	G MOE
DATE	5/8/14

SUBMITTED MANNY TARIN

APPROVED FOR RELEASE ED ARTIGLIA

Los Alamos NATIONAL LABORATORY PO Box 1663 Los Alamos, New Mexico 87545

SHEET E-6166D

393 OF 434

CLASSIFICATION REVIEWER DATE

PROJECT ID 100761

DRAWING NO C55864

REV 0

EUGENE DAVID MOE NEW MEXICO 21369 PROFESSIONAL ENGINEER

File Location: P:\RLWTF LOW-LEVEL WASTE FACILITY\500 CAD\C55864 MAIN BUILDING\SHEETS\18 ELECTRICAL\55864-E-6166D-RD.DWG
Plotted By: MOORE, STEPHEN Plot Date: Monday, May 05, 2014

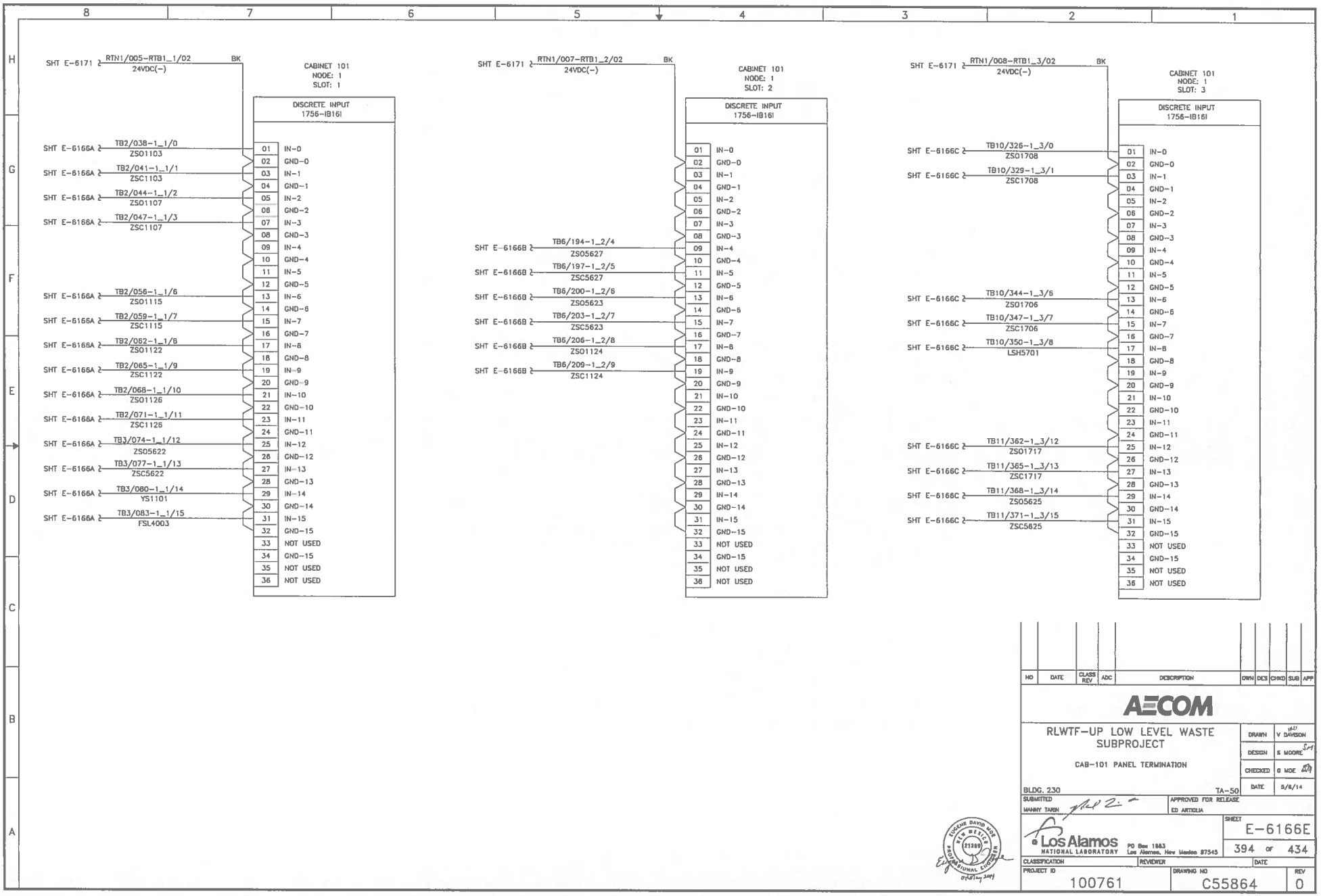
8
7
6
5
4
3
2
1
H
G
F
E
D
C
B
A
SHT E-6171 RTN1/005-RTB1_1/02 24VDC(-) BK
CABINET 101
NODE: 1
SLOT: 1
DISCRETE INPUT
1756-IB16I
SHT E-6166A TB2/038-1_1/0 ZSO1103
SHT E-6166A TB2/041-1_1/1 ZSC1103
SHT E-6166A TB2/044-1_1/2 ZSO1107
SHT E-6166A TB2/047-1_1/3 ZSC1107
SHT E-6166A TB2/056-1_1/6 ZSO1115
SHT E-6166A TB2/059-1_1/7 ZSC1115
SHT E-6166A TB2/062-1_1/8 ZSO1122
SHT E-6166A TB2/065-1_1/9 ZSC1122
SHT E-6166A TB2/068-1_1/10 ZSO1126
SHT E-6166A TB2/071-1_1/11 ZSC1126
SHT E-6166A TB3/074-1_1/12 ZSO5622
SHT E-6166A TB3/077-1_1/13 ZSC5622
SHT E-6166A TB3/080-1_1/14 YS1101
SHT E-6166A TB3/083-1_1/15 FSL4003
01 IN-0
02 GND-0
03 IN-1
04 GND-1
05 IN-2
06 GND-2
07 IN-3
08 GND-3
09 IN-4
10 GND-4
11 IN-5
12 GND-5
13 IN-6
14 GND-6
15 IN-7
16 GND-7
17 IN-8
18 GND-8
19 IN-9
20 GND-9
21 IN-10
22 GND-10
23 IN-11
24 GND-11
25 IN-12
26 GND-12
27 IN-13
28 GND-13
29 IN-14
30 GND-14
31 IN-15
32 GND-15
33 NOT USED
34 GND-15
35 NOT USED
36 NOT USED
SHT E-6171 RTN1/007-RTB1_2/02 24VDC(-) BK
CABINET 101
NODE: 1
SLOT: 2
DISCRETE INPUT
1756-IB16I
SHT E-6166B TB6/194-1_2/4 ZSO5627
SHT E-6166B TB6/197-1_2/5 ZSC5627
SHT E-6166B TB6/200-1_2/6 ZSO5623
SHT E-6166B TB6/203-1_2/7 ZSC5623
SHT E-6166B TB6/206-1_2/8 ZSO1124
SHT E-6166B TB6/209-1_2/9 ZSC1124
01 IN-0
02 GND-0
03 IN-1
04 GND-1
05 IN-2
06 GND-2
07 IN-3
08 GND-3
09 IN-4
10 GND-4
11 IN-5
12 GND-5
13 IN-6
14 GND-6
15 IN-7
16 GND-7
17 IN-8
18 GND-8
19 IN-9
20 GND-9
21 IN-10
22 GND-10
23 IN-11
24 GND-11
25 IN-12
26 GND-12
27 IN-13
28 GND-13
29 IN-14
30 GND-14
31 IN-15
32 GND-15
33 NOT USED
34 GND-15
35 NOT USED
36 NOT USED
SHT E-6171 RTN1/008-RTB1_3/02 24VDC(-) BK
CABINET 101
NODE: 1
SLOT: 3
DISCRETE INPUT
1756-IB16I
SHT E-6166C TB10/326-1_3/0 ZSO1708
SHT E-6166C TB10/329-1_3/1 ZSC1708
SHT E-6166C TB10/344-1_3/6 ZSO1706
SHT E-6166C TB10/347-1_3/7 ZSC1706
SHT E-6166C TB10/350-1_3/8 LSH5701
SHT E-6166C TB11/362-1_3/12 ZSO1717
SHT E-6166C TB11/365-1_3/13 ZSC1717
SHT E-6166C TB11/368-1_3/14 ZSO5625
SHT E-6166C TB11/371-1_3/15 ZSC5625
01 IN-0
02 GND-0
03 IN-1
04 GND-1
05 IN-2
06 GND-2
07 IN-3
08 GND-3
09 IN-4
10 GND-4
11 IN-5
12 GND-5
13 IN-6
14 GND-6
15 IN-7
16 GND-7
17 IN-8
18 GND-8
19 IN-9
20 GND-9
21 IN-10
22 GND-10
23 IN-11
24 GND-11
25 IN-12
26 GND-12
27 IN-13
28 GND-13
29 IN-14
30 GND-14
31 IN-15
32 GND-15
33 NOT USED
34 GND-15
35 NOT USED
36 NOT USED
NO
DATE
CLASS REV
ADC
DESCRIPTION
DWN
DES
CHKD
SUB
APP
AECOM
RLWTF-UP LOW LEVEL WASTE SUBPROJECT
CAB-101 PANEL TERMINATION
DRAWN V DAVIDSON
DESIGN E MOORE
CHECKED G MOE
DATE 5/6/14
BLDG. 230
TA-50
SUBMITTED MANNY TARIN
APPROVED FOR RELEASE ED ARTIGLIA
Los Alamos NATIONAL LABORATORY
PO Box 1663 Los Alamos, New Mexico 87545
SHEET E-6166E
394 OF 434
CLASSIFICATION
REVIEWER
DATE
PROJECT ID 100761
DRAWING NO C55864
REV 0
EUGENE DAVID MOE NEW MEXICO 21389 PROFESSIONAL ENGINEER
Sheet 1 of 1
File Location: P:\RLWTF LOW-LEVEL WASTE FACILITY\500 CAD\C55864 MAIN BUILDING\SHEETS\18 ELECTRICAL\A5864-E-6166E-R0.DWG
Plotted By: MOORE, STEPHEN Plot Date: Monday, May 05, 2014

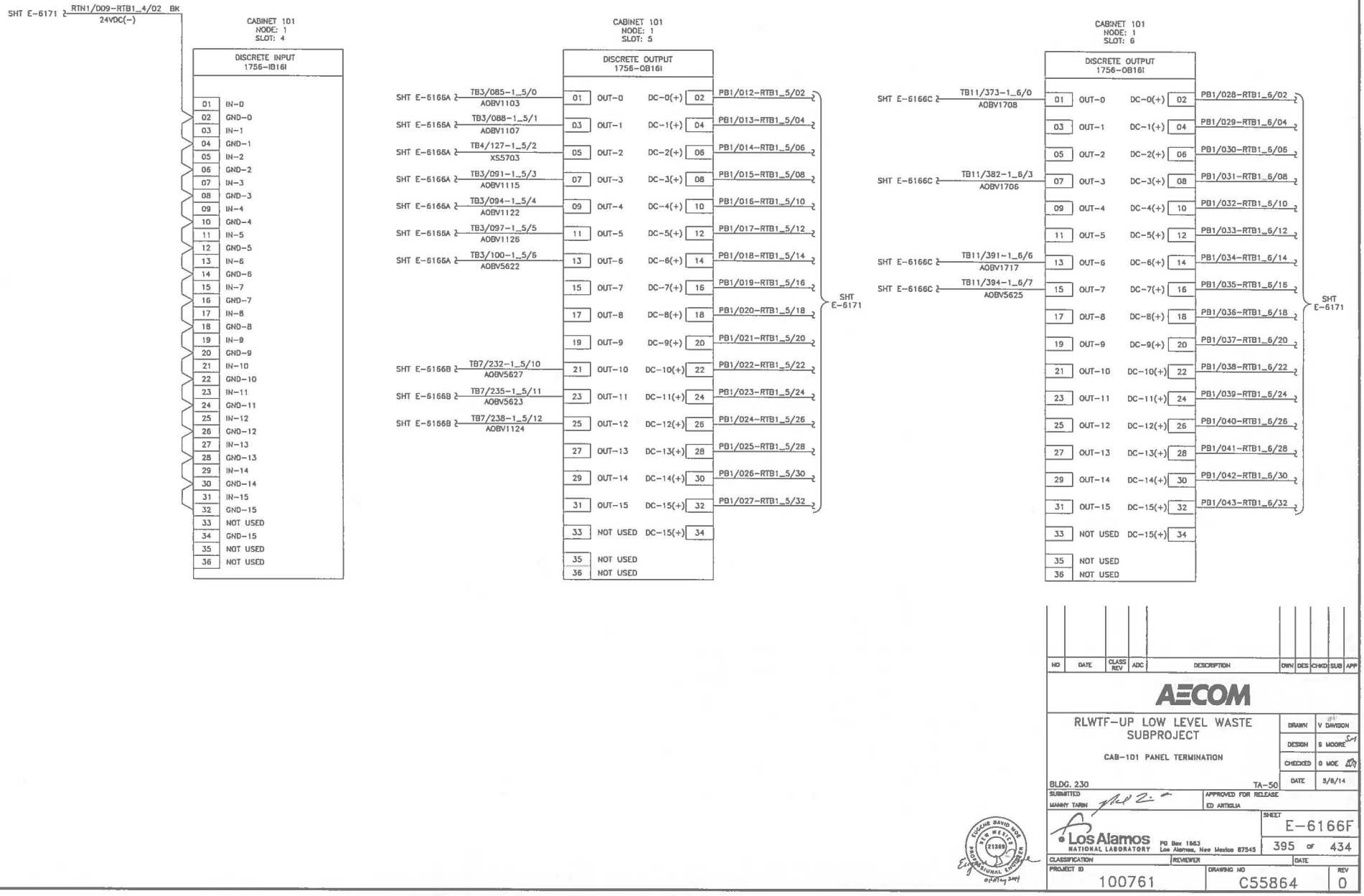
SHT E-6171
RTN1/D09-RTB1_4/02 BK
24VDC(-)
CABINET 101
NODE: 1
SLOT: 4
DISCRETE INPUT
1756-IB16I
01 IN-0
02 GND-0
03 IN-1
04 GND-1
05 IN-2
06 GND-2
07 IN-3
08 GND-3
09 IN-4
10 GND-4
11 IN-5
12 GND-5
13 IN-6
14 GND-6
15 IN-7
16 GND-7
17 IN-8
18 GND-8
19 IN-9
20 GND-9
21 IN-10
22 GND-10
23 IN-11
24 GND-11
25 IN-12
26 GND-12
27 IN-13
28 GND-13
29 IN-14
30 GND-14
31 IN-15
32 GND-15
33 NOT USED
34 GND-15
35 NOT USED
36 NOT USED
CABINET 101
NODE: 1
SLOT: 5
DISCRETE OUTPUT
1756-OB16I
SHT E-6166A TB3/085-1_5/0 AOBV1103
SHT E-6166A TB3/088-1_5/1 AOBV1107
SHT E-6166A TB4/127-1_5/2 XS5703
SHT E-6166A TB3/091-1_5/3 AOBV1115
SHT E-6166A TB3/094-1_5/4 AOBV1122
SHT E-6166A TB3/097-1_5/5 AOBV1126
SHT E-6166A TB3/100-1_5/6 AOBV5622
SHT E-6166B TB7/232-1_5/10 AOBV5627
SHT E-6166B TB7/235-1_5/11 AOBV5623
SHT E-6166B TB7/238-1_5/12 AOBV1124
01 OUT-0 DC-0(+) 02 PB1/012-RTB1_5/02
03 OUT-1 DC-1(+) 04 PB1/013-RTB1_5/04
05 OUT-2 DC-2(+) 06 PB1/014-RTB1_5/06
07 OUT-3 DC-3(+) 08 PB1/015-RTB1_5/08
09 OUT-4 DC-4(+) 10 PB1/016-RTB1_5/10
11 OUT-5 DC-5(+) 12 PB1/017-RTB1_5/12
13 OUT-6 DC-6(+) 14 PB1/018-RTB1_5/14
15 OUT-7 DC-7(+) 16 PB1/019-RTB1_5/16
17 OUT-8 DC-8(+) 18 PB1/020-RTB1_5/18
19 OUT-9 DC-9(+) 20 PB1/021-RTB1_5/20
21 OUT-10 DC-10(+) 22 PB1/022-RTB1_5/22
23 OUT-11 DC-11(+) 24 PB1/023-RTB1_5/24
25 OUT-12 DC-12(+) 26 PB1/024-RTB1_5/26
27 OUT-13 DC-13(+) 28 PB1/025-RTB1_5/28
29 OUT-14 DC-14(+) 30 PB1/026-RTB1_5/30
31 OUT-15 DC-15(+) 32 PB1/027-RTB1_5/32
33 NOT USED DC-15(+) 34
35 NOT USED
36 NOT USED
SHT E-6171
CABINET 101
NODE: 1
SLOT: 6
DISCRETE OUTPUT
1756-OB16I
SHT E-6166C TB11/373-1_6/0 AOBV1708
SHT E-6166C TB11/382-1_6/3 AOBV1706
SHT E-6166C TB11/391-1_6/6 AOBV1717
SHT E-6166C TB11/394-1_6/7 AOBV5625
01 OUT-0 DC-0(+) 02 PB1/028-RTB1_6/02
03 OUT-1 DC-1(+) 04 PB1/029-RTB1_6/04
05 OUT-2 DC-2(+) 06 PB1/030-RTB1_6/06
07 OUT-3 DC-3(+) 08 PB1/031-RTB1_6/08
09 OUT-4 DC-4(+) 10 PB1/032-RTB1_6/10
11 OUT-5 DC-5(+) 12 PB1/033-RTB1_6/12
13 OUT-6 DC-6(+) 14 PB1/034-RTB1_6/14
15 OUT-7 DC-7(+) 16 PB1/035-RTB1_6/16
17 OUT-8 DC-8(+) 18 PB1/036-RTB1_6/18
19 OUT-9 DC-9(+) 20 PB1/037-RTB1_6/20
21 OUT-10 DC-10(+) 22 PB1/038-RTB1_6/22
23 OUT-11 DC-11(+) 24 PB1/039-RTB1_6/24
25 OUT-12 DC-12(+) 26 PB1/040-RTB1_6/26
27 OUT-13 DC-13(+) 28 PB1/041-RTB1_6/28
29 OUT-14 DC-14(+) 30 PB1/042-RTB1_6/30
31 OUT-15 DC-15(+) 32 PB1/043-RTB1_6/32
33 NOT USED DC-15(+) 34
35 NOT USED
36 NOT USED
SHT E-6171
NO DATE CLASS REV ADC DESCRIPTION DWN DES CHKD SUB APP
AECOM
RLWTF-UP LOW LEVEL WASTE SUBPROJECT
CAB-101 PANEL TERMINATION
DRAWN V DAMSON
DESIGN S MOORE
CHECKED G MOE
DATE 5/8/14
BLDG. 230 TA-50
SUBMITTED MANNY TARIN
APPROVED FOR RELEASE ED ARTIGLIA
Los Alamos NATIONAL LABORATORY PO Box 1663 Los Alamos, New Mexico 87545
SHEET E-6166F
395 OF 434
CLASSIFICATION REVIEWER DATE
PROJECT ID 100761
DRAWING NO C55864
REV 0
EUGENE DAVID HOSE 21389 NEW MEXICO PROFESSIONAL ENGINEER
File Location: P:\RLWTF LOW-LEVEL WASTE FACILITY\300 CAD\C55864 MAIN BUILDING\SHEETS\18 ELECTRICAL\55864-E-6166F-RO.DWG
Plotted By: EDOZ, STEVEDO Plot Date: Monday, May 05, 2014

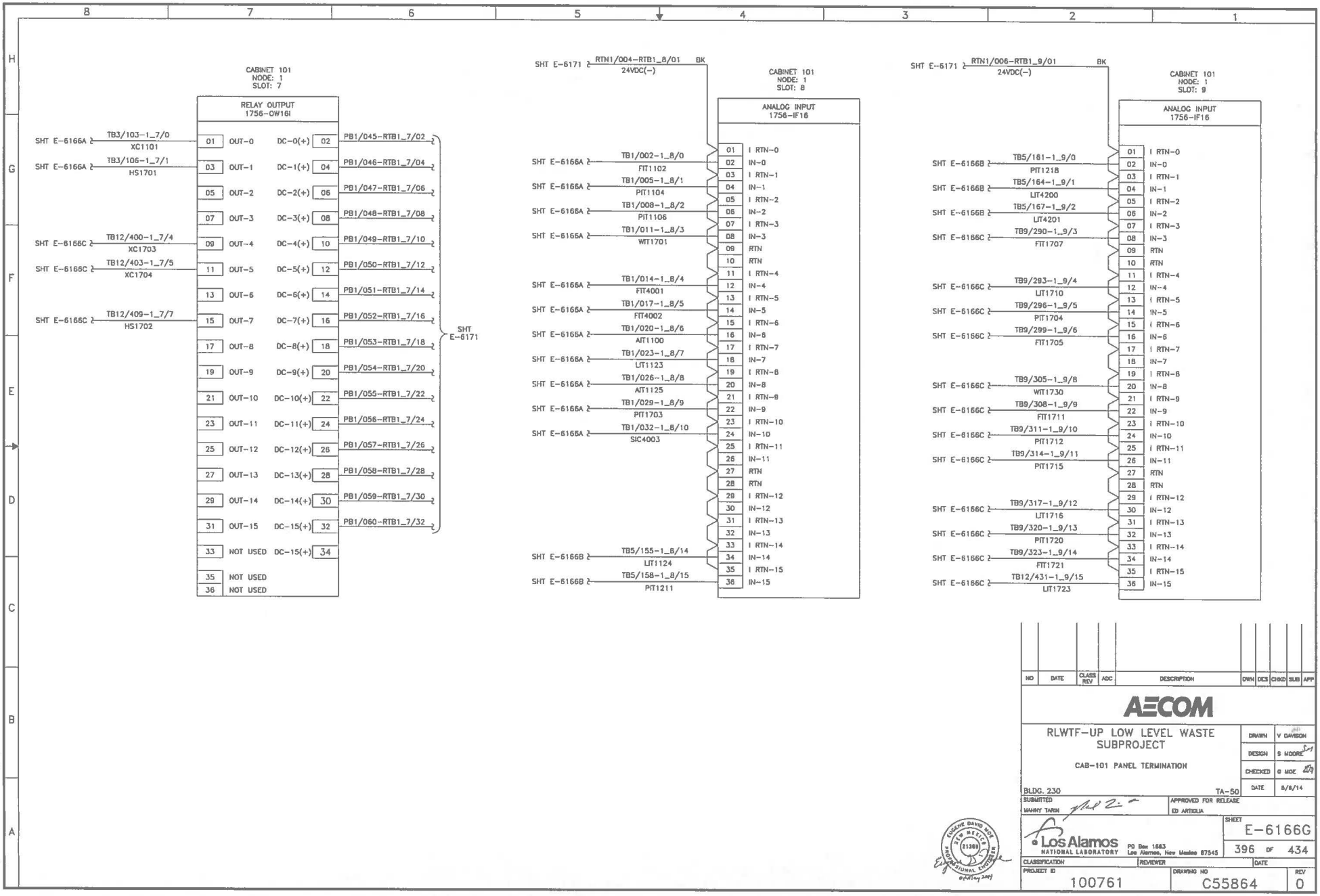
CABINET 101
NODE: 1
SLOT: 7
RELAY OUTPUT
1756-OW16I
SHT E-6166A TB3/103-1_7/0 XC1101
SHT E-6166A TB3/106-1_7/1 HS1701
SHT E-6166C TB12/400-1_7/4 XC1703
SHT E-6166C TB12/403-1_7/5 XC1704
SHT E-6166C TB12/409-1_7/7 HS1702
01 OUT-0 DC-0(+) 02 PB1/045-RTB1_7/02
03 OUT-1 DC-1(+) 04 PB1/046-RTB1_7/04
05 OUT-2 DC-2(+) 06 PB1/047-RTB1_7/06
07 OUT-3 DC-3(+) 08 PB1/048-RTB1_7/08
09 OUT-4 DC-4(+) 10 PB1/049-RTB1_7/10
11 OUT-5 DC-5(+) 12 PB1/050-RTB1_7/12
13 OUT-6 DC-6(+) 14 PB1/051-RTB1_7/14
15 OUT-7 DC-7(+) 16 PB1/052-RTB1_7/16
17 OUT-8 DC-8(+) 18 PB1/053-RTB1_7/18
19 OUT-9 DC-9(+) 20 PB1/054-RTB1_7/20
21 OUT-10 DC-10(+) 22 PB1/055-RTB1_7/22
23 OUT-11 DC-11(+) 24 PB1/056-RTB1_7/24
25 OUT-12 DC-12(+) 26 PB1/057-RTB1_7/26
27 OUT-13 DC-13(+) 28 PB1/058-RTB1_7/28
29 OUT-14 DC-14(+) 30 PB1/059-RTB1_7/30
31 OUT-15 DC-15(+) 32 PB1/060-RTB1_7/32
33 NOT USED DC-15(+) 34
35 NOT USED
36 NOT USED
SHT E-6171
SHT E-6171 RTN1/004-RTB1_8/01 24VDC(-) BK
CABINET 101
NODE: 1
SLOT: 8
ANALOG INPUT
1756-IF16
SHT E-6166A TB1/002-1_8/0 FIT1102
SHT E-6166A TB1/005-1_8/1 PIT1104
SHT E-6166A TB1/008-1_8/2 PIT1106
SHT E-6166A TB1/011-1_8/3 WIT1701
SHT E-6166A TB1/014-1_8/4 FIT4001
SHT E-6166A TB1/017-1_8/5 FIT4002
SHT E-6166A TB1/020-1_8/6 AIT1100
SHT E-6166A TB1/023-1_8/7 LIT1123
SHT E-6166A TB1/026-1_8/8 AIT1125
SHT E-6166A TB1/029-1_8/9 PIT1703
SHT E-6166A TB1/032-1_8/10 SIC4003
SHT E-6166B TB5/155-1_8/14 LIT1124
SHT E-6166B TB5/158-1_8/15 PIT1211
01 I RTN-0
02 IN-0
03 I RTN-1
04 IN-1
05 I RTN-2
06 IN-2
07 I RTN-3
08 IN-3
09 RTN
10 RTN
11 I RTN-4
12 IN-4
13 I RTN-5
14 IN-5
15 I RTN-6
16 IN-6
17 I RTN-7
18 IN-7
19 I RTN-8
20 IN-8
21 I RTN-9
22 IN-9
23 I RTN-10
24 IN-10
25 I RTN-11
26 IN-11
27 RTN
28 RTN
29 I RTN-12
30 IN-12
31 I RTN-13
32 IN-13
33 I RTN-14
34 IN-14
35 I RTN-15
36 IN-15
SHT E-6171 RTN1/006-RTB1_9/01 24VDC(-) BK
CABINET 101
NODE: 1
SLOT: 9
ANALOG INPUT
1756-IF16
SHT E-6166B TB5/161-1_9/0 PIT1218
SHT E-6166B TB5/164-1_9/1 LIT4200
SHT E-6166B TB5/167-1_9/2 LIT4201
SHT E-6166C TB9/290-1_9/3 FIT1707
SHT E-6166C TB9/293-1_9/4 LIT1710
SHT E-6166C TB9/296-1_9/5 PIT1704
SHT E-6166C TB9/299-1_9/6 FIT1705
SHT E-6166C TB9/305-1_9/8 WIT1730
SHT E-6166C TB9/308-1_9/9 FIT1711
SHT E-6166C TB9/311-1_9/10 PIT1712
SHT E-6166C TB9/314-1_9/11 PIT1715
SHT E-6166C TB9/317-1_9/12 LIT1716
SHT E-6166C TB9/320-1_9/13 PIT1720
SHT E-6166C TB9/323-1_9/14 FIT1721
SHT E-6166C TB12/431-1_9/15 LIT1723
01 I RTN-0
02 IN-0
03 I RTN-1
04 IN-1
05 I RTN-2
06 IN-2
07 I RTN-3
08 IN-3
09 RTN
10 RTN
11 I RTN-4
12 IN-4
13 I RTN-5
14 IN-5
15 I RTN-6
16 IN-6
17 I RTN-7
18 IN-7
19 I RTN-8
20 IN-8
21 I RTN-9
22 IN-9
23 I RTN-10
24 IN-10
25 I RTN-11
26 IN-11
27 RTN
28 RTN
29 I RTN-12
30 IN-12
31 I RTN-13
32 IN-13
33 I RTN-14
34 IN-14
35 I RTN-15
36 IN-15
NO DATE CLASS REV ADC DESCRIPTION DWN DES CHKD SUB APP
AECOM
RLWTF-UP LOW LEVEL WASTE SUBPROJECT
CAB-101 PANEL TERMINATION
DRAWN V DAVISON
DESIGN S MOORE
CHECKED G MOE
DATE 8/8/14
BLDG. 230 TA-50
SUBMITTED MANNY TARIN
APPROVED FOR RELEASE ED ARTIGLIA
Los Alamos NATIONAL LABORATORY PO Box 1663 Los Alamos, New Mexico 87545
SHEET E-6166G
396 OF 434
CLASSIFICATION REVIEWER DATE
PROJECT ID 100761
DRAWING NO C55864
REV 0
EUGENE DAVID MOE 21369 PROFESSIONAL ENGINEER
File Location: P:\RLWTF LOW-LEVEL WASTE FACILITY\500 CAD\C55864 MAIN BUILDING\SHEETS\16 ELECTRICAL\55864-E-61660-RG.dwg
Plotted By: MOE, EUGENE Plot Date: Monday, May 05, 2014

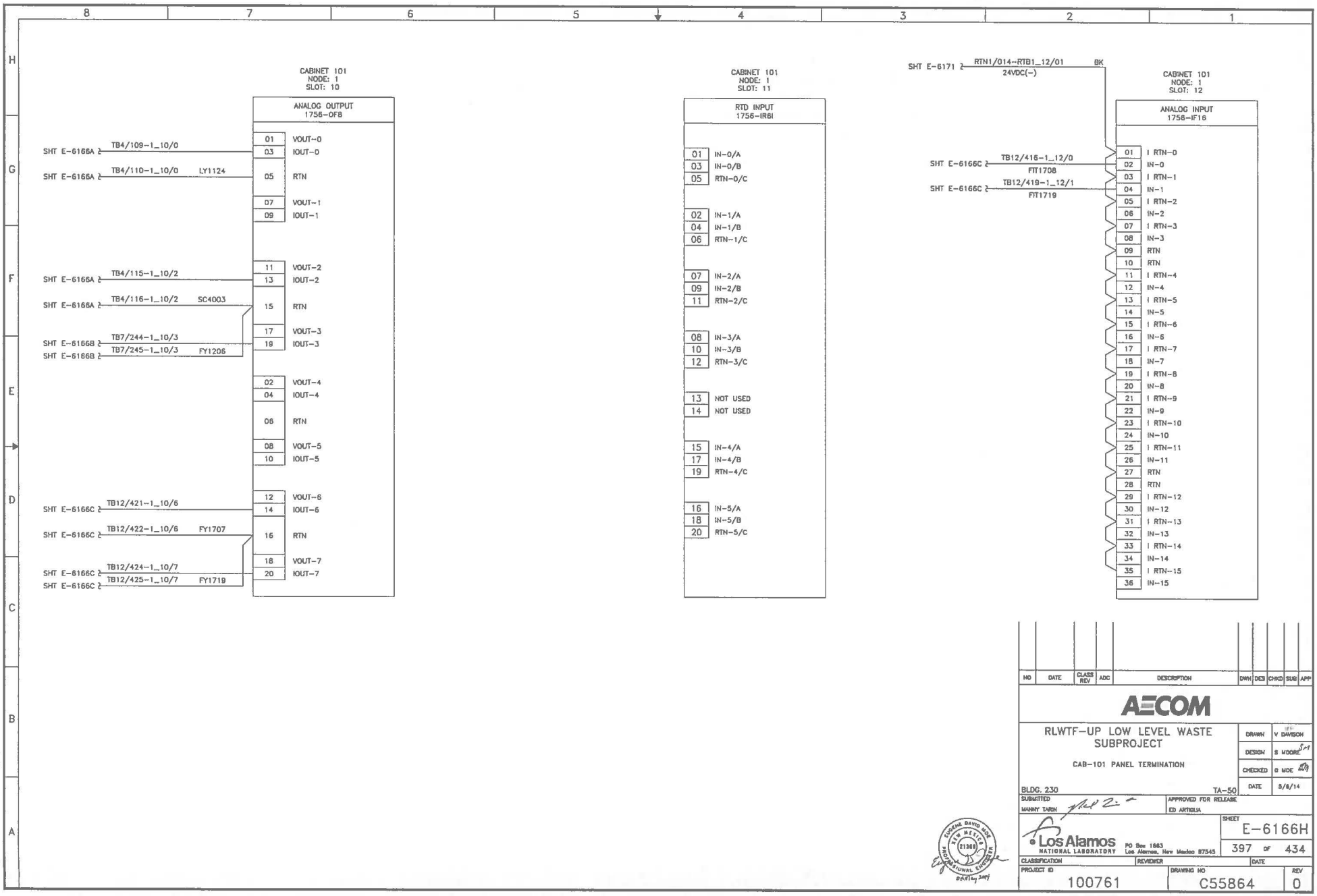

NO	DATE	CLASS REV	ADC	DESCRIPTION	DWN	DES	CHKD	SUB	APP

AECOM

RLWTF-UP LOW LEVEL WASTE SUBPROJECT

CAB-101 PANEL TERMINATION

BLDG. 230 TA-50

DRAWN	V DAVISON
DESIGN	S MOORE
CHECKED	G MOE
DATE	5/8/14

SUBMITTED MANNY TARIN

APPROVED FOR RELEASE ED ARTIGLIA

Los Alamos NATIONAL LABORATORY PO Box 1663 Los Alamos, New Mexico 87545

SHEET E-6166H

397 OF 434

CLASSIFICATION REVIEWER DATE

PROJECT ID 100761

DRAWING NO C55864

REV 0

EUGENE DAVID MOE NEW MEXICO 21368 PROFESSIONAL ENGINEER

File Location: P:\RLWTF LOW-LEVEL WASTE FACILITY\300 CAD\C55864 MAIN BUILDING\SHEETS\18 ELECTRICAL\55864-E-6166H-R0.DWG
Plotted By: MOORE, STEPHEN Plot Date: Monday, May 05, 2014

Sheet :

File Location: P:\RLWTF LOW-LEVEL WASTE FACILITY\500 CAD\C55864 MAIN BUILDING\SHEETS\18 ELECTRICAL\55864-E-6167A-R0.DWG
Plotted By: MOORE, STEPHEN Plot Date: Monday, May 05, 2014

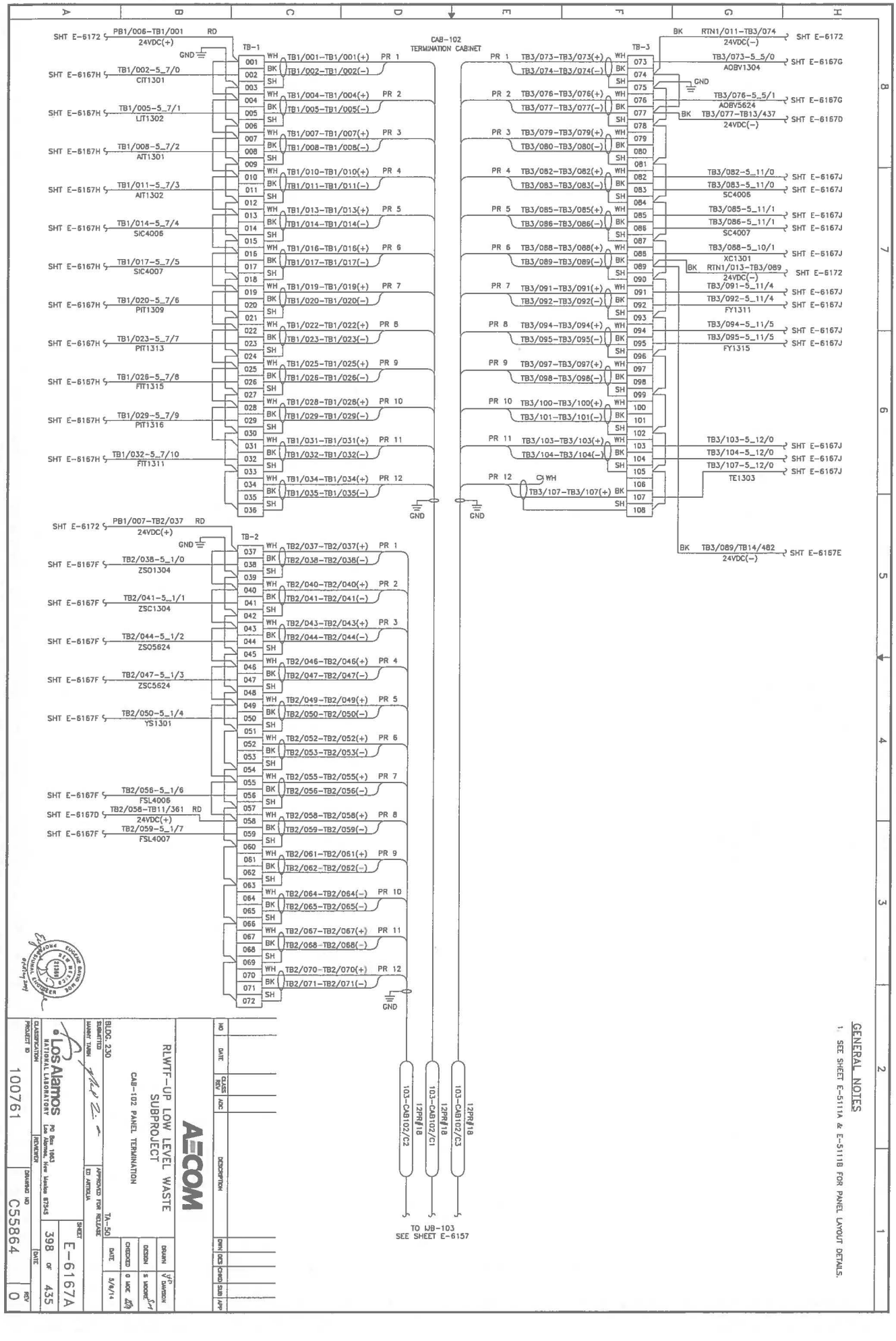

GENERAL NOTES

1. SEE SHEET E-5111A & E-5111B FOR PANEL LAYOUT DETAILS.

NO	DATE	CLASS REV	ADC	DESCRIPTION

RLWTF-UP LOW LEVEL WASTE SUBPROJECT

CAB-102 PANEL TERMINATION

BLDG. 230 TA-50

SUBMITTED JIMMY TAMM

APPROVED FOR RELEASE ED ARTEAGA

DRAWN J.D. DAVIDSON

DESIGN S. MOORE

CHECKED G. MOE 5/6/14

DWN DES CHKD SUB APP

AECOM

Los Alamos NATIONAL LABORATORY

PO Box 1663 Los Alamos, New Mexico 87545

ENGINEER

CLASSIFICATION

PROJECT ID 100761

DRAWING NO C55864

SHEET E-6167A

DATE 398 OF 435

REV 0

05h21 :

File Location: P:\RLWTF LOW-LEVEL WASTE FACILITY\300 CAD\C55864 MAIN BUILDING\SHEETS\16 ELECTRICAL\55864-E-6167B-R0.DWG
Plotted By: MOORE, STEPHEN Plot Date: Monday, May 05, 2014

CAB-102
TERMINATION CABINET

TB-4

SHT E-6167D TB10/349-TB4/109 RD 24VDC(+)
GND
SHT E-6167H TB4/110-5_8/7 AIT1345
SHT E-6167H TB4/113-5_8/8 CIT1343
SHT E-6167H TB4/116-5_8/9 PIT1337
SHT E-6167H TB4/119-5_8/10 LIT1344
SHT E-6167H TB4/122-5_8/11 SIC4010
SHT E-6167H TB4/125-5_8/12 SIC4011
SHT E-6167H TB4/128-5_8/15 AIT1345

109	WH	TB1/001-TB4/109(+)	PR 1
110	BK	TB1/002-TB4/110(-)	
111	SH		
112	WH	TB1/004-TB4/112(+)	PR 2
113	BK	TB1/005-TB4/113(-)	
114	SH		
115	WH	TB1/007-TB4/115(+)	PR 3
116	BK	TB1/008-TB4/116(-)	
117	SH		
118	WH	TB1/010-TB4/118(+)	PR 4
119	BK	TB1/011-TB4/119(-)	
120	SH		
121	WH	TB1/013-TB4/121(+)	PR 5
122	BK	TB1/014-TB4/122(-)	
123	SH		
124	WH	TB1/016-TB4/124(+)	PR 6
125	BK	TB1/017-TB4/125(-)	
126	SH		
127	WH	TB1/019-TB4/127(+)	PR 7
128	BK	TB1/020-TB4/128(-)	
129	SH		
130	WH	TB1/022-TB4/130(+)	PR 8
131	BK	TB1/023-TB4/131(-)	
132	SH		
133	WH	TB1/025-TB4/133(+)	PR 9
134	BK	TB1/026-TB4/134(-)	
135	SH		
136	WH	TB1/028-TB4/136(+)	PR 10
137	BK	TB1/029-TB4/137(-)	
138	SH		
139	WH	TB1/031-TB4/139(+)	PR 11
140	BK	TB1/032-TB4/140(-)	
141	SH		
142	WH	TB1/031-TB4/142(+)	PR 12
143	BK	TB1/032-TB4/143(-)	
144	SH		

GND

TB-6

GND

PR 1	WH	TB3/073-TB6/181(+)	
	BK	TB3/074-TB6/182(-)	
	SH		183
PR 2	WH	TB3/076-TB6/184(+)	184
	BK	TB3/077-TB6/185(-)	185
	SH		186
PR 3	WH	TB3/079-TB6/187(+)	187
	BK	TB3/080-TB6/188(-)	188
	SH		189
PR 4	WH	TB3/082-TB6/190(+)	190
	BK	TB3/083-TB6/191(-)	191
	SH		192
PR 5	WH	TB3/085-TB6/193(+)	193
	BK	TB3/086-TB6/194(-)	194
	SH		195
PR 6	WH	TB3/088-TB6/196(+)	196
	BK	TB3/089-TB6/197(-)	197
	SH		198
PR 7	WH	TB3/091-TB6/199(+)	199
	BK	TB3/092-TB6/200(-)	200
	SH		201
PR 8	WH	TB3/094-TB6/202(+)	202
	BK	TB3/095-TB6/203(-)	203
	SH		204
PR 9	WH	TB3/097-TB6/205(+)	205
	BK	TB3/098-TB6/206(-)	206
	SH		207
PR 10	WH	TB3/100-TB6/208(+)	208
	BK	TB3/101-TB6/209(-)	209
	SH		210
PR 11	WH	TB3/103-TB6/211(+)	211
	BK	TB3/104-TB6/212(-)	212
	SH		213
PR 12	WH	TB3/106-TB6/214(+)	214
	BK	TB3/107-TB6/215(-)	215
	SH		216

TB6/184-5_6/1 AOBV1340 ↪ SHT E-6167G
BK RTN1/012-TB6/185 ↪ SHT E-6172
24VDC(-) TB6/185-TB9/314 ↪ SHT E-6167C
TB6/211-5_11/2 ↪ SHT E-6167J
SC4010 TB6/212-5_11/2 ↪ SHT E-6167J
TB6/214-5_11/3 ↪ SHT E-6167J
SC4011 TB6/215-5_11/3 ↪ SHT E-6167J

GND

TB-5

GND

SHT E-6172 PB1/011-TB5/151 RD 24VDC(+)
SHT E-6167F TB5/152-5_3/2 ZSO1340
SHT E-6167F TB5/155-5_3/3 ZSC1340
SHT E-6167F TB5/176-5_3/10 FSL4010
SHT E-6167C TB5/178-TB9/289 24VCD(+)
SHT E-6167F TB5/179-5_3/11 FSL4011

145	WH	TB2/037-TB5/145(+)	PR 1
146	BK	TB2/038-TB5/146(-)	
147	SH		
148	WH	TB2/040-TB5/148(+)	PR 2
149	BK	TB2/041-TB5/149(-)	
150	SH		
151	WH	TB2/043-TB5/151(+)	PR 3
152	BK	TB2/044-TB5/152(-)	
153	SH		
154	WH	TB2/046-TB5/154(+)	PR 4
155	BK	TB2/047-TB5/155(-)	
156	SH		
157	WH	TB2/049-TB5/157(+)	PR 5
158	BK	TB2/050-TB5/158(-)	
159	SH		
160	WH	TB2/052-TB5/160(+)	PR 6
161	BK	TB2/053-TB5/161(-)	
162	SH		
163	WH	TB2/055-TB5/163(+)	PR 7
164	BK	TB2/056-TB5/164(-)	
165	SH		
166	WH	TB2/058-TB5/166(+)	PR 8
167	BK	TB2/059-TB5/167(-)	
168	SH		
169	WH	TB2/061-TB5/169(+)	PR 9
170	BK	TB2/062-TB5/170(-)	
171	SH		
172	WH	TB2/064-TB5/172(-)	PR 10
173	BK	TB2/065-TB5/173(-)	
174	SH		
175	WH	TB2/067-TB5/175(+)	PR 11
176	BK	TB2/068-TB5/176(-)	
177	SH		
178	WH	TB2/070-TB5/178(+)	PR 12
179	BK	TB2/071-TB5/179(-)	
180	SH		

GND

TB-7

GND

PR 1	WH	TB4/109-TB7/217(+)	217
	BK	TB4/110-TB7/218(-)	218
	SH		219
PR 2	WH	TB4/112-TB7/220(+)	220
	BK	TB4/113-TB7/221(-)	221
	SH		222
PR 3	WH	TB4/115-TB7/223(+)	223
	BK	TB4/116-TB7/224(-)	224
	SH		225
PR 4	WH	TB4/118-TB7/226(+)	226
	BK	TB4/119-TB7/227(-)	227
	SH		228
PR 5	WH	TB4/121-TB7/229(+)	229
	BK	TB4/122-TB7/230(-)	230
	SH		231
PR 6	WH	TB4/124-TB7/232(+)	232
	BK	TB4/125-TB7/233(-)	233
	SH		234
PR 7	WH	TB4/127-TB7/235(+)	235
	BK	TB4/128-TB7/236(-)	236
	SH		237
PR 8	WH	TB4/130-TB7/238(+)	238
	BK	TB4/131-TB7/239(-)	239
	SH		240
PR 9	WH	TB4/133-TB7/241(+)	241
	BK	TB4/134-TB7/242(-)	242
	SH		243
PR 10	WH	TB4/136-TB7/244(+)	244
	BK	TB4/137-TB7/245(-)	245
	SH		246
PR 11	WH	TB4/139-TB7/247(+)	247
	BK	TB4/140-TB7/248(-)	248
	SH		249
PR 12	WH	TB4/142-TB7/250(+)	250
	BK	TB4/143-TB7/251(-)	251
	SH		252

GND

105-CAB102/C2 12PR#18
105-CAB102/C1 12PR#18
105-CAB102/C3 12PR#18
105-CAB102/C4 12PR#18

TO WB-105
SEE SHEET E-6159

NO	DATE	CLASS REV	ADC	DESCRIPTION	DRN	DES	CHKD	SUB	APP

AECOM

RLWTF-UP LOW LEVEL WASTE SUBPROJECT

CAB-102 PANEL TERMINATION

TA-50 BLDG. 230

DRAWN	V DAVIDSON		
DESIGN	S MOORE		
CHECKED	G MOORE	DATE	5/8/14
SUBMITTED	MARK THEIN	APPROVED FOR RELEASE	ED ARTEAGA

Los Alamos NATIONAL LABORATORY
P.O. Box 1663 Los Alamos, New Mexico 87545

CLASSIFICATION		SHEET	E-6167B
PROJECT ID	100761	DRAWING NO	C55864
REVIEWER		DATE	399 OF 435
		REV	0

STATE OF NEW MEXICO ELOISE BRAND 23580 REGISTERED PROFESSIONAL ENGINEER

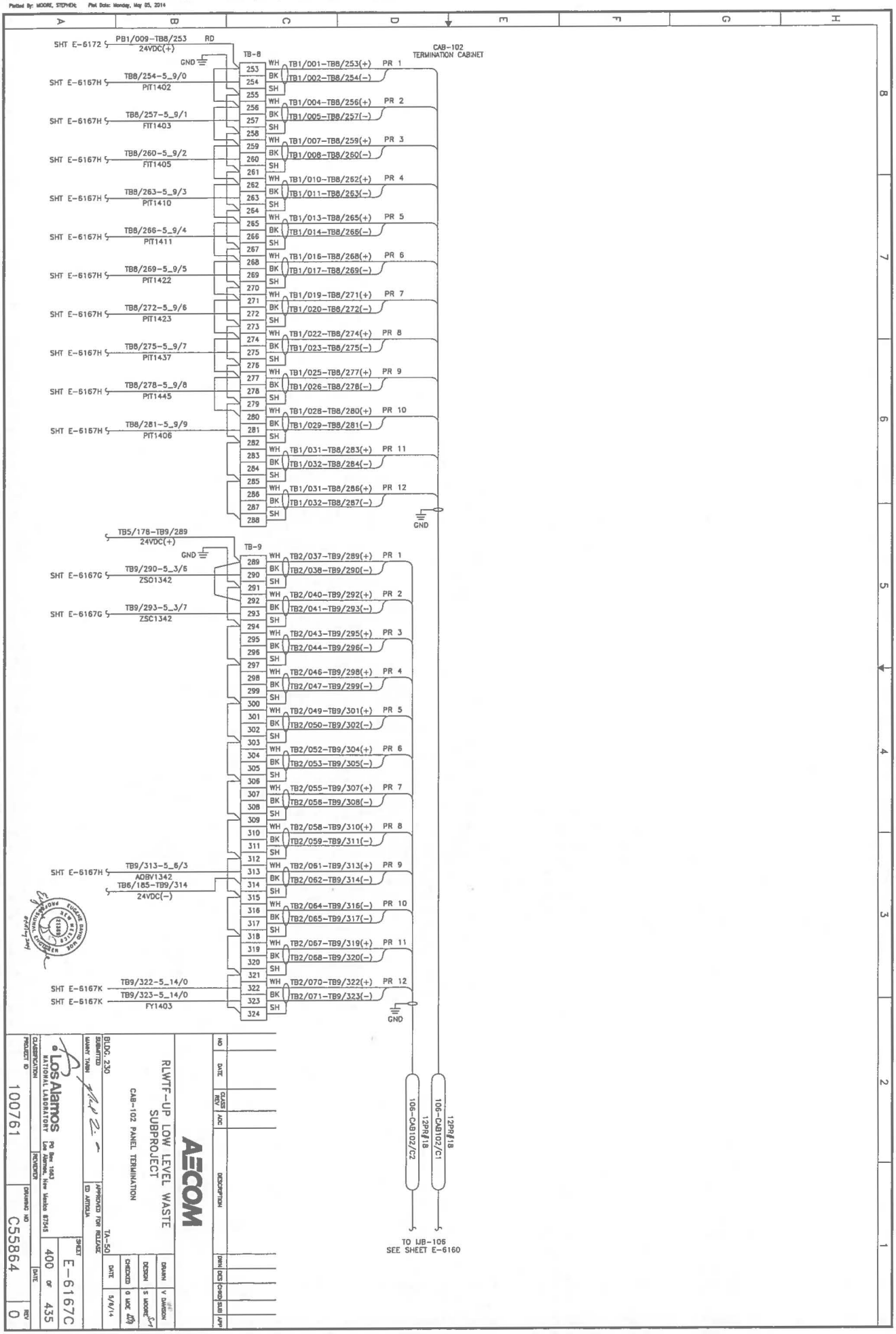

File Location: P:\RLWTF LOW-LEVEL WASTE FACILITY\500 CAD\C55864 MAIN BUILDING\SHEETS\16 ELECTRICAL\55864-E-6167C-R0.DWG
Plotted By: MOORE, STEPHEN Plot Date: Monday, May 05, 2014
CAB-102
TERMINATION CABINET
SHT E-6172
PB1/009-TB8/253
24VDC(+)
RD
GND
TB-8
SHT E-6167H
TB8/254-5_9/0
PIT1402
TB8/257-5_9/1
FIT1403
TB8/260-5_9/2
FIT1405
TB8/263-5_9/3
PIT1410
TB8/266-5_9/4
PIT1411
TB8/269-5_9/5
PIT1422
TB8/272-5_9/6
PIT1423
TB8/275-5_9/7
PIT1437
TB8/278-5_9/8
PIT1445
TB8/281-5_9/9
PIT1406
TB1/001-TB8/253(+) PR 1
TB1/002-TB8/254(-)
TB1/004-TB8/256(+) PR 2
TB1/005-TB8/257(-)
TB1/007-TB8/259(+) PR 3
TB1/008-TB8/260(-)
TB1/010-TB8/262(+) PR 4
TB1/011-TB8/263(-)
TB1/013-TB8/265(+) PR 5
TB1/014-TB8/266(-)
TB1/016-TB8/268(+) PR 6
TB1/017-TB8/269(-)
TB1/019-TB8/271(+) PR 7
TB1/020-TB8/272(-)
TB1/022-TB8/274(+) PR 8
TB1/023-TB8/275(-)
TB1/025-TB8/277(+) PR 9
TB1/026-TB8/278(-)
TB1/028-TB8/280(+) PR 10
TB1/029-TB8/281(-)
TB1/031-TB8/283(+) PR 11
TB1/032-TB8/284(-)
TB1/031-TB8/286(+) PR 12
TB1/032-TB8/287(-)
TB5/178-TB9/289
24VDC(+)
TB-9
SHT E-6167G
TB9/290-5_3/6
ZSO1342
TB9/293-5_3/7
ZSC1342
TB2/037-TB9/289(+) PR 1
TB2/038-TB9/290(-)
TB2/040-TB9/292(+) PR 2
TB2/041-TB9/293(-)
TB2/043-TB9/295(+) PR 3
TB2/044-TB9/296(-)
TB2/046-TB9/298(+) PR 4
TB2/047-TB9/299(-)
TB2/049-TB9/301(+) PR 5
TB2/050-TB9/302(-)
TB2/052-TB9/304(+) PR 6
TB2/053-TB9/305(-)
TB2/055-TB9/307(+) PR 7
TB2/056-TB9/308(-)
TB2/058-TB9/310(+) PR 8
TB2/059-TB9/311(-)
TB2/061-TB9/313(+) PR 9
TB2/062-TB9/314(-)
TB2/064-TB9/316(-) PR 10
TB2/065-TB9/317(-)
TB2/067-TB9/319(+) PR 11
TB2/068-TB9/320(-)
TB2/070-TB9/322(+) PR 12
TB2/071-TB9/323(-)
SHT E-6167H
TB9/313-5_6/3
AOBV1342
TB6/185-TB9/314
24VDC(-)
SHT E-6167K
TB9/322-5_14/0
TB9/323-5_14/0
FY1403
106-CAB102/C2
12PR#18
106-CAB102/C1
12PR#18
TO IJB-106
SEE SHEET E-6160
AECOM
RLWTF-UP LOW LEVEL WASTE SUBPROJECT
CAB-102 PANEL TERMINATION
BLDG. 230
TA-50
SUBMITTED
MANNY TABIN
APPROVED FOR RELEASE
ED ARTIGLIA
Los Alamos
NATIONAL LABORATORY
PO Box 1663
Los Alamos, New Mexico 87545
CLASSIFICATION
PROJECT ID
100761
DRAWING NO
C55864
REV
0
SHEET
E-6167C
400 OF 435
DATE
5/6/14
DRAWN V DAWSON
DESIGN S MOORE
CHECKED G MOE
DATE
DESCRIPTION
NO
DATE
CLASS REV
ADC
DRN
DES
CHKD
SUB
APP

File Location: P:\RLWTF LOW-LEVEL WASTE FACILITY\500 CAD\C55864 MAIN BUILDING\SHEETS\16 ELECTRICAL\55864-E-6167D-R0.DWG
Plotted By: MOORE, STEPHEN Plot Date: Monday, May 03, 2014

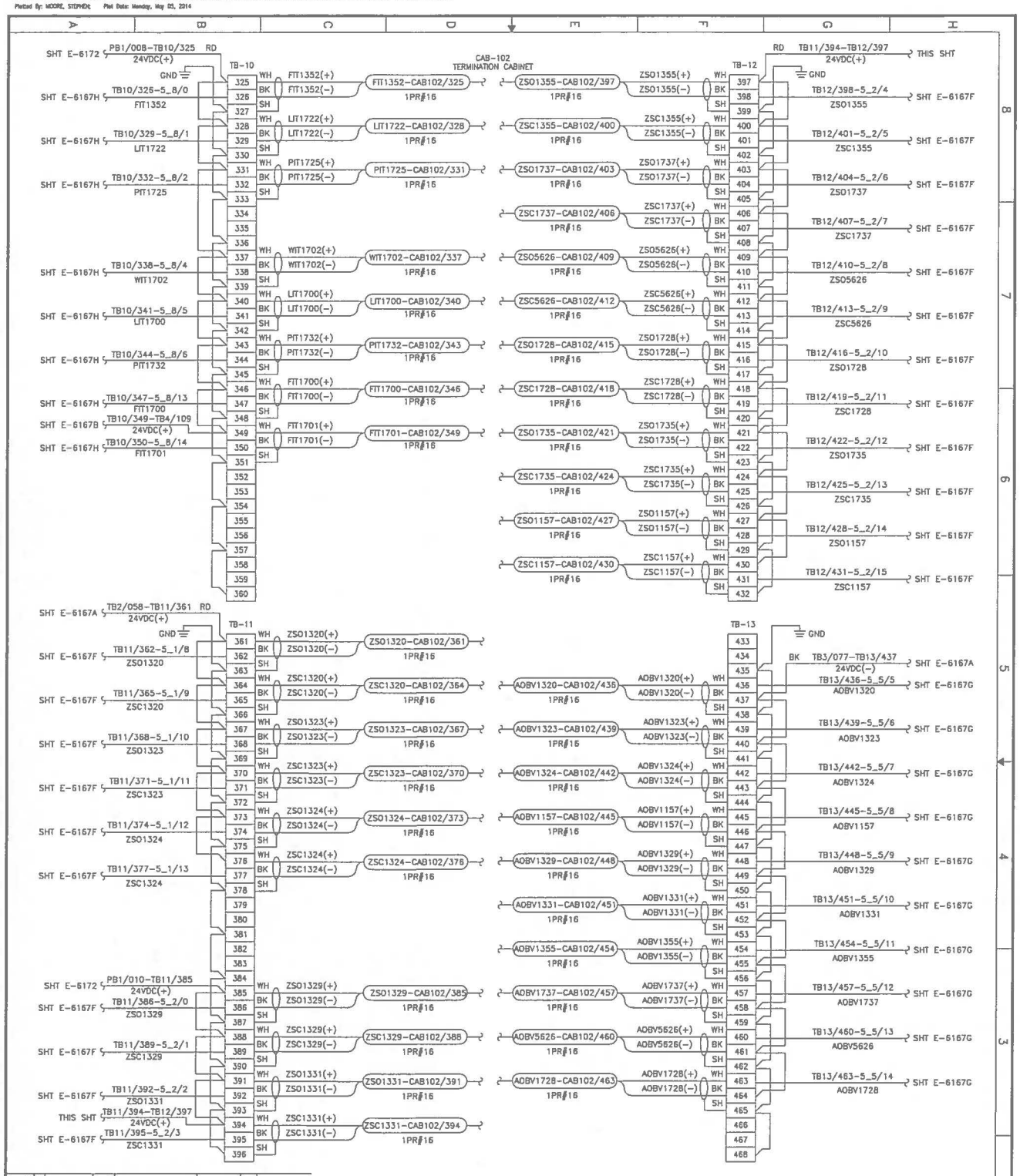

AECOM

RLWTF-UP LOW LEVEL WASTE SUBPROJECT

CAB-102 PANEL TERMINATION

BLDG. 230 TA-50

SUBMITTED MANNY TABIN

APPROVED FOR RELEASE ED ARTIGLIA

Los Alamos NATIONAL LABORATORY PO Box 1663 Los Alamos, New Mexico 87545

CLASSIFICATION

PROJECT ID 100761

REVIEWER

DRAWING NO C55864

SHEET E-6167D

401 OF 435

DATE 5/6/14

DRAWN V DAWSON

DESIGN S MOORE

CHECKED G MOE

DATE

REV 0

NO | DATE | CLASS REV | ADC | DESCRIPTION | DWN | DES | CHKD | SUB | APP

File Location: P:\RLWTF LOW-LEVEL WASTE FACILITY\500 CAD\C55864 MAIN BUILDING\SHEETS\18 ELECTRICAL\55864-E-6167E-R0.DWG
Plotted By: MOORE, STEPHEN Plot Date: Monday, May 05, 2014

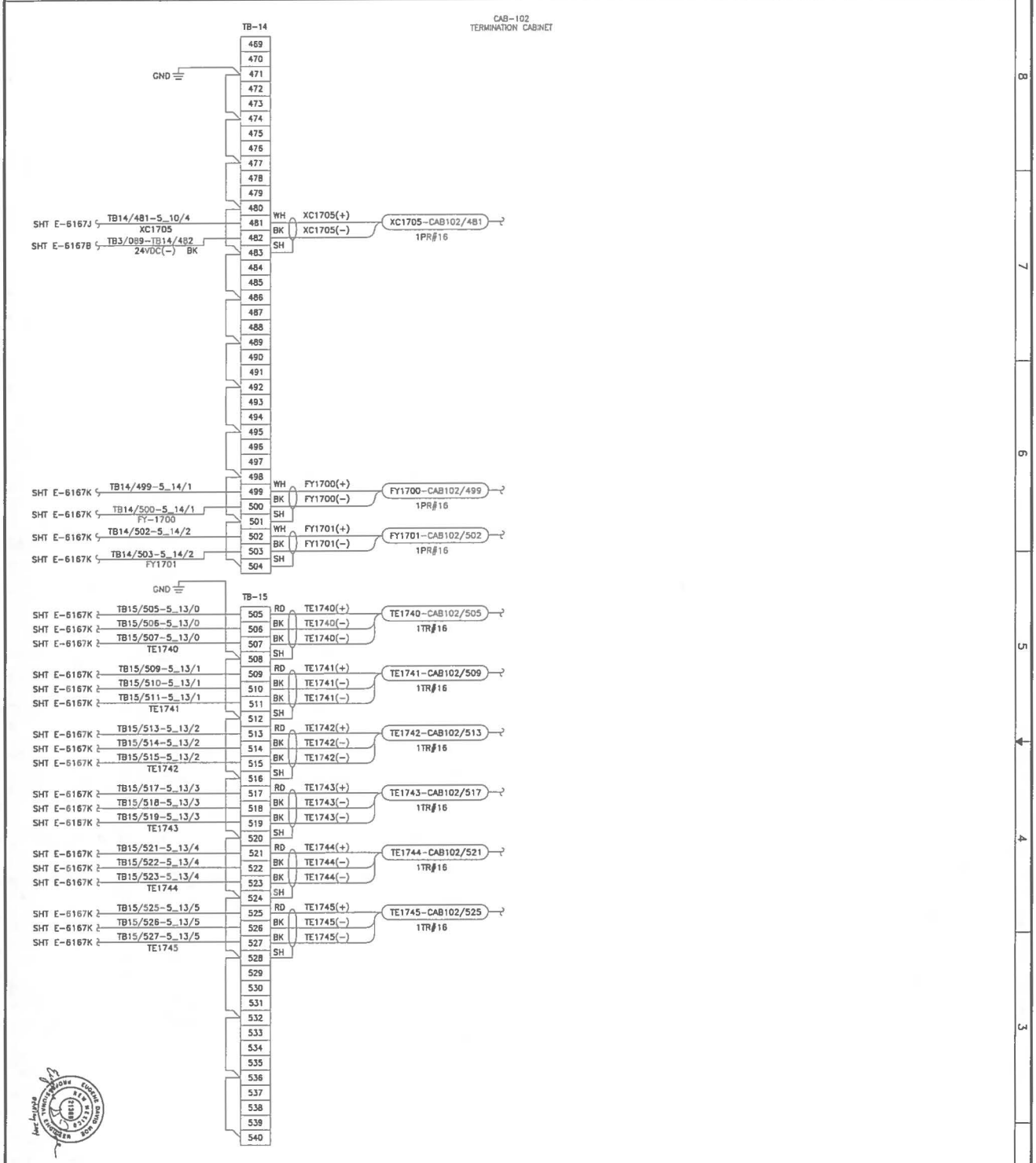

NO	DATE	CLASS REV	ADC	DESCRIPTION	DWN	DES	CHKD	SUB	APP

AECOM

RLWTF-UP LOW LEVEL WASTE SUBPROJECT

CAB-102 PANEL TERMINATION

BLDG. 230 TA-50

SUBMITTED MANNY TAHIN

APPROVED FOR RELEASE ED ARTIGLIA

DRAWN V DAVIDSON
DESIGN S MOORE
CHECKED G MOE
DATE 5/8/14

Los Alamos NATIONAL LABORATORY PO Box 1663 Los Alamos, New Mexico 87545

CLASSIFICATION
PROJECT ID 100761
REVIEWER
DRAWING NO C55864
SHEET E-6167E
402 OF 435
DATE
REV 0

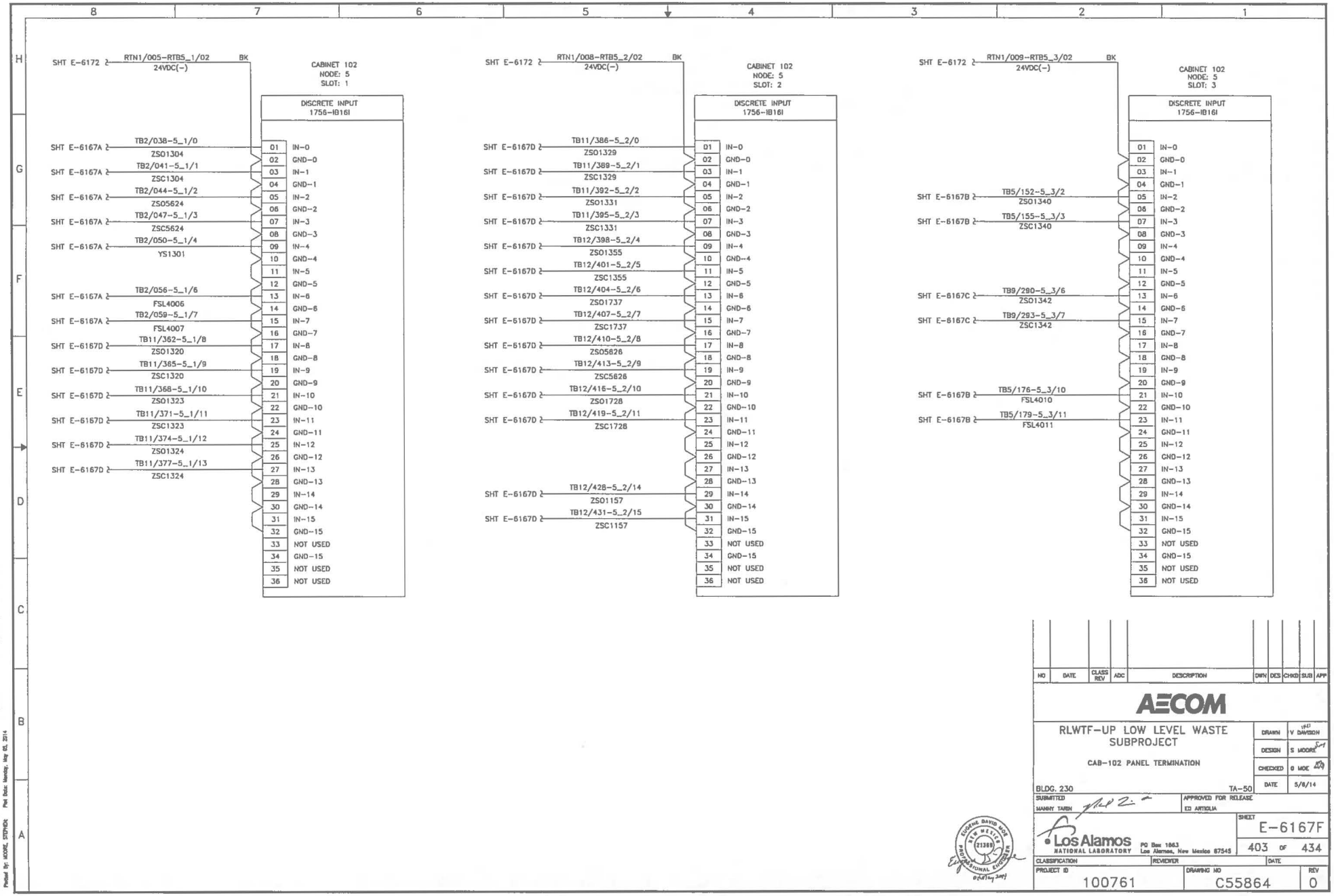
SHT E-6172
RTN1/005-RTB5_1/02
24VDC(-)
BK
CABINET 102
NODE: 5
SLOT: 1
DISCRETE INPUT
1756-IB16I
SHT E-6167A
TB2/038-5_1/0
ZSO1304
TB2/041-5_1/1
ZSC1304
TB2/044-5_1/2
ZSO5624
TB2/047-5_1/3
ZSC5624
TB2/050-5_1/4
YS1301
TB2/056-5_1/6
FSL4006
TB2/059-5_1/7
FSL4007
SHT E-6167D
TB11/362-5_1/8
ZSO1320
TB11/365-5_1/9
ZSC1320
TB11/368-5_1/10
ZSO1323
TB11/371-5_1/11
ZSC1323
TB11/374-5_1/12
ZSO1324
TB11/377-5_1/13
ZSC1324
01 IN-0
02 GND-0
03 IN-1
04 GND-1
05 IN-2
06 GND-2
07 IN-3
08 GND-3
09 IN-4
10 GND-4
11 IN-5
12 GND-5
13 IN-6
14 GND-6
15 IN-7
16 GND-7
17 IN-8
18 GND-8
19 IN-9
20 GND-9
21 IN-10
22 GND-10
23 IN-11
24 GND-11
25 IN-12
26 GND-12
27 IN-13
28 GND-13
29 IN-14
30 GND-14
31 IN-15
32 GND-15
33 NOT USED
34 GND-15
35 NOT USED
36 NOT USED
SHT E-6172
RTN1/008-RTB5_2/02
24VDC(-)
BK
CABINET 102
NODE: 5
SLOT: 2
DISCRETE INPUT
1756-IB16I
SHT E-6167D
TB11/386-5_2/0
ZSO1329
TB11/389-5_2/1
ZSC1329
TB11/392-5_2/2
ZSO1331
TB11/395-5_2/3
ZSC1331
TB12/398-5_2/4
ZSO1355
TB12/401-5_2/5
ZSC1355
TB12/404-5_2/6
ZSO1737
TB12/407-5_2/7
ZSC1737
TB12/410-5_2/8
ZSO5626
TB12/413-5_2/9
ZSC5626
TB12/416-5_2/10
ZSO1728
TB12/419-5_2/11
ZSC1728
TB12/428-5_2/14
ZSO1157
TB12/431-5_2/15
ZSC1157
01 IN-0
02 GND-0
03 IN-1
04 GND-1
05 IN-2
06 GND-2
07 IN-3
08 GND-3
09 IN-4
10 GND-4
11 IN-5
12 GND-5
13 IN-6
14 GND-6
15 IN-7
16 GND-7
17 IN-8
18 GND-8
19 IN-9
20 GND-9
21 IN-10
22 GND-10
23 IN-11
24 GND-11
25 IN-12
26 GND-12
27 IN-13
28 GND-13
29 IN-14
30 GND-14
31 IN-15
32 GND-15
33 NOT USED
34 GND-15
35 NOT USED
36 NOT USED
SHT E-6172
RTN1/009-RTB5_3/02
24VDC(-)
BK
CABINET 102
NODE: 5
SLOT: 3
DISCRETE INPUT
1756-IB16I
SHT E-6167B
TB5/152-5_3/2
ZSO1340
TB5/155-5_3/3
ZSC1340
SHT E-6167C
TB9/290-5_3/6
ZSO1342
TB9/293-5_3/7
ZSC1342
SHT E-6167B
TB5/176-5_3/10
FSL4010
TB5/179-5_3/11
FSL4011
01 IN-0
02 GND-0
03 IN-1
04 GND-1
05 IN-2
06 GND-2
07 IN-3
08 GND-3
09 IN-4
10 GND-4
11 IN-5
12 GND-5
13 IN-6
14 GND-6
15 IN-7
16 GND-7
17 IN-8
18 GND-8
19 IN-9
20 GND-9
21 IN-10
22 GND-10
23 IN-11
24 GND-11
25 IN-12
26 GND-12
27 IN-13
28 GND-13
29 IN-14
30 GND-14
31 IN-15
32 GND-15
33 NOT USED
34 GND-15
35 NOT USED
36 NOT USED
NO DATE CLASS REV ADC DESCRIPTION DWN DES CHKD SUB APP
AECOM
RLWTF-UP LOW LEVEL WASTE SUBPROJECT
CAB-102 PANEL TERMINATION
DRAWN V DAWSON
DESIGN S MOORE
CHECKED G MOE
DATE 5/8/14
BLDG. 230 TA-50
SUBMITTED MANNY TARIN
APPROVED FOR RELEASE ED ARTIGLIA
Los Alamos NATIONAL LABORATORY PO Box 1663 Los Alamos, New Mexico 87545
SHEET E-6167F
403 OF 434
CLASSIFICATION REVIEWER DATE
PROJECT ID 100761
DRAWING NO C55864
REV 0
EUGENE DAVID MOE NEW MEXICO 21369 PROFESSIONAL ENGINEER
File Location: P:\RLWTF LOW-LEVEL WASTE FACILITY\300 CAD\C55864 MAIN BUILDING\SHEETS\10 ELECTRICAL\55864-E-6167F-RS.DWG
Plotted By: MOE, EUGENE Plot Date: Monday, May 05, 2014
12154

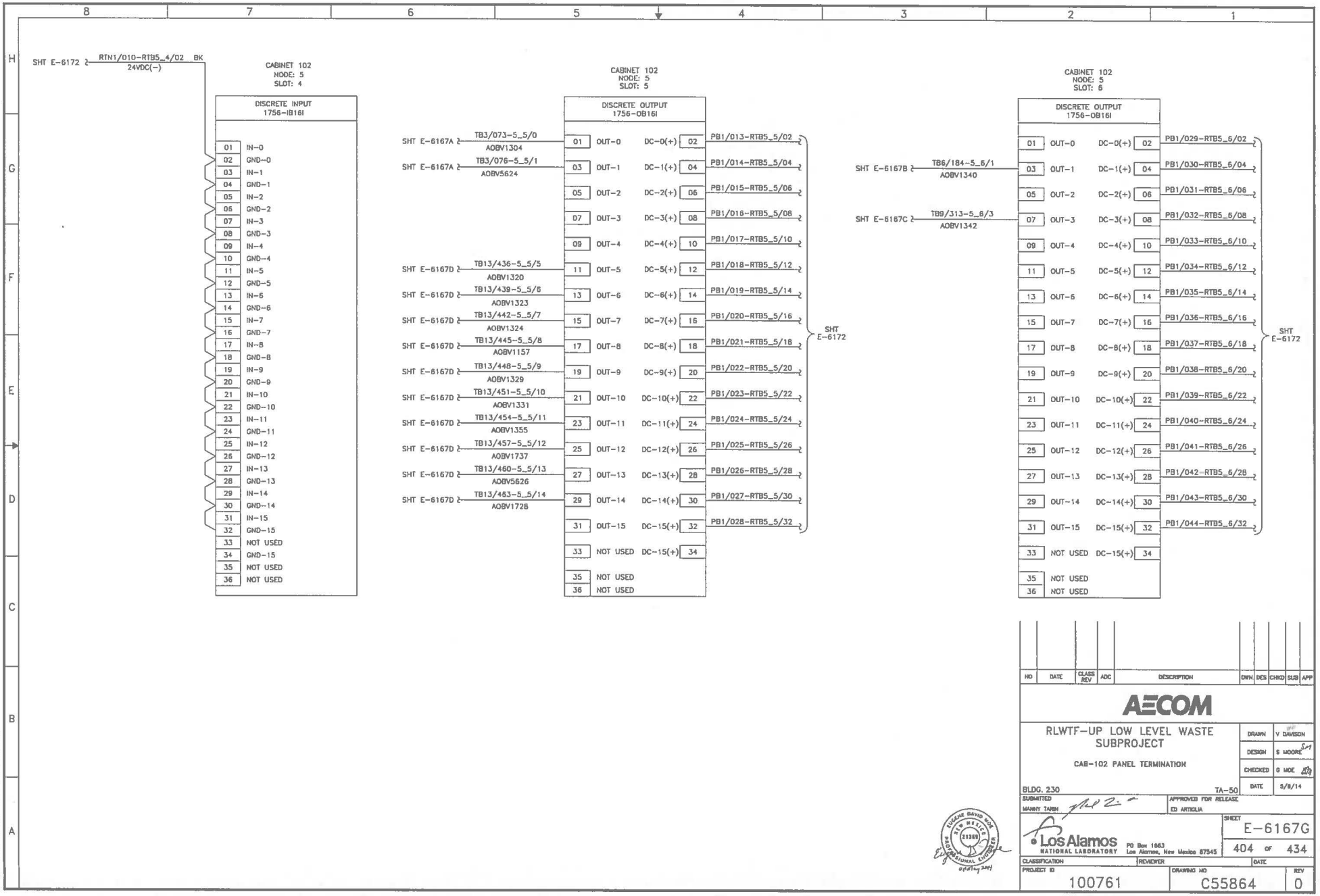
SHT E-6172
RTN1/010-RTB5_4/02 BK
24VDC(-)
CABINET 102
NODE: 5
SLOT: 4
DISCRETE INPUT
1756-IB16I
01 IN-0
02 GND-0
03 IN-1
04 GND-1
05 IN-2
06 GND-2
07 IN-3
08 GND-3
09 IN-4
10 GND-4
11 IN-5
12 GND-5
13 IN-6
14 GND-6
15 IN-7
16 GND-7
17 IN-8
18 GND-8
19 IN-9
20 GND-9
21 IN-10
22 GND-10
23 IN-11
24 GND-11
25 IN-12
26 GND-12
27 IN-13
28 GND-13
29 IN-14
30 GND-14
31 IN-15
32 GND-15
33 NOT USED
34 GND-15
35 NOT USED
36 NOT USED
CABINET 102
NODE: 5
SLOT: 5
DISCRETE OUTPUT
1756-OB16I
SHT E-6167A TB3/073-5_5/0 AOBV1304
SHT E-6167A TB3/076-5_5/1 AOBV5624
SHT E-6167D TB13/436-5_5/5 AOBV1320
SHT E-6167D TB13/439-5_5/6 AOBV1323
SHT E-6167D TB13/442-5_5/7 AOBV1324
SHT E-6167D TB13/445-5_5/8 AOBV1157
SHT E-6167D TB13/448-5_5/9 AOBV1329
SHT E-6167D TB13/451-5_5/10 AOBV1331
SHT E-6167D TB13/454-5_5/11 AOBV1355
SHT E-6167D TB13/457-5_5/12 AOBV1737
SHT E-6167D TB13/460-5_5/13 AOBV5626
SHT E-6167D TB13/463-5_5/14 AOBV1728
01 OUT-0 DC-0(+) 02 PB1/013-RTB5_5/02
03 OUT-1 DC-1(+) 04 PB1/014-RTB5_5/04
05 OUT-2 DC-2(+) 06 PB1/015-RTB5_5/06
07 OUT-3 DC-3(+) 08 PB1/016-RTB5_5/08
09 OUT-4 DC-4(+) 10 PB1/017-RTB5_5/10
11 OUT-5 DC-5(+) 12 PB1/018-RTB5_5/12
13 OUT-6 DC-6(+) 14 PB1/019-RTB5_5/14
15 OUT-7 DC-7(+) 16 PB1/020-RTB5_5/16
17 OUT-8 DC-8(+) 18 PB1/021-RTB5_5/18
19 OUT-9 DC-9(+) 20 PB1/022-RTB5_5/20
21 OUT-10 DC-10(+) 22 PB1/023-RTB5_5/22
23 OUT-11 DC-11(+) 24 PB1/024-RTB5_5/24
25 OUT-12 DC-12(+) 26 PB1/025-RTB5_5/26
27 OUT-13 DC-13(+) 28 PB1/026-RTB5_5/28
29 OUT-14 DC-14(+) 30 PB1/027-RTB5_5/30
31 OUT-15 DC-15(+) 32 PB1/028-RTB5_5/32
33 NOT USED DC-15(+) 34
35 NOT USED
36 NOT USED
SHT E-6172
CABINET 102
NODE: 5
SLOT: 6
DISCRETE OUTPUT
1756-OB16I
SHT E-6167B TB6/184-5_6/1 AOBV1340
SHT E-6167C TB9/313-5_6/3 AOBV1342
01 OUT-0 DC-0(+) 02 PB1/029-RTB5_6/02
03 OUT-1 DC-1(+) 04 PB1/030-RTB5_6/04
05 OUT-2 DC-2(+) 06 PB1/031-RTB5_6/06
07 OUT-3 DC-3(+) 08 PB1/032-RTB5_6/08
09 OUT-4 DC-4(+) 10 PB1/033-RTB5_6/10
11 OUT-5 DC-5(+) 12 PB1/034-RTB5_6/12
13 OUT-6 DC-6(+) 14 PB1/035-RTB5_6/14
15 OUT-7 DC-7(+) 16 PB1/036-RTB5_6/16
17 OUT-8 DC-8(+) 18 PB1/037-RTB5_6/18
19 OUT-9 DC-9(+) 20 PB1/038-RTB5_6/20
21 OUT-10 DC-10(+) 22 PB1/039-RTB5_6/22
23 OUT-11 DC-11(+) 24 PB1/040-RTB5_6/24
25 OUT-12 DC-12(+) 26 PB1/041-RTB5_6/26
27 OUT-13 DC-13(+) 28 PB1/042-RTB5_6/28
29 OUT-14 DC-14(+) 30 PB1/043-RTB5_6/30
31 OUT-15 DC-15(+) 32 PB1/044-RTB5_6/32
33 NOT USED DC-15(+) 34
35 NOT USED
36 NOT USED
SHT E-6172
NO DATE CLASS REV ADC DESCRIPTION DWN DES CHKD SUB APP
AECOM
RLWTF-UP LOW LEVEL WASTE SUBPROJECT
CAB-102 PANEL TERMINATION
DRAWN V DAVISON
DESIGN S MOORE
CHECKED G MOE
DATE 5/8/14
BLDG. 230 TA-50
SUBMITTED MANNY TARIN
APPROVED FOR RELEASE ED ARTIGLIA
Los Alamos NATIONAL LABORATORY PO Box 1663 Los Alamos, New Mexico 87545
SHEET E-6167G
404 OF 434
CLASSIFICATION REVIEWER DATE
PROJECT ID 100761
DRAWING NO C55864
REV 0
EUGENE DAVID MOE 21389 NEW MEXICO PROFESSIONAL ENGINEER 05/07/2014
File Location: P:\RLWTF LOW-LEVEL WASTE FACILITY\300 CAD\C55864 MAIN BUILDING\SHEETS\16 ELECTRICAL\55864-E-6167G-R0.DWG
Plotted By: MOORE, STEPHEN Plot Date: Monday, May 05, 2014
12155

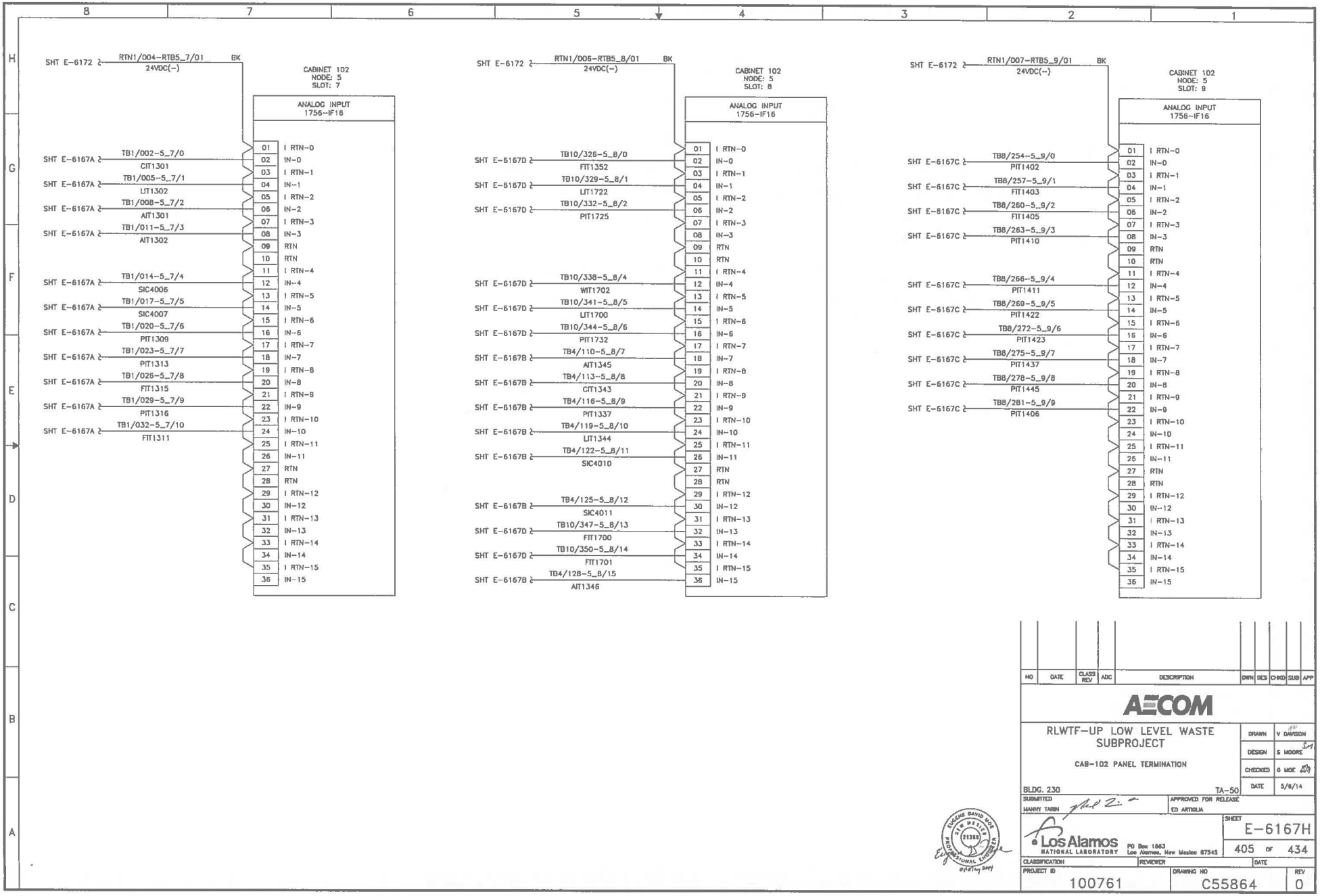

NO	DATE	CLASS REV	ADC	DESCRIPTION	DWN	DES	CHKD	SUB	APP

AECOM

RLWTF-UP LOW LEVEL WASTE SUBPROJECT

CAB-102 PANEL TERMINATION

DRAWN	V DAVISON
DESIGN	S MOORE
CHECKED	G MOE
DATE	5/8/14

BLDG. 230 TA-50

SUBMITTED MANNY TARIN

APPROVED FOR RELEASE ED ARTIGLIA

Los Alamos NATIONAL LABORATORY PO Box 1663 Los Alamos, New Mexico 87545

SHEET E-6167H

405 OF 434

CLASSIFICATION REVIEWER DATE

PROJECT ID 100761 DRAWING NO C55864 REV 0

EUGENE DAVID MOE NEW MEXICO 21269 PROFESSIONAL ENGINEER 6/21/2014

File Location: P:\RLWTF LOW-LEVEL WASTE FACILITY\500 CAD\C55864 MAIN BUILDING\SHEETS\10 ELECTRICAL\55864-E-6167H-R0.DWG
Plotted By: MOORE, STEPHEN Plot Date: Monday, May 12, 2014

95421 : 12156

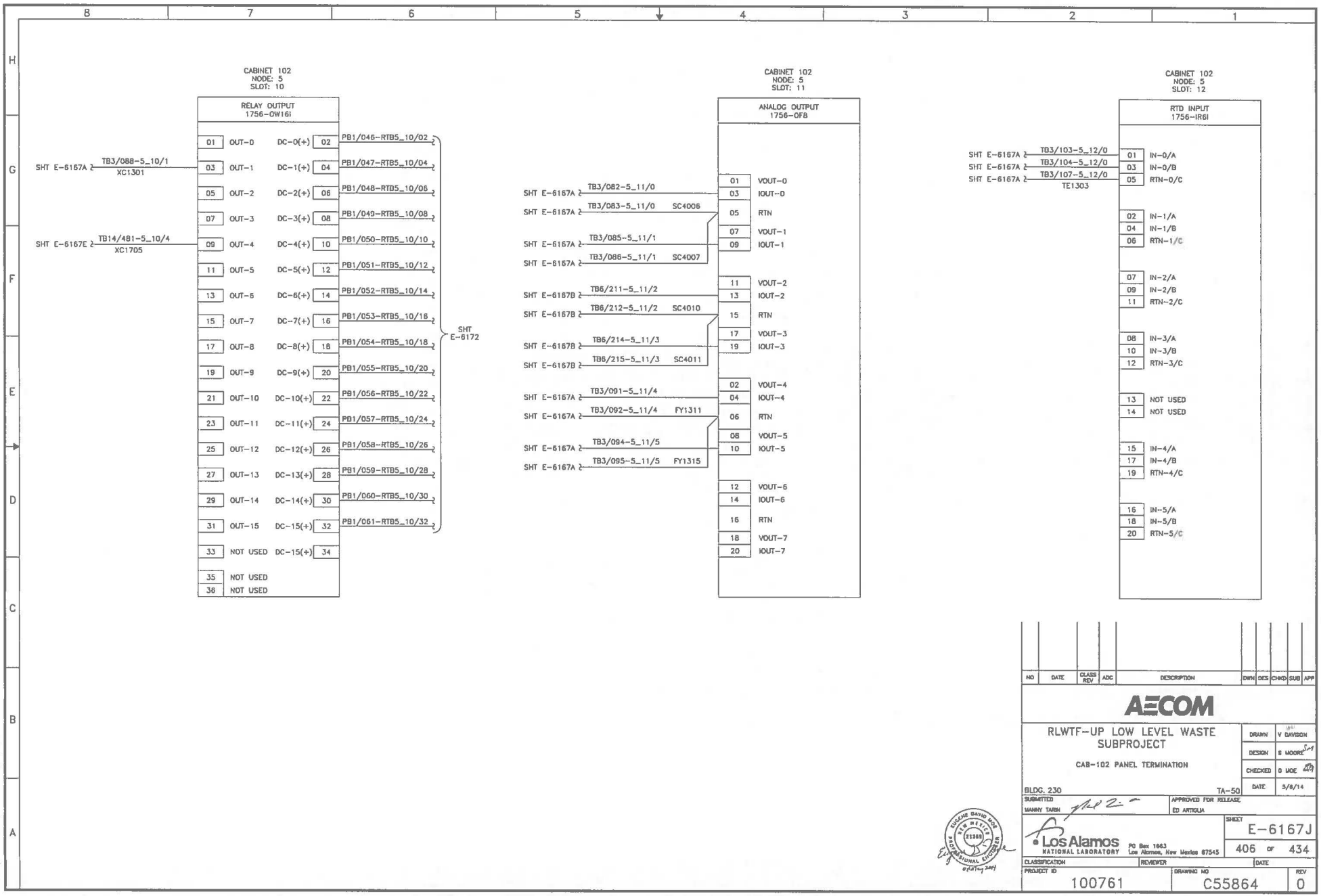

NO	DATE	CLASS REV	ADC	DESCRIPTION	DWN	DES	CHKD	SUB	APP

AECOM

RLWTF-UP LOW LEVEL WASTE SUBPROJECT

CAB-102 PANEL TERMINATION

DRAWN	V DAVISON
DESIGN	S MOORE
CHECKED	D MOE
DATE	5/8/14

BLDG. 230 TA-50

SUBMITTED MANNY TARIN

APPROVED FOR RELEASE ED ARTIGUA

Los Alamos NATIONAL LABORATORY PO Box 1663 Los Alamos, New Mexico 87545

SHEET E-6167J

406 OF 434

CLASSIFICATION REVIEWER DATE

PROJECT ID 100761 DRAWING NO C55864 REV 0

EUGENE DAVID MOE NEW MEXICO 21369 PROFESSIONAL ENGINEER

File Location: P:\RLWTF LOW-LEVEL WASTE FACILITY\300 CAD\C55864 MAIN BUILDING\SHEETS\18 ELECTRICAL\55864-E-6167J-R0.DWG
Plotted By: MOORE, STEVEN Plot Date: Monday, May 05, 2014

E-6167J

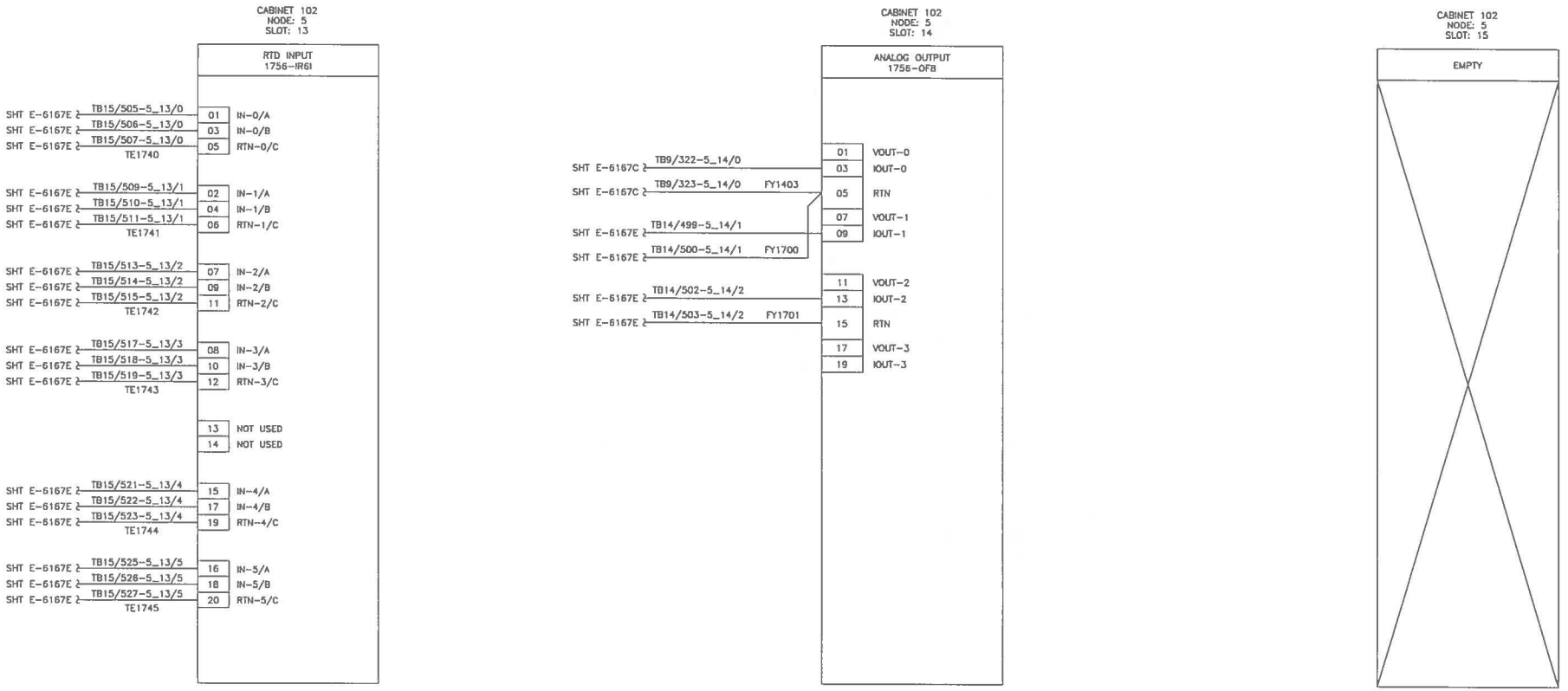

NO	DATE	CLASS REV	ADC	DESCRIPTION	DWN	DES	CHKD	SUB	APP

AECOM

RLWTF-UP LOW LEVEL WASTE SUBPROJECT

CAB-102 PANEL TERMINATION

BLDG. 230 TA-50

DRAWN	V DAVISON
DESIGN	S MOORE
CHECKED	G MOE
DATE	5/8/14

SUBMITTED MANNY TARIN

APPROVED FOR RELEASE ED ARTIGLIA

Los Alamos NATIONAL LABORATORY PO Box 1663 Los Alamos, New Mexico 87545

SHEET E-6167K

407 OF 434

CLASSIFICATION REVIEWER DATE

PROJECT ID 100761

DRAWING NO C55864

REV 0

EDGAR DAVID MOE NEW MEXICO 21369 REGISTERED PROFESSIONAL ENGINEER

File Location: P:\RLWTF LOW-LEVEL WASTE FACILITY\300 CAD\C55864 MAIN BUILDING\SHEETS\18 ELECTRICAL\A55864-E-6167K-R0.DWG
Plotted By: MOORE, STEVEN Plot Date: Monday, May 05, 2014

85n27

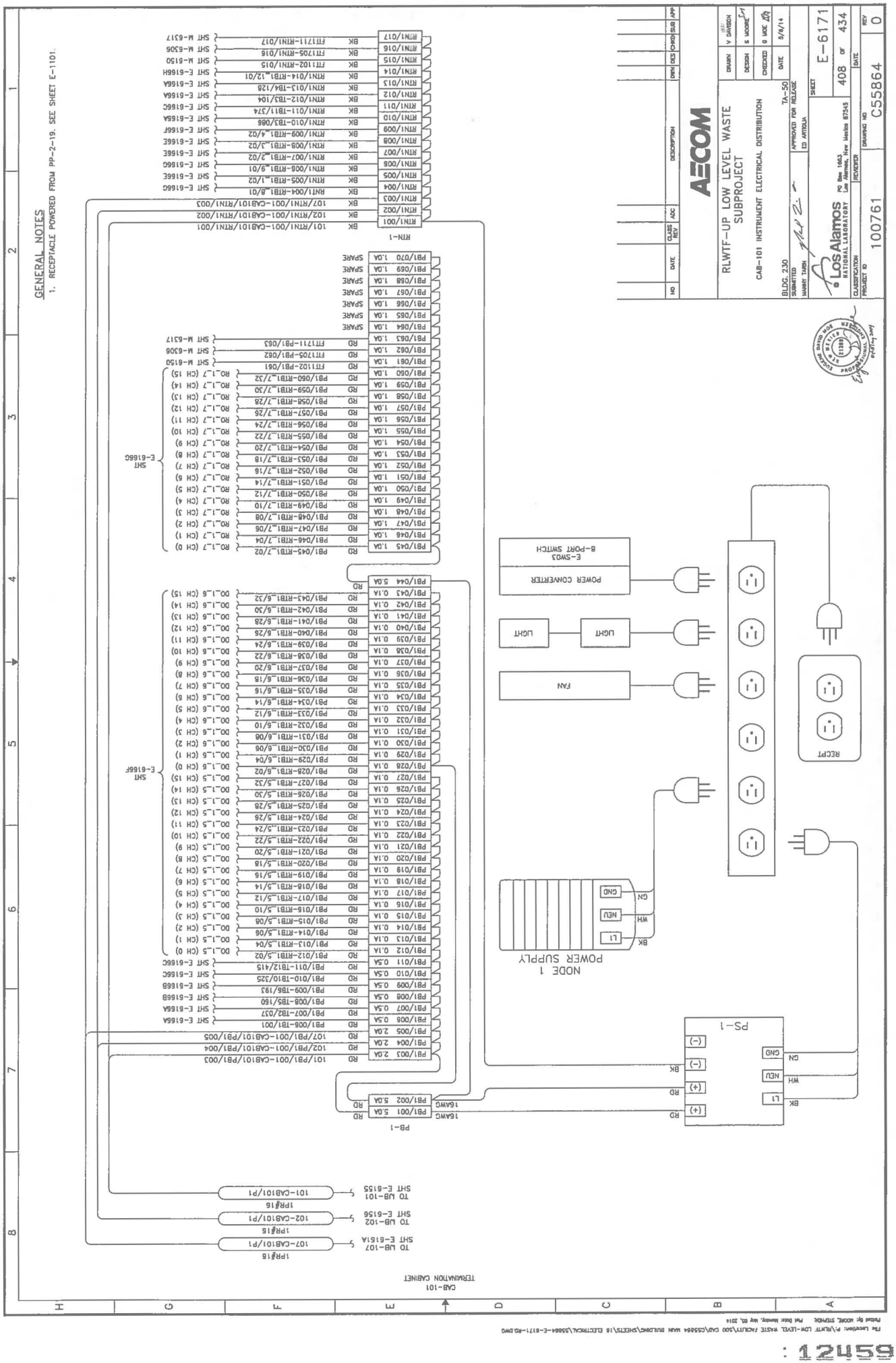

File Location: P:\RLWTF LOW-LEVEL WASTE FACILITY\500 CAD\C55864 WAN BUILDING\SHEETS\18 ELECTRICAL\55864-E-6171-RD.DWG
Plotted By: MOORE, STEPHEN PM Date: Monday, May 05, 2014

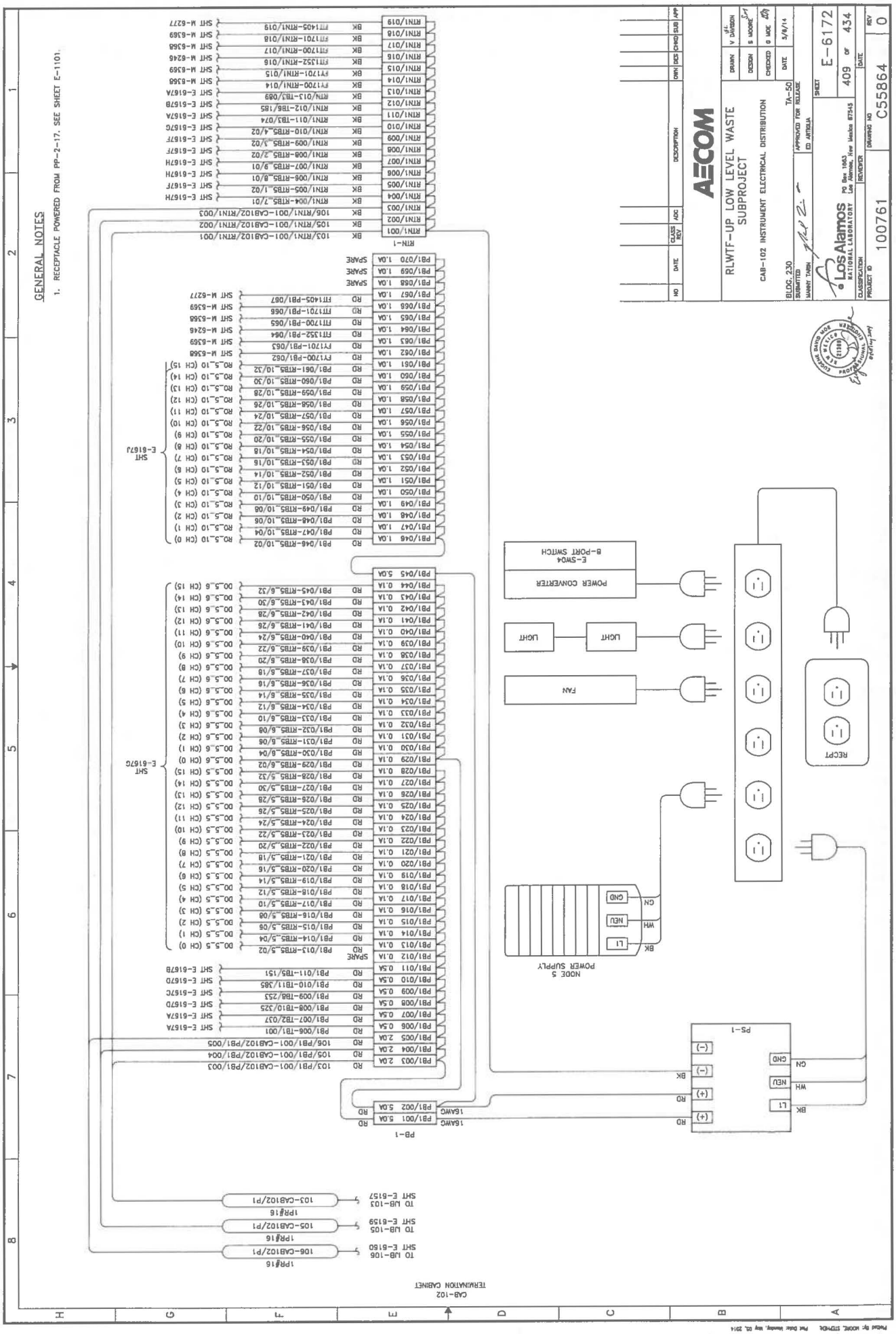

File Location: P:\RLWTF LOW-LEVEL WASTE FACILITY\500 CAD\C55864 WAM BUILDING\SHEETS\18 ELECTRICAL\55864-E-6172-R0.DWG
Plotted By: MOORE, STEPHEN Plot Date: Monday, May 05, 2014

File Location: P:\RLWTF LOW-LEVEL WASTE FACILITY\300 CAD\C55864 MAIN BUILDING\SHEETS\18 ELECTRICAL\55864-E-6178-RD.DWG
Plotted By: MOORE, STEPHEN Plot Date: Monday, May 05, 2014

CAB-100
TERMINATION CABINET

PS-1
BK L1
WH NEU
GN GND
(+) RD
(+) RD
(-) BK
(-)

PB-1
16AWG PB1/001 5.0A RD
16AWG PB1/002 5.0A RD
PB1/003 2.0A SPARE
PB1/004 0.5A RD PB1/004-GWY1/(+)
PB1/005 0.5A RD PB1/005-TB1/001 } SHT E-6165A
PB1/006 0.5A RD PB1/006-TB2/037 } SHT E-6165A
PB1/007 0.5A RD PB1/007-TB3/073 } SHT E-6165A
PB1/008 0.5A RD PB1/008-FC1/(+)
PB1/009 0.5A SPARE
PB1/010 0.5A SPARE
PB1/011 1.0A RD PB1/011-RTB3_4/02 } DO_3_4 (CH 0)
PB1/012 1.0A RD PB1/012-RTB3_4/04 } DO_3_4 (CH 1)
PB1/013 1.0A RD PB1/013-RTB3_4/06 } DO_3_4 (CH 2)
PB1/014 1.0A RD PB1/014-RTB3_4/08 } DO_3_4 (CH 3)
PB1/015 1.0A RD PB1/015-RTB3_4/10 } DO_3_4 (CH 4)
PB1/016 1.0A RD PB1/016-RTB3_4/12 } DO_3_4 (CH 5)
PB1/017 1.0A RD PB1/017-RTB3_4/14 } DO_3_4 (CH 6)
PB1/018 1.0A RD PB1/018-RTB3_4/16 } DO_3_4 (CH 7)
PB1/019 1.0A RD PB1/019-RTB3_4/18 } DO_3_4 (CH 8)
PB1/020 1.0A RD PB1/020-RTB3_4/20 } DO_3_4 (CH 9)
PB1/021 1.0A RD PB1/021-RTB3_4/22 } DO_3_4 (CH 10)
PB1/022 1.0A RD PB1/022-RTB3_4/24 } DO_3_4 (CH 11)
PB1/023 1.0A RD PB1/023-RTB3_4/26 } DO_3_4 (CH 12)
PB1/024 1.0A RD PB1/024-RTB3_4/28 } DO_3_4 (CH 013)
PB1/025 1.0A RD PB1/025-RTB3_4/30 } DO_3_4 (CH 014)
PB1/026 1.0A RD PB1/026-RTB3_4/32 } DO_3_4 (CH 015)
PB1/027 1.0A LSH5704-PB1/027 } SHT M-6406
PB1/028 1.0A LSH5705-PB1/028 } SHT M-6407
PB1/029 1.0A LSH5710-PB1/029 } SHT M-6408
PB1/030 1.0A SPARE
} SHT E-6165B

RTN-1
16AWG RTN1/001 BK RTN1/001-RTB3_3/02 } SHT E-6165B
RTN1/002 BK RTN1/002-RTB3_5/01 } SHT E-6165B
RTN1/003 BK RTN1/003-RTB3_6/02 } SHT E-6165C
RTN1/004 SPARE
RTN1/005 BK RTN1/005-FC1/(-)
RTN1/006 SPARE
RTN1/007 BK RTN1/007-GWY1/(-)
RTN1/008 LSH5704-RTN1/008 } SHT M-6406
RTN1/009 LSH5705-RTN1/009 } SHT M-6407
RTN1/010 LSH5710-RTN1/010 } SHT M-6408

MODE 3
POWER SUPPLY
BK L1
WH NEU
GN GND

GWY-01
DATA STATION
(-) BK
(+) RD

FC-01
MEDIA CONVERTER
(-) BK
(+) RD

FANS
HMI SERVER
SASS SERVER
BAS SERVER
MONITOR/
KEYBOARD
8V DC
1A
8-PORT CAT5
KVM SWITCH
E-SW01
24-PORT SWITCH
E-SW02
24-PORT SWITCH
RECPT

GENERAL NOTES
1. RECEPTACLE POWERED FROM PP-1-15. SEE SHEET E-1102.

NO	DATE	CLASS REV	ADC	DESCRIPTION	DWN	DES	CHKD	SUP	APP

AECOM

RLWTF-UP LOW LEVEL WASTE SUBPROJECT
CAB-100 INSTRUMENT ELECTRICAL DISTRIBUTION
BLDG. 230 TA-50

DRAWN	DESIGN	CHECKED	APPROVED FOR RELEASE
V DAWSON	S MOORE	G SAGE	ED ARTEGA
		5/9/14	

SUBMITTED MANNY TABIN

Los Alamos NATIONAL LABORATORY
PO Box 1663, Los Alamos, New Mexico 87545

CLASSIFICATION
PROJECT ID 100761
PROPERTY
DRAWING NO C55864 REV 0
SHEET E-6176
DATE
410 OF 434

PANEL: LP-A
LOCATION: TA-50-230 ROOM 1014
FED FROM:
DC DEVICE TYPE: Breaker
DEVICE FAMILY: Bolt On
ENCLOSURE: NEMA 1
MOUNTING: Surface
VOLTAGE: 480/277
MAINS(A): MLO
WIRING: 3-Phase 4-Wire
CONTINUOUS(A): 225
BUS SC RATING(A) 22000
FAULT CURRENT(A): 15304

DC AMPS P	NOTES	DESCRIPTION	DEMAND CODE	VA	CKT	PHASE LOADS VA A	B	C	CKT	VA	DEMAND CODE	DESCRIPTION	NOTES	DC AMPS P
20 1		RM 1000C,03,05,06	LTS	372	1	1740			2	1368	LTS	RM 1012		20 1
20 1		RM 1001,09,10	LTS	1024	3		1498		4	474	LTS	RM 1000A,00B,02,14		20 1
20 1		RM 1011	LTS	3120	5			3344	6	224	LTS	RM 1016,18		20 1
20 1		SPARE	SPARE	0	7	390			8	390	LTS	STREET & YARD	VIA LC-A	20 1
20 1	VIA LC-A	EXT	LTS	182	9		650		10	468	LTS	STREET & YARD	VIA LC-A	20 1
(1) 20 3	RM 1018	PV-5002	GEN	2106	11			7645	12	5567	GEN	.PS-5000/5001		(1) 30 3
"		"		2106	13	7645			14	5567		"		"
"		"		2106	15		7645		16	5567		"		"
(1) 30 3	RM 1018	.PV-5001A/B/C	GEN	4900	17			4900	18	0	SPARE	SPARE		20 1
"		"		4900	19	4900			20	0	SPARE	SPARE		20 1
"		"		4900	21		4900		22	0	SPARE	SPARE		20 1
20 1		SPARE	SPARE	0	23			0	24	0	SPARE	SPARE		20 1
20 1		SPARE	SPARE	0	25	0			26	0	SPARE	SPARE		20 1
					27				28					
					29				30					
					31				32					
					33				34					
					35				36					
					37				38					
					39				40					
					41				42					

ALL CONNECTED	KVA	MAX PH AMPS	* PHASE TOTALS	VA	AMPS	BUS TOTALS	KVA
TOTAL CONNECTED	44.56	56.2	* A-N	14484.4	52.3	CONNECTED	44.56
TOTAL DEMAND	39.67	50.3	* B-N	14525.5	52.4	DEMAND	39.67
TOTAL DESIGN	42.65	54.6	* C-N	15561.7	56.2	DESIGN	42.65

PANEL: LP-B
LOCATION: EFF SAMPLE BLDG
FED FROM:
DC DEVICE TYPE: Breaker
DEVICE FAMILY: Bolt On
ENCLOSURE: NEMA 1
MOUNTING: Surface
VOLTAGE: 480/277
MAINS(A): BKR
WIRING: 3-Phase 4-Wire
CONTINUOUS(A): 150
BUS SC RATING(A) 22000
FAULT CURRENT(A): 12227

DC AMPS P	NOTES	DESCRIPTION	DEMAND CODE	VA	CKT	PHASE LOADS VA A	B	C	CKT	VA	DEMAND CODE	DESCRIPTION	NOTES	DC AMPS P
20 1		LTS	LTS	140	1	180			2	40	LTS	EXT		20 1
20 3	GFEP	TK 1501 HTR VIA TIC	HEATING	667	3		1333		4	667	HEATING	TK 1502 HTR VIA TIC	GFEP	20 3
"		"		667	5			1333	6	667		"		"
"		"		667	7	1333			8	667		"		"
20 3		XC-1503	GEN	532	9		5368		10	4906	GEN	XFMR 5 PRI		60 2
"		"		532	11			5368	12	4906		"		"
"		"		532	13	532			14	0	SPARE	SPARE		20 1
100 3		BWS-5612	GEN	21000	15		21000		16	0	SPARE	SPARE		20 1
"		"		21000	17			21000	18	0	SPARE	SPARE		20 1
"		"		21000	19	21000			20	0	SPARE	SPARE		20 1
20 1		SPARE	SPARE	0	21		0		22					
20 1		SPARE	SPARE	0	23			0	24					
20 1		SPARE	SPARE	0	25	0			26					
					27				28					
					29				30					
					31				32					
					33				34					
					35				36					
					37				38					
					39				40					
					41				42					

ALL CONNECTED	KVA	MAX PH AMPS	* PHASE TOTALS	VA	AMPS	BUS TOTALS	KVA
TOTAL CONNECTED	73.39	91.0	* A-N	22951.6	82.8	CONNECTED	78.30
TOTAL DEMAND	73.39	91.0	* B-N	25221.7	91.0	DEMAND	78.30
TOTAL DESIGN	75.77	94.4	* C-N	25221.7	91.0	DESIGN	81.68

GENERAL NOTES

1. PORTIONS OF THIS DRAWING WERE PREPARED FROM THE OUTPUT OF ELECTRICAL SYSTEM ANALYSIS SOFTWARE AND DO NOT CONFORM TO LANL DRAFTING STANDARDS.
2. SEE SHEET E-7109 FOR CONDUIT AND WIRE SIZES.

KEYED NOTES

(1) DISCONNECT AND MOTOR CONTROLLER ARE PROVIDED WITH EQUIPMENT.

NO	DATE	CLASS REV	ADC	DESCRIPTION	DWN	DES	CHKD	SUB	APP

AECOM

RLWTF-UP LOW LEVEL WASTE SUBPROJECT

PANEL SCHEDULES

DRAWN	V DAVISON
DESIGN	S MOORE
CHECKED	G MOE
DATE	5/8/14

BLDG. 230 TA-50

SUBMITTED MANNY TARIN — APPROVED FOR RELEASE ED ARTIOLA

Los Alamos NATIONAL LABORATORY PO Box 1663 Los Alamos, New Mexico 87545

SHEET E-7100

411 OF 434

CLASSIFICATION REVIEWER DATE

PROJECT ID 100761 DRAWING NO C55864 REV 0

EUGENE DAVID MOE NEW MEXICO 21389 REGISTERED PROFESSIONAL ENGINEER 09 May 2014

29127

File Location: P:\RLWTF LOW-LEVEL WASTE FACILITY\300 CAD\C55884 MAIN BUILDING\SHEETS\10 ELECTRICAL\55884-E-7100-R0.DWG
Pulled By: MOORE, STEPHEN Plot Date: Monday, May 05, 2014

PANEL: PP-1 | OC DEVICE TYPE: Breaker | ENCLOSURE: NEMA 1 | MAINS(A): BKR | CONTINUOUS(A): 225
LOCATION: TA-50-230 ROOM 1014 | DEVICE FAMILY: Bolt On | MOUNTING: Surface | WIRING: 3-Phase 4-Wire | BUS SC RATING(A) 10000
FED FROM: XFMR 1 SEC | VOLTAGE: 208/120 | FAULT CURRENT(A): 5208

	OC AMPS P	NOTES	DESCRIPTION	DEMAND CODE	VA	CKT	PHASE LOADS VA A	B	C	CKT	VA	DEMAND CODE	DESCRIPTION	NOTES	OC AMPS P
	20 1	RM 1016	FACP	GEN	250	1	1330			2	1080	REC	RM 1016, 18	EXT NORTH	20 1
	20 1	RM 1000	ACCESS CONTROL SYS	GEN	350	3		878		4	528	HVAC	FE-5323	RM 1006	20 1
	20 1	RM 1001 REC	FCS PRINTER	GEN	450	5			1142	6	720	REC	RM 1000C, 03, 05, 06		20 1
	20 1	RM 1001 REC	DVS-1	GEN	566	7	1608			8	1080	REC	RM 1000, A, B, 14		20 1
	20 1	RM 1001 REC	EWS	GEN	566	9		2486		10	1920	GEN	COMM RACK 2	RM 1002	20 1
	20 1	RM 1001 REC	RAD MONITORING	GEN	200	11			2120	12	1920	GEN	COMM RACK 1	RM 1002	20 1
	20 1		RM 1001	REC	720	13	2587			14	1920	GEN	COMM RACK 1	RM 1002	20 1
	20 1	RM 1001	CAB-100	GEN	1740	15		3660		16	1920	GEN	COMM RACK 2	RM 1002	20 1
	20 1	RM 1000C GFCI	WATER COOLER	GEN	480	17			1316	18	900	REC	RM 1002		20 1
(1)	30 2	RM 1018 & EXT	ACR-5328	HVAC	2080	19	2378			20	360	REC	MULTI OUTLET	RM 1002	20 1
	"		"		2080	21		2378		22	360	REC	MULTI OUTLET	RM 1002	20 1
	20 2	RM 1012	ICP-MS ROUGHING PMP	GEN	450	23			667	24	250	GEN	PAGING AMP	RM 1002	20 1
	"		"		450	25	622			26	200	HVAC	CAV-5333, 34, 36, 38	RM 1000A, 09, 12	20 1
	20 2	RM 1012	ICP-MS COOLING SYS	GEN	625	27		750		28	150	HVAC	CAV-5335, 37, 39	RMS 1001, 05, 06	20 1
	"		"		625	29			1821	30	1196	GEN	RO-5600	RM 1012	20 2
	20 1		EXT SOUTH, ROOF	REC	360	31	1500			32	1196		"		"
(2)	20 2	RM 1002 & ROOF	ACR-5326	HVAC	1498	33		2400		34	1000	HVAC	BDE-5341	RM 1000	20 2
	"		"		1498	35			2400	36	1000		"		"
(2)	20 2	RM 1002 & ROOF	ACR-5327	BACKUP	1498	37	2400			38	1000	HVAC	BDE-5342	RM 1016	20 2
	"		"		1498	39		2400		40	1000		"		"
(3)	20 1	ROOF	HEAT TRACE	GEN	1381	41			1442	42	75	GEN	XC-5501	RM 1014	20 1 (4)
	20 2	RM 1009	PS-5700	GEN	780	43	977			44	200	GEN	BAS-3	RM 1014	20 1
	"		"		780	45		780		46	0	SPARE	SPARE		20 1
	20 1		FE-5326	GEN	100	47			100	48	0	SPARE	SPARE		20 1
	20 1		SPARE	SPARE	0	49	0			50	0	SPARE	SPARE		20 1
	20 1		SPARE	SPARE	0	51		0		52	0	SPARE	SPARE		20 1
	20 1		SPARE	SPARE	0	53			0	54	0	SPARE	SPARE		20 1
	20 1		SPARE	SPARE	0	55	0			56	0	SPARE	SPARE		20 1
	20 1		SPARE	SPARE	0	57		0		58	0	SPARE	SPARE		20 1
	20 1		SPARE	SPARE	0	59			0	60	0	SPARE	SPARE		20 1

ALL CONNECTED	KVA	MAX PH AMPS	= PHASE TOTALS	VA	AMPS	BUS TOTALS	KVA
TOTAL CONNECTED	39.58	129.9	= A-N	13191.0	109.8	CONNECTED	39.58
TOTAL DEMAND	36.52	117.6	= B-N	15595.3	129.9	DEMAND	36.52
TOTAL DESIGN	39.39	130.0	= C-N	10815.6	90.1	DESIGN	39.39

PANEL: PP-2 | OC DEVICE TYPE: Breaker | ENCLOSURE: NEMA 1 | MAINS(A): BKR | CONTINUOUS(A): 225
LOCATION: TA-50-230 ROOM 1011 | DEVICE FAMILY: Bolt On | MOUNTING: Surface | WIRING: 3-Phase 4-Wire | BUS SC RATING(A) 10000
FED FROM: XFMR 2 SEC | VOLTAGE: 208/120 | FAULT CURRENT(A): 3282

	OC AMPS P	NOTES	DESCRIPTION	DEMAND CODE	VA	CKT	PHASE LOADS VA A	B	C	CKT	VA	DEMAND CODE	DESCRIPTION	NOTES	OC AMPS P
	20 1		ROLLUP DOOR	GEN	528	1	528			2	0	SPARE	SPARE		20 1
	20 1	GFCI	P-4001, HS-4001	GEN	1297	3		1297		4	0	SPARE	SPARE		20 1
	20 1	GFCI	P-4002, HS-4002	GEN	1297	5			2066	6	769	GEN	MC-1101	VIA XC-1101	20 1
	20 1	GFCI	P-4003, -4006, -4007	GEN	375	7	771			8	400	GEN	FLT-1101		20 1
	20 1	GFCI	P-4010, P-4011	GEN	375	9		1144		10	769	GEN	MC-1301	VIA XC-1301	20 1
	20 1		SPARE	SPARE	0	11			769	12	769	GEN	MC-1702	VIA XC-1702	20 1
	20 1		RM 1101	REC	720	13	1412			14	769	GEN	MC-1704	VIA XC-1704	20 1
	20 1		CAV-5331, 5332	GEN	100	15		869		16	769	GEN	MC-1705	VIA XC-1705	20 1
	20 1		CAB-102	GEN	1160	17			1215	18	85	GEN	HFH	DED REC	20 1
	20 1		CAB-101	GEN	1160	19	1360			20	200	GEN	BAS-1		20 1
	20 1		RM 1011	REC	720	21		1171		22	480	GEN	CAMS		20 1
	20 1		ENC-1701	GEN	100	23			580	24	480	GEN	CAMS		20 1
	20 1		ENC-1703	GEN	200	25	200			26	0	SPARE	SPARE		20 1
	20 1		ENC-1702	GEN	200	27		200		28	0	SPARE	SPARE		20 1
	20 1		SPARE	SPARE	0	29			0	30	0	SPARE	SPARE		20 1
	20 1		SPARE	SPARE	0	31	0			32	0	SPARE	SPARE		20 1
	20 1		SPARE	SPARE	0	33		0		34	0	SPARE	SPARE		20 1
	20 1		SPARE	SPARE	0	35			0	36	0	SPARE	SPARE		20 1
	20 1		SPARE	SPARE	0	37	0			38	0	SPARE	SPARE		20 1
						39				40					
						41				42					

ALL CONNECTED	KVA	MAX PH AMPS	= PHASE TOTALS	VA	AMPS	BUS TOTALS	KVA
TOTAL CONNECTED	12.99	38.2	= A-N	4249.1	35.4	CONNECTED	12.99
TOTAL DEMAND	12.99	38.2	= B-N	4587.5	38.2	DEMAND	12.99
TOTAL DESIGN	12.99	38.2	= C-N	4182.5	34.8	DESIGN	12.99

GENERAL NOTES

1. PORTIONS OF THIS DRAWING WERE PREPARED FROM THE OUTPUT OF ELECTRICAL SYSTEM ANALYSIS SOFTWARE AND DO NOT CONFORM TO LANL DRAFTING STANDARDS.
2. SEE SHEETS E-7109 AND E-7110 FOR WIRE AND CONDUIT SIZES.

KEYED NOTES

(1) BRANCH CIRCUIT FOR BOTH INDOOR AND OUTDOOR COMPONENTS OF SPLIT SYSTEM. SEE SHEETS E-1001 AND E-1101.

(2) BRANCH CIRCUIT FOR BOTH INDOOR AND OUTDOOR COMPONENTS OF SPLIT SYSTEM. SEE SHEETS E-1102 AND E-4102.

(3) SUMP PUMP (PS-5700) POWERED VIA SWITCHED RECEPTACLE. SEE E-1102 KEYED NOTE 6.

(4) DRAIN VALVE SOLENOIDS ARE CONTROLLED VIA CONTROL PANEL IN ELECTRICAL EQUIPMENT ROOM 1014. SEE SHEET E-4100 KEYED NOTE 7.

NO	DATE	CLASS REV	ADC	DESCRIPTION	DWN	DES	CHKD	SUB	APP

AECOM

RLWTF-UP LOW LEVEL WASTE SUBPROJECT

PANEL SCHEDULES

DRAWN V DAVISON | DESIGN S MOORE | CHECKED G MOE | DATE 5/6/14

BLDG. 230 TA-50

SUBMITTED MANNY TARIN | APPROVED FOR RELEASE ED ARTIGLIA

Los Alamos NATIONAL LABORATORY PO Box 1663 Los Alamos, New Mexico 87545

SHEET E-7101 412 OF 434

CLASSIFICATION | REVIEWER | DATE

PROJECT ID 100761 | DRAWING NO C55864 | REV 0

EUGENE DAVID MOE NEW MEXICO 21389 PROFESSIONAL ENGINEER

File Location: P:\RLWTF LOW-LEVEL WASTE FACILITY\300 CAD\C55864 MAIN BUILDING\SHEETS\10 ELECTRICAL\55864-E-7101-100.DWG
Plotted By: MOORE, STEPHEN Plot Date: Monday, May 05, 2014

PANEL: PP-3 | DC DEVICE TYPE: Breaker | ENCLOSURE: NEMA 1 | MAINS(A): BKR | CONTINUOUS(A): 225
LOCATION: TA-50-230 ROOM 1012 | DEVICE FAMILY: Bolt On | MOUNTING: Surface | WIRING: 3-Phase 4-Wire | BUS SC RATING(A) 10000
FED FROM: | VOLTAGE: 208/120 | FAULT CURRENT(A): 2887

DC AMPS P	NOTES	DESCRIPTION	DEMAND CODE	VA	CKT	PHASE LOADS VA A	B	C	CKT	VA	DEMAND CODE	DESCRIPTION	NOTES	DC AMPS P
20 1	RM 1012	FUME HOOD	GEN	440	1	880			2	440	GEN	FUME HOOD	RM 1012	20 1
20 1	RM 1012	FUME HOOD	GEN	440	3		1661		4	1221	GEN	FUME HOOD W/OVEN	RM 1012	20 1
20 1	REC RM 1012	REFRIGERATOR	GEN	444	5			889	6	444	GEN	REFRIGERATOR	REC RM 1012	20 1
0 1		SPARE	SPARE	0	7	0			8	0	SPARE	SPARE		20 1
20 1	REC RM 1012	DISHWASHER	GEN	1921	9		3104		10	1260	REC	RM 1009, 10, 12	EXT SOUTH	20 1
30 2	REC RM 1012	MASS SPEC	GEN	1860	11			2871	12	1080	REC	LAB BENCH	RM 1012	20 1
"		"		1860	13	2699			14	900	REC	LAB BENCH	RM 1012	20 1
20 1	GFCI RM 1012	LAB BENCH	REC	360	15		1349		16	1016	GEN	WORKSTATION	RM 1012	20 1
20 1	GFCI RM 1012	LAB BENCH	REC	540	17			1520	18	1016	GEN	WORKSTATION	RM 1012	20 1
20 1	RM 1012	WORKSTATION	GEN	1016	19	2032			20	1016	GEN	WORKSTATION	RM 1012	20 1
20 1	RM 1012	WORKSTATION	GEN	1016	21		2446		22	1441	GEN	ION CHROMATOGRAPH	RM 1012	20 1
20 1	RM 1012	VACUUM PMP	GEN	864	23			1101	24	240	GEN	CAM	RM 1012	20 1
20 1		LAB BENCH	REC	900	25	982			26	100	GEN	AIT-5300	RM 1012	20 1
20 1	RM 1009	PCM-1	GEN	300	27		700		28	400	GEN	LIQ SCINTILATION CTR		20 1
20 1	RM 1009	PCM-2	GEN	300	29			1747	30	1498	GEN	HWE-5900		20 2
					31	1498			32	1498		"		"
					33				34					
					35				36					
					37				38					
					39		566		40	566	GEN	WORKSTATION	RM 1012	20 1
					41			1080	42	1080	REC	LAB BENCH	RM 1012	20 1

ALL CONNECTED	KVA	MAX PH AMPS	* PHASE TOTALS	VA	AMPS	BUS TOTALS	KVA
TOTAL CONNECTED	26.55	80.0	* A-N	7956.7	66.3	CONNECTED	26.55
TOTAL DEMAND	26.55	80.0	* B-N	9606.8	80.0	DEMAND	26.55
TOTAL DESIGN	26.55	80.0	* C-N	9023.9	75.1	DESIGN	26.55

PANEL: PP-5 | DC DEVICE TYPE: Breaker | ENCLOSURE: NEMA 1 | MAINS(A): BKR | CONTINUOUS(A): 100
LOCATION: EFF SAMPLE BLDG 261 | DEVICE FAMILY: Bolt On | MOUNTING: Surface | WIRING: Single-Phase 3-Wire | BUS SC RATING(A) 10000
FED FROM: XFMR 5 PRI | VOLTAGE: 230/115 | FAULT CURRENT(A): 2000

DC AMPS P	NOTES	DESCRIPTION	DEMAND CODE	VA	CKT	PHASE LOADS VA A	B	C	CKT	VA	DEMAND CODE	DESCRIPTION	NOTES	DC AMPS P
20 1		REC	REC	540	1	540			2	540	REC	REC		20 1
20 1	GFCI	P-4012, P-4013	GEN	200	3		1357		4	1160	GEN	CAB-104		20 1
20 1	GFEP	HEAT TRACE	HEATING	489	5	1956			6	1467	HVAC	ACR-5329	INT & EXT	20 2
20 1	GFEP	HEAT TRACE	HEATING	604	7		2071		8	1467		"		"
30 2		BDE-5343	HEATING	2000	9	2020			10	25	GEN	LI-5707	LEAK DETECTOR	20 1
"		"		2000	11		2419		12	500	HEATING	HTR-5701		20 1
20 1		PS-5701	GEN	948	13	948			14	0	SPARE	SPARE		20 1
					15				16					
					17				18					
					19				20					
					21				22					
					23				24					

ALL CONNECTED	KVA	MAX PH AMPS	* PHASE TOTALS	VA	AMPS	BUS TOTALS	KVA
TOTAL CONNECTED	11.05	50.0	* A-N	5306.2	46.1	CONNECTED	11.05
TOTAL DEMAND	9.81	50.0	* B-N	5750.1	50.0	DEMAND	11.05
TOTAL DESIGN	13.15	59.7	* C-N	0.0	0.0	DESIGN	13.15

GENERAL NOTES

1. PORTIONS OF THIS DRAWING WERE PREPARED FROM THE OUTPUT OF ELECTRICAL SYSTEM ANALYSIS SOFTWARE AND DO NOT CONFORM TO LANL DRAFTING STANDARDS.
2. SEE SHEET E-7110 FOR WIRE AND CONDUIT SIZES.

NO	DATE	CLASS REV	ADC	DESCRIPTION	DWN	DES	CHKD	SUB	APP

AECOM

RLWTF-UP LOW LEVEL WASTE SUBPROJECT

PANEL SCHEDULES

DRAWN	V DAVISON
DESIGN	S MOORE
CHECKED	G MOE
DATE	5/8/14

BLDG. 230 TA-50

SUBMITTED MANNY TARIN | APPROVED FOR RELEASE ED ARTIGLIA

Los Alamos NATIONAL LABORATORY PO Box 1663 Los Alamos, New Mexico 87545

SHEET E-7102

413 OF 434

CLASSIFICATION | REVIEWER | DATE

PROJECT ID 100761 | DRAWING NO C55864 | REV 0

EUGENE DAVID MOE 21389 REGISTERED PROFESSIONAL ENGINEER

File Location: P:\RLWTF LOW-LEVEL WASTE FACILITY\500 CAD\C53864 MAIN BUILDING\SHEETS\10 ELECTRICAL\53864-E-7102-RB.DWG
Plotted By: MOORE, STEPHEN Plot Date: Monday, May 05, 2014

12151

LUMINAIRE SCHEDULE

TYPE	DESCRIPTION	FINISH	LENS OR LOUVER	BALLAST	LAMPS	MANUFACTURER/MODEL NO.	
A	16" X 4' FOUR LAMP SUSPENDED HIGH-BAY LUMINAIRE WITH UPLIGHT	HIGH GLOSS BAKED WHITE ENAMEL	WHITE STEEL CROSS BAFFLE	120/277V PROGRAMMED START	4-F54T5HO	COLUMBIA LIGHTING LHEW4-454-WCBU-EPU	(2)
B	8" X 4' TWO LAMP SURFACE MOUNTING GASKETED LUMINAIRE	GALVANIZED STEEL	PRISMATIC ACRYLIC	120/277V PROGRAMMED START	2-F32T8	COLUMBIA LIGHTING FNPS4-232-PA-EPU-2H-SSTP	
C	1' X 4' TWO LAMP CENTER LOUVER RECESSED INDIRECT LUMINAIRE	HIGH GLOSS BAKED WHITE ENAMEL	WHITE ALUMINUM CROSS BAFFLE	120/277V PROGRAMMED START	2-F54T5HO	COLUMBIA LIGHTING STEL14-254-G-WCBMPO-EPU	(2)
D	1' X 4' TWO LAMP SURFACE INDIRECT LUMINAIRE WITH METAL PERFORATED OVERLAY	NON-GLARE HIGH-REFLECTANCE WHITE POWDER COAT	WHITE ALUMINUM CROSS BAFFLE	120/277V PROGRAMMED START	2-F54T5HO	COLUMBIA LIGHTING STP14-254-WCBMPO-EPU	(2)
E	4" X 4' ONE LAMP LOUVER RECESSED DIRECT LUMINAIRE W/ INTEGRAL CROSS TEE GRID INSERT	HIGH GLOSS BAKED WHITE ENAMEL	WHITE ALUMINUM CROSS BAFFLE	120/277V PROGRAMMED START	1-F54T5HO	COLUMBIA LIGHTING BRO44-154GT-MW-EPU	(2)
F	10" X 4' TWO LAMP SURFACE/SUSPENDED CORRIDOR WRAP	HIGH GLOSS BAKED WHITE ENAMEL	PRISMATIC ACRYLIC	120/277V PROGRAMMED START	2-F32T8	COLUMBIA LIGHTING WC4-232-EPU	(2)
G	8" X 4' ONE LAMP WALL MOUNTING LUMINAIRE	HIGH GLOSS BAKED WHITE ENAMEL	PRISMATIC ACRYLIC	120/277V PROGRAMMED START	1-F32T8	COLUMBIA LIGHTING WAL4-132-EPU	(2)
K	FULL CUTOFF, ALUMINUM HOUSING, WALL MOUNTING, 13 WATTS, LED WALL PACK	BRONZE POLYESTER POWDER COATING	TEMPERED GLASS	120/277V PROGRAMMED START	1-MULTI CHIP LEDS	RAB LIGHTING, INC WPLED13/ES	
L	AREA LUMINAIRE, ALUMINUM HOUSING, POLE MOUNTING, WITH 25' TAPERED ALUMINUM POLE, 78 WATTS, LED	BRONZE POLYESTER POWDER COATING	TEMPERED GLASS	120/277V	6-MULTI-CHIP LEDS	RAB LIGHTING, INC ALED3T78	
M	EXIT SIGN, ENERGY STAR COMPLIANT, LED-BASED, SELF-DIAGNOSTIC, NO. OF FACES AND ARROWS AS SHOWN ON DRAWING	WHITE ALUMINUM	SILKSCREENED	120/277V	LED, RED	DUAL LITE SE SERIES W/SPECTRON OPTION	(1)

LIGHTING CONTROL SCHEDULE

ROOM/LOCATION	DESCRIPTION	AUTOMATIC CONTROL	MANUAL CONTROL
1000	VESTIBULE	NONE REQUIRED	SINGLE LEVEL SWITCHING
1000A & 1000B	LOBBY & CORRIDOR	CEILING OCCUPANCY SENSOR	NONE
1000C	CORRIDOR	CEILING OCCUPANCY SENSOR	NONE
1002	COMM ROOM	NONE REQUIRED	SINGLE LEVEL SWITCHING
1003	JANITOR/STORAGE	OCCUPANCY SENSING SWITCH	NONE
1004	OPERATIONS CENTER	NONE REQUIRED	SINGLE LEVEL SWITCHING
1005	MEN'S LOCKER ROOM	CEILING OCCUPANCY SENSOR	SINGLE LEVEL SWITCHING
1006	WOMEN'S LOCKER ROOM	CEILING OCCUPANCY SENSOR	SINGLE LEVEL SWITCHING
1009	RATED CORRIDOR	CEILING OCCUPANCY SENSOR	SINGLE LEVEL SWITCHING
1010	DECONTAMINATION SHOWER	NONE REQUIRED	SINGLE LEVEL SWITCHING
1011	LLW PROCESS AREA	NONE REQUIRED	DUAL LEVEL SWITCHING
1012	WET LAB	CEILING OCCUPANCY SENSOR	DUAL LEVEL SWITCHING
1014	ELECTRICAL ROOM	NONE REQUIRED	SINGLE LEVEL SWITCHING
1016	FIRE RISER	NONE REQUIRED	SINGLE LEVEL SWITCHING
1018	VACUUM PUMP ROOM	NONE REQUIRED	SINGLE LEVEL SWITCHING
INTERIOR	LLW UTILITY BUILDING	NONE REQUIRED	DUAL LEVEL SWITCHING
YARD	EXTERIOR POLE LIGHTING, DWG E-1002	LIGHTING CONTACTOR AND PHOTOCELL	MANUAL OVERRIDE, PANEL LC-A
BUILDING EXTERIOR EAST	BUILDING EXTERIOR	LIGHTING CONTACTOR AND PHOTOCELL	MANUAL OVERRIDE, PANEL LC-A
LLW UTILITY BUILDING EXTERIOR	LLW UTILITY BUILDING EXTERIOR	LIGHTING CONTACTOR AND PHOTOCELL	MANUAL OVERRIDE, PANEL LC-C
YARD	EXTERIOR POLE LIGHTING, DWG E-1002	LIGHTING CONTACTOR AND PHOTOCELL	MANUAL OVERRIDE, PANEL LC-C

GENERAL NOTES

1. THE OVERALL LIGHTING CONTROL STRATEGY SHALL BE AS FOLLOWS:
   - A. INTERIOR AND EXTERIOR LIGHTING CONTROLS SHALL COMPLY WITH ASHRAE/IESNA 90.1.
   - B. CONTROL OF INTERIOR AND EXTERIOR LIGHTING SHALL BE PERFORMED PER THE LIGHTING CONTROL SCHEDULE, SPECIFICATIONS AND DRAWINGS.
2. THE INTERIOR LIGHTING CONTROL STRATEGY SHALL BE AS FOLLOWS:
   - A. FOR OCCUPIED SPACES IN EXCESS OF 100 SQ FT., DUAL LEVEL SWITCHING SHALL BE PROVIDED UNLESS THE NUMBER OF LUMINAIRES ARE TOO FEW OR IT IS DEEMED TO PRESENT A SAFETY HAZARD.
   - B. OCCUPANCY SENSING SWITCHES SHALL BE PROVIDED IN THE FOLLOWING TYPES OF SPACES:
     - i. OFFICES
     - ii. LABORATORIES
     - iii. UTILITY ROOMS
     - v. REST ROOMS
     - vi. STORAGE ROOMS
     - vii. CORRIDORS
     - viii. LOBBIES
   - C. IN CORRIDORS, UN-SWITCHED NIGHT LIGHTING LUMINAIRES SHALL BE PROVIDED AT THE ENTRANCE AND EXIT TO THE CORRIDOR AND AT MAJOR INTERSECTIONS.
   - D. FOR DUAL LEVEL CONTROL, MANUAL AND AUTOMATIC CONTROLS SHALL BE COORDINATED SO THAT THE MANUAL CONTROL IS ABLE TO REDUCE THE CONNECTED LIGHTING LOAD BY AT LEAST 50% IN A REASONABLY UNIFORM PATTERN.
   - E. INTERIOR LIGHTING CONTROL STRATEGY, BY ROOM, IS DETAILED IN THE LIGHTING CONTROL SCHEDULE SHOWN ON THIS DRAWING.
3. EXTERIOR LIGHTING CONTROL STRATEGY:
   - A. SENSING FOR EXTERIOR LIGHTING SHALL BE PROVIDED BY ONE PHOTOCELL AND ONE LIGHTING CONTACTOR IN BOTH BUILDING 230 AND BUILDING 250.

KEYED NOTES

(1) THE EXIT SIGN SERIES LISTED IS THE DUAL LITE CROSS-REFERENCED EQUIVALENT TO OBSOLETE CORNERSTONE MODELS SESGWEI AND SEDGWEI, DETAILED IN LANL'S EMERGENCY LIGHTING SPECIFICATION.

(2) PROVIDE EMERGENCY BATTERY PACK MODEL SUFFIX "EL" WHEN INDICATED ON LIGHTING PLAN DRAWINGS AS EMERGENCY LUMINAIRES.

NO	DATE	CLASS REV	ADC	DESCRIPTION	DWN	DES	CHKD	SUB	APP

AECOM

RLWTF-UP LOW LEVEL WASTE SUBPROJECT

LUMINAIRE SCHEDULE

BLDG. 230 TA-50

DRAWN	V DAVISON
DESIGN	S MOORE
CHECKED	D MOE
DATE	5/8/14

SUBMITTED MANNY TARIN — APPROVED FOR RELEASE ED ARTIGLIA

Los Alamos NATIONAL LABORATORY PO Box 1663 Los Alamos, New Mexico 87545

SHEET E-7103 414 OF 434

CLASSIFICATION | REVIEWER | DATE

PROJECT ID 100761 | DRAWING NO C55864 | REV 0

EUGENE DAVID MOE — NEW MEXICO — 21369 — PROFESSIONAL ENGINEER — 05 May 2014

SSh1: 12165

File Location: P:\RLWTF LOW-LEVEL WASTE FACILITY\300 CAD\C55864 MAIN BUILDING\SHEETS\16 ELECTRICAL\55864-E-7103-RG.DWG
Plotted By: MOORE, STEPHEN Plot Date: Monday, May 05, 2014

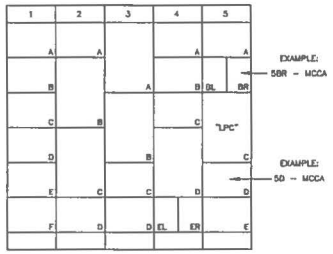

CIRCUIT DESIGNATIONS: MOTOR CONTROL CENTER (8)

SCALE: NONE

1. CIRCUIT NUMBERS FOR CIRCUITS EMANATING FROM THIS EQUIPMENT WILL UTILIZE THE HORIZONTAL AND VERTICAL LOCATORS OF THE CUBICLE FROM WHICH THE CIRCUIT IS FED.
2. WHEN THIS EQUIPMENT HAS A PANELBOARD INSTALLED WITHIN IT, THE PANELBOARD WILL BE CODED SEPARATELY. EXAMPLE: COMPARTMENT 5C IS PANELBOARD "LPC". IT IS CODED 3–34LPC. CIRCUIT FEEDING LPC IS 5BL–MCCA.

*USE L AND R TO DESIGNATE LEFT SIDE AND RIGHT SIDE CIRCUIT BREAKER WHEN TWO CIRCUIT BREAKERS ARE INSTALLED IN THE SAME CUBICLE.

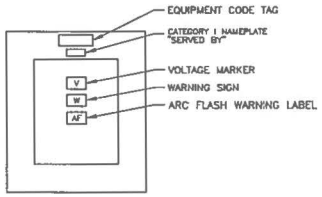

ELECTRICAL IDENTIFICATION: PANELBOARD

SCALE: NONE

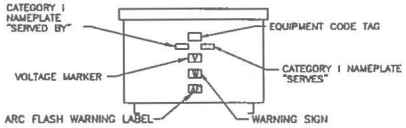

ELECTRICAL IDENTIFICATION: TRANSFORMER

SCALE: NONE

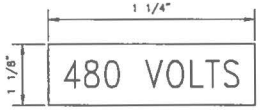

ELECTROMARK OR EQUAL

VOLTAGE MARKER

SCALE: NONE

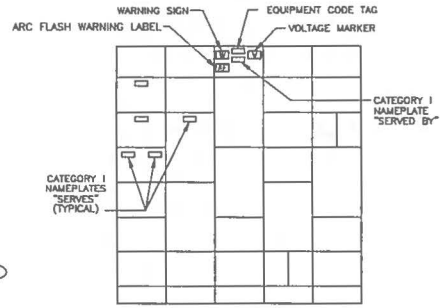

ELECTRICAL IDENTIFICATION: MOTOR CONTROL CENTER (8)

SCALE: NONE

1. ONLY COMPARTMENTS SERVING EQUIPMENT WILL HAVE CATEGORY I NAMEPLATES. SPARE UNITS AND SPACES DO NOT REQUIRE ANY NAMEPLATES.
2. MAIN WILL HAVE A CATEGORY I NAMEPLATE INSTALLED AND MAY HAVE A CATEGORY II NAMEPLATE INSTALLED.

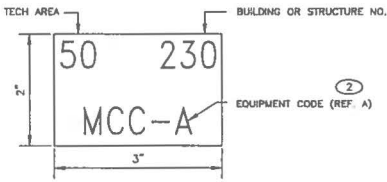

LETTERING SIZE = 48 PT.

EQUIPMENT CODE TAG

SCALE: NONE

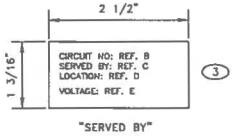

"SERVED BY"

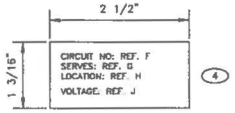

"SERVES"

LETTERING SIZE = 10 PT.

CATEGORY I NAMEPLATES

SCALE: NONE

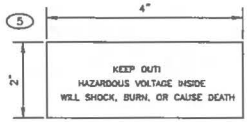

(1) ELECTROMARK OR EQUAL

WARNING SIGN

SCALE: NONE

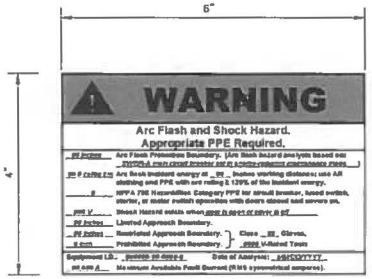

480V ARC FLASH WARNING LABEL (6)

SCALE: NONE

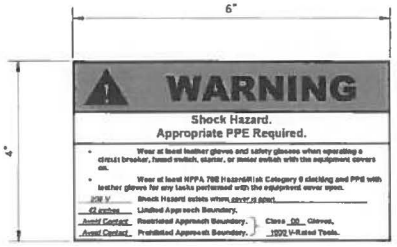

STANDARD ARC FLASH WARNING LABEL (7)

SCALE: NONE

GENERAL NOTES

1. PORTIONS OF THIS DRAWING WERE IMPORTED FROM LANL STANDARD ST–D5000–3 AND DO NOT COMPLETELY CONFORM TO LANL DRAFTING STANDARDS.

KEYED NOTES

(1) SIGN SHALL CONFORM TO ANSI Z535.4 AND OSHA DANGER AND CAUTION SPECIFICATIONS.

(2) REFER TO EQUIPMENT CODE TAG INFORMATION ON SHEET E–7105 FOR REFERENCE DATA.

(3) REFER TO CATEGORY I NAMEPLATE "SERVED BY" INFORMATION ON SHEETS E–7105 AND E–7106 FOR REFERENCE DATA.

(4) REFER TO CATEGORY I NAMEPLATE "SERVES" INFORMATION ON SHEETS E–7105 AND E–7106 FOR REFERENCE DATA.

(5) DIMENSIONS SHOWN ARE MINIMUM DIMENSIONS.

(6) PROVIDE ARC FLASH LABELS WITH DIMENSIONS AND FORMAT AS SHOWN. SEE SPECIFICATION SECTION 26 0553 FOR A COMPLETE LIST OF SPECIFIC ARC FLASH LABELS BY EQUIPMENT ID.

(7) PROVIDE STANDARD ARC FLASH LABEL FOR ALL EQUIPMENT OPERATING AT 240V OR LESS.

(8) GENERIC MOTOR CONTROL CENTER FRONT ARRANGEMENT IS FOR ILLUSTRATIVE PURPOSES ONLY.

NO	DATE	CLASS REV	ADC	DESCRIPTION	DWN	DES	CHKD	SUB	APP

AECOM

RLWTF–UP LOW LEVEL WASTE SUBPROJECT

EQUIPMENT NAMEPLATE SCHEDULES

DRAWN	V DAVISON	
DESIGN	S MOORE	
CHECKED	G MOE	
DATE	5/8/14	

BLDG. 230 TA–50

SUBMITTED MANNY TARIN

APPROVED FOR RELEASE ED ARTIGLIA

Los Alamos NATIONAL LABORATORY PO Box 1663 Los Alamos, New Mexico 87545

SHEET E–7104

415 OF 434

CLASSIFICATION | REVIEWER | DATE

PROJECT ID 100761 | DRAWING NO C55864 | REV 0

EUGENE DAVID MOE NEW MEXICO 21389 REGISTERED PROFESSIONAL ENGINEER 5/8/14

99121 :

File Location: P:\RLWTF LOW-LEVEL WASTE FACILITY\300 CAD\C55864 MAIN BUILDING\SHEETS\10 ELECTRICAL\55864-E-7104-RD.DWG
Plotted By: MOORE, STEPHEN Plot Date: Monday, May 05, 2014

EQUIPMENT CODE TAG INFORMATION		CATEGORY 1 NAMEPLATE "SERVED BY" INFORMATION				CATEGORY 1 NAMEPLATE "SERVES" INFORMATION			
EQUIPMENT DESCRIPTION	EQUIPMENT CODE "REF A"	CIRCUIT NO: "REF B"	SERVED BY: "REF C"	LOCATION: "REF D"	VOLTAGE: "REF E"	CIRCUIT NO: "REF F"	SERVES: "REF G"	LOCATION: "REF H"	VOLTAGE: "REF J"
13.2 KV DELTA TO 480Y/277V TRANSFORMER	XFMR-A		SERVICE SWITCH	MH 50-109	13.2 kV		SWBD-A	BLDG 230	480V
480Y/277V 3-PHASE PANELBOARD	SWBD-A	MAIN	XFMR-A	OUTSIDE BLDG 230	480V	7	LP-A	RM 1014	480V
						9	LP-B	BLDG 261	480V
						4	XFMR-1	RM 1014	480V
						3	XFMR-2	RM 1011	480V
						5	XFMR-3	RM 1014	480V
						6	EVAP-1701	RM 1011	480V
						10	MCC-A	RM 1011	480V
						8	MCC-B	RM 1014	480V
LIGHTING PANEL	LP-A	7	SWBD-A	RM 1014	480V				
LIGHTING PANEL	LP-B	9	SWBD-A	RM 1014	480V				
75 KVA TRANSFORMER	XFMR-1	4	SWBD-A	RM 1014	480V	SECONDARY	PP-1	RM 1014	208V
45 KVA TRANSFORMER	XFMR-2	3	SWBD-A	RM 1014	480V	SECONDARY	PP-2	RM 1011	208V
45 KVA TRANSFORMER	XFMR-3	5	SWBD-A	RM 1014	480V	SECONDARY	PP-3	RM 1012	208V
15 KVA TRANSFORMER	XFMR-5	8	LP-B	BLDG 261	480V	SECONDARY	PP-5	BLDG 261	240V
POWER PANEL	PP-1	SECONDARY	XFMR-1	RM 1014	208V				
POWER PANEL	PP-2	SECONDARY	XFMR-2	RM 1011	208V				
POWER PANEL	PP-3	SECONDARY	XFMR-3	RM 1014	208V				
POWER PANEL	PP-5	SECONDARY	XFMR-5	BLDG 261	240V				
MOTOR CONTROL CENTER	MCC-A	10	SWBD-A	RM 1014	480V	SEE "SERVES" TABLE			
MOTOR CONTROL CENTER	MCC-B	8	SWBD-A	RM 1014	480V	SEE "SERVES" TABLE			
EVAPORATOR	EVAP-1701	6	SWBD-A	RM 1014	480V				
EMERGENCY SHOWER HEATER	BWS-5602	12	SWBD-A	RM 1014	480V				
EMERGENCY SHOWER HEATER	BWS-5611	1Q	MCC-A	RM 1011	480V				
EMERGENCY SHOWER HEATER	BWS-5608	2W	MCC-A	RM 1011	480V				
EMERGENCY SHOWER HEATER	BWS-5601	3M	MCC-A	RM 1011	480V				
REVERSE OSMOSIS CIP SKID	SKID-4322	3S	MCC-A	RM 1011	480V				
REVERSE OSMOSIS SKID	ROU-1301	3Q	MCC-A	RM 1011	480V				
SAFETY SHOWER BOOSTER PUMP	PPB-5612	3U	MCC-A	RM 1011	480V				
RO ADJUST TANK TRANSFR PUMP	P-1302	1S	MCC-A	RM 1011	480V				
SLUDGE THICKENING DECANT PUMP	P-1703	1E	MCC-A	RM 1011	480V				
EVAPORATOR SUPPLY PUMP	P-1705	1I	MCC-A	RM 1011	480V				
EVAPORATOR CONDENSATE PUMP	P-1706	1M	MCC-A	RM 1011	480V				
FILTRATE PRESS PUMP	P-1707	2A	MCC-A	RM 1011	480V				
MICRO-FILTRATION PUMP	P-1201	3O	MCC-A	RM 1011	480V				
ROTARY PRESS FILTER	FLT-1704	3W	MCC-A	RM 1011	480V				
ION EXCHANGE FEED PUMP	P-1407	2K	MCC-A	RM 1011	480V				
WATER REUSE PUMP	P-1408	3A	MCC-A	RM 1011	480V				
DISCONNECT SWITCH	DS-5322	1M	MCC-B	RM 1014	480V		P-5322	ROOF	480V
DISCONNECT SWITCH	DS-5313	3C	MCC-B	RM 1014	480V		P-5313	ROOF	480V
DISCONNECT SWITCH	DS-5314	2N	MCC-B	RM 1014	480V		P-5314	ROOF	480V
DISCONNECT SWITCH	DS-5321	2D	MCC-B	RM 1014	480V		P-5321	ROOF	480V
DISCONNECT SWITCH	DS-5103	1E	MCC-B	RM 1014	480V		P-5103	ROOF	480V
SANITARY LIFT STATION	PS-5000/5001	12,14,16	LP-A	RM 1014	480V				
LAB VACUUM PUMPS	PV-5002	11,13,15	LP-A	RM 1014	480V				
CAM & FAS VACUUM PUMPS	PV-5001A/B/C	17,19,21	LP-A	RM 1014	480V				
SEWAGE LIFT STATION	PS-5000/5001	12,14,16	LP-A	RM 1014	480V				
LIGHTING CONTACTOR	LC-A	8,9,10	LP-A	RM 1014	480V				
TANK HEATER TEMP. CONTROLLER	TIC-1501	3,5,7	LP-B	BLDG 261	480V		HTR-1501	OUTSIDE BLDG 261	480V
TANK HEATER TEMP. CONTROLLER	TIC-1502	4,6,8	LP-B	BLDG 261	480V		HTR-1502	OUTSIDE BLDG 261	480V
EFFLUENT PUMP CONTROLLER	XC-1503	9,11,13	LP-B	BLDG 261	480V		P-1503	OUTSIDE BLDG 261	480V
EMERGENCY SHOWER HEATER	BWS-5612	15,17,19	LP-B	BLDG 261	480V				
DISCONNECT SWITCH	DS-5326	23,25	PP-1	RM 1014	480V		ACR-5326	RM 1002 & ROOF	208V
DISCONNECT SWITCH	DS-5327	27,29	PP-1	RM 1014	480V		ACR-5327	RM 1002 & ROOF	208V
FLOOR DRAIN SOLENOID CONTROLLER	XC-5501	42	PP-1	RM 1014	120V		SOV-5501	RM-1009	120V
							SOV-5502	RM-1012	120V
							SOV-5503	RM-1011	120V
SUMP PUMP INTERLOCK CONTROLLER	XC-5703	43,45	PP-1	RM 1014	208V		PS-5700	RM-1009	480V
UNIT HEATER	BDE-5341	34,36	PP-1	RM 1014	208V				
UNIT HEATER	BDE-5342	38,40	PP-1	RM 1014	208V				
BUILDING AUTOMATION SYSTEM	BAS-3	44	PP-1	RM 1014	120V				

NO	DATE	CLASS REV	ADC	DESCRIPTION	DWN	DES	CHKD	SUB	APP

AECOM

RLWTF-UP LOW LEVEL WASTE SUBPROJECT

EQUIPMENT NAMEPLATE SCHEDULES

DRAWN: V DAVISON
DESIGN: S MOORE
CHECKED: G MOE
DATE: 5/8/14

BLDG. 230 TA-50

SUBMITTED: MANNY TARIN
APPROVED FOR RELEASE: ED ARTIGUA

Los Alamos NATIONAL LABORATORY
PO Box 1663 Los Alamos, New Mexico 87545

SHEET: E-7105
416 OF 434

CLASSIFICATION | REVIEWER | DATE

PROJECT ID: 100761
DRAWING NO: C55864
REV: 0

EUGENE DAVID MOE — NEW MEXICO — 21389 — REGISTERED PROFESSIONAL ENGINEER — 6/27/14

File: Location: P:\RLWTF LOW-LEVEL WASTE FACILITY\300 CAD\C55864 MAIN BUILDING\SHEETS\10 ELECTRICAL\C55864-E-7105-R0.DWG
Plotted By: MOORE, STEPHEN Plot Date: Monday, May 05, 2014

12167

CATEGORY 1 NAMEPLATE "SERVES" INFORMATION				
EQUIPMENT NAME	CIRCUIT NO: "REF F"	SERVES: "REF G"	LOCATION: "REF H"	VOLTAGE: "REF J"
MOTOR CONTROL CENTER MCC-A	1Q	BWS-5611	RM 1011	480V
	2W	BWS-5608	RM 1011	480V
	3M	BWS-5601	RM 1011	480V
	3S	SKID-4322	RM 1011	480V
	3Q	ROU-1301	RM 1011	480V
	3U	PPB-5612	RM 1011	480V
	1S	P-1302	RM 1011	480V
	1E	P-1703	RM 1011	480V
	1I	P-1705	RM 1011	480V
	2A	P-1707	RM 1011	480V
	1M	P-1706	RM 1011	480V
	3O	P-1201	RM 1011	480V
	3W	FLT-1704	RM 1011	480V
	2K	P-1407	RM 1011	480V
	3A	P-1408	RM 1011	480V

CATEGORY 1 NAMEPLATE "SERVES" INFORMATION				
EQUIPMENT NAME	CIRCUIT NO: "REF F"	SERVES: "REF G"	LOCATION: "REF H"	VOLTAGE: "REF J"
MOTOR CONTROL CENTER MCC-B	1M	DS-5322	ROOF	480V
	3C	DS-5313	ROOF	480V
	2N	DS-5314	ROOF	480V
	2D	DS-5321	ROOF	480V
	1E	DS-5103	ROOF	480V

EQUIPMENT CODE TAG INFORMATION	CATEGORY 1 NAMEPLATE "SERVED BY" INFORMATION					CATEGORY 1 NAMEPLATE "SERVES" INFORMATION			
EQUIPMENT DESCRIPTION	EQUIPMENT CODE "REF A"	CIRCUIT NO: "REF B"	SERVED BY: "REF C"	LOCATION: "REF D"	VOLTAGE: "REF E"	CIRCUIT NO: "REF F"	SERVES: "REF G"	LOCATION: "REF H"	VOLTAGE: "REF J"
ENCLOSURE	ENC-1701	23	PP-2	RM 1011	120V				
ENCLOSURE	ENC-1702	27	PP-2	RM 1011	120V				
ENCLOSURE	ENC-1703	25	PP-2	RM 1011	120V				
MIXER MOTOR CONTROLLER	MC-1101	6	PP-2	RM 1011	120V				
MIXER MOTOR CONTROLLER	MC-1301	10	PP-2	RM 1011	120V				
MIXER MOTOR CONTROLLER	MC-1702	12	PP-2	RM 1011	120V				
MIXER MOTOR CONTROLLER	MC-1704	14	PP-2	RM 1011	120V				
MIXER MOTOR CONTROLLER	MC-1705	16	PP-2	RM 1011	120V				
FILTER	FLT-1101	8	PP-2	RM 1011	120V				
BUILDING AUTOMATION SYSTEM	BAS-1	20	PP-2	RM 1011	120V				
DISCONNECT SWITCH	DS-5329	6,8	PP-5	BLDG 261	208V		ACR-5329	BLDG 261	208V
UNIT HEATER	BDE-5343	9,11	PP-5	BLDG 261	208V				
FACILITY CONTROL SYSTEM CABINET	CAB-100	15	PP-1	RM 1014	120V				
FACILITY CONTROL SYSTEM CABINET	CAB-101	19	PP-2	RM 1011	120V				
FACILITY CONTROL SYSTEM CABINET	CAB-102	17	PP-2	RM 1011	120V				
FACILITY CONTROL SYSTEM CABINET	CAB-104	4	PP-5	BLDG 261	120V				

NO	DATE	CLASS REV	ADC	DESCRIPTION	DWN	DES	CHKD	SUB	APP

AECOM

RLWTF-UP LOW LEVEL WASTE SUBPROJECT

EQUIPMENT NAMEPLATE SCHEDULES

DRAWN V DAVISON
DESIGN S MOORE
CHECKED G MOE
DATE 5/8/14

BLDG. 230 TA-50

SUBMITTED MANNY TARIN
APPROVED FOR RELEASE ED ARTIGLIA

Los Alamos NATIONAL LABORATORY PO Box 1663 Los Alamos, New Mexico 87545

SHEET E-7106
417 OF 434

CLASSIFICATION REVIEWER DATE

PROJECT ID 100761
DRAWING NO C55864
REV 0

EUGENE DAVID MOE NEW MEXICO 21369 PROFESSIONAL ENGINEER

The Location: P:\RLWTF LOW-LEVEL WASTE FACILITY\300 CAD\C53864 MAIN BUILDING\SHEETS\18 ELECTRICAL\53864-E-7106-R0.DWG
Plotted By: MOORE, STEPHEN Plot Date: Monday, May 05, 2014

12168

CONDUIT AND WIRE SCHEDULE

EQUIPMENT #	EQUIPMENT NAME	CONDUCTOR SIZE		CONDUCTOR TYPE	CONDUCTOR NUMBER	CIRCUIT LENGTH (ft)	SOURCE	CKT	CONDUIT SIZE	CONDUIT FILL CIRCUIT REF	DESTINATION
XFMR-A	13.2KV-480Y/277 750 KVA TRANSFORMER	3-#4/0	CU	MV105	XFMR-A	310	SWITCH MH 50-109	NA	6"	A15	SWBD-A
SWBD-A	480Y/277V 3-PHASE MAIN SERVICE SWITCHBOARD	3-350 KCMIL	CU	600V XHHW-2	SWBD-A	65	XFMR-A	NA	3"	A16	SWBD-A
		1-#4/0	CU	600V XHHW-2	SWBD-A						
		3-350 KCMIL	CU	600V XHHW-2	SWBD-A	65	XFMR-A	NA	3"	A16	SWBD-A
		1-#4/0	CU	600V XHHW-2	SWBD-A						
		3-350 KCMIL	CU	600V XHHW-2	SWBD-A	65	XFMR-A	NA	3"	A16	SWBD-A
		1-#4/0	CU	600V XHHW-2	SWBD-A						
		3-350 KCMIL	CU	600V XHHW-2	SWBD-A	65	XFMR-A	NA	3"	A16	SWBD-A
		1-#4/0	CU	600V XHHW-2	SWBD-A						
LP-A	175A LIGHTING PANEL	4-#4/0	AL	600V XHHW-2	SWBD-A-7	35	SWBD-A	7	2 1/2"	A13	LP-A
		1-#4 GND	CU	600V THHN/THWN	SWBD-A-7						
LP-B	150A MAIN BKR LIGHTING PANEL	4-#2/0	CU	600V XHHW-2	SWBD-A-9	80	SWBD-A	9	2"	A18	LP-B
		1-#4 GND	CU	600V XHHW-2	SWBD-A-9						
XFMR-1	75 KVA TRANSFORMER	3-#2	CU	600V THHN/THWN	SWBD-A-4	25	SWBD-A	4	1 1/4"	A10	XFMR-1
		1-#6 GND	CU	600V THHN/THWN	SWBD-A-4						
XFMR-2	45 KVA TRANSFORMER	3-#4	CU	600V THHN/THWN	SWBD-A-3	40	SWBD-A	3	1"	A9	XFMR-2
		1-#8 GND	CU	600V THHN/THWN	SWBD-A-3						
XFMR-3	45 KVA TRANSFORMER	3-#4	CU	600V THHN/THWN	SWBD-A-5	20	SWBD-A	5	1"	A9	XFMR-3
		1-#8 GND	CU	600V THHN/THWN	SWBD-A-5						
EVAP-1701	LLW EVAPORATOR PUMP SKID	4-#4/0	AL	600V XHHW-2	SWBD-A-6	60	SWBD-A	6	2 1/2"	A13	EVAP-1701
		1-#4 GND	CU	600V THHN/THWN	SWBD-A-6						
MCC-A	MOTOR CONTROL CENTER	3-#300	AL	600V XHHW-2	SWBD-A-10	30	SWBD-A	10	3"	A14	MCC-A
		1-#4 GND	CU	600V THHN/THWN	SWBD-A-10						
MCC-B	MOTOR CONTROL CENTER	3-#300	AL	600V XHHW-2	SWBD-A-8	20	SWBD-A	8	3"	A14	MCC-B
		1-#4 GND	CU	600V THHN/THWN	SWBD-A-8						
BWS-5602	EMERGENCY SHOWER HEATER	3-#2	CU	600V THHN/THWN	SWBD-A-12	60	SWBD-A	12	1 1/4"	A25	BWS-5602
		1-#8 GND	CU	600V THHN/THWN	SWBD-A-12						
PP-1	225 A MAIN BKR POWER PANEL	4-#400	AL	600V XHHW-2	XFMR-1	25	XFMR-1	NA	3"	A17	PP-1
		1-#2 GND	CU	600V XHHW-2	XFMR-1						
PP-2	175 A MAIN BKR POWER PANEL	4-#4/0	AL	600V XHHW-2	XFMR-2	10	XFMR-2	NA	2 1/2"	A13	PP-2
		1-#4 GND	CU	600V THHN/THWN	XFMR-2						
PP-3	175 A MAIN BKR POWER PANEL	4-#4/0	AL	600V XHHW-2	XFMR-3	60	XFMR-3	NA	2 1/2"	A13	PP-3
		1-#4 GND	CU	600V THHN/THWN	XFMR-3						

GENERAL NOTES

1. ALL LENGTHS ARE ESTIMATED TO THE FIRST DEVICE, SWITCH, RECEPTACLE, FIXTURE, ETC.
2. PORTIONS OF THIS DRAWING WERE PREPARED FROM THE OUTPUT OF OTHER SOFTWARE AND DO NOT CONFORM TO LANL DRAFTING STANDARDS.
3. SEE SHEETS S-7101 AND S-7102 FOR WALL PENETRATION SCHEDULE.

NO	DATE	CLASS REV	ADC	DESCRIPTION	DWN	DES	CHKD	SUB	APP

AECOM

RLWTF-UP LOW LEVEL WASTE SUBPROJECT

CONDUIT AND WIRE SCHEDULES

DRAWN: V DAVIDSON
DESIGN: S MOORE
CHECKED: D MOE
DATE: 5/8/14

BLDG. 230 TA-50

SUBMITTED: MANNY TARIN
APPROVED FOR RELEASE: ED ARTIOLIA

Los Alamos NATIONAL LABORATORY PO Box 1663 Los Alamos, New Mexico 87545

SHEET: E-7107
418 OF 434

CLASSIFICATION | REVIEWER | DATE

PROJECT ID: 100761
DRAWING NO: C55864
REV: 0

EUGENE DAVID MOE NEW MEXICO 21393 PROFESSIONAL ENGINEER 05 May 2014

File Location: P:\RLWTF LOW-LEVEL WASTE FACILITY\000 CAD\C55864 MAIN BUILDING\SHEETS\18 ELECTRICAL\S55864-E-7107-R0.DWG
Plotted By: DAVIDV, VANESSA Plot Date: Friday, May 16, 2014

99221 : 12169

CONDUIT AND WIRE SCHEDULE

EQUIPMENT #	EQUIPMENT NAME	CONDUCTOR SIZE		CONDUCTOR TYPE	CONDUCTOR NUMBER	CIRCUIT LENGTH (ft)	SOURCE	CKT	CONDUIT SIZE	CONDUIT FILL CIRCUIT REF	DESTINATION	REMARKS
BWS-5611	EMERGENCY SHOWER	3-#2	CU	600V THHN/THWN	MCC-A-1Q	50	MCC-A	1Q	1 1/4"	A25	BWS-5611	
		1-#8 GND	CU	600V THHN/THWN	MCC-A-1Q							
BWS-5608	EMERGENCY SHOWER	3-#2	CU	600V THHN/THWN	MCC-A-2W	60	MCC-A	2W	1 1/4"	A25	BWS-5608	
		1-#8 GND	CU	600V THHN/THWN	MCC-A-2W							
BWS-5601	EMERGENCY SHOWER	3-#2	CU	600V THHN/THWN	MCC-A-3M	125	MCC-A	3M	1 1/4"	A25	BWS-5601	
		1-#8 GND	CU	600V THHN/THWN	MCC-A-3M							
SKID-4322 / PAC-4301	RO CIP SKID CONTROL PANEL	3-#12	CU	600V THHN/THWN	MCC-A-3S	135	MCC-A	3S	3/4"	A2	SKID-4322	
		1-#12 GND	CU	600V THHN/THWN	MCC-A-3S							
ROU-1301 / P-1303	RO SKID #1 CONTROL PANEL	3-#10	CU	600V THHN/THWN	MCC-A-3Q	120	MCC-A	3Q	3/4"	A4	P-1303	
		1-#10 GND	CU	600V THHN/THWN	MCC-A-3Q							
PPB-5612	SAFETY SHOWER BOOSTER PUMP	3-#12	CU	600V THHN/THWN	MCC-A-3U	130	MCC-A	3U	3/4"	A2	PPB-5612	
		1-#12 GND	CU	600V THHN/THWN	MCC-A-3U							
P-1302	RO ADJUST TANK TRANSFER PUMP	3-#12	CU	600V THHN/THWN	MCC-A-1S	120	MCC-A	1S	3/4"	A2	P-1302	
		1-#12 GND	CU	600V THHN/THWN	MCC-A-1S							
P-1703	SLUDGE TH DECANT PUMP	3-#12	CU	600V THHN/THWN	MCC-A-1E	40	MCC-A	1E	3/4"	A2	P-1703	
		1-#12 GND	CU	600V THHN/THWN	MCC-A-1E							
P-1705	LLW EVAP SUPPLY PUMP	3-#12	CU	600V THHN/THWN	MCC-A-1I	90	MCC-A	1I	3/4"	A2	P-1705	
		1-#12 GND	CU	600V THHN/THWN	MCC-A-1I							
P-1706	LLW EVAP COND TRANSFER PUMP	3-#12	CU	600V THHN/THWN	MCC-A-1M	90	MCC-A	1M	3/4"	A2	P-1706	
		1-#12 GND	CU	600V THHN/THWN	MCC-A-1M							
P-1707	FILTER PRESS FILTRATE PUMP	3-#12	CU	600V THHN/THWN	MCC-A-2A	30	MCC-A	2A	3/4"	A2	P-1707	
		1#12 GND	CU	600V THHN/THWN	MCC-A-2A							
P-1201	MICROFILTRATION PUMP	3-#8	CU	600V THHN/THWN	MCC-A-3O	100	MCC-A	3O	3/4"	A6	P-1201	
		1-#10 GND	CU	600V THHN/THWN	MCC-A-3O							
FLT-1704	ROTARY PRESS	3#12	CU	600V THHN/THWN	MCC-A-3W	30	MCC-A	4A	3/4"	A2	FLT-1704	
		1#12 GND	CU	600V THHN/THWN	MCC-A-3W							
P-1407	IX FEED PUMP	3-#12	CU	600V THHN/THWN	MCC-A-2K	50	MCC-A	2K	3/4"	A2	P-1407	
		1-#12 GND	CU	600V THHN/THWN	MCC-A-2K							
P-1408	WATER REUSE PUMP	3-#12	CU	600V THHN/THWN	MCC-A-3A	55	MCC-A	3A	3/4"	A2	P-1408	
		1-#12 GND	CU	600V THHN/THWN	MCC-A-3A							
DS-5321	HVAC SUPPLY FAN DISCONNECT	3-#4	CU	600V THHN/THWN	MCC-B-2D	40	MCC-B	2D	2"	A21	DS-5321	CONDUCTORS ROUTED TOGETHER BETWEEN MCC-B AND 480VAC WIREWAY ON ROOF.
		1-#8 GND	CU	600V THHN/THWN	MCC-B-2D							
DS-5313	HEAT RECOVERY PUMP #1 DISCONNECT	3-#8	CU	600V THHN/THWN	MCC-B-3C	40	MCC-B	3C			DS-5313	
DS-5314	HEAT RECOVERY PUMP #2 DISCONNECT	3-#8	CU	600V THHN/THWN	MCC-B-2N	40	MCC-B	3M			DS-5314	
DS-5322	HVAC SUPPLY FAN DISCONNECT	3-#12	CU	600V THHN/THWN	MCC-B-1M	40	MCC-B	1A			DS-5322	
DS-5103	CIRCULATION PUMP	3-#12	CU	600V THHN/THWN	MCC-B-1E	40	MCC-B	1E			DS-5103	
HVA-5322	HVAC SUPPLY FAN DISCONNECT	3-#12	CU	600V THHN/THWN	DS-5322	30	DS-5322	NA	3/4"	A2	HVA-5322	
		1-#12 GND	CU	600V THHN/THWN	DS-5322							
PHW-5313	HEAT RECOVERY PUMP #1 DISCONNECT	3-#10	CU	600V THHN/THWN	DS-5313	140	DS-5313	NA	3/4"	A4	PHW-5313	
		1-#10 GND	CU	600V THHN/THWN	DS-5313							
PHW-5314	HEAT RECOVERY PUMP #2 DISCONNECT	3-#10	CU	600V THHN/THWN	DS-5314	125	DS-5314	NA	3/4"	A4	PHW-5314	
		1-#10 GND	CU	600V THHN/THWN	DS-5314							
HVA-5321	HVAC SUPPLY FAN DISCONNECT	3-#8	CU	600V THHN/THWN	DS-5321	105	DS-5321	NA	1"	A9	HVA-5321	
		1-#8 GND	CU	600V THHN/THWN	DS-5321							
PHW-5103	CIRCULATION PUMP	3-#12	CU	600V THHN/THWN	DS-5103	75	DS-5103	NA	3/4"	A2	HVA-5321	
		1-#12 GND	CU	600V THHN/THWN	DS-5103							

GENERAL NOTES

1. ALL LENGTHS ARE ESTIMATED TO THE FIRST DEVICE, SWITCH, RECEPTACLE, FIXTURE, ETC.
2. CONDUCTORS COMBINED IN SINGLE CONDUIT SHARE SINGLE EQUIPMENT GROUND. PROVIDE MEANS OF TERMINATING AND EXTENDING INDIVIDUAL GROUNDS IN COMMON J-BOX.
3. PORTIONS OF THIS DRAWING WERE PREPARED FROM THE OUTPUT OF OTHER SOFTWARE AND DO NOT CONFORM TO LANL DRAFTING STANDARDS.
4. SEE SHEETS S-7101 AND S-7102 FOR WALL PENETRATION SCHEDULE.

NO	DATE	CLASS REV	ADC	DESCRIPTION	DWN	DES	CHKD	SUB	APP

AECOM

RLWTF-UP LOW LEVEL WASTE SUBPROJECT

CONDUIT AND WIRE SCHEDULES

DRAWN: V DAVISON
DESIGN: S MOORE
CHECKED: G MOE
DATE: 5/8/14

BLDG. 230 TA-50

SUBMITTED: MANNY TARIN
APPROVED FOR RELEASE: ED ARTIOLIA

Los Alamos NATIONAL LABORATORY
PO Box 1663 Los Alamos, New Mexico 87545

SHEET: E-7108
419 OF 434

CLASSIFICATION | REVIEWER | DATE

PROJECT ID: 100761
DRAWING NO: C55864
REV: 0

EUGENE DAVID MOE NEW MEXICO 21369 PROFESSIONAL ENGINEER 6 May 2014

File Location: P:\RLWTF LOW-LEVEL WASTE FACILITY\300 CAD\C55864 MAIN BUILDING\SHEETS\10 ELECTRICAL\55864-E-7108-R0.DWG
Pulled By: DAVIDA, MARISOL Plot Date: Friday, May 16, 2014

621121

CONDUIT AND WIRE SCHEDULE

EQUIPMENT #	CKT	CONDUCTOR SIZE		CONDUCTOR TYPE	CONDUCTOR NUMBER	CABLE LENGTH (FT)	SOURCE	CONDUIT SIZE	CONDUIT FILL CIRCUIT REF	DESTINATION	REMARKS	
LP-A	1	3-#12	CU	600V THHN/THWN	LP-A-1	35	LP-A	3/4"	A1	RM 1000C, 1003, 1005, 1006 LIGHTS		
	3	3-#12	CU	600V THHN/THWN	LP-A-3	85	LP-A	3/4"	A1	RM 1001, 1009, 1010 LIGHTS		
	5	3-#12	CU	600V THHN/THWN	LP-A-5	50	LP-A	3/4"	A1	RM 1011 LIGHTS		
	9	3-#12	CU	600V THHN/THWN	LP-A-9	20	LP-A	3/4"	A1	BLDG EXT LIGHTS VIA LC-A		
	11,13,15	3-#12, 1-#12 GND	CU	600V THHN/THWN	LP-A-11,13,15	110	LP-A	1"	A24	RM 1018 PV-5002	ROUTED IN SINGLE CONDUIT	
	17,19,21	3-#10, 1-#10 GND	CU	600V THHN/THWN	LP-A-17,19,21	110	LP-A	1"	A24	RM 1018 PV 5001A/B/C		
	2	3-#12	CU	600V THHN/THWN	LP-A-2	60	LP-A	3/4"	A1	RM 1012 LIGHTS		
	4	3-#12	CU	600V THHN/THWN	LP-A-4	60	LP-A	3/4"	A1	RM 1000A, 1000B, 1002 LIGHTS		
	6	3-#12	CU	600V THHN/THWN	LP-A-6	90	LP-A	3/4"	A1	RM 1016, 1018 LIGHTS		
	8	3-#10	CU	600V THHN/THWN	LP-A-8	45	LP-A	1"	A26	STREET & YARD LIGHTS VIA LC-A		
	10	3-#10	CU	600V THHN/THWN	LP-A-10	45	LP-A	1"	A26	STREET & YARD LIGHTS VIA LC-A		(2)
	12,14,16	3-#4, 1-#8 GND	CU	600V THHN/THWN	LP-A-12,14,16	290	LP-A	1"	A9	PS-5000/5001		
LP-B	1	3-#12	CU	600V THHN/THWN	LP-B-1	15	LP-B	3/4"	A1	EFF SAMPLE BLDG INTERIOR LIGHTS		
	3,5,7	3-#12, 1-#12 GND	CU	600V THHN/THWN	LP-B-3,5,7	20	LP-B	3/4"	A2	TK-1501 HEATER		
	9,11,13	3-#12, 1-#12 GND	CU	600V THHN/THWN	LP-B-9,11,13	75	LP-B	3/4"	A2	P-1503		
	2	3-#12	CU	600V THHN/THWN	LP-B-2	25	LP-B	3/4"	A1	EFF SAMPLE BLDG EXTERIOR LIGHTS		
	4,6,8	3-#12, 1-#12 GND	CU	600V THHN/THWN	LP-B-4,6,8	20	LP-B	3/4"	A2	TK-1502 HEATER		
	10,12	2-#8, 1-#10 GND	CU	600V THHN/THWN	LP-B-10,12	10	LP-B	3/4"	A5	XFMR-5		
	15,17,19	3-#2, 1-#8 GND	CU	600V THHN/THWN	LP-B-15,17,19	20	LP-B	1 1/4"	A25	BWS-5612		
PP-1	1	3-#12	CU	600V THHN/THWN	PP-1-1	70	PP-1	3/4"	A1	RM 1016 FACP		
	3	3-#12	CU	600V THHN/THWN	PP-1-3	35	PP-1	3/4"	A1	RM 1000 ACCESS CONTROL SYSTEM		
	5	3-#12	CU	600V THHN/THWN	PP-1-5	25	PP-1	1"	A20	RM 1001 FCS PRINTER RECEPTACLE		
	7	3-#12	CU	600V THHN/THWN	PP-1-7	25	PP-1	1"	A20	RM 1001 OWS-1 RECEPTACLE	ROUTED IN SINGLE CONDUIT	
	9	3-#12	CU	600V THHN/THWN	PP-1-9	25	PP-1	1"	A20	RM 1001 EWS RECEPTACLE		
	11	3-#12	CU	600V THHN/THWN	PP-1-11	25	PP-1	1"	A20	RM 1001 RAD MONITORING RECEPTACLES		
	13	3-#12	CU	600V THHN/THWN	PP-1-13	25	PP-1	1"	A20	RM 1001 RECEPTACLES	ROUTED IN SINGLE CONDUIT	
	15	3-#12	CU	600V THHN/THWN	PP-1-15	40	PP-1	1"	A20	RM 1001 CAB-100		
	17	3-#12	CU	600V THHN/THWN	PP-1-17	55	PP-1	3/4"	A1	RM 1000C WATER COOL RECEPTACLE		
	19,21	3-#10	CU	600V THHN/THWN	PP-1-19,21	75	PP-1	3/4"	A3	RM 1018 ACR-5328		
	23,25	3-#12	CU	600V THHN/THWN	PP-1-23,25	50	PP-1	3/4"	A23	RM 1012 ICP-MS-ROUGHING PUMP	ROUTED IN SINGLE CONDUIT	
	27,29	3-#12	CU	600V THHN/THWN	PP-1-27,29	70	PP-1	3/4"	A23	RM 1012 ICP-MS COOLING SYSTEM		
	31	3-#12	CU	600V THHN/THWN	PP-1-31	40	PP-1	1"	A22	EXTERIOR SOUTH AND ROOF RECEPTACLES		
	33,35	3-#12	CU	600V THHN/THWN	PP-1-33,35	50	PP-1	1"	A22	RM 1002 ACR-5326	ROUTED IN SINGLE CONDUIT	
	37,39	3-#12	CU	600V THHN/THWN	PP-1-37,39	50	PP-1	1"	A22	RM 1002 ACR-5327		
	41	3-#12	CU	600V THHN/THWN	PP-1-41	60	PP-1	1"	A22	ROOF HEAT TRACE		
	43,45	3-#12	CU	600V THHN/THWN	PP-1-43,45	60	PP-1	3/4"	A1	RM 1009 PS-5700		
	47	3-#12	CU	600V THHN/THWN	PP-1-47	60	PP-1	1"	A22	ROOF FE-5326	ROUTED IN SINGLE CONDUIT	(1)
	2	3-#12	CU	600V THHN/THWN	PP-1-2	50	PP-1	3/4"	A1	RM 1016, 1018 RECEPTACLES		
	4	3-#12	CU	600V THHN/THWN	PP-1-4	25	PP-1	3/4"	A1	RM 1006 FE-5323		
	6	3-#12	CU	600V THHN/THWN	PP-1-6	25	PP-1	3/4"	A1	RM 1000C, 1003, 1005, 1006 RECEPTACLES		
	8	3-#12	CU	600V THHN/THWN	PP-1-8	45	PP-1	3/4"	A1	RM 1000A, 1014 RECEPTACLES		
	10	3-#12	CU	600V THHN/THWN	PP-1-10	50	PP-1	1"	A22	RM 1002 COMM RACK #2 RECEPTACLES		
	12	3-#12	CU	600V THHN/THWN	PP-1-12	50	PP-1	1"	A22	RM 1002 COMM RACK #1 RECEPTACLES	ROUTED IN SINGLE CONDUIT	
	14	3-#12	CU	600V THHN/THWN	PP-1-14	50	PP-1	1"	A22	RM 1002 COMM RACK #1 RECEPTACLES		
	16	3-#12	CU	600V THHN/THWN	PP-1-16	50	PP-1	1"	A22	RM 1002 COMM RACK #2 RECEPTACLES		
	18	3-#12	CU	600V THHN/THWN	PP-1-18	50	PP-1	1"	A22	RM 1002 RECEPTACLES		
	20	3-#12	CU	600V THHN/THWN	PP-1-20	50	PP-1	1"	A22	RM 1002 RECEPTACLES	ROUTED IN SINGLE CONDUIT	
	22	3-#12	CU	600V THHN/THWN	PP-1-22	50	PP-1	1"	A22	RM 1002 RECEPTACLES		
	24	3-#12	CU	600V THHN/THWN	PP-1-24	50	PP-1	1"	A22	RM 1002 PAGING AMP		
	26	3-#12	CU	600V THHN/THWN	PP-1-26	45	PP-1	3/4"	A1	CAV-5333, CAV-5334, CAV-5336, CAV-5338		
	28	3-#12	CU	600V THHN/THWN	PP-1-28	45	PP-1	3/4"	A1	CAV-5335, CAV-5337, CAV-5339		
	30,32	3-#12	CU	600V THHN/THWN	PP-1-30,32	55	PP-1	3/4"	A1	RM 1012 WATER PURIFICATION SYSTEM		
	34,36	3-#12	CU	600V THHN/THWN	PP-1-34,36	45	PP-1	3/4"	A1	RM 1000 BDE-5341		
	38,40	3-#12	CU	600V THHN/THWN	PP-1-38,40	55	PP-1	3/4"	A1	RM 1016 BDE-5342		
	42	3-#12	CU	600V THHN/THWN	PP-1-42	55	PP-1	3/4"	A1	XC-5501		
	44	3-#12	CU	600V THHN/THWN	PP-1-44	25	PP-1	3/4"	A1	BAS-3		

GENERAL NOTES

1. ALL LENGTHS ARE ESTIMATED TO THE FIRST DEVICE, SWITCH, RECEPTACLE, FIXTURE, ETC.
2. CONDUCTORS COMBINED IN SINGLE CONDUIT SHARE SINGLE EQUIPMENT GROUND. PROVIDE MEANS OF TERMINATING AND EXTENDING INDIVIDUAL GROUNDS IN COMMON J-BOX.
3. PORTIONS OF THIS DRAWING WERE PREPARED FROM THE OUTPUT OF OTHER SOFTWARE AND DO NOT CONFORM TO LANL DRAFTING STANDARDS.
4. SEE SHEETS S-7101 AND S-7102 FOR WALL PENTRATION SCHEDULE.

KEYED NOTES

(1) CONDUCTORS FOR CIRCUIT 47 PLUS 9 SPARE CONDUCTORS (3H, 3N, 3GND) ROUTED TOGETHER IN SINGLE CONDUIT FROM POWER PANEL PP-1 TO 120VAC J-BOX ON ROOF.

(2) EXTERIOR STREET AND YARD LIGHTS CIRCUIT 8 AND 10 TO BE ROUTED IN SINGLE 1" CONDUIT.

NO	DATE	CLASS REV	ADC	DESCRIPTION	DWN	DES	CHKD	SUB	APP

AECOM

RLWTF-UP LOW LEVEL WASTE SUBPROJECT

CONDUIT AND WIRE SCHEDULES

DRAWN V DAVISON
DESIGN S MOORE
CHECKED G MOE
DATE 5/8/14

BLDG. 230 TA-50

SUBMITTED MANNY TARIN

APPROVED FOR RELEASE ED ARTIGLIA

Los Alamos NATIONAL LABORATORY PO Box 1663 Los Alamos, New Mexico 87545

SHEET E-7109
420 OF 434

CLASSIFICATION REVIEWER DATE

PROJECT ID 100761 DRAWING NO C55864 REV 0

EUGENE DAVID MOE 21289 STATE OF NEW MEXICO PROFESSIONAL ENGINEER 5/7/14

File Location: P:\RLWTF LOW-LEVEL WASTE FACILITY\500 CAD\C55864 MAIN BUILDING\SHEETS\16 ELECTRICAL\55864-E-7109-RO.DWG
Plotted By: DARDA, WANDA Plot Date: Friday, May 16, 2014

5/7/14

CONDUIT AND WIRE SCHEDULE

EQUIPMENT #	CKT	CONDUCTOR SIZE		CONDUCTOR TYPE	CONDUCTOR NUMBER	CABLE LENGTH (FT)	SOURCE	CONDUIT SIZE	CONDUIT FILL CIRCUIT REF	DESTINATION	REMARKS
PP-2	1	3-#12	CU	600V THHN/THWN	PP-2-1	25	PP-2	3/4"	A1	ROLLUP DOOR	
	3	3-#12	CU	600V THHN/THWN	PP-2-3	75	PP-2	3/4"	A1	P-4001, HS-4001	
	5	3-#12	CU	600V THHN/THWN	PP-2-5	75	PP-2	3/4"	A1	P-4002, HS4002	
	7	3-#12	CU	600V THHN/THWN	PP-2-7	80	PP-2	3/4"	A1	P-4003, P-4006, P-4007	
	9	3-#12	CU	600V THHN/THWN	PP-2-9	50	PP-2	3/4"	A1	P-4010, P-4011	
	13	3-#12	CU	600V THHN/THWN	PP-2-13	20	PP-2	3/4"	A1	RM 1011 RECEPTACLES	
	15	3-#12	CU	600V THHN/THWN	PP-2-15	60	PP-2	3/4"	A1	CAV-5331, 5332	
	17	3-#12	CU	600V THHN/THWN	PP-2-17	85	PP-2	3/4"	A1	CAB-102	
	19	3-#12	CU	600V THHN/THWN	PP-2-19	50	PP-2	3/4"	A1	CAB-101	
	21	3-#12	CU	600V THHN/THWN	PP-2-21	45	PP-2	3/4"	A1	RM 1011 RECEPTACLES	
	23	3-#12	CU	600V THHN/THWN	PP-2-23	60	PP-2	3/4"	A1	ENC-1701	
	25	3-#12	CU	600V THHN/THWN	PP-2-25	20	PP-2	3/4"	A1	ENC-1703	
	27	3-#12	CU	600V THHN/THWN	PP-2-27	45	PP-2	3/4"	A1	ENC-1702	
	6	3-#12	CU	600V THHN/THWN	PP-2 6	85	PP-2	3/4"	A1	MC-1101	
	8	3-#12	CU	600V THHN/THWN	PP-2-8	65	PP-2	3/4"	A1	FLT-1101	
	10	3-#12	CU	600V THHN/THWN	PP-2-10	105	PP-2	3/4"	A1	MC-1301	
	12	3-#12	CU	600V THHN/THWN	PP-2-12	25	PP-2	3/4"	A1	MC-1702	
	14	3-#12	CU	600V THHN/THWN	PP-2-14	20	PP-2	3/4"	A1	MC-1704	
	16	3-#12	CU	600V THHN/THWN	PP-2-16	60	PP-2	3/4"	A1	MC-1705	
	18	3-#12	CU	600V THHN/THWN	PP-2-18	30	PP-2	3/4"	A1	HFM RECEPTACLE	
	20	3-#12	CU	600V THHN/THWN	PP-2-20	55	PP-2	3/4"	A1	BAS-1	
	22	3-#12	CU	600V THHN/THWN	PP-2-22	25	PP-2	3/4"	A1	CAM RECEPTACLES	
	24	3-#12	CU	600V THHN/THWN	PP-2-24	40	PP-2	3/4"	A1	CAM RECEPTACLES	
PP-3	1	3-#12	CU	600V THHN/THWN	PP-3-1	35	PP-3	3/4"	A1	RM 1012 FUME HOOD	
	3	3-#12	CU	600V THHN/THWN	PP-3-3	75	PP-3	3/4"	A1	RM 1012 FUME HOOD	
	5	3-#12	CU	600V THHN/THWN	PP-3-5	45	PP-3	3/4"	A1	RM 1012 REFRIGERATOR RECEPTACLE	
	9	3-#12	CU	600V THHN/THWN	PP-3-9	25	PP-3	3/4"	A1	RM 1012 DISHWASHER	
	11,13	3-#10	CU	600V THHN/THWN	PP-3-11,13	10	PP-3	3/4"	A3	RM 1012 MASS SPEC	
	15	3-#12	CU	600V THHN/THWN	PP-3-15	50	PP-3	3/4"	A1	RM 1012 LAB BENCH RECEPTACLES	
	17	3-#12	CU	600V THHN/THWN	PP-3-17	75	PP-3	3/4"	A1	RM 1012 LAB BENCH RECEPTACLES	
	19	3-#12	CU	600V THHN/THWN	PP-3-19	65	PP-3	3/4"	A1	RM 1012 WORKSTATION	
	21	3-#12	CU	600V THHN/THWN	PP-3-21	35	PP-3	3/4"	A1	RM 1012 WORKSTATION	
	23	3-#12	CU	600V THHN/THWN	PP-3-23	45	PP-3	3/4"	A1	RM 1012 VACUUM PUMP	
	25	3-#12	CU	600V THHN/THWN	PP-3-25	15	PP-3	3/4"	A1	RM 1012 LAB BENCH RECEPTACLES	
	27	3-#12	CU	600V THHN/THWN	PP-3-27	30	PP-3	3/4"	A1	RM 1009 PCM-1	
	29	3-#12	CU	600V THHN/THWN	PP-3-29	45	PP-3	3/4"	A1	RM 1009 PCM-2	
	2	3-#12	CU	600V THHN/THWN	PP-3-2	45	PP-3	3/4"	A1	RM 1012 FUME HOOD	
	4	3-#12	CU	600V THHN/THWN	PP-3-4	75	PP-3	3/4"	A1	RM 1012 FUME HOOD	
	6	3-#12	CU	600V THHN/THWN	PP-3-6	60	PP-3	3/4"	A1	RM 1012 REFRIGERATOR RECEPTACLE	
	10	3-#12	CU	600V THHN/THWN	PP-3-10	15	PP-3	3/4"	A1	RM 1009, 1010, 1012 RECEPTACLES	
	12	3-#12	CU	600V THHN/THWN	PP-3-12	60	PP-3	3/4"	A1	RM 1012 LAB BENCH RECEPTACLES	
	14	3-#12	CU	600V THHN/THWN	PP-3-14	45	PP-3	3/4"	A1	RM 1012 LAB BENCH RECEPTACLES	
	16	3-#12	CU	600V THHN/THWN	PP-3-16	50	PP-3	3/4"	A1	RM 1012 WORKSTATION	
	18	3-#12	CU	600V THHN/THWN	PP-3-18	45	PP-3	3/4"	A1	RM 1012 WORKSTATION	
	20	3-#12	CU	600V THHN/THWN	PP-3-20	70	PP-3	3/4"	A1	RM 1012 WORKSTATION	
	22	3-#12	CU	600V THHN/THWN	PP-3-22	70	PP-3	3/4"	A1	RM 1012 ION CHROMAT	
	24	3-#12	CU	600V THHN/THWN	PP-3-24	30	PP-3	3/4"	A1	RM 1012 CAM RECEPTACLES	
	26	3-#12	CU	600V THHN/THWN	PP-3-26	25	PP-3	3/4"	A1	RM 1012 OXYGEN MONITOR	
	28	3-#12	CU	600V THHN/THWN	PP-3-28	25	PP-3	3/4"	A1	RM 1012 LIQUID SCINTILATION CTR	
	30,32	3-#12	CU	600V THHN/THWN	PP-3-30,32	30	PP-3	3/4"	A1	RM 1012 HWE-5900	
PP-5	1	3-#12	CU	600V THHN/THWN	PP-5-1	20	PP-5	3/4"	A1	RECEPTACLE	
	3	3-#12	CU	600V THHN/THWN	PP-5-3	20	PP-5	3/4"	A1	P-4012, P-4013	
	5	3-#12	CU	600V THHN/THWN	PP-5-5	25	PP-5	3/4"	A1	HEAT TRACE	
	7	3-#12	CU	600V THHN/THWN	PP-5-7	25	PP-5	3/4"	A1	HEAT TRACE	
	9,11	3-#10	CU	600V THHN/THWN	PP-5-9,11	25	PP-5	3/4"	A3	BDE-5343	
	4	3-#12	CU	600V THHN/THWN	PP-5-4	10	PP-5	3/4"	A1	CAB-104	
	6,8	3-#12	CU	600V THHN/THWN	PP-5-6,8	15	PP-5	3/4"	A1	ACR-5329	
	10	3-#12	CU	600V THHN/THWN	PP-5-10	30	PP-5	3/4"	A1	LI-5707	

GENERAL NOTES

1. ALL LENGTHS ARE ESTIMATED TO THE FIRST DEVICE, SWITCH, RECEPTACLE, FIXTURE, ETC.
2. PORTIONS OF THIS DRAWING WERE PREPARED FROM THE OUTPUT OF OTHER SOFTWARE AND DO NOT CONFORM TO LANL DRAFTING STANDARDS.
3. SEE SHEETS S-7101 AND S-7102 FOR WALL PENETRATION SCHEDULE.

NO	DATE	CLASS REV	ADC	DESCRIPTION	DWN	DES	CHKD	SUB	APP

AECOM

RLWTF-UP LOW LEVEL WASTE SUBPROJECT

CONDUIT AND WIRE SCHEDULES

BLDG. 230 TA-50

DRAWN	V DAVISON
DESIGN	S MOORE
CHECKED	G MOE
DATE	5/8/14

SUBMITTED MANNY TARIN

APPROVED FOR RELEASE ED ARTIOLIA

Los Alamos NATIONAL LABORATORY PO Box 1663 Los Alamos, New Mexico 87545

SHEET E-7110

421 OF 434

CLASSIFICATION | REVIEWER | DATE

PROJECT ID 100761 | DRAWING NO C55864 | REV 0

EUGENE DAVID MOE NEW MEXICO 21389 PROFESSIONAL ENGINEER 5/14/2014

File Location: P:\RLWTF LOW-LEVEL WASTE FACILITY\500 DAV\C55864 MAIN BUILDING\SHEETS\18 ELECTRICAL\55864-E-7110-RD.DWG
Plotted By: DAVISON, WANDA Plot Date: Friday, May 16, 2014

12172 : 12172

CABLE I.D. PER BLOCK DIAGRAM (1)	CABLE NUMBER	CABLE INFORMATION				ROUTING INFORMATION						APPROXIMATE CABLE LENGTH (FEET) (2)
						FROM			TO			
		TYPE	DESCRIPTION	SIZE (AWG)	MANUFACTURER	LOCATION	CABINET	TERMINATION	LOCATION	CABINET/JB	TERMINATION	
C-1	CAB101/ESW03-CAB100/ESW02	ETHERNET	CAT 5e	#24	BELDEN	BLDG 230 OPS CENTER	CAB-100	E-SW02	BLDG 230 PROCESS AREA	CAB-101	E-SW03	50
C-2	CAB102/ESW04-CAB100/ESW02	ETHERNET	CAT 5e	#24	BELDEN	BLDG 230 OPS CENTER	CAB-100	E-SW02	BLDG 230 PROCESS AREA	CAB-102	E-SW04	50
C-3	MCCA-CAB101/ESW03	ETHERNET	CAT 5e	#24	BELDEN	BLDG 230 PROCESS AREA	CAB-101	E-SW03	BLDG 230 PROCESS AREA	MCC-A	---	50
C-4	SWBDA-CAB100/ESW02	ETHERNET	CAT 5e	#24	BELDEN	BLDG 230 OPS CENTER	CAB-100	E-SW02	BLDG 230 ELECTRIC RM	SWBD-A	---	50
C-5	MCCB-CAB100/ESW02	ETHERNET	CAT 5e	#24	BELDEN	BLDG 230 OPS CENTER	CAB-100	E-SW02	BLDG 230 ELECTRIC RM	MCC-B	---	50
C-6	CAB103/ESW06-CAB100/ESW02	ETHERNET	CAT 5e	#24	BELDEN	BLDG 230 OPS CENTER	CAB-100	E-SW02	BLDG 251 UTILITY BLDG.	CAB-103	E-SW06	250
C-7	OWS2-CAB100/ESW01	ETHERNET	CAT 5e	#24	BELDEN	BLDG 230 OPS CENTER	CAB-100	E-SW01	BLDG 251 UTILITY BLDG.	BAS-2	OWS-2	250
C-8	MCCC-CAB103/ESW06	ETHERNET	CAT 5e	#24	BELDEN	BLDG 251 UTILITY BLDG	CAB-103	E-SW06	BLDG 251 UTILITY BLDG.	MCC-C	---	50
C-9	CAB103/ESW06-BAS2	ETHERNET	CAT 5e	#24	BELDEN	BLDG 251 UTILITY BLDG	BAS-2	E-SW07	BLDG 251 UTILITY BLDG.	CAB-103	GTWAY	50
C-10	CPO/FC03-CAB100/FC01	ETHERNET	FIBER	62.5 um	CORNING	BLDG 230 OPS CENTER	CAB-100	FC-01	BLDG 250 INFLUENT STORAGE	CPO	FC-03	650
C-11	CAB104-CAB100/ESW02	ETHERNET	CAT 5e	#24	BELDEN	BLDG 230 OPS CENTER	CAB-100	E-SW02	BLDG 261 EFFLUENT SAMPLE	CAB-104	---	100
C-12	BAS1-CAB100/ESW02	ETHERNET	CAT 5e	#24	BELDEN	BLDG 230 OPS CENTER	CAB-100	E-SW02	BLDG 230 PROCESS AREA	BAS-1	E-SW05	75
C-13	FACP/RS485-ANN/RS485	I/O CABLE	1 TSP	#16	BELDEN	BLDG 230 OPS CENTER	ANN	RS485	BLDG 230 FIRE RISER ROOM	FACP	RS485	70
C-14	CAB100/ESW01-ASE	ETHERNET	CAT 5e	#24	BELDEN	BLDG 230 OPS CENTER	CAB-100	E-SW01	STACK	ASE	---	225
C-15	BAS3-CAB100/ESW02	ETHERNET	CAT 5e	#24	BELDEN	BLDG 230 OPS CENTER	CAB-100	E-SW02	BLDG 230 ELECTRIC RM.	BAS-3	---	50
C-16	RO/CAB100/ESW02	ETHERNET	CAT 5e	#24	BELDEN	BLDG 230 OPS CENTER	CAB-100	E-SW02	BLDG 230 PROCESS AREA	RO	---	50
C-17	MICROFILTER/CAB100/ESW02	ETHERNET	CAT 5e	#24	BELDEN	BLDG 230 OPS CENTER	CAB-100	E-SW02	BLDG 230 PROCESS AREA	MICROFILTER	---	50
C-18	EVAPORATOR/CAB100/ESW02	ETHERNET	CAT 5e	#24	BELDEN	BLDG 230 OPS CENTER	CAB-100	E-SW02	BLDG 230 PROCESS AREA	EVAPORATOR	---	50
---	101-CAB101/C1	I/O CABLE	12 TSP	#18	BELDEN	BLDG 230 PROCESS AREA	CAB-101	I/O MODULES	BLDG 230 PROCESS AREA	WB-101	TB-1	50
---	101-CAB101/C2	I/O CABLE	12 TSP	#18	BELDEN	BLDG 230 PROCESS AREA	CAB-101	I/O MODULES	BLDG 230 PROCESS AREA	WB-101	TB-2	50
---	101-CAB101/C3	I/O CABLE	12 TSP	#18	BELDEN	BLDG 230 PROCESS AREA	CAB-101	I/O MODULES	BLDG 230 PROCESS AREA	WB-101	TB-3	50
---	101-CAB101/C4	I/O CABLE	12 TSP	#18	BELDEN	BLDG 230 PROCESS AREA	CAB-101	I/O MODULES	BLDG 230 PROCESS AREA	WB-101	TB-4	50
---	101-CAB101/P1	DC POWER	1 UTP	#16	BELDEN	BLDG 230 PROCESS AREA	CAB-101	PB-1, RTN-1	BLDG 230 PROCESS AREA	WB-101	PB-1, RTN-1	50
---	102-CAB101/C1	I/O CABLE	12 TSP	#18	BELDEN	BLDG 230 PROCESS AREA	CAB-101	I/O MODULES	BLDG 230 PROCESS AREA	WB-102	TB-1	25
---	102-CAB101/C2	I/O CABLE	12 TSP	#18	BELDEN	BLDG 230 PROCESS AREA	CAB-101	I/O MODULES	BLDG 230 PROCESS AREA	WB-102	TB-2	25
---	102-CAB101/C3	I/O CABLE	12 TSP	#18	BELDEN	BLDG 230 PROCESS AREA	CAB-101	I/O MODULES	BLDG 230 PROCESS AREA	WB-102	TB-3	25
---	102-CAB101/P1	DC POWER	1 UTP	#16	BELDEN	BLDG 230 PROCESS AREA	CAB-101	PB-1, RTN-1	BLDG 230 PROCESS AREA	WB-102	PB-1, RTN-1	25
---	107-CAB101/C1	I/O CABLE	12 TSP	#18	BELDEN	BLDG 230 PROCESS AREA	CAB-101	I/O MODULES	BLDG 230 PROCESS AREA	WB-107	TB-1	50
---	107-CAB101/C2	I/O CABLE	12 TSP	#18	BELDEN	BLDG 230 PROCESS AREA	CAB-101	I/O MODULES	BLDG 230 PROCESS AREA	WB-107	TB-2	50
---	107-CAB101/C3	I/O CABLE	12 TSP	#18	BELDEN	BLDG 230 PROCESS AREA	CAB-101	I/O MODULES	BLDG 230 PROCESS AREA	WB-107	TB-3	50
---	107-CAB101/C4	I/O CABLE	12 TSP	#18	BELDEN	BLDG 230 PROCESS AREA	CAB-101	I/O MODULES	BLDG 230 PROCESS AREA	WB-107	TB-4	50
---	107-CAB101/C5	I/O CABLE	12 TSP	#18	BELDEN	BLDG 230 PROCESS AREA	CAB-101	I/O MODULES	BLDG 230 PROCESS AREA	WB-107	TB-5	50
---	107-CAB101/P1	DC POWER	1 UTP	#16	BELDEN	BLDG 230 PROCESS AREA	CAB-101	PB-1, RTN-1	BLDG 230 PROCESS AREA	WB-107	PB-1, RTN-1	50
---	103-CAB102/C1	I/O CABLE	12 TSP	#18	BELDEN	BLDG 230 PROCESS AREA	CAB-102	I/O MODULES	BLDG 230 PROCESS AREA	WB-103	TB-1	50
---	103-CAB102/C2	I/O CABLE	12 TSP	#18	BELDEN	BLDG 230 PROCESS AREA	CAB-102	I/O MODULES	BLDG 230 PROCESS AREA	WB-103	TB-2	50
---	103-CAB102/C3	I/O CABLE	12 TSP	#18	BELDEN	BLDG 230 PROCESS AREA	CAB-102	I/O MODULES	BLDG 230 PROCESS AREA	WB-103	TB-3	50
---	103-CAB102/P1	DC POWER	1 UTP	#16	BELDEN	BLDG 230 PROCESS AREA	CAB-102	PB-1, RTN-1	BLDG 230 PROCESS AREA	WB-103	PB-1, RTN-1	50
---	105-CAB102/C1	I/O CABLE	12 TSP	#18	BELDEN	BLDG 230 PROCESS AREA	CAB-102	I/O MODULES	BLDG 230 PROCESS AREA	WB-105	TB-1	50
---	105-CAB102/C2	I/O CABLE	12 TSP	#18	BELDEN	BLDG 230 PROCESS AREA	CAB-102	I/O MODULES	BLDG 230 PROCESS AREA	WB-105	TB-2	50
---	105-CAB102/C3	I/O CABLE	12 TSP	#18	BELDEN	BLDG 230 PROCESS AREA	CAB-102	I/O MODULES	BLDG 230 PROCESS AREA	WB-105	TB-3	50
---	105-CAB102/C4	I/O CABLE	12 TSP	#18	BELDEN	BLDG 230 PROCESS AREA	CAB-102	I/O MODULES	BLDG 230 PROCESS AREA	WB-105	TB-4	50
---	105-CAB102/P1	DC POWER	1 UTP	#16	BELDEN	BLDG 230 PROCESS AREA	CAB-102	PB-1, RTN-1	BLDG 230 PROCESS AREA	WB-105	PB-1, RTN-1	50
---	106-CAB102/C1	I/O CABLE	12 TSP	#18	BELDEN	BLDG 230 PROCESS AREA	CAB-102	I/O MODULES	BLDG 230 PROCESS AREA	WB-106	TB-1	50
---	106-CAB102/C2	I/O CABLE	12 TSP	#18	BELDEN	BLDG 230 PROCESS AREA	CAB-102	I/O MODULES	BLDG 230 PROCESS AREA	WB-106	TB-2	50
---	106-CAB102/P1	DC POWER	1 UTP	#16	BELDEN	BLDG 230 PROCESS AREA	CAB-102	PB-1, RTN-1	BLDG 230 PROCESS AREA	WB-106	PB-1, RTN-1	50
---	104-CAB100/C1	I/O CABLE	12 TSP	#18	BELDEN	BLDG 230 OPS CENTER	CAB-100	I/O MODULES	BLDG 230 LIFT STATION AREA	WB-104	TB-1	350

GENERAL NOTES

1. CABLES FROM FIELD DEVICES TO CABINET TERMINAL STRIPS TO BE FIELD WIRED, AND ARE NOT INCLUDED.
2. CABLES WITHIN CABINETS ARE NOT INCLUDED.
3. CAT5e CABLES FORM MEDIA CONVERTERS TO ETHERNET SWITCHES OR COMPUTERS ARE NOT INCLUDED.
4. FOR CABLE AND CONDUIT ROUTING OF TREATMENT BUILDING SEE DRAWING C55864, SHEET E-1130 AND E-1131.
5. FOR CABLE AND CONDUIT ROUTING OF UTILITY BUILDING SEE DRAWING C55865, SHEET E-1210.
6. FOR CABLE AND CONDUIT ROUTING OF EFFLUENT SAMPLE BUILDING SEE DRAWING C55867 SHEET E-1404.

KEYED NOTES

(1) REFER TO DRAWING C55864, SHEET E-6140, "CONTROL SYSTEM BLOCK DIAGRAM".

(2) CABLES AND CONDUIT TO BE FIELD ROUTED FOR INSTALLATION. FINAL LENGTH MAY VARY.

CABLE TYPE	
DESCRIPTION	SPECIFICATION
ETHERNET CAT5e CABLE, 4 TWISTED PAIR, 24 AWG, CMP	40 9500 00, 2.2.E
FIBER OPTIC CABLE, 12-STRAND, 62.5-MICRON MULTIMODE, INDOOR/OUTDOOR, RISER, ARMORED, GEL-FREE	40 9500 00, 2.2.E
I/O CABLE, 12 TSP, 18 AWG, CMG	40 9500 00, 2.2.E
24 VDC INSTRUMENT POWER CABLE, 1 UTP, 16 AWG	40 9500 00, 2.2.E

NO	DATE	CLASS REV	ADC	DESCRIPTION	DWN	DES	CHKD	SUB	APP

AECOM

RLWTF-UP LOW LEVEL WASTE SUBPROJECT

CABLE SCHEDULES

DRAWN V DAVISON
DESIGN S MOORE
CHECKED G MOE
DATE 5/8/14

BLDG. 230 TA-50

SUBMITTED MANNY TARIN
APPROVED FOR RELEASE ED ARTIGLIA

Los Alamos NATIONAL LABORATORY PO Box 1663 Los Alamos, New Mexico 87545

SHEET E-7120
422 OF 434

CLASSIFICATION REVIEWER DATE

PROJECT ID 100761
DRAWING NO C55864
REV 0

EUGENE DAVID MOE NEW MEXICO 21389 PROFESSIONAL ENGINEER

E7120

File Location: P:\RLWTF LOW-LEVEL WASTE FACILITY\300 CAD\C55864 MAIN BUILDING\SHEETS\10 ELECTRICAL\55864-E-7120-R0.DWG
Plotted By: MOORE, STEPHEN Plot Date: Monday, May 05, 2014

RADIATION MONITORING SYSTEM CABLE SCHEDULE

CABLE NUMBER	CABLE TYPE (2)	FROM	VIA RACEWAY	TO	APPROXIMATE LENGTH (FEET) (1)
ASM 1	1	ROOM 1001	3/4" CONDUIT	CAM 5010, CAM 5011	85
ASM 2	1	ROOM 1001	3/4" CONDUIT	CAM 5015, CAM 5014, CAM 5013, CAM 5012	200
ASM 3	1	ROOM 1001	3/4" CONDUIT	CAM 5016, CAM 5017, CAM 5018, CAM 5019	170

PAGING SYSTEM CABLE SCHEDULE

CABLE NUMBER	CABLE TYPE (2)	FROM	VIA RACEWAY (4)	TO PAGING SPEAKER	APPROXIMATE LENGTH (FEET) (1)
PS010	5	PAGING AMP	1" CONDUIT	PS011, PS012, PS013, PS014, PS015, PS016	115
PS020	5	PAGING AMP	1" CONDUIT	PS021, PS022, PS023, PS024	85
PS030	5	PAGING AMP	1" CONDUIT	PS032, PS033, PS034, PS035	110
PS040	5	PAGING AMP	1" CONDUIT	PS041, PS042, PS043, PS044	120
PS050	3	PAGING AMP	1" CONDUIT	PS051, PS052, PS053, PS054	170
PS100	8	PAGING AMP	1" CONDUIT	PS101, PS102	70
PS110	4	PAGING AMP	1" CONDUIT	PS111, PS112	305
PS120	4	PAGING AMP	1" CONDUIT	PS121, PS122	310

TELECOMMUNICATION SYSTEM CABLE SCHEDULE

CABLE NUMBER	CABLE TYPE (2) (3)	FROM	VIA RACEWAY	TO	APPROXIMATE LENGTH (FEET) (1)
T1011	2	COMM ROOM 1002	1 1/4" CONDUIT	ROOM 1011	90
T1016	(6)	COMM ROOM 1002	1" CONDUIT	ROOM 1016	120
T1014	2	COMM ROOM 1002	1 1/4" CONDUIT	ROOM 1014	45
T1000-1	2	COMM ROOM 1002	1 1/4" CONDUIT	ROOM 1000	35
T1000-2	2	COMM ROOM 1002	1 1/4" CONDUIT	ROOM 1000	20
T1000-3	2	COMM ROOM 1002	1 1/4" CONDUIT	ROOM 1000	30
T1001-1	2	COMM ROOM 1002	1 1/4" CONDUIT	ROOM 1001	75
T1001-2	2	COMM ROOM 1002	1 1/4" CONDUIT	ROOM 1001	65
T1001-3	2	COMM ROOM 1002	1 1/4" CONDUIT	ROOM 1001	50
T1001-4	2	COMM ROOM 1002	1 1/4" CONDUIT	ROOM 1001	45
T1001-5	2	COMM ROOM 1002	1 1/4" CONDUIT	ROOM 1001	65
T1002	2	COMM ROOM 1002	1" CONDUIT	ROOM 1002	10
T1009-1	2	COMM ROOM 1002	1 1/4" CONDUIT	ROOM 1009	40
T1009-2	2	COMM ROOM 1002	1 1/4" CONDUIT	ROOM 1009	50
T1009-3	2	COMM ROOM 1002	1 1/4" CONDUIT	ROOM 1009	70
T1009-4	2	COMM ROOM 1002	1 1/4" CONDUIT	ROOM 1009	50
T1009-5	2	COMM ROOM 1002	1" CONDUIT	ROOM 1009	55
T1009-6	2	COMM ROOM 1002	1" CONDUIT	ROOM 1009	55
T1011-1	2	COMM ROOM 1002	1" CONDUIT	ROOM 1011	90
T1011-2	2	COMM ROOM 1002	1" CONDUIT	ROOM 1011	90
T1012-1	2	COMM ROOM 1002	1 1/4" CONDUIT	ROOM 1012	85
T1012-2	2	COMM ROOM 1002	1 1/4" CONDUIT	ROOM 1012	80
T1012-3	2	COMM ROOM 1002	1 1/4" CONDUIT & LAB CASEWORK WIREWAY	ROOM 1012	95 (5)
T1012-4	2	COMM ROOM 1002	1 1/4" CONDUIT & LAB CASEWORK WIREWAY	ROOM 1012	80
T1012-5	2	COMM ROOM 1002	1 1/4" CONDUIT & LAB CASEWORK WIREWAY	ROOM 1012	75
T1012-6	2	COMM ROOM 1002	1 1/4" CONDUIT & LAB CASEWORK WIREWAY	ROOM 1012	95
T1012-7	2	COMM ROOM 1002	1 1/4" CONDUIT & LAB CASEWORK WIREWAY	ROOM 1012	120
TD001	7	COMM ROOM 1002	1" CONDUIT	LIFT STATION	280
TUB-1	2	BLDG 251 COMM CAB	1 1/4" CONDUIT	SOUTH WALL	45
TUB-3	2	BLDG 251 COMM CAB	1 1/4" CONDUIT	SOUTH WALL	40
TUB-4	2	BLDG 251 COMM CAB	1 1/4" CONDUIT	EAST WALL	50
TUB-5	2	BLDG 251 COMM CAB	1 1/4" CONDUIT	WEST WALL	10
TUB-6	2	BLDG 251 COMM CAB	1 1/4" CONDUIT	WEST WALL	20

CABLE TYPE TABLE

TYPE	DESCRIPTION	SPECIFICATION
1	I/O CABLE FPL, 1TSP 16 AWG & TWIST/FT. RS485	28 3100, 2.14.B
2	ETHERNET CAT6e (PROVIDED BY LANL)	27 1000, 2.10
3	PAGING SPEAKER, 10 AWG, TSP	27 3000, 2.4.A.5
4	PAGING SPEAKER, 12 AWG, TSP	27 3000, 2.4.A.3
5	PAGING SPEAKER, 14 AWG, TSP	27 3000, 2.4.A.2
6	PAGING SPEAKER, 16 AWG, TSP	27 3000, 2.4.A.1
7	LIFT STATION AUTODIALER, POTS (WET LOCATIONS)	27 1000, 2.16
8	PAGING SPEAKER, 16 AWG, TSP (WET LOCATIONS)	27 3000, 2.4.A.4

KEYED NOTES

(1) CABLES TO BE FIELD ROUTED FOR INSTALLATION. FINAL LENGTH MAY VARY.

(2) SEE CABLE TYPE TABLE THIS SHEET INDICATING THE CABLE TYPES AND ASSOCIATED CONSTRUCTION SPECIFICATION.

(3) EACH CABLE RUN INDICATED WILL CONTAIN A TOTAL OF (3) THREE CABLES BEING RUN TO ACCOMMODATE EACH 3-PORT TELECOMMUNICATIONS OUTLET.

(4) IT IS ACCEPTABLE TO INSTALL MULTIPLE PAGING SPEAKER CABLES IN A SINGLE CONDUIT PROVIDED 40% FILL IS NOT EXCEEDED.

(5) PORTIONS OF THIS CONDUIT ARE BURIED. SEE SHEET E-1001.

(6) CATAGORY 5E CABLE (GFE) INSTALLED PER SPECIFICATION SECTION 28 3100.

NO	DATE	CLASS REV	ADC	DESCRIPTION	DWN	DES	CHKD	SUB	APP

AECOM

RLWTF-UP LOW LEVEL WASTE SUBPROJECT

CABLE SCHEDULES

DRAWN	V DAVISON
DESIGN	S MOORE
CHECKED	G MOE
DATE	5/8/14

BLDG. 230 TA-50

SUBMITTED MANNY TARIN

APPROVED FOR RELEASE ED ARTIGLIA

Los Alamos NATIONAL LABORATORY PO Box 1663 Los Alamos, New Mexico 87545

SHEET E-7121

423 OF 434

CLASSIFICATION REVIEWER DATE

PROJECT ID 100761

DRAWING NO C55864

REV 0

EUGENE DAVID MOE NEW MEXICO 21369 PROFESSIONAL ENGINEER

File Location: P:\RLWTF LOW-LEVEL WASTE FACILITY\500 CAD\C55864 MAIN BUILDING\SHEETS\18 ELECTRICAL\55864-E-7121-REV.DWG
Plotted By: MOORE, STEPHEN Plot Date: Monday, May 05, 2014

printed:

TELECOMMUNICATIONS SYMBOL LEGEND

(ALL SYMBOLS SHOWN ARE NOT NECESSARILY USED ON THE DRAWINGS)

SYMBOL	DESCRIPTION
	NEW WORK
	HIDDEN OR BURIED
	MULTI-OUTLET ASSEMBLY
	CABLE TRAY
	DUPLEX RECEPTACLE OUTLET
	SPECIAL PURPOSE OUTLET – USE SUBSCRIPT TO IDENTIFY TYPE IN SPECS
	CONDUIT DOWN
	CONDUIT UP
	CONDUIT UP AND DOWN
	CONDUIT SEAL
	CONDUIT CAP
	TELECOMMUNICATIONS OUTLET (4-PORT VOICE/DATA)
	FLOOR MOUNTED TELECOMMUNICATIONS OUTLET (4-PORT)
S	WALL SPEAKER, 15W
S	CEILING SPEAKER, 4W
J	JUNCTION BOX
T	TELECOMMUNICATIONS RACEWAY
1	KEYED NOTE DESIGNATION
3	ELECTRICAL EQUIPMENT DESIGNATION
5	MECHANICAL EQUIPMENT DESIGNATION
7	NAMEPLATE DESIGNATION
	SURGE PROTECTION DEVICE

ABBREVIATIONS

AFF	ABOVE FINISHED FLOOR
BOT	BOTTOM OF TRAY
EXP	EXPLOSION PROOF
FCS	FACILITY CONTROL SYSTEM
GFE	GOVERNMENT FURNISHED EQUIPMENT
PA	PUBLIC ADDRESS SYSTEM
RGS	RIGID GALVANIZED STEEL
TC	TELECOMMUNICATION
WP	WEATHERPROOF

NO	DATE	CLASS REV	ADC	DESCRIPTION	DWN	DES	CHKD	SUB	APP

AECOM

RLWTF-UP LOW LEVEL WASTE SUBPROJECT

SYMBOL LEGEND AND ABBREVIATIONS

DRAWN: V DAVISON

DESIGN: S MOORE

CHECKED: G MOE

DATE: 5/8/14

BLDG. 230 TA-50

SUBMITTED: MANNY TARIN

APPROVED FOR RELEASE: ED ARTIGLIA

Los Alamos NATIONAL LABORATORY PO Box 1663 Los Alamos, New Mexico 87545

SHEET T-0001

424 OF 434

CLASSIFICATION | REVIEWER | DATE

PROJECT ID 100761 | DRAWING NO C55864 | REV 0

EUGENE DAVID MOE NEW MEXICO 21369 REGISTERED PROFESSIONAL ENGINEER 05/07/14

File Location: P:\RLWTF LOW-LEVEL WASTE FACILITY\500 CAD\C55864 MAIN BUILDING\SHEETS\17 TELECOMMUNICATIONS\C55864-T-0001-REV.DWG
Plotted By: MOORE, STEPHEN Plot Date: Monday, May 05, 2014

5/12/14

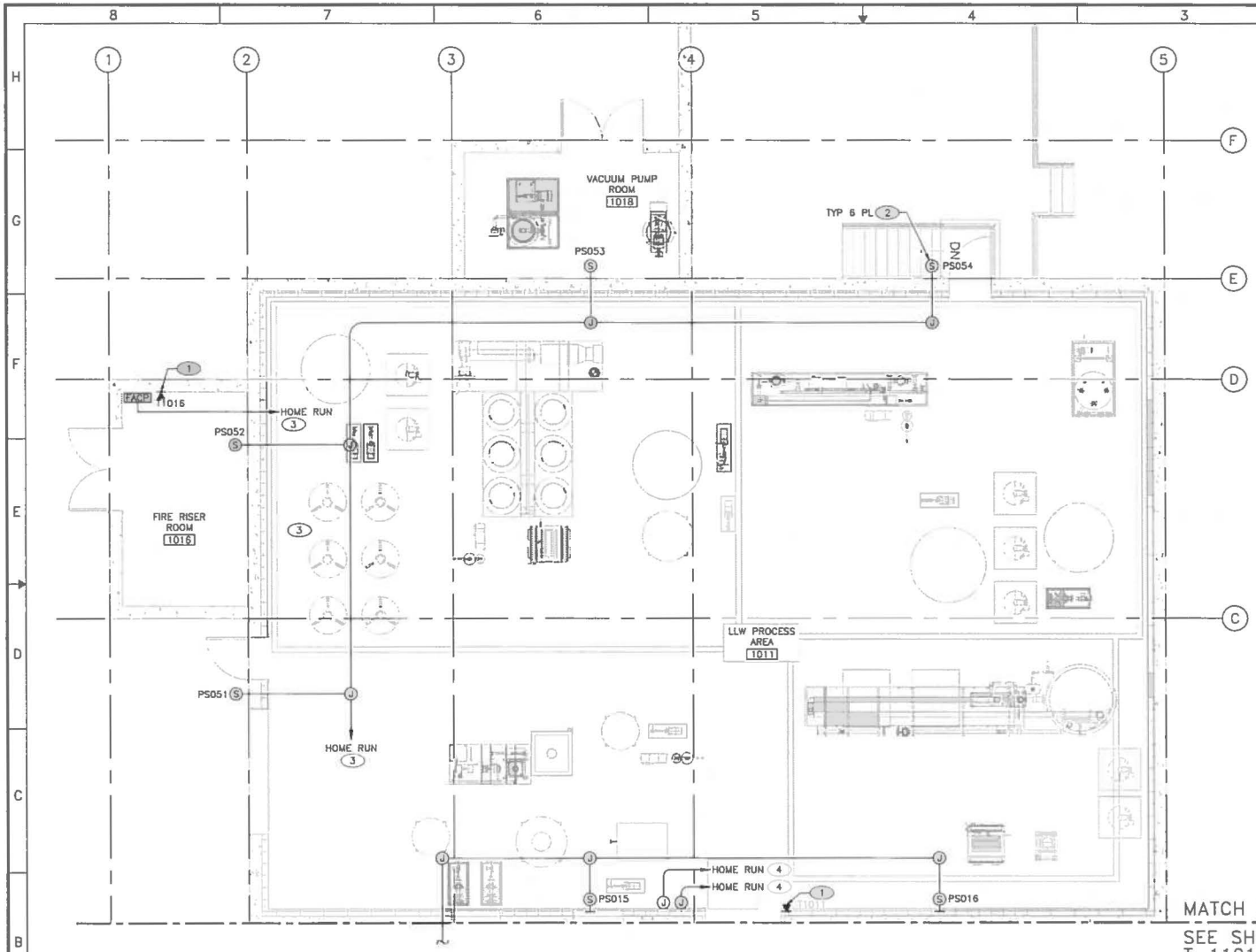

TELECOMMUNICATION AND PAGING PLAN – NORTH

1/4"=1'-0"

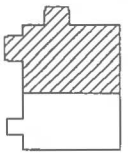

KEY PLAN
SCALE: NONE

GENERAL NOTES

1. IF THIS SHEET IS NOT 24" X 36", THEN IT IS A REDUCED SIZE PLOT. USE THE GRAPHIC SCALE ACCORDINGLY.
2. SEE SHEET E-7121 FOR CABLE SCHEDULE.
3. ALL CONDUIT IS 1" UNLESS OTHERWISE NOTED. IT IS ACCEPTABLE TO INSTALL MULTIPLE PAGING SPEAKER CABLES IN A SINGLE CONDUIT PROVIDED 40% FILL IS NOT EXCEEDED.
4. MAINTAIN FIRE RATING OF CONCRETE WALL PENETRATIONS. SEE SHEET E-5104 FOR FIRESTOPPING DETAILS.

KEYED NOTES

(1) INSTALL 4 11/16" SQUARE, 2 1/8" DEEP OUTLET BOX WITH SINGLE DEVICE RAISED COVER. FACE PLATES, MODULAR CONNECTORS AND CABLE ARE GFE. FIELD ROUTE 1" CONDUIT FROM EACH OUTLET TO CABLE TRAY LOCATED IN COMM ROOM. (TELECOMMUNICATIONS CONDUIT NOT SHOWN).

(2) INSTALL WALL-MOUNTED SPEAKER AT 10'-0" AFF. INSTALL TWISTED PAIR UNSHIELDED SPEAKER CABLE FOR PAGING SYSTEM. INTERCONNECT SPEAKERS AS A SINGLE PAGING ZONE. SEE SHEET T-6101.

(3) FIELD ROUTE 3/4" CONDUIT FROM FACP JUNCTION BOX TO CABLE TRAY LOCATED IN COMM ROOM. INSTALL TWO CATEGORY 5E RED CABLES. PER REQUIREMENTS OF SPECIFICATION SECTION 28 3100.

(4) FIELD ROUTE 1" CONDUIT FROM JUNCTION BOX MOUNTED 12'-0" AFF TO CABLE TRAY LOCATED IN COMM ROOM.

NO	DATE	CLASS REV	ADC	DESCRIPTION	DWN	DES	CHKD	SUB	APP

AECOM

RLWTF-UP LOW LEVEL WASTE SUBPROJECT

TELECOMMUNICATION AND PAGING PLAN – NORTH

DRAWN: V DAVISON
DESIGN: S MOORE
CHECKED: G MOE
DATE: 5/8/14

BLDG. 230 TA-50

SUBMITTED: MANNY TARIN
APPROVED FOR RELEASE: ED ARTIGLIA

Los Alamos NATIONAL LABORATORY
PO Box 1663 Los Alamos, New Mexico 87545

SHEET T-1100
425 OF 434

CLASSIFICATION | REVIEWER | DATE

PROJECT ID 100761 | DRAWING NO C55864 | REV 0

EUGENE DAVID MOE — NEW MEXICO — 21369 — REGISTERED PROFESSIONAL ENGINEER — 5/27/14

File Location: P:\RLWTF LOW-LEVEL WASTE FACILITY\300 CAD\C55864 MAIN BUILDING\SHEETS\17 TELECOMMUNICATIONS\C55864-T-1100-RD.DWG
Plotted By: MOORE, STEPHEN Plot Date: Monday, May 05, 2014

9 of 12

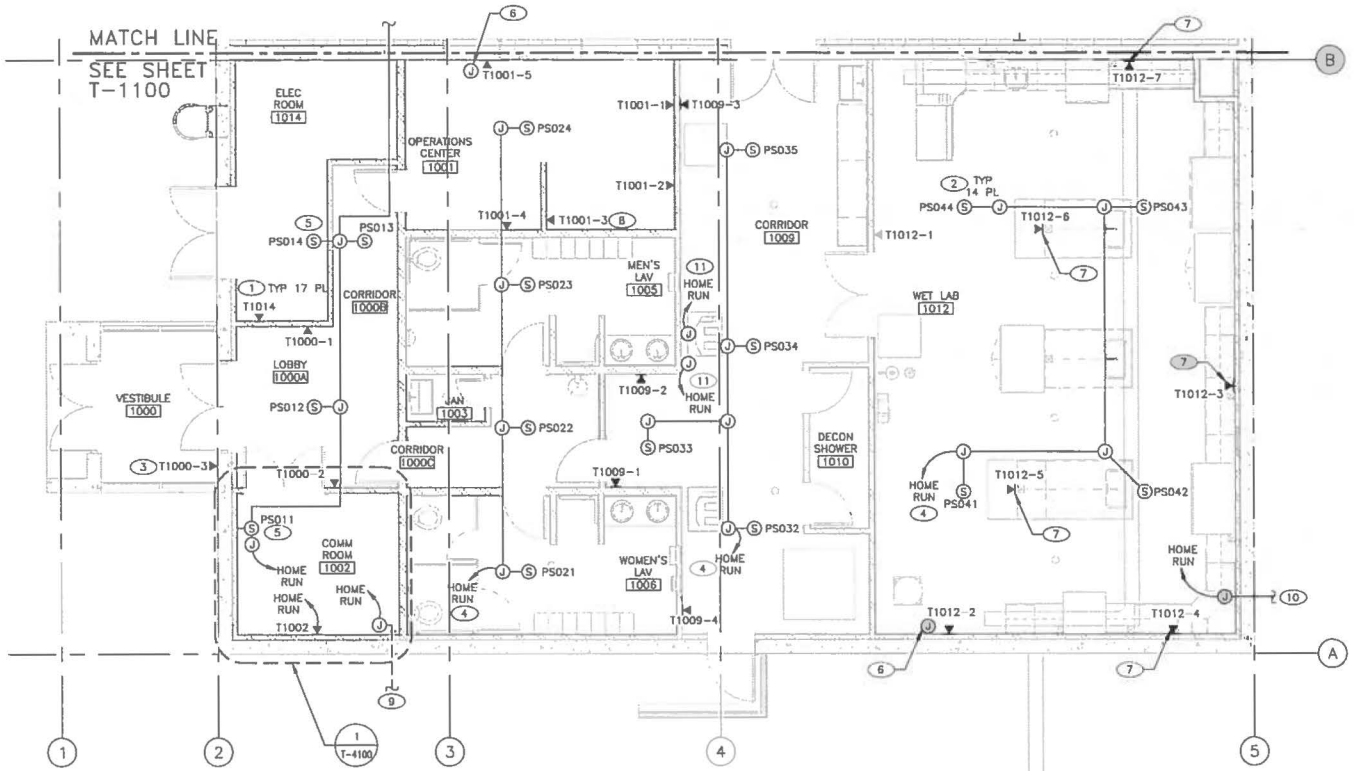

TELECOMMUNICATION AND PAGING PLAN – SOUTH

1/4"=1'-0"

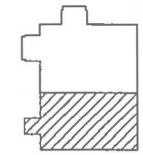

KEY PLAN
SCALE: NONE

GENERAL NOTES

1. IF THIS SHEET IS NOT 24" X 36", THEN IT IS A REDUCED SIZE PLOT. USE THE GRAPHIC SCALE ACCORDINGLY.
2. SEE SHEET E-7121 FOR CABLE SCHEDULE.
3. ALL CONDUIT IS 1" UNLESS OTHERWISE NOTED. IT IS ACCEPTABLE TO INSTALL MULTIPLE PAGING SPEAKER CABLES IN A SINGLE CONDUIT PROVIDED 40% FILL IS NOT EXCEEDED.
4. MAINTAIN FIRE RATING OF CONCRETE WALL PENETRATIONS. SEE SPECIFICATION SECTION 07 9200 FOR FIRESTOPPING REQUIREMENTS.

KEYED NOTES

1. INSTALL 4" SQUARE, 2 1/8" DEEP OUTLET BOX WITH SINGLE DEVICE RAISED COVER. FACE PLATES, MODULAR CONNECTORS AND CABLE ARE GFE. FIELD ROUTE 1" CONDUIT FROM EACH OUTLET TO CABLE TRAY. (TELECOMMUNICATIONS CONDUIT NOT SHOWN).
2. INSTALL CEILING MOUNTED SPEAKERS. INSTALL TWISTED PAIR UNSHIELDED SPEAKER CABLE FOR PAGING SYSTEM. INTERCONNECT SPEAKERS AS A SINGLE PAGING ZONE. SEE SHEET T-6001.
3. INSTALL TELECOMMUNICATION OUTLET IN A WEATHER-PROOF ENCLOSURE.
4. FIELD ROUTE 1" CONDUIT FROM JUNCTION BOX TO CABLE TRAY LOCATED IN COMM. ROOM.
5. INSTALL WALL MOUNTED SPEAKERS AT 10'-0" A.F.F. FIELD ROUTE 1" CONDUIT FROM EACH OUTLET TO CABLE TRAY.
6. INSTALL A 4 11/16" SQUARE, 2 1/8" DEEP OUTLET BOX ABOVE CEILING FOR FUTURE USE. INSTALL 1" CONDUIT FROM OUTLET BOX TO TELECOMMUNICATIONS ROOM CABLE TRAY.
7. 3 PORT TELECOMMUNICATION OUTLET PROVIDED WITH LAB CASEWORK.
8. CONNECTIVITY TO YELLOWNET REQUIRED.
9. UNDERGROUND CONDUIT TO EFFLUENT STORAGE BUILDING PAGING SPEAKERS. SEE DRAWING C55867 SHEET T-1400.
10. UNDERGROUND CONDUIT TO LIFT STATION AUTODIALER. SEE SHEET E-1001.
11. FIELD ROUTE 1" CONDUIT FROM JUNCTION BOX MOUNTED ABOVE CEILING TO CABLE TRAY LOCATED IN COMM ROOM.

NO	DATE	CLASS REV	ADC	DESCRIPTION	DWN	DES	CHKD	SUB	APP

AECOM

RLWTF-UP LOW LEVEL WASTE SUBPROJECT

TELECOMMUNICATION AND PAGING PLAN – SOUTH

BLDG. 230 TA-50

DRAWN	V DAVISON
DESIGN	S MOORE
CHECKED	G MOE
DATE	5/8/14

SUBMITTED: MANNY TARIN

APPROVED FOR RELEASE: ED ARTIGUA

Los Alamos NATIONAL LABORATORY PO Box 1663 Los Alamos, New Mexico 87545

SHEET T-1101

426 OF 434

CLASSIFICATION | REVIEWER | DATE

PROJECT ID 100761 | DRAWING NO C55864 | REV 0

EUGENE DAVID MOE NEW MEXICO 21369 PROFESSIONAL ENGINEER

File Location: P:\RLWTF LOW-LEVEL WASTE FACILITY\500 CAD\C55864 MAIN BUILDING\SHEETS\17 TELECOMMUNICATIONS\55864-T-1101-R0.DWG
Plotted By: MOORE, STEPHEN Plot Date: Monday, May 05, 2014

12477

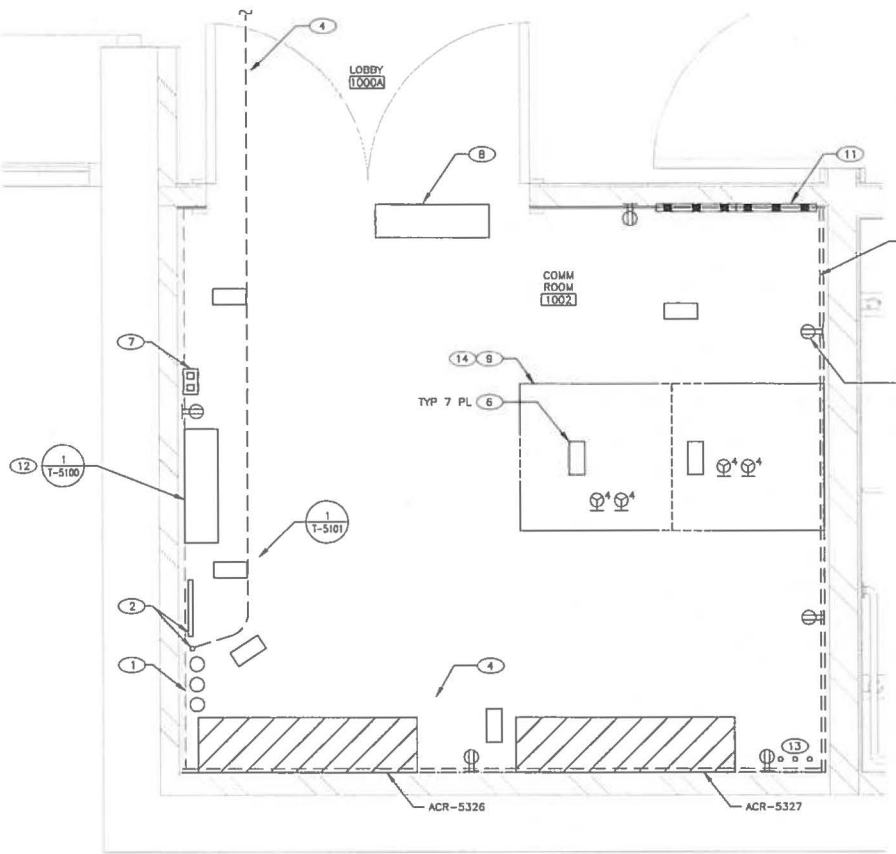

COMM ROOM ENLARGED PLAN

1" 0" 6" 3" 0 1'
1"=1'-0"

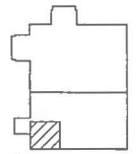

KEY PLAN
SCALE: NONE

GENERAL NOTES

1. IF THIS SHEET IS NOT 24"X36", THEN IT IS A REDUCED SIZE PLOT. USE THE GRAPHIC SCALE ACCORDINGLY.
2. SEE SHEET E-1108 SOUTH RECEPTACLE PLAN – PROCESS AREA FOR ADDITIONAL RECEPTACLE WIRING REQUIREMENTS.
3. INSTALL STATIC DISSIPATIVE TILE FLOORING IN TELECOMMUNICATION ROOM. SEE SPECIFICATION SECTION 09 6500.

KEYED NOTES

(1) INSTALL ENTRANCE CONDUITS ROUTED PER SHEET E-1000. TELECOMMUNICATIONS FIBER AND CABLE TO BE CONNECTED TO NETWORK AS DETERMINED BY LANL TELECOMMUNICATIONS GROUP. TERMINATE CONDUITS WITH INSULATING BUSHINGS APPROXIMATELY 4" ABOVE FLOOR IN LOCATION SHOWN. INSTALL 1200 LB. TEST PULL TAPE WITH STAMPED FOOTAGE IN EACH CONDUIT AND TIE OFF AT EACH END. PROVIDE TEMPORARY CAPS TO EXCLUDE CONSTRUCTION DEBRIS FROM CONDUITS.

(2) INSTALL 4" X 12" X 1/4" COPPER GROUND BAR WITH INSULATED STANDOFFS AND PRE-DRILLED WITH 1/4" HOLES IN LOCATION SHOWN. INSTALL DEDICATED THW INSULATED 4/0 AWG GROUND CONDUCTOR FROM GROUND BAR TO MAIN ELECTRODE GROUND BAR IN ELECTRICAL ROOM (SEE SHEET E-1105).

(3) LINE THREE WALLS OF ROOM WITH SHEETS OF 3/4" APA GRADE A-B GROUP 1 SANDED INTERIOR PLYWOOD FINISHED WITH TWO COATS OF WHITE OR LIGHT GRAY FIRE RETARDING PAINT ON ALL SIDES.

(4) PROVIDE 12" (MINIMUM) WIDE, 4" DEEP, LADDER TYPE CABLE TRAY WITH 6 INCH RUNG SPACING AROUND THREE INTERIOR WALLS OF ROOM AND ABOVE EQUIPMENT CABINETS. MOUNT TRAY 8 INCHES OUT FROM WALLS AND WITH BOTTOM 7'-9" AFF. USE BRACKETS THAT DO NOT EXTEND DOWN ON TERMINAL BOARD. BOND TRAY TO GROUND BAR WITH MINIMUM 6 AWG CONDUCTOR. EXTEND END OF CABLE TRAY INTO LOBBY CEILING SPACE A MINIMUM OF 2 FEET. CONNECT TO CONDUITS FROM OUTLETS. CONNECT CONDUITS TO CABLE TRAY USING NRTL LISTED CABLE TRAY/CONDUIT CLAMPS.

(5) PROVIDE A CONTINUOUS GALVANIZED STEEL FRAMING CHANNEL ABOVE THE TERMINAL BOARD. LOCATE AT 8'-9" AFF. BOND CHANNEL TO GROUND BAR USING 6 AWG MINIMUM CONDUCTOR. CLAMP CONDUITS TO CHANNEL.

(6) PROVIDE SIX CABLE DROP-OUT FITTINGS AT LOCATIONS DIRECTED BY THE LANL TELECOMMUNICATIONS GROUP.

(7) INSTALL WALL MOUNTED SECONDARY SURGE PROTECTION DEVICES ON PAGING SYSTEM AND TELECOMMUNICATION CONDUCTORS. BOND TO TELECOMMUNICATION ROOM GROUNDING BAR. SEE SHEETS T-6100 AND T-6101.

(8) INSTALL 6"X6"X24" WIREWAY 8 1/2" AFF FOR ACCESS CONTROL SYSTEM. INSTALL 3" CONDUIT FROM ACCESS CONTROL WIREWAY TO ABOVE EQUIPMENT RACK (NOT SHOWN). REF. SHEET X-1101.

(9) LANL TO PROVIDE AND INSTALL EQUIPMENT INCLUDING (2) TELECOMMUNICATION RACKS, ENTRANCE CABLE, TERMINATION PANELS AND SURGE PROTECTIVE DEVICES.

(10) 120V DUPLEX RECEPTACLES. SEE SHEET E-1108 FOR INSTALLATION.

(11) MULTI-OUTLET ASSEMBLY. SEE SHEET E-1108 KEYED NOTE 11 FOR INSTALLATION.

(12) INSTALL 6"X24"X24" PAGING SYSTEM TERMINAL BOX IN LOCATION SHOWN. MOUNT 48" AFF.

(13) THREE 1" CONDUITS THROUGH FLOOR SLAB FOR EFFLUENT SAMPLE BUILDING PAGING SPEAKERS, FACILITY CONTROL SYSTEM AND SPARE.

(14) INSTALL LANL PROVIDED DEDICATED PHONE CABLES FOR FIRE ALARM CONTROL PANEL. LANL SHALL TERMINATE CABLES PER SPECIFICATION SECTION 28 3100.

NO	DATE	CLASS REV	ADC	DESCRIPTION	DWN	DES	CHKD	SUB	APP

AECOM

RLWTF-UP LOW LEVEL WASTE SUBPROJECT

COMM ROOM ENLARGED PLAN

BLDG. 230 TA-50

DRAWN	V DAVISON
DESIGN	S MOORE
CHECKED	G MOE
DATE	5/8/14

SUBMITTED: MANNY TARIN — APPROVED FOR RELEASE: ED ARTIGLIA

Los Alamos NATIONAL LABORATORY — PO Box 1663, Los Alamos, New Mexico 87545

SHEET T-4100

427 OF 434

CLASSIFICATION | REVIEWER | DATE

PROJECT ID 100761 | DRAWING NO C55864 | REV 0

EUGENE DAVID MOE — NEW MEXICO — 21369 — PROFESSIONAL ENGINEER

File Location: P:\RLWTF LOW-LEVEL WASTE FACILITY\300 CAD\C55864 MAIN BUILDING\SHEETS\17 TELECOMMUNICATIONS\55864-T-4100-R0.DWG
Plotted By: MOORE, STEPHEN Plot Date: Monday, May 05, 2014

87h21 :

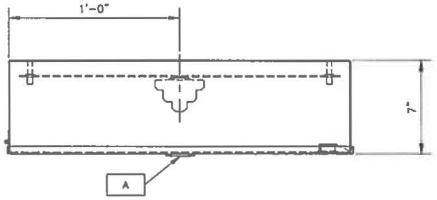

TOP VIEW

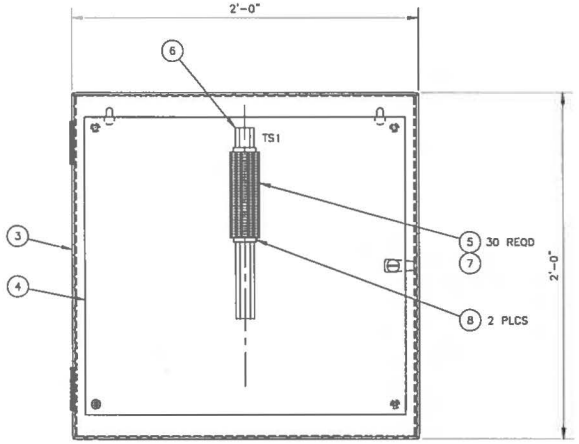

FRONT VIEW

1 TELECOMMUNICATIONS JUNCTION BOX TJB-201

1 / T-4100 TERMINAL BOX DETAIL (DOOR NOT SHOWN)

0 1" 2" 4" 6" 8"
3"=1'-0"

PARTS LIST/MATERIAL LIST

QTY REQD	PARTS / DASH NUMBER	NOMENCLATURE/DESCRIPTION	MATERIAL/REFERENCE	SHEET	ITEM NO.
X	-010	TJB-201 TELECOMMUNICATIONS JUNCTION BOX			1
					2
1	A24N24ALP OR APPROVED EQUAL	ENCLOSURE, 24"x24"x 6" NEMA TYPE 1, SINGLE DOOR	HOFFMAN		3
1	24N24MP OR APPROVED EQUAL	BACK PANEL, 21" X 22.5"	HOFFMAN		4
30	1492-JT3M OR APPROVED EQUAL	TERMINAL, 300V, 3 LEVEL/3 CIRCUIT, WITH GROUND POINT	ALLEN-BRADLEY		5
AR	199-DR1 OR APPROVED EQUAL	RAIL, MOUNTING, STEEL	ALLEN-BRADLEY		6
1	1492-EBJ3TM OR APPROVED EQUAL	END BARRIER	ALLEN-BRADLEY		7
2	1492-EAHJ35 OR APPROVED EQUAL	END ANCHOR	ALLEN-BRADLEY		8

NAMEPLATE ENGRAVING SCHEDULE

ITEM	SIZE	CHAR SIZE	ENGRAVING
A	3" W x 1 H"	3/16"	TJB-201

GENERAL NOTES

1. IF THIS SHEET IS NOT 24"X36", THEN IT IS A REDUCED SIZE PLOT. USE THE GRAPHIC SCALE ACCORDINGLY.
2. EQUIPMENT SHALL BE INSTALLED PER MANUFACTURER'S INSTRUCTIONS USING THE APPROPRIATE HARDWARE.
3. NAMEPLATE SHALL BE 1/16" THK MATTE FINISH LAMINATED PLASTIC WHITE SURFACE/BLACK CORE. BOND IN PLACE WHERE POSSIBLE.
4. ALL WIRES AND CABLE SHALL BE LABELED AT BOTH TERMINATIONS.
5. SEE SHEET T-6101 FOR WIRING TERMINATIONS.

NO	DATE	CLASS REV	ADC	DESCRIPTION	DWN	DES	CHKD	SUB	APP

AECOM

RLWTF-UP LOW LEVEL WASTE SUBPROJECT

PAGING SYSTEM TERMINAL BOX DETAIL

BLDG. 230 TA-50

DRAWN	V DAVISON
DESIGN	S MOORE
CHECKED	G MOE
DATE	5/8/14

SUBMITTED MANNY TARIN

APPROVED FOR RELEASE ED ARTIGLIA

Los Alamos NATIONAL LABORATORY PO Box 1663 Los Alamos, New Mexico 87545

SHEET T-5100

428 OF 434

CLASSIFICATION | REVIEWER | DATE

PROJECT ID 100761 | DRAWING NO C55864 | REV 0

EUGENE DAVID MOE NEW MEXICO 21368 PROFESSIONAL ENGINEER

File Location: P:\RLWTF LOW-LEVEL WASTE FACILITY\500 CAD\C55864 MAIN BUILDING\SHEETS\17 TELECOMMUNICATIONS\55864-T-5100-R0.DWG
Plotted By: MOORE, STEPHEN Plot Date: Monday, May 05, 2014

12479

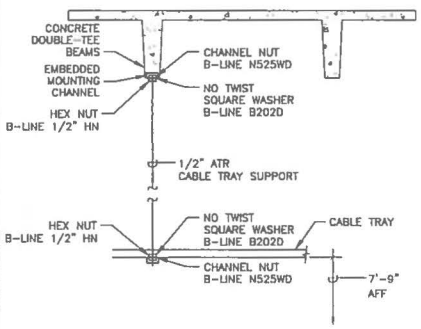

1 T-4100 CABLE TRAY DETAIL 4
SCALE: NONE

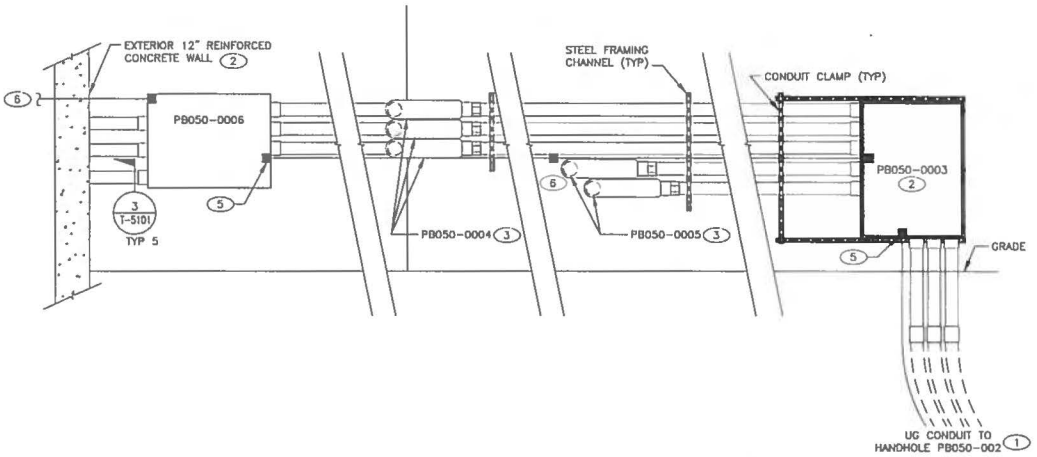

2 E-1000 TELECOMMUNICATIONS ENTRANCE CONDUIT DETAIL
SCALE: NONE

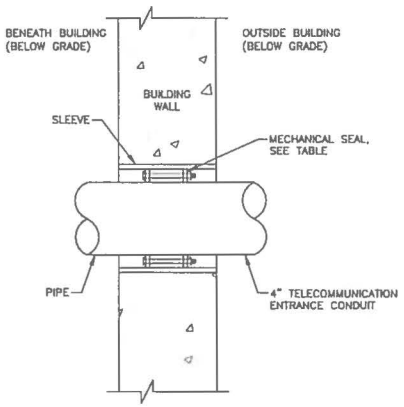

SECTION VIEW

3 T-5101 TELECOMMUNICATION ENTRANCE CONDUIT FOOTER PENETRATION DETAIL
SCALE: NONE

MECHANICAL SEAL TABLE			
NOMINAL PIPE SIZE	NOMINAL SLEEVE SIZE	METRASEAL MODEL NO.	REMARKS
4"	6"	10MS-300ES	PIPE SCHEDULE 40 STEEL PIPE, SLEEVE SCHEDULE 40 STEEL PIPE

KEYED NOTES

1. TRANSITION FROM BELOW GRADE DIRECT BURIED PVC CONDUIT TO RIGID METAL CONDUIT.
2. MOUNT PULL BOX TO STEEL REINFORCED CONCRETE WALL USING POST INSTALLED ANCHORS PER THE SPECIFICATIONS.
3. INSTALL "SMART PATHWAY, LLC., SMART CONDUIT BODIES" PULLING ELBOWS (KBLB400).
4. PROVIDE SEISMIC BRACING PER IBC.
5. ROUTE TELECOMMUNICATIONS GROUNDING CONDUCTOR WITH ENTRANCE CONDUIT. BOND GROUNDING CONDUCTOR TO METALLIC PULL BOXES.
6. BOND TELECOMMUNICATIONS GROUNDING CONDUCTOR TO BUILDING GROUNDING ELECTRODE SYSTEM.

NO	DATE	CLASS REV	ADC	DESCRIPTION	DWN	DES	CHKD	SUB	APP

AECOM

RLWTF-UP LOW LEVEL WASTE SUBPROJECT

DETAILS

BLDG. 230 TA-50

DRAWN	V DAVISON
DESIGN	S MOORE
CHECKED	G MOE
DATE	5/8/14

SUBMITTED: MANNY TARIN
APPROVED FOR RELEASE: ED ARTIGLIA

Los Alamos NATIONAL LABORATORY PO Box 1663 Los Alamos, New Mexico 87545

SHEET T-5101
429 OF 434

CLASSIFICATION | REVIEWER | DATE

PROJECT ID 100761 | DRAWING NO C55864 | REV 0

EUGENE DAVID MOE NEW MEXICO 21368 PROFESSIONAL ENGINEER

File Location: P:\RLWTF LOW-LEVEL WASTE FACILITY\300 CAD\C55864 MAIN BUILDING\SHEETS\17 TELECOMMUNICATIONS\55864-T-5101-R0.DWG
Plotted By: MOORE, STEPHEN Plot Date: Monday, May 05, 2014

12480

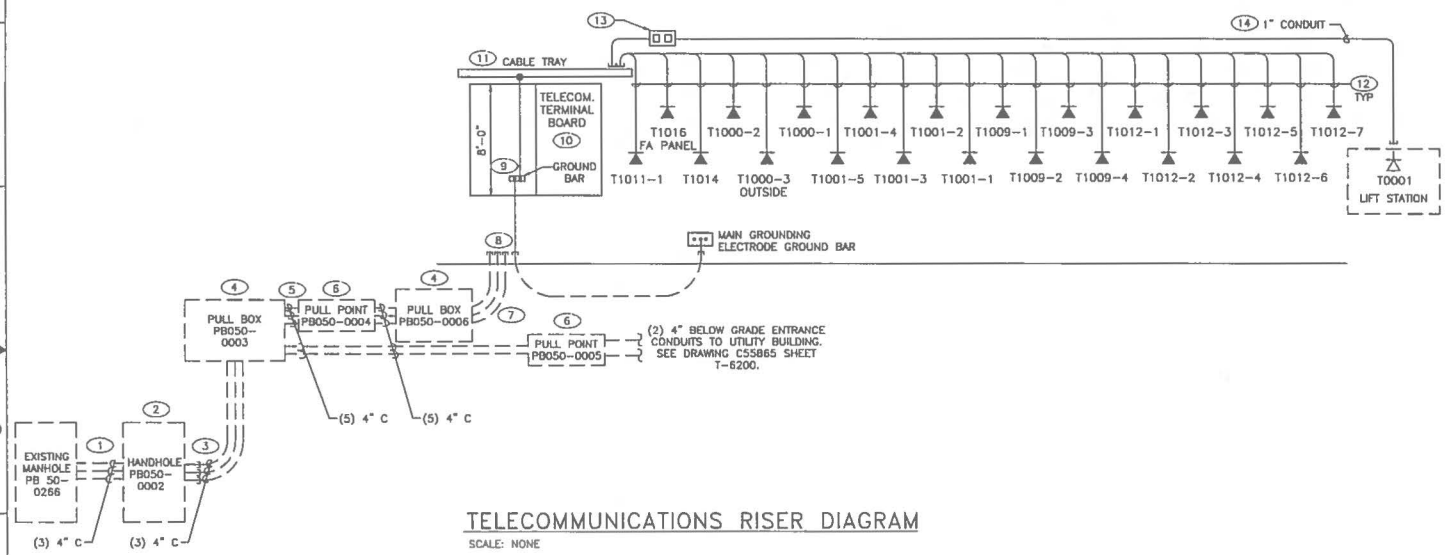

TELECOMMUNICATIONS RISER DIAGRAM

SCALE: NONE

GENERAL NOTES

1. SEE SHEET E-1000 FOR LOCATIONS OF TELECOMMUNICATIONS HAND HOLES AND PULLING POINTS.

KEYED NOTES

(1) INSTALL ENTRANCE CONDUITS IN CONCRETE ENCASED DUCTBANK WITH 4/0 AWG BARE COPPER GROUND CONDUCTOR CENTERED WITHIN DUCTBANK, ROUTED PER SHEET E-1000. ALIGN TELECOM ENTRANCE CONDUITS WITH EXISTING MANHOLE. AVOID ENTERING SIDE OF MANHOLE. EXTEND CONCRETE ENCASED GROUNDING CONDUCTOR THROUGH HANDHOLE AND BOND TO PULLBOX, PIPE RACK AND BUILDING GROUND ELECTRODE SYSTEM.

(2) INSTALL HANDHOLE 30" X 48" X 36".

(3) INSTALL DIRECT BURIED ENTRANCE CONDUITS. TRANSITION TO ABOVE GRADE RIGID METAL CONDUIT.

(4) INSTALL PULLBOX 48" X 36" X 8" MOUNTED TO RETAINING WALL.

(5) INSTALL RIGID METAL ENTRANCE CONDUITS MOUNTED TO RETAINING WALL.

(6) INSTALL PULLING ELBOWS, 1 PER CONDUIT, MOUNTED TO RETAINING WALL.

(7) INSTALL DIRECT BURIED ENTRANCE CONDUITS. TRANSITION TO BELOW GRADE PVC BEYOND PENETRATION THROUGH RETAINING WALL.

(8) TELECOMMUNICATIONS FIBER AND CABLE TO BE CONNECTED TO NETWORK BY THE LANL TELECOMMUNICATIONS GROUP. TERMINATE CONDUITS WITH INSULATING BUSHINGS APPROXIMATELY 4" ABOVE FLOOR. INSTALL 1200 LB. TEST PULL TAPE WITH STAMPED FOOTAGE IN EACH CONDUIT AND TIE OFF AT EACH END. PROVIDE TEMPORARY CAPS TO EXCLUDE CONSTRUCTION DEBRIS FROM CONDUITS.

(9) INSTALL 4" X 12" X 1/4" COPPER GROUND BAR WITH INSULATED STANDOFFS AND PRE-DRILLED WITH 1/4" HOLES IN SOUTHWEST CORNER OF THE ROOM. INSTALL DEDICATED THW INSULATED 4/0 AWG GROUND CONDUCTOR FROM GROUND BAR TO MAIN ELECTRODE GROUND BAR IN ELECTRICAL ROOM.

(10) LINE THREE WALLS OF THE ROOM WITH SHEETS OF 3/4" APA GRADE A-B GROUP 1 SANDED INTERIOR PLYWOOD FINISHED WITH TWO COATS OF WHITE OR LIGHT GRAY FIRE RETARDING PAINT, FROM FLOOR TO 8'-0" A.F.F.

(11) PROVIDE 12" (MINIMUM) WIDE, 4" DEEP, LADDER TYPE CABLE TRAY WITH 6 INCH RUNG SPACING AROUND THREE INTERIOR WALLS OF THE TELECOMMUNICATIONS ROOM AND ABOVE EQUIPMENT CABINETS. MOUNT TRAY 8 INCHES OUT FROM WALLS AND WITH BOTTOM 7'-9" AFF. USE BRACKETS THAT DO NOT EXTEND DOWN ON THE TERMINAL BOARD. BOND TRAY TO GROUND BAR WITH MINIMUM 6 AWG. EXTEND CABLE TRAY INTO BUILDING CORRIDOR CEILING SPACE. CONNECT TO CORRIDOR CABLE TRAY OR TO CONDUITS FROM OUTLETS. CONNECT CONDUITS TO CABLE TRAY USING NRTL LISTED CABLE TRAY/CONDUIT CLAMPS.

(12) INSTALL 1 1/4" MINIMUM DEDICATED CONDUIT TO EACH TELECOMMUNICATION OUTLET. REFER TO CONSTRUCTION SPECIFICATION SECTION 27 1000 OR FLOOR PLAN FOR SIZES.

(13) INSTALL SURGE PROTECTION DEVICE FOR COMMUNICATION CABLE EXITING THE BUILDING FOR A DISTANCE GREATER THAN 100 FEET (EDCO RJA-RJD SERIES).

(14) DEDICATED PAIR TELEPHONE CABLE TO LIFT STATION AUTODIALER FOR COMMUNICATIONS WITH TA-46 WASTE WATER PLANT.

NO	DATE	CLASS REV	ADC	DESCRIPTION	DWN	DES	CHKD	SUB	APP

AECOM

RLWTF-UP LOW LEVEL WASTE SUBPROJECT

RISER DIAGRAM

BLDG. 230 TA-50

DRAWN	V DAVISON
DESIGN	S MOORE
CHECKED	G MOE
DATE	5/8/14

SUBMITTED MANNY TARIN

APPROVED FOR RELEASE ED ARTIOLIA

Los Alamos NATIONAL LABORATORY PO Box 1663 Los Alamos, New Mexico 87545

SHEET T-6100

430 OF 434

CLASSIFICATION | REVIEWER | DATE

PROJECT ID 100761 | DRAWING NO C55864 | REV 0

EUGENE DAVID MOE NEW MEXICO 21369 PROFESSIONAL ENGINEER 5/8/14

18127

File Location: P:\RLWTF LOW-LEVEL WASTE FACILITY\500 CAD\C55864 MAIN BUILDING\SHEETS\17 TELECOMMUNICATIONS\55864-T-6100-RD.DWG
Plotted By: MOORE, STEPHEN Plot Date: Monday, May 12, 2014

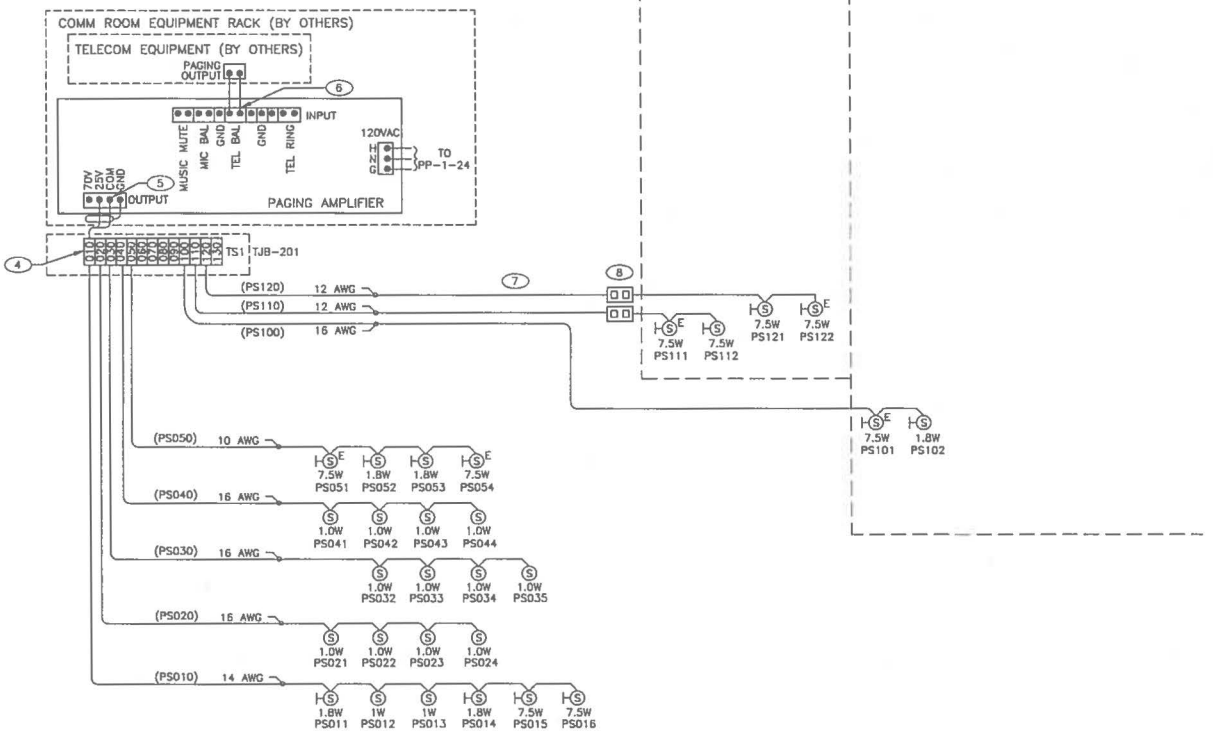

PAGING SYSTEM WIRING DIAGRAM

SCALE: NONE

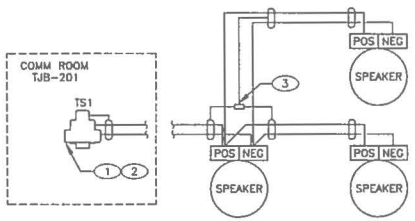

SPEAKER WIRING DIAGRAM (TYPICAL)

SCALE: NONE

GENERAL NOTES

1. FOR PAGING PLANS SEE SHEETS T-1100, T-1101 AND DRAWING C55865 SHEET T-1200.
2. FOR CABLE TYPES SEE CONSTRUCTION SPECIFICATION SECTION 27 3000.
3. ADJUST SPEAKER TAP SETTING TO THE VALUE SHOWN.

KEYED NOTES

(1) TERMINALS SHOWN ARE THREE DECK TERMINALS. ALL ROWS ARE TO BE JUMPERED TOGETHER USING VENDOR SUPPLIED "PUSH-IN" WIRE JUMPERS.

(2) SPEAKER CABLE SHIELD TO BE CONNECTED TO GROUND AT TERMINAL STRIP TS1 ONLY. ALL OTHER CABLE SHIELDS SHALL BE CONNECTED TOGETHER USING INSULATED SPLICES (SEE DIAGRAM THIS SHEET).

(3) "T TAP" SPEAKERS AS NECESSARY. INSTALL INSULATED SPLICE OR WIRENUT TO ENSURE SHIELD CONTINUITY AT JUNCTION POINTS.

(4) PAGING SYSTEM SPEAKER TERMINAL BOX MOUNTED ON TELECOMMUNICATION ROOM WALL. SEE SHEET T-5100.

(5) AMPLIFIER SHALL OPERATE WITH A BALANCED OUTPUT. DO NOT INSTALL BRIDGING CLIP BETWEEN GND AND COM.

(6) ALL TIE-INS TO MAIN TELECOMMUNICATION SYSTEM WILL BE PERFORMED BY LANL MAINTENANCE AND SITE SERVICES.

(7) ROUTE PS120, PS110 CIRCUITS WITH PS050, TO JUNCTION BOX ADJACENT TO SPEAKER PS054 AND EXTEND 1" CONDUIT UP INTO MECHANICAL PIPE RACK TO LLW UTILITY BUILDING.

(8) INSTALL SURGE PROTECTION DEVICE FOR SPEAKER CABLES EXITING THE BUILDING FOR DISTANCES GREATER THAN 100 FEET (EDCO FAS-1-080HC SERIES).

NO	DATE	CLASS REV	ADC	DESCRIPTION	DWN	DES	CHKD	SUB	APP

AECOM

RLWTF-UP LOW LEVEL WASTE SUBPROJECT

PAGING SYSTEM WIRING DIAGRAM

DRAWN V DAWSON
DESIGN S MOORE
CHECKED G MOE
DATE 5/8/14

BLDG. 230 TA-50

SUBMITTED MANNY TARIN
APPROVED FOR RELEASE ED ARTIGLIA

Los Alamos NATIONAL LABORATORY
PO Box 1663 Los Alamos, New Mexico 87545

SHEET T-6101
431 OF 434

CLASSIFICATION REVIEWER DATE

PROJECT ID 100761
DRAWING NO C55864
REV 0

EUGENE DAVID MOE NEW MEXICO 21369 PROFESSIONAL ENGINEER

File Location: P:\RLWTF LOW-LEVEL WASTE FACILITY\300 CAD\C55864 MAIN BUILDING\SHEETS\17 TELECOMMUNICATIONS\55864-T-6101-R0.DWG
Plotted By: MOE, STEPHEN Plot Date: Monday, May 05, 2014

281271

ACCESS CONTROL SYMBOL LEGEND

(ALL SYMBOLS SHOWN ARE NOT NECESSARILY USED ON THE DRAWINGS)

SYMBOL	DESCRIPTION
CR	BADGE READER
ES	ELECTRIC DOOR STRIKE INCLUDES DOOR CONTACTS
WW	WIREWAY (6"X6"X36")
JB	BADGE READER JUNCTION BOX (12"X12"X4")
J	JUNCTION BOX
←——	CONDUIT DOWN
o——	CONDUIT UP

NO	DATE	CLASS REV	ADC	DESCRIPTION	DWN	DES	CHKD	SUB	APP

AECOM

RLWTF-UP LOW LEVEL WASTE SUBPROJECT

ACCESS CONTROL SYMBOL LEGEND

BLDG. 230 TA-50

DRAWN	V DAVISON
DESIGN	S MOORE
CHECKED	G MOE
DATE	5/8/14

SUBMITTED MANNY TARIN

APPROVED FOR RELEASE ED ARTIGLIA

Los Alamos NATIONAL LABORATORY PO Box 1663 Los Alamos, New Mexico 87545

SHEET X-0001

432 OF 434

CLASSIFICATION | REVIEWER | DATE

PROJECT ID 100761 | DRAWING NO C55864 | REV 0

EUGENE DAVID MOE NEW MEXICO 21360 PROFESSIONAL ENGINEER

File Location: P:\RLWTF LOW-LEVEL WASTE FACILITY\500 CAD\C55864 MAIN BUILDING\SHEETS\19 SECURITY\55864-X-0001-R0.DWG
Plotted By: MOORE, STEPHEN Plot Date: Monday, May 05, 2014

: 12483

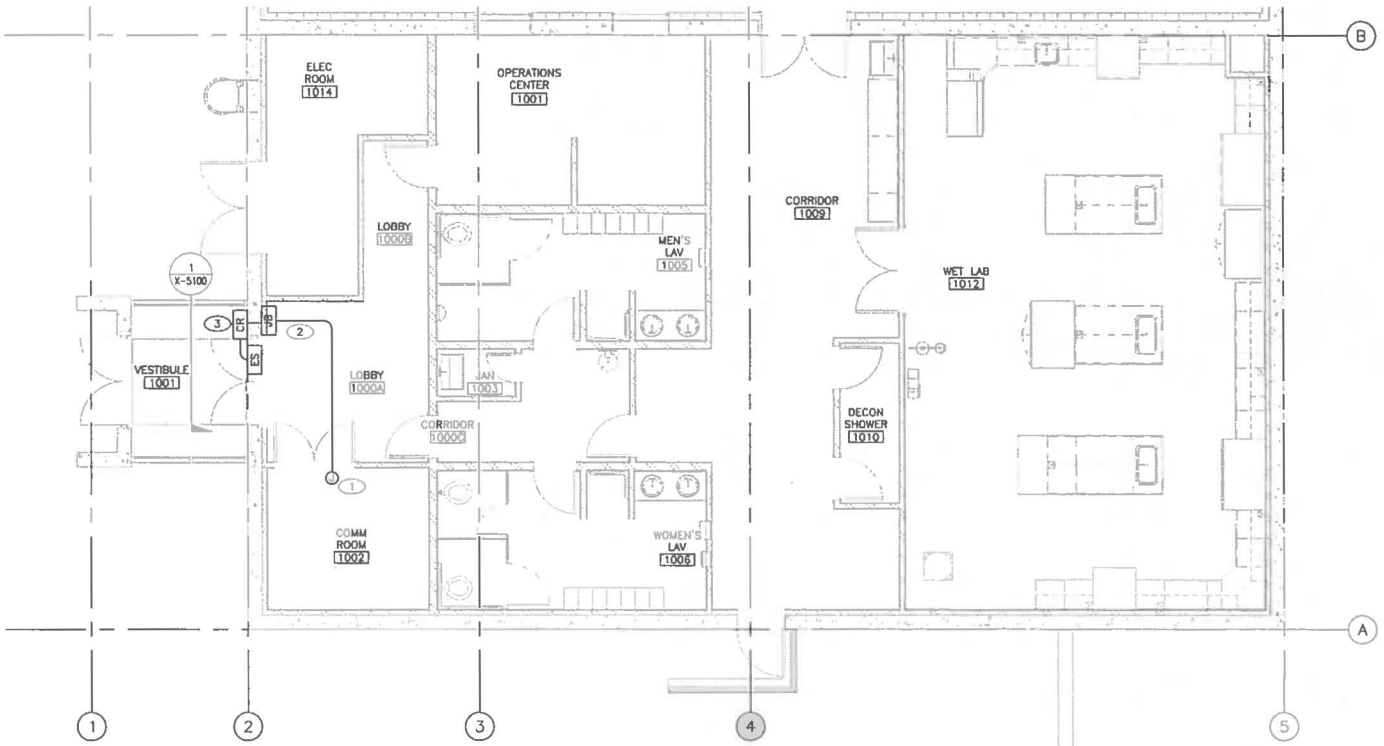

ACCESS CONTROL SYSTEM PLAN – SOUTH

0' 1' 2' 4' 8' 16'
1/4"=1'-0"

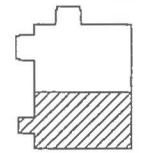

KEY PLAN
SCALE: NONE

GENERAL NOTES

1. IF THIS SHEET IS NOT 24" X 36", THEN IT IS A REDUCED SIZE PLOT. USE THE GRAPHIC SCALE ACCORDINGLY.

KEYED NOTES

(1) SEE SHEET T–4100 FOR TELECOMMUNICATION ROOM LAYOUT AND WIREWAY INSTALLATION.

(2) FLUSH MOUNT BADGE READER JUNCTION BOX ON INTERIOR WALL.

(3) PROVIDE A MINIMUM 12"X12" SURFACE SUITABLE FOR MOUNTING LANL BADGE READER.

NO	DATE	CLASS REV	ADC	DESCRIPTION	DWN	DES	CHKD	SUB	APP

AECOM

RLWTF–UP LOW LEVEL WASTE SUBPROJECT

ACCESS CONTROL SYSTEM PLAN – SOUTH

BLDG. 230 TA–50

DRAWN	V DAVISON
DESIGN	S MOORE
CHECKED	D MOE
DATE	5/8/14

SUBMITTED: MANNY TARIN

APPROVED FOR RELEASE: ED ARTIGLIA

Los Alamos NATIONAL LABORATORY PO Box 1663 Los Alamos, New Mexico 87545

CLASSIFICATION | REVIEWER | DATE

PROJECT ID: 100761 | DRAWING NO: C55864 | REV: 0

SHEET: X–1101

433 OF 434

EUGENE DAVID MOE 21369 NEW MEXICO PROFESSIONAL ENGINEER 6/27/14

File Location: P:\RLWTF LOW-LEVEL WASTE FACILITY\500 CAD\C55864 MAIN BUILDING\SHEETS\18 SECURITY\55864-X-1101-R0.DWG
Plotted By: MOORE, STEPHEN Plot Date: Monday, May 05, 2014

12184

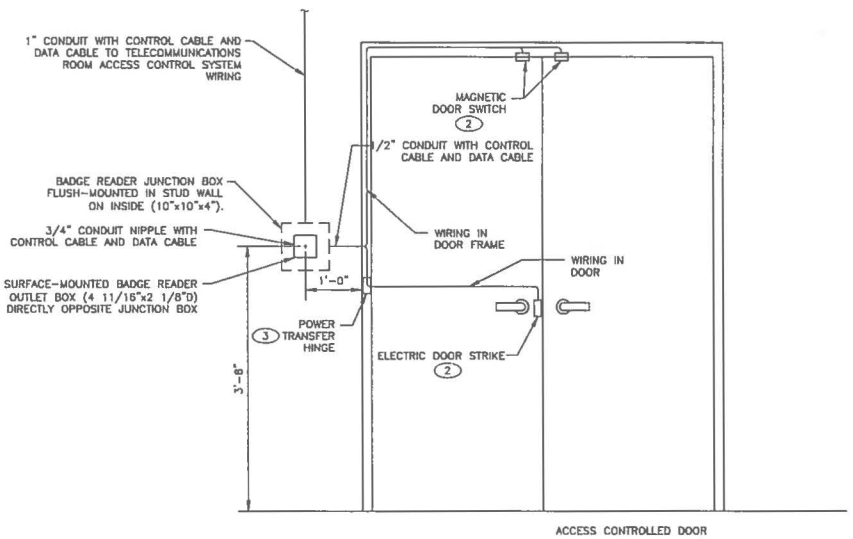

ELEVATION VIEW

1 X-1101 DOUBLE DOOR CONTROL SYSTEM 1

1" = 1'-0"

GENERAL NOTES

1. IF THIS SHEET IS NOT 24" X 36", THEN IT IS A REDUCED SIZE PLOT. USE THE GRAPHIC SCALE ACCORDINGLY.

KEYED NOTES

1. DETAIL IS DIAGRAMMATIC AND SHOWS REQUIRED CONDUIT CONNECTIONS AND SIZES FOR DOOR STRIKES, SWITCHES, AND BADGE READER. SEE KEYED NOTES ON SHEET X-1101 FOR MOUNTING REQUIREMENTS OF BADGE READER JUNCTION BOX.
2. GOVERNMENT FURNISHED EQUIPMENT. DOOR STRIKE IS PROVIDED AND INSTALLED BY LANL LOCKSHOP. COORDINATE INSTALLATION WITH LANL STR SEE SPECIFICATION 08 7100.
3. DOOR IDLE LEAF SHALL BE PROVIDED WITH POWER TRANSFER ELECTRIC HINGE. SEE SPECIFICATION 08 7100.

NO	DATE	CLASS REV	ADC	DESCRIPTION	DWN	DES	CHKD	SUB	APP

AECOM

RLWTF-UP LOW LEVEL WASTE SUBPROJECT

ACCESS CONTROL DETAILS

BLDG. 230 TA-50

DRAWN	V DAVISON
DESIGN	S MOORE
CHECKED	G MOE
DATE	5/6/14

SUBMITTED MANNY TARIN

APPROVED FOR RELEASE ED ARTIGLIA

Los Alamos NATIONAL LABORATORY PO Box 1663 Los Alamos, New Mexico 87545

SHEET X-5100

434 OF 434

CLASSIFICATION | REVIEWER | DATE

PROJECT ID 100761 | DRAWING NO C55864 | REV 0

EUGENE DAVID MOE NEW MEXICO 21369 PROFESSIONAL ENGINEER

File Location: P:\RLWTF LOW-LEVEL WASTE FACILITY\500 CAD\C55864 MAIN BUILDING\SHEETS\19 SECURITY\55864-X-5100-R0.DWG
Plotted By: MOORE, STEPHEN Plot Date: Monday, May 05, 2014

: 12485

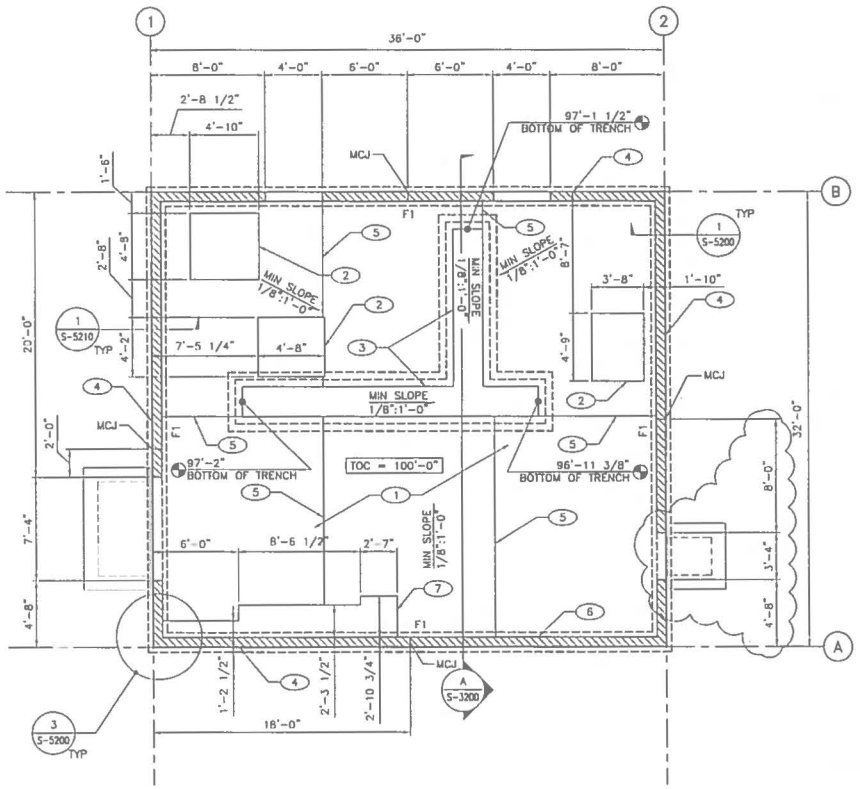

FOUNDATION PLAN

0' 1' 2' 4' 6' 8'
1/4"=1'-0"

GENERAL NOTES

1. IF THIS SHEET IS NOT 24"x36", THEN IT IS A REDUCED SIZE PLOT. USE GRAPHIC SCALE ACCORDINGLY.
2. ABBREVIATIONS & LEGEND ARE LOCATED ON SHEET C55864 S-0001. GENERAL STRUCTURAL NOTES ARE LOCATED ON SHEET C55864 S-0002.
3. FOR SCHEDULES, SEE SHEET S-7200.
4. ELEVATION 100'-0" CORRESPONDS TO MEAN SEA LEVEL ELEVATION OF 7265.50 FEET.
5. INSTALL CONCRETE ENCASED MAIN GROUNDING ELECTRODE. REFER TO SHEET E-6201.
6. SEE EQUIPMENT DRAWINGS FOR DETAILS AND LOCATIONS OF EMBEDDED PLATES.
7. SEE EQUIPMENT DRAWINGS FOR EQUIPMENT LAYOUT AND SIZES.
8. F# DESIGNATES FOOTING SIZE, SEE FOUNDATION SCHEDULE ON SHEET S-7200.

KEYED NOTES

1. 6" THICK CONCRETE SLAB ON GRADE WITH #4 @ 18" O.C. EACH WAY, MID DEPTH OF SLAB.
2. HOUSE KEEPING PAD, SEE DETAIL 4/S-5200 AND SCHEDULE ON SHEET S-7200. SEE SHEET Q-1202 FOR EQUIPMENT EMBED REQUIREMENTS. HOUSE KEEPING PAD AND EQUIPMENT REQUIREMENTS TO BE FINALIZED WITH MECHANICAL ENGINEER AND EQUIPMENT MANUFACTURER.
3. TRENCHES, SEE DETAIL 2/S-5210. REFER TO P-1205 FOR SUMP INFORMATION.
4. 8" FULLY GROUTED CMU WALL, REINF W/#5@16" O.C. VERT & 2 #4@4'-0" O.C. HORIZ IN 8" BOND BEAM + TRUSS TYPE JOINT REINF PER MASONRY SPECS.
5. CONCRETE CONTROL JOINT, SEE DETAIL 2/S-5200.
6. PENETRATION, SEE SCHEDULE S-7201.
7. HOUSEKEEPING PAD, SEE DETAIL 4/S-5200 FOR REINFORCING. SEE SHEET Q-5201 FOR EMBED REQUIREMENTS. HOUSE KEEPING PAD AND EQUIPMENT REQUIREMENTS TO BE FINALIZED WITH ELECTRICAL ENGINEER AND EQUIPMENT MANUFACTURER

NO	DATE	CLASS REV	ADC	DESCRIPTION	DWN	DES	CHKD	SUB	APP
1	7/7/14	M		"ADDITION OF DOOR"	JTP	DM	CZ	MT	

AECOM

RLWTF-UP LOW LEVEL WASTE SUBPROJECT

FOUNDATION PLAN

BLDG. 251 TA-50

DRAWN	G.FLORES
DESIGN	C.ROSENBERGER
CHECKED	D.AKELROD
DATE	05-06-14

SUBMITTED: MANNY TAREN

APPROVED FOR RELEASE: ED ARTIGLIA

Los Alamos NATIONAL LABORATORY PO Box 1663 Los Alamos, New Mexico 87545

SHEET S-1200 1 OF 118

CLASSIFICATION | REVIEWER | DATE

PROJECT ID 100761 | DRAWING NO C55865 | REV 1

JAMES M. WEEKS NEW MEXICO 11384 REGISTERED PROFESSIONAL ENGINEER

James M. Weeks 7/7/14

File Location: Y:\DOE PROJECTS\LANL\LANL RLWTF LLW\DRAFTING\MODEL\CADD II\CUB\55865-S-1200.DWG
Plotted By: FLORES, GABRIEL Plot Date: Thursday, July 03, 2014

12486

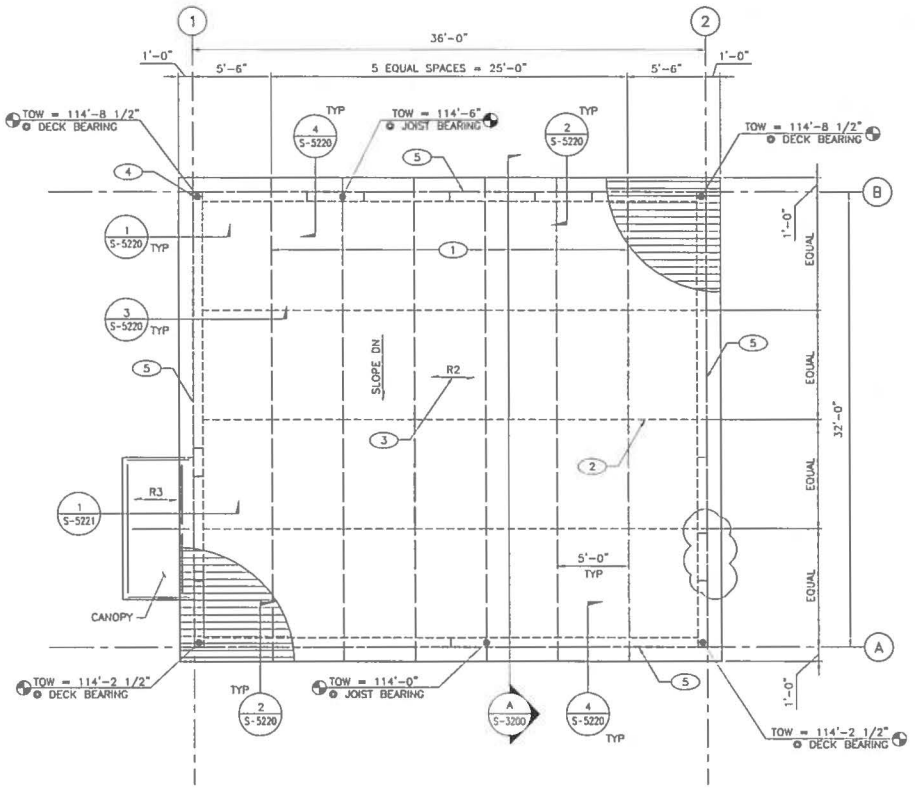

ROOF FRAMING PLAN

0' 1' 2' 4' 6' 8'
1/4"=1'-0"

GENERAL NOTES

1. IF THIS SHEET IS NOT 24"x36", THEN IT IS A REDUCED SIZE PLOT. USE GRAPHIC SCALE ACCORDINGLY.
2. ABBREVIATIONS & LEGEND ARE LOCATED ON SHEET C55864 S-0001. GENERAL STRUCTURAL NOTES ARE LOCATED ON SHEET C55864 S-0002.
3. —R2— INDICATES SPAN DIRECTION OF ROOF DECK.
4. —R3— INDICATES SPAN DIRECTION OF ROOF DECK. REFER TO ARCHITECTURAL DRAWINGS FOR EXTENT OF ROOF PANELS.
5. COORDINATE LOCATIONS OF FLUE OPENINGS THROUGH ROOF WITH MECHANICAL DRAWINGS.
6. REFER TO FIRE PROTECTION DRAWINGS AND ARCHITECTURAL DRAWINGS FOR FIRE PROTECTION AND ROOF FLASHING DETAILS.
7. DO NOT HANG LOADS FROM METAL DECK. PROVIDE ENGINEERED STRUCTURAL SYSTEM TO HANG ALL LOADS FROM STEEL JOISTS OR BEAMS. THIS INCLUDES BUT IS NOT LIMITED TO METAL STUD SOFFITS OR CEILING FRAMING, MECHANICAL, ELECTRICAL, OR PLUMBING EQUIPMENT.
8. FOR OPEN WEB JOIST DESIGN, CRITERIA, SEE JOIST NOTES ON SHEET S-0002.
   a. ALL OSHA REQUIREMENTS AND STANDARDS FOR OPEN WEB/BAR JOISTS SHALL BE FOLLOWED.
   b. THE MAXIMUM OPEN WEB JOIST LIVE LOAD DEFLECTION SHALL BE 1/360 OF THE SPAN LENGTH.
   c. THE OPEN WEB JOIST FABRICATOR SHALL SUBMIT SHOP DRAWINGS AND CALCULATIONS WET SEALED BY A CIVIL ENGINEER LICENSED IN THE STATE OF NEW MEXICO.
   d. JOIST MANUFACTURER SHALL CHECK JOIST BRIDGING AND MODIFY AS REQUIRED TO ADEQUATELY BRACE THE BOTTOM CHORDS. SEE DETAIL 3/S-5220. FIELD INSTALL WEB MEMBERS ON JOISTS FROM POINT OF LOAD TO NEAREST PANEL POINT ON OPPOSITE CHORD, WHEN CONCENTRATED LOADS ARE NOT APPLIED DIRECTLY AT PANEL POINTS. SEE DETAIL 1/S-5201.
   e. ALL JOISTS SHALL BE DESIGNED WITH AN ADDITIONAL 300LB ROVING LOAD AT TOP OR BOTTOM CHORD.

KEYED NOTES

(1) 18KCS4, REFER TO MANUFACTURER FOR SPECIFICATIONS.

(2) L1 1/4X1 1/4X7/64" HORIZ BRIDGING 3 ROWS, TOP & BOTT CHORD, TYP. SEE DETAIL 3/S-5220.

(3) ROOF DECK: 1 1/2" DEEP B-DECK, 18 GAGE, G-60 AS PROVIDED BY CSI METAL DECK GROUP OR APPROVED EQUAL. DECK SHALL BE CONTINUOUS OVER 3 OR MORE SPANS (4 SUPPORTS). SEE ARCHITECTURAL DRAWINGS FOR INSULATION, ROOFING, ETC. ATTACH DECK AS FOLLOWS USING HILTI X-ENP-19 FASTENERS (ICC ESR-2197):
   A. PERPENDICULAR BEARINGS AT SHEET LAP: 36/9 PATTERN (9 FASTENERS FOR EACH 3'-0" PANEL SECTION, SEE 4/S-5201.
   B. PERPENDICULAR BEARINGS AT NON-LAP: 36/9 PATTERN (9 FASTENERS FOR EACH 3'-0" PANEL SECTION, SEE 4/S-5201.
   C. SIDE SEAMS: HILTI #10X3/4" MIN HWH OR HHWH, SELF DRILLING STEEL SCREWS @ 6" O.C. CONFORMING TO C1513-10R REQUIREMENTS (ICC ESR-2196).
   D. FOR ROOF PENETRATIONS SEE 2/S-5201.

(4) CHANGE OF WALL HEIGHT BY 2 1/2" TYP. FOR JOIST BEARING @ 4 CORNERS.

(5) CMU WALL BELOW.

NO	DATE	CLASS REV	ADC	DESCRIPTION	DWN	DES	CHKD	SUBS	APP
1	7/7/14	U		"BOTTOM OF ROOF"	DH	DH	CE	MT	

AECOM

RLWTF-UP LOW LEVEL WASTE SUBPROJECT

ROOF FRAMING PLAN

DRAWN	G.FLORES
DESIGN	C.ROSENBURGH
CHECKED	D.AXELROD
DATE	05-08-14

BLDG. 251 TA-50

SUBMITTED	APPROVED FOR RELEASE
MANNY TARIN	ED ARTIGLIA

Los Alamos NATIONAL LABORATORY PO Box 1663 Los Alamos, New Mexico 87545

SHEET S-1201

2 OF 118

CLASSIFICATION	REVIEWER	DATE

PROJECT ID	DRAWING NO	REV
100761	C55865	1

JAMES M. IVESS NEW MEXICO 11384 REGISTERED PROFESSIONAL ENGINEER

7/7/14

File: Users\TARIN_MANNY_PROJECTS\WLWTF_RLWTF_LLW\DRAFTING\MODEL\CAD3 IT\CUP\S5865-S-1201.DWG
Plotted By: FLORES, GABRIEL Plot Date: Thursday, July 03, 2014

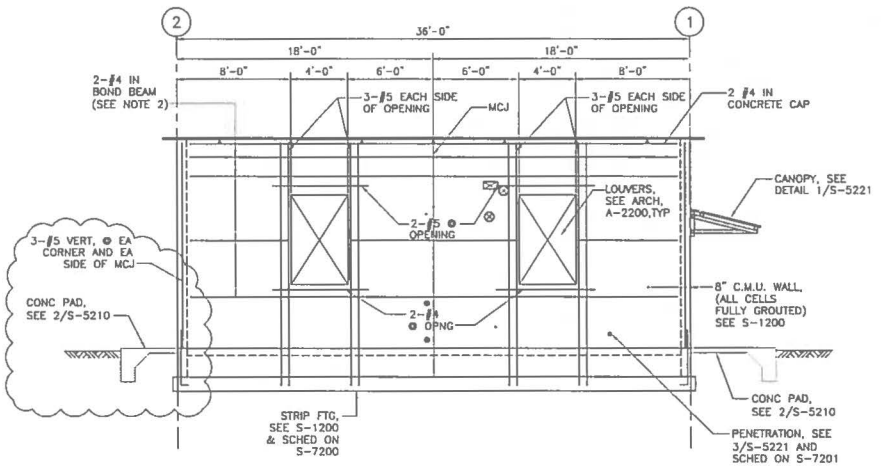

NORTH ELEVATION

0' 1' 2' 4' 8' 8'

1/4"=1'-0"

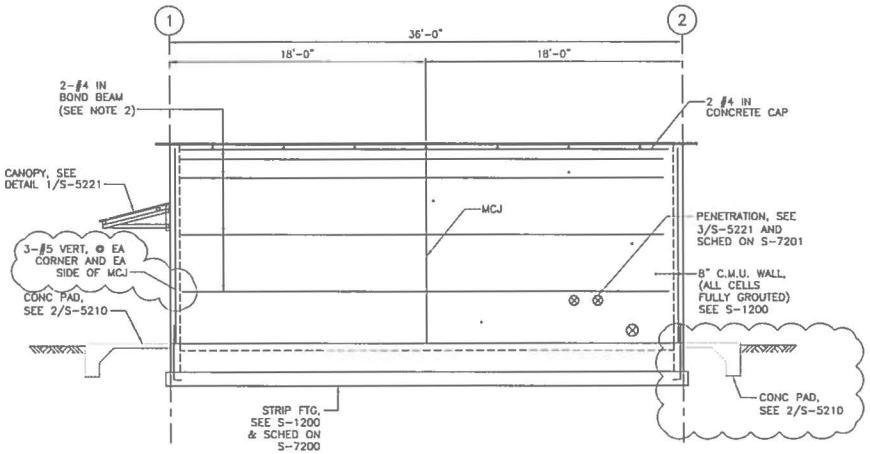

SOUTH ELEVATION

0' 1' 2' 4' 8' 8'

1/4"=1'-0"

GENERAL NOTES

1. IF THIS SHEET IS NOT 24"x36", THEN IT IS A REDUCED SIZE PLOT. USE GRAPHIC SCALE ACCORDINGLY.
2. ABBREVIATIONS & LEGEND ARE LOCATED ON SHEET C55864 S-0001. GENERAL STRUCTURAL NOTES ARE LOCATED ON SHEET C55864 S-0002.
3. BOND BEAMS ARE LOCATED AT EVERY 6TH COURSE, AT LOCATION OF CANOPY AND AT TOP OF WALL.
4. FOR MASONRY CONTROL JOINT (MCJ) LOCATIONS SEE SHEET S-1200.
5. FOR LAP SPLICES, SEE SCHEDULE ON SHEET S-7200.
6. FOR PENETRATIONS, SEE SCHEDULE ON SHEET S-7201.

NO	DATE	CLASS REV	ADC	DESCRIPTION	OWN	DES	CHKD	SUB	APP
1	7/7/14	U		"ADDITION OF DOOR"	JP	DNR	CK	MT	

AECOM

RLWTF-UP LOW LEVEL WASTE SUBPROJECT

STRUCTURAL ELEVATIONS

BLDG. 251 TA-50

DRAWN	G.FLORES
DESIGN	C.REED-MERRIDY
CHECKED	D.AXELROD
DATE	05-08-14

SUBMITTED: MANNY TARIN

APPROVED FOR RELEASE: ED ARTIOLIA

Los Alamos NATIONAL LABORATORY — PO Box 1663, Los Alamos, New Mexico 87545

SHEET S-2200

3 OF 118

CLASSIFICATION | REVIEWER | DATE

PROJECT ID: 100761

DRAWING NO: C55865

REV: 1

JAMES M. WEEKS NEW MEXICO 11384 REGISTERED PROFESSIONAL ENGINEER

7/7/14

98827 : 12

File: Location: FADBE PROJECT\PLANS\RLWTF LLW\DRAFTING\MODEL\CAD [IVCU]\559655-1-R28.DWG
Plotted By: FLORES, GABRIEL Plot Date: Thursday, July 03, 2014

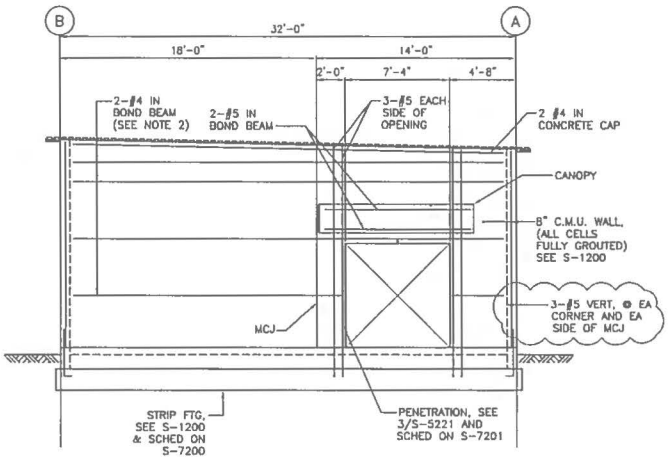

WEST ELEVATION

0' 1' 2' 4' 6' 8'
1/4"=1'-0"

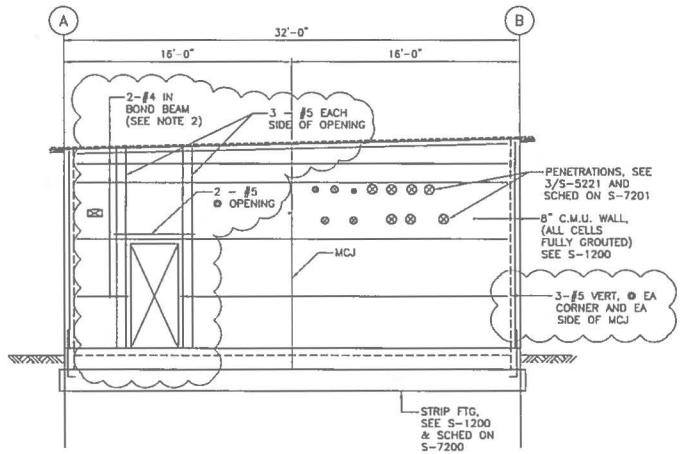

EAST ELEVATION

0' 1' 2' 4' 6' 8'
1/4"=1'-0"

GENERAL NOTES

1. IF THIS SHEET IS NOT 24"x36", THEN IT IS A REDUCED SIZE PLOT. USE GRAPHIC SCALE ACCORDINGLY.
2. ABBREVIATIONS & LEGEND ARE LOCATED ON SHEET C55864 S-0001. GENERAL STRUCTURAL NOTES ARE LOCATED ON SHEET C55864 S-0002.
3. BOND BEAMS ARE LOCATED AT EVERY 6TH COURSE, AT LOCATION OF CANOPY, AT JOIST SUPPORT AND AT TOP OF WALL.
4. FOR MASONRY CONTROL JOINT (MCJ) LOCATIONS SEE SHEET S-1200.
5. FOR LAP SPLICES, SEE SCHEDULE ON SHEET S-7200.
6. FOR PENETRATIONS, SEE SCHEDULE ON SHEET S-7201.

NO	DATE	CLASS REV	ADC	DESCRIPTION	DWN	DES	CHKD	SUB	APP
1	7/7/14	0		"ADDITION OF DOOR"					

AECOM

RLWTF-UP LOW LEVEL WASTE SUBPROJECT

STRUCTURAL ELEVATIONS

DRAWN	G.FLORES
DESIGN	C.MCDERMOTT
CHECKED	D.AKELROD
DATE	05-08-14

BLDG. 251 TA-50

SUBMITTED	APPROVED FOR RELEASE
MANNY TARIN	ED ARTIOLIA

Los Alamos NATIONAL LABORATORY — PO Box 1663, Los Alamos, New Mexico 87545

SHEET S-2201

4 OF 118

CLASSIFICATION	REVIEWER	DATE

PROJECT ID	DRAWING NO	REV
100761	C55865	1

JAMES M. WEEKS NEW MEXICO 11384 REGISTERED PROFESSIONAL ENGINEER

7/07/14

68127 : 12

File: Location: TA-50\DOE PROJECT\PLANS\PLANS_RLWTF LL\VSDRAFTING\MODEL\CAD3 11\CU3\C55865-S-2201.DWG
Plotted By: FLORES, GABRIEL Plot Date: Thursday, July 03, 2014

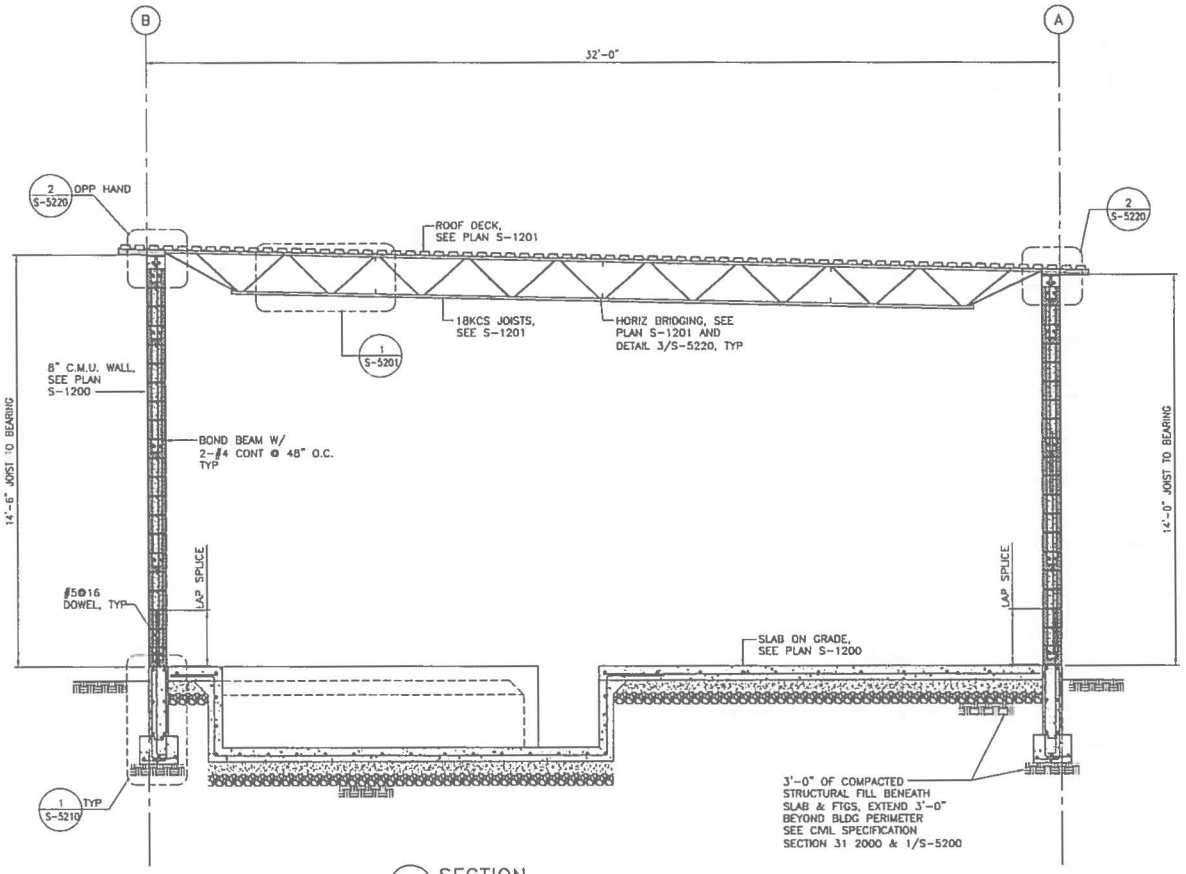

A S-1200 / S-1201 SECTION

1' 6" 0 1' 2' 3'

1/2"=1'-0"

GENERAL NOTES

1. IF THIS SHEET IS NOT 24"x36", THEN IT IS A REDUCED SIZE PLOT. USE GRAPHIC SCALE ACCORDINGLY.
2. ABBREVIATIONS & LEGEND ARE LOCATED ON SHEET C55864 S-0001. GENERAL STRUCTURAL NOTES ARE LOCATED ON SHEET C55864 S-0002.
3. FOR LAP SPLICES AND BASIC DEVELOPMENT LENGTHS OF REINFORCEMENT, SEE SCHEDULE ON S-7200.
4. ALL INFORMATION IS TYPICAL FOR EACH SIDE OF WALL SECTION, UNLESS NOTED OTHERWISE.

NO	DATE	CLASS REV	ADC	DESCRIPTION	DWN	DES	CHKD	SUB	APP

AECOM

RLWTF-UP LOW LEVEL WASTE SUBPROJECT

STRUCTURAL SECTIONS

BLDG. 251 TA-50

DRAWN	G.FLORES
DESIGN	C.ROSEBERRY
CHECKED	D.AXELROD
DATE	05-08-14

SUBMITTED MANNY TARIN

APPROVED FOR RELEASE ED ARTIGLIA

Los Alamos NATIONAL LABORATORY PO Box 1663 Los Alamos, New Mexico 87545

SHEET S-3200

5 OF 118

CLASSIFICATION REVIEWER DATE

PROJECT ID 100761 DRAWING NO C55865 REV 0

JAMES M. IVERSEN NEW MEXICO 11584 REGISTERED PROFESSIONAL ENGINEER

5/12/14

File: Lacerbm TA-50\E PROJECTS\LANL\LANL RLWTF LLW\DRAFTING\MODEL\EA3D INCUR\55865-S-3200.DWG
Plotted By: FLORES, CARMEL Plot Date: Monday, May 12, 2014

C55865 S-3200

GENERAL NOTES

1. IF THIS SHEET IS NOT 24"x36", THEN IT IS A REDUCED SIZE PLOT. USE GRAPHIC SCALE ACCORDINGLY.
2. ABBREVIATIONS & LEGEND ARE LOCATED ON SHEET C55864 S-0001. GENERAL STRUCTURAL NOTES ARE LOCATED ON SHEET C55864 S-0002.
3. FOR LAP SPLICES AND BASIC DEVELOPMENT LENGTHS OF REINFORCEMENT, SEE SCHEDULE ON S-7200.

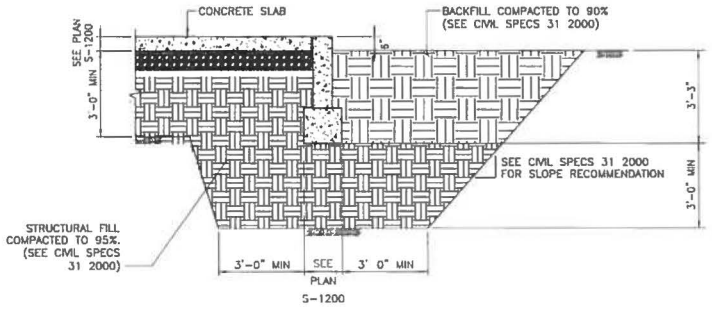

SECTION VIEW

1 S-1200 TYPICAL OVER EXCAVATION
, S-3200, S-5200, S-5210

1/2"=1'-0"

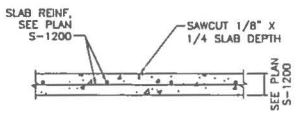

SECTION VIEW

2 S-1200 TYPICAL CONTROL JOINT

3/4"=1'-0"

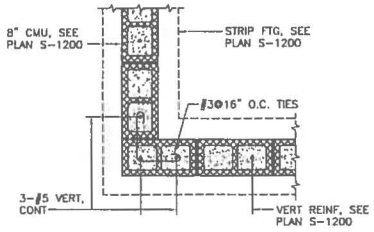

PLAN VIEW

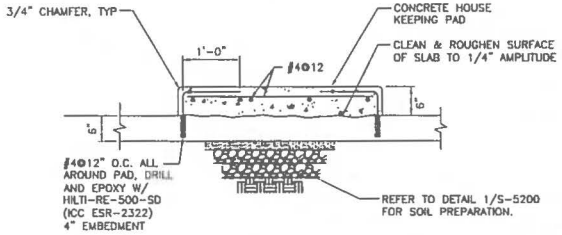

SECTION VIEW

3 S-1200 TYPICAL CMU CORNER

1"=1'-0"

4 S-1200 TYPICAL HOUSE KEEPING PAD

1"=1'-0"

JAMES M. WEEKS NEW MEXICO 11384 REGISTERED PROFESSIONAL ENGINEER

5/12/14

NO	DATE	CLASS REV	ADC	DESCRIPTION	DWN	DES	CHKD	SUB	APP

AECOM

RLWTF-UP LOW LEVEL WASTE SUBPROJECT

TYPICAL DETAILS

BLDG. 251 TA-50

DRAWN	G.FLORES
DESIGN	C.ROSENBERGER
CHECKED	DM D.AXELROD
DATE	05-06-14

SUBMITTED MANNY TARIN

APPROVED FOR RELEASE ED ARTIGLIA

Los Alamos NATIONAL LABORATORY PO Box 1663 Los Alamos, New Mexico 87545

SHEET S-5200

6 OF 118

CLASSIFICATION | REVIEWER | DATE

PROJECT ID 100761 | DRAWING NO C55865 | REV 0

File Location: Y:\IDE PROJECTS\LANL\LANL RLWTF LLW\DRAFTING\MODEL\CADD II\CUB\C55865-S-5200.DWG
Plotted By: FLORES, GABRIEL Plot Date: Monday, May 12, 2014

12491

GENERAL NOTES

1. IF THIS SHEET IS NOT 24"x36", THEN IT IS A REDUCED SIZE PLOT. USE GRAPHIC SCALE ACCORDINGLY.
2. ABBREVIATIONS & LEGEND ARE LOCATED ON SHEET C55864 S-0001. GENERAL STRUCTURAL NOTES ARE LOCATED ON SHEET C55864 S-0002.

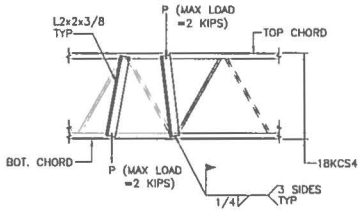

SECTION VIEW

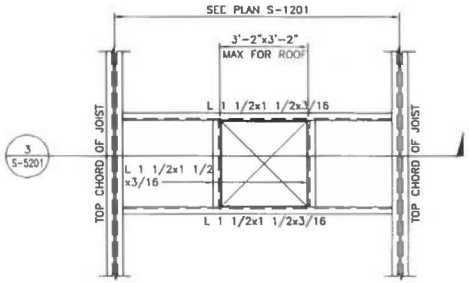

PLAN VIEW

1 S-3200 TYPICAL JOIST LOADING

1'-0" 8" 3" 0 1'
1"=1'-0"

2 S-1201 TYPICAL ROOF PENETRATION FRAMING

1'-0" 8" 3" 0 1'
1"=1'-0"

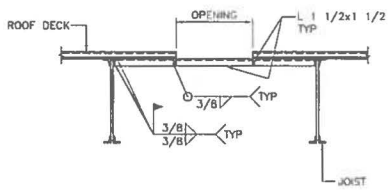

SECTION VIEW

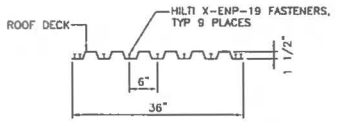

NOTE: SEE ICC ESR-2197

PATTERN 36/9

3 S-5201 TYPICAL ROOF PENETRATION FRAMING

1'-0" 8" 3" 0 1'
1"=1'-0"

4 S-1201, S-5220 ROOF DECK FASTENER CONFIGURATION

1'-0" 8" 3" 0 1'
1"=1'-0"

JAMES M. WEEKS NEW MEXICO 11384 REGISTERED PROFESSIONAL ENGINEER
5/12/14

NO	DATE	CLASS REV	ADC	DESCRIPTION	DWN	DES	CHKD	SUB	APP

AECOM

RLWTF-UP LOW LEVEL WASTE SUBPROJECT

TYPICAL DETAILS

DRAWN	G.FLORES
DESIGN	C.ROSEMBERGER
CHECKED	D.AXELROD
DATE	05-08-14

BLDG. 251 TA-50

SUBMITTED MANNY TARIN

APPROVED FOR RELEASE ED ARTIGLIA

Los Alamos NATIONAL LABORATORY PO Box 1663 Los Alamos, New Mexico 87545

SHEET S-5201

7 OF 118

CLASSIFICATION REVIEWER DATE

PROJECT ID 100761

DRAWING NO C55865

REV 0

25h21

File: Lacs\Users\Y\JDE PROJECTS\LANL RLWTF LLV\DRAFTING\MODELS\CAD3 11\DJP\55865-S-5201.DWG
Plotted By: FLORES, GABRIEL Plot Date: Monday, May 12, 2014

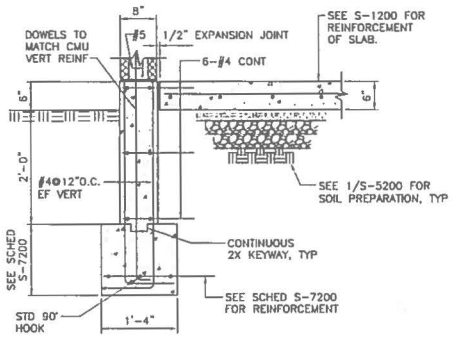

SECTION VIEW

1 S-1200 STEM WALL AT CMU , S-3200

1" = 1'-0"

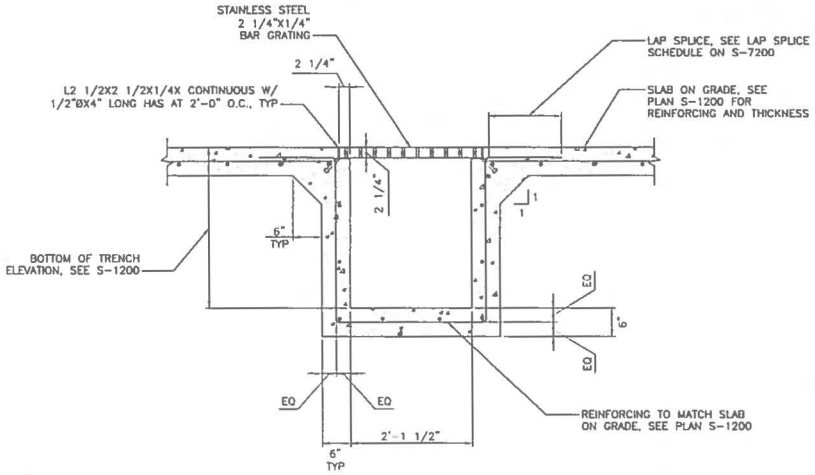

NOTE: FOR TRENCH SUMP, SEE PLUMBING PLAN P-1200.

SECTION VIEW

2 S-1200 TRENCH SUMP @ CONCRETE SLAB

1" = 1'-0"

GENERAL NOTES

1. IF THIS SHEET IS NOT 24"x36", THEN IT IS A REDUCED SIZE PLOT. USE GRAPHIC SCALE ACCORDINGLY.
2. ABBREVIATIONS & LEGEND ARE LOCATED ON SHEET C55864 S-0001. GENERAL STRUCTURAL NOTES ARE LOCATED ON SHEET C55864 S-0002.
3. FOR LAP SPLICES AND BASIC DEVELOPMENT LENGTHS OF REINFORCEMENT, SEE SCHEDULE ON S-7200.

NO	DATE	CLASS REV	ADC	DESCRIPTION	DWN	DES	CHKD	SUB	APP

AECOM

RLWTF-UP LOW LEVEL WASTE SUBPROJECT

FOUNDATION DETAILS

BLDG. 251 TA-50

DRAWN	G.FLORES
DESIGN	C.REDEMERGER
CHECKED	D.AXELROD
DATE	05-06-14

SUBMITTED MANNY TARIN

APPROVED FOR RELEASE ED ARTIGLIA

Los Alamos NATIONAL LABORATORY PO Box 1663 Los Alamos, New Mexico 87545

SHEET S-5210

8 OF 118

CLASSIFICATION | REVIEWER | DATE

PROJECT ID 100761 | DRAWING NO C55865 | REV 0

JAMES M. WEEKS NEW MEXICO 11384 REGISTERED PROFESSIONAL ENGINEER

James M. Weeks 5/12/14

File Location: Y:\DOE PROJECTS\LANL\LANL RLWTF LLV\DRAFTING\MODEL\CADD II\CUB\55865-S-5210.DWG
Plotted By: FLORES, GABRIEL Plot Date: Monday, May 12, 2014

12493

GENERAL NOTES

1. IF THIS SHEET IS NOT 24"x36", THEN IT IS A REDUCED SIZE PLOT. USE GRAPHIC SCALE ACCORDINGLY.
2. ABBREVIATIONS & LEGEND ARE LOCATED ON SHEET C55864 S-0001. GENERAL STRUCTURAL NOTES ARE LOCATED ON SHEET C55864 S-0002.
3. FOR LAP SPLICES AND BASIC DEVELOPMENT LENGTHS OF REINFORCEMENT, SEE SCHEDULE ON S-7200.

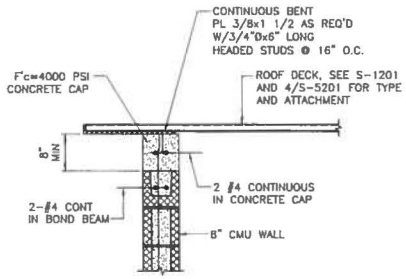

SECTION VIEW

1 S-1201 ROOF DECK AT CMU
S-5220

1' 0" 6" 3" 0 1'
1"=1'-0"

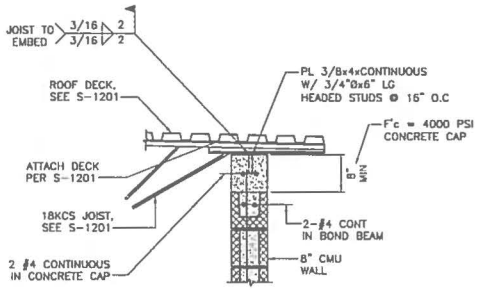

SECTION VIEW

2 S-1201 JOIST BEARING AT CMU
S-3200

1' 0" 6" 3" 0 1'
1"=1'-0"

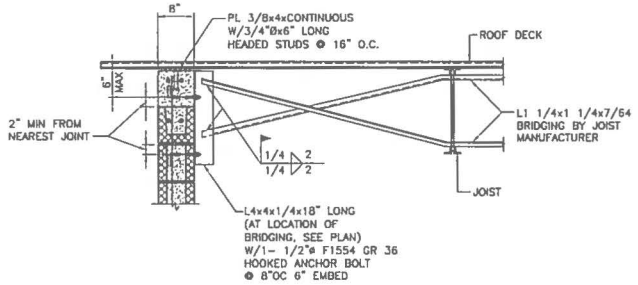

NOTE: FOR INFORMATION NOT SHOWN SEE DETAIL 1/S-5220.

SECTION VIEW

3 S-1201 JOIST BRIDGING AT CMU
S-3200

1' 0" 6" 3" 0 1'
1"=1'-0"

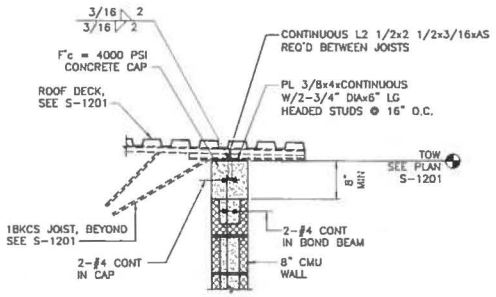

SECTION VIEW

4 S-1201 DECK BEARING BETWEEN JOISTS
S-3200

1' 0" 6" 3" 0 1'
1"=1'-0"

JAMES M. WEEKS
NEW MEXICO
11364
REGISTERED PROFESSIONAL ENGINEER
5/12/14

NO	DATE	CLASS REV	ADC	DESCRIPTION	DWN	DES	CHKD	SUB	APP

AECOM

RLWTF-UP LOW LEVEL WASTE SUBPROJECT

FRAMING DETAILS

BLDG. 251 TA-50

SUBMITTED MANNY TARIN

APPROVED FOR RELEASE ED ARTIOLA

DRAWN	G.FLORES
DESIGN	C.RISSENBEEK
CHECKED	D.AXELROD
DATE	05-08-14

Los Alamos NATIONAL LABORATORY
PO Box 1663 Los Alamos, New Mexico 87545

SHEET S-5220
9 OF 118

CLASSIFICATION | REVIEWER | DATE

PROJECT ID 100761 | DRAWING NO C55865 | REV 0

File Location: N:\ADE PROJECTS\LANL\LANL RLWTF LL\N\DRAFTING\MODEL\CAD\ENCLN\S5865-S-5220.DWG
Plotted By: FLORES, DANIEL PM: Date: Monday, May 12, 2014

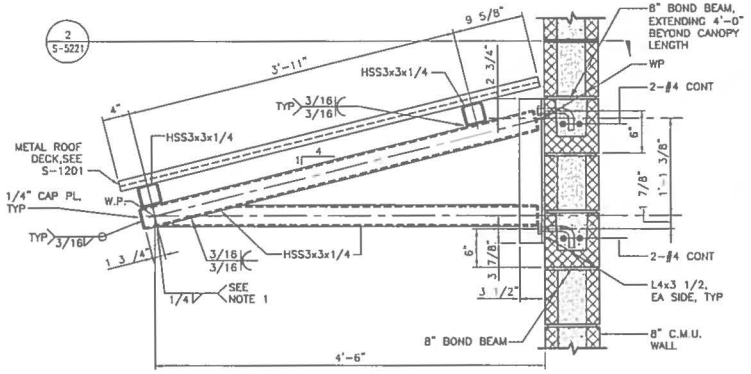

NOTE:
1. COPE TOE OF HORIZONTAL HSS MEMBER FOR FILLET WELD FIT UP.

SECTION VIEW

1 S-1201 CANOPY AT CMU , S-2200

1 1/2"=1'-0"

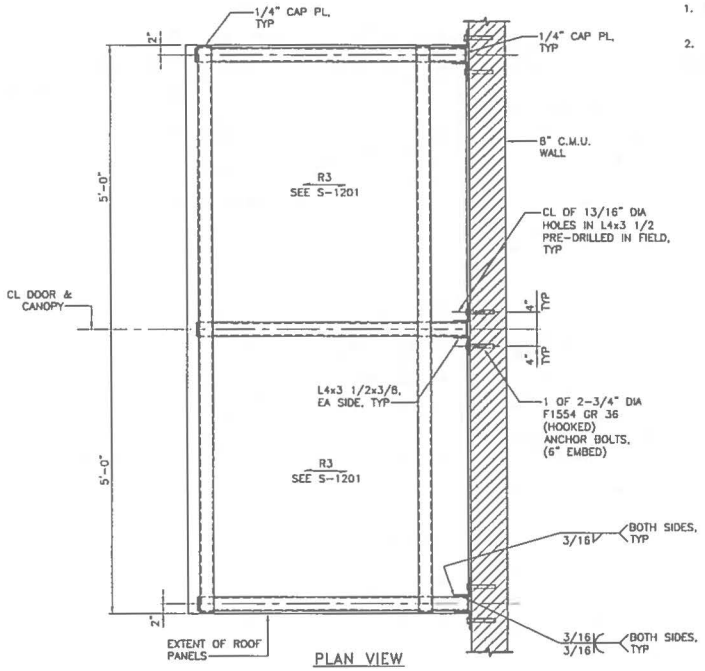

PLAN VIEW

2 S-5221 CANOPY AT CMU

1"=1'-0"

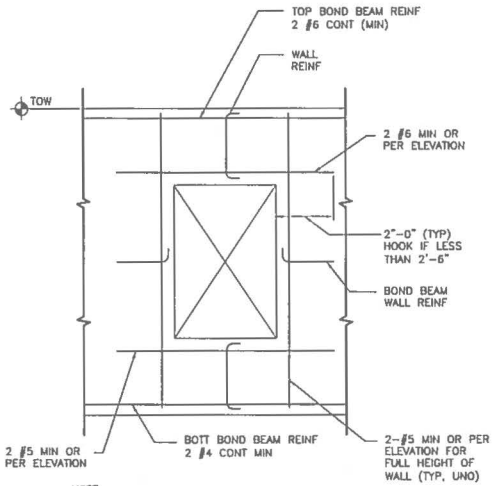

NOTE:
1. IF OPENING IS SMALL AND REINFORCING IS NOT INTERRUPTED NO ADDITIONAL REINFORCING IS REQUIRED.

ELEVATION VIEW

3 S-2200 CANOPY AT CMU , S-2201

1/2"=1'-0"

GENERAL NOTES

1. IF THIS SHEET IS NOT 24"x36", THEN IT IS A REDUCED SIZE PLOT. USE GRAPHIC SCALE ACCORDINGLY.
2. ABBREVIATIONS & LEGEND ARE LOCATED ON SHEET C55864 S-0001. GENERAL STRUCTURAL NOTES ARE LOCATED ON SHEET C55864 S-0002.

NO	DATE	CLASS REV	ADC	DESCRIPTION	DWN	DES	CHKD	SUB	APP

AECOM

RLWTF-UP LOW LEVEL WASTE SUBPROJECT

FRAMING DETAILS

BLDG. 251 TA-50

DRAWN	G.FLORES
DESIGN	C.ROSENBERGER
CHECKED	DM D.AXELROD
DATE	05-06-14

SUBMITTED MANNY TARIN

APPROVED FOR RELEASE ED ARTIGLIA

Los Alamos NATIONAL LABORATORY PO Box 1663 Los Alamos, New Mexico 87545

SHEET S-5221

10 OF 118

CLASSIFICATION | REVIEWER | DATE

PROJECT ID 100761 | DRAWING NO C55865 | REV 0

JAMES M. WEEKS NEW MEXICO 11384 REGISTERED PROFESSIONAL ENGINEER

James M. Weeks 5/12/14

File Location: Y:\DOE PROJECTS\LANL\LANL RLWTF LLW\DRAFTING\MODEL\CADD II\CUB\55865-S-5221.DWG
Plotted By: FLORES, GABRIEL Plot Date: Monday, May 12, 2014

: 12495

REINFORCING SPLICE AND EMBEDMENT SCHEDULE

BAR SIZE	EMBEDMENT & CLASS A SPLICE LENGTH	CLASS B SPLICE LENGTH	STD HOOK DEVELOPEMENT LENGTH
3	1'-7"	2'-1"	8"
4	2'-1"	2'-9"	10"
5	2'-7"	3'-5"	1'-0"
6	3'-1"	4'-1"	1'-3"
7	4'-6"	5'-11"	1'-5"
8	5'-2"	6'-9"	1'-7"
9	5'-10"	7'-7"	1'-10"
10	6'-7"	8'-6"	2'-1"

NOTES:
1. SPLICE LENGTHS ARE TYPICAL UNLESS OTHERWISE NOTED ON PLANS_AND DETAILS.
2. SPLICES SHALL BE STAGGERED AT LEAST 24".
3. FOR HORIZONTAL BARS WITH LESS THAN 12" OF FRESH CONCRETE CAST BELOW THE SPLICE OR EMBEDMENT. LENGTHS MAY BE REDUCED BY 30% OF THAT SHOWN.
4. TABLE IS BASED ON f'c = 4,000 PSI.
5. SPLICES ARE CLASS A, EXCEPT WHERE NOTED ON DRAWINGS.

FOUNDATION SCHEDULE

MARK	SIZE	DEPTH	TRANSVERSE REINFORCING	LONGITUDINAL REINFORCING	REMARKS
F1	1'-4" X CONT	1'-3"	#4 @ 12" O.C. BOTTOM	3 #4 BOTTOM	–

REINFORCING SPLICE AND EMBEDMENT SCHEDULE – MASONRY

CMU THICKNESS	BAR SIZE	F'm = 1900 PSI	
		CENTER	EDGE
8"	#3	18	18
	#4	24	24
	#5	30	35
	#6	49	66
	#7	72	90
	#8	117	135

NOTES:
1. ALL LENGTHS ARE IN INCHES.
2. WHERE 2 BARS PER CELL OCCUR THEY SHALL BE PLACED PER EDGE CONDITION.

NO	DATE	CLASS REV	ADC	DESCRIPTION	DWN	DES	CHKD	SUB	APP

AECOM

RLWTF–UP LOW LEVEL WASTE SUBPROJECT

STRUCTURAL SCHEDULES

DRAWN	G.FLORES
DESIGN	C.ROSENBERGER
CHECKED	D.AXELROD
DATE	05-08-14

BLDG. 251 TA-50

SUBMITTED: MANNY TAREN

APPROVED FOR RELEASE: ED ARTIOLIA

Los Alamos NATIONAL LABORATORY, PO Box 1663, Los Alamos, New Mexico 87545

SHEET S-7200

11 OF 118

CLASSIFICATION | REVIEWER | DATE

PROJECT ID 100761 | DRAWING NO C55865 | REV 0

JAMES M. IVEDA, NEW MEXICO, 11384, REGISTERED PROFESSIONAL ENGINEER

5/12/14

95121 :

File Location: N:\RDE PROJECTS\LANL RLWTF LLW\DRAFTING\MODELS\CAD FILES\C55865-S-7200.DWG
Plotted By: FLORES, GABRIEL Plot Date: Monday, May 12, 2014

PENETRATION SCHEDULE

• DISTANCES ARE TO CENTER OF PENETRATION UNLESS NOTES OTHERWISE.

GENERAL LOCATION	PENETRATION SIZE	HORIZONTAL DISTANCE	COLUMN LINE REFERENCE	ELEVATION	SERVICE	COMMENT
NORTH WALL	4"Ø	17'-6 1/4"	WEST OF COL LINE 2	0'-7 1/4" ABOVE FF	MECH	SLEEVED
	4"Ø	17'-6 1/4"	WEST OF COL LINE 2	3'-2 1/4" ABOVE FF	MECH	SLEEVED
	8"Ø	14'-1"	EAST OF COL LINE 1	9'-3 3/4" ABOVE FF	MECH	SLEEVED
	8"Ø	13'-1"	EAST OF COL LINE 1	11'-1 3/4" ABOVE FF	MECH	SLEEVED
	3"Ø	5'-8"	EAST OF COL LINE 1	1'-0" ABOVE FF	FIRE	SLEEVED
	1 1/4"Ø	13'-8"	EAST OF COL LINE 1	1'-6" ABOVE FF	ELEC	SLEEVED
	1 1/4"Ø	18'-0"	EAST OF COL LINE 1	10'-0" ABOVE FF	ELEC	SLEEVED
	1 1/4"Ø	18'-6"	EAST OF COL LINE 1	9'-6" ABOVE FF	ELEC	SLEEVED
	6"H X 12"W	14'-0"	EAST OF COL LINE 1	11'-6" ABOVE FF	ELEC	SLEEVED
EAST WALL	6"Ø	18'-4"	NORTH OF COL LINE A	8'-11 3/4" ABOVE FF	MECH	SLEEVED
	6"Ø	20'-4"	NORTH OF COL LINE A	8'-11 3/4" ABOVE FF	MECH	SLEEVED
	8"Ø	23'-0"	NORTH OF COL LINE A	9'-0 3/4" ABOVE FF	MECH	SLEEVED
	8"Ø	24'-4"	NORTH OF COL LINE A	9'-0 3/4" ABOVE FF	MECH	SLEEVED
	8"Ø	26'-7 3/4"	NORTH OF COL LINE A	9'-0 3/4" ABOVE FF	MECH	SLEEVED
	6"Ø	19'-0"	NORTH OF COL LINE A	11'-2" ABOVE FF	MECH	SLEEVED
	4"Ø	20'-4 1/4"	NORTH OF COL LINE A	11'-0 3/4" ABOVE FF	MECH	SLEEVED
	8"Ø	21'-7 3/4"	NORTH OF COL LINE A	11'-2 1/4" ABOVE FF	MECH	SLEEVED

GENERAL LOCATION	PENETRATION SIZE	HORIZONTAL DISTANCE	COLUMN LINE REFERENCE	ELEVATION	SERVICE	COMMENT
EAST WALL	8"Ø	23'-0"	NORTH OF COL LINE A	11'-2" ABOVE FF	MECH	SLEEVED
	8"Ø	24'-5"	NORTH OF COL LINE A	11'-2" ABOVE FF	MECH	SLEEVED
	8"Ø	25'-7 3/4"	NORTH OF COL LINE A	11'-1 3/4" ABOVE FF	MECH	SLEEVED
	5"Ø	17'-8"	NORTH OF COL LINE A	11'-2" ABOVE FF	MECH	SLEEVED
	6"H X 12"W	2'-2"	NORTH OF COL LINE A	9'-6" ABOVE FF	ELEC	SLEEVED
	1 1/4"Ø	15'-10"	NORTH OF COL LINE A	9'-6" ABOVE FF	ELEC	SLEEVED
WEST WALL	1 1/4"Ø	12'-0"	NORTH OF COL LINE A	1'-6" ABOVE FF	ELEC	SLEEVED
	1 1/4"Ø	6'-0"	NORTH OF COL LINE A	7'-6" ABOVE FF	ELEC	SLEEVED
	1 1/4"Ø	12'-2"	NORTH OF COL LINE A	4'-0" ABOVE FF	ELEC	SLEEVED
	1 1/4"Ø	8'-4"	NORTH OF COL LINE A	10'-0" ABOVE FF	ELEC	SLEEVED
SOUTH WALL	8"Ø	7'-8"	WEST OF COL LINE 2	3'-0" ABOVE FF	FIRE	SLEEVED
	8"Ø	6'-0"	WEST OF COL LINE 2	3'-0" ABOVE FF	FIRE	SLEEVED
	10"Ø	3'-7"	WEST OF COL LINE 2	0'-11" ABOVE FF	FIRE	SLEEVED
	1 1/2"Ø	3'-7"	WEST OF COL LINE 2	7'-0" ABOVE FF	FIRE	SLEEVED
	1 1/4"Ø	8'-0"	WEST OF COL LINE 2	12'-0" ABOVE FF	ELEC	SLEEVED
	1 1/4"Ø	18'-6"	EAST OF COL LINE 1	10'-0" ABOVE FF	ELEC	SLEEVED
	1 1/4"Ø	21'-10"	EAST OF COL LINE 1	1'-6" ABOVE FF	ELEC	SLEEVED

NO	DATE	CLASS REV	ADC	DESCRIPTION	DWN	DES	CHKD	SUB	APP
1	7/7/14	U		"ADDITION OF DOOR"	JGF	DM	CE	MT	

AECOM

RLWTF–UP LOW LEVEL WASTE SUBPROJECT

STRUCTURAL SCHEDULE

DRAWN	G.FLORES
DESIGN	C.ROSENBERGER
CHECKED	D.AKELROD
DATE	05-06-14

BLDG. 251 TA-50

SUBMITTED: MANNY TARIN

APPROVED FOR RELEASE: ED ARTIGLIA

Los Alamos NATIONAL LABORATORY — PO Box 1663, Los Alamos, New Mexico 87545

SHEET S-7201

12 OF 118

CLASSIFICATION | REVIEWER | DATE

PROJECT ID 100761 | DRAWING NO C55865 | REV 1

JAMES M. WEEKS — NEW MEXICO — 11364 — REGISTERED PROFESSIONAL ENGINEER

7/07/14

File Location: Y:\DOE PROJECTS\LANL\LANL RLVTF LLW\DRAFTING\MODEL\CADD FILES\C55865-S-7201.DWG
Plotted By: FLORES, GABRIEL Plot Date: Thursday, July 03, 2014

25h27T :

PROJECT DESIGN DATA

OCCUPANCY CLASSIFICATION — IBC 2009 NFPA-101 2009

LLW UTILITY BUILDING	F-1	GENERAL INDUSTRIAL ORDINARY HAZARD

CONSTRUCTION TYPE

251-LLW UTILITY BUILDING	II-B	II (000)

FLOOR AREA – ACTUAL VS ALLOWABLE

LLW UTILITY BUILDING 251

GROSS AREA	1,152 SF
BASE ALLOWABLE AREA	14,500 SF

SPRINKLERS USED FOR 1 HR FIRE RESISTIVE CONSTRUCTION	NO
CORRIDOR RATINGS	UNRATED
SPRINKLER CORRIDOR RATING SUBSTITUTION	NO
HAZARD CLASSIFICATION	LESS THAN HAZ CAT 3
PERFORMANCE CATEGORY	PC-1
SEISMIC CATEGORY	SITE CLASS D

STATE OF NEW MEXICO
Richard W. Kaselow
5-14-2014
NO. 2648
REGISTERED ARCHITECT

NO	DATE	CLASS REV	ADC	DESCRIPTION	DRW	DES	CHKD	SUB	APP

AECOM

RLWTF-UP LOW LEVEL WASTE SUBPROJECT

PROJECT DESIGN DATA

BLDG. 251 TA-50

DRAWN	T. VUET
DESIGN	T. LEACH
CHECKED	R. KASELOW
DATE	5/8/14

SUBMITTED MANNY TARIN

APPROVED FOR RELEASE ED ARTIGLIA

Los Alamos NATIONAL LABORATORY PO Box 1663 Los Alamos, New Mexico 87545

SHEET A-0201

13 OF 118

CLASSIFICATION | REVISION | DATE

PROJECT ID	DRAWING NO	REV
100761	C55865	0

85198

File Location: P:_ITCH\CLIENT\LA629621 - RLVTF\100 CAD\102 CAD DIRECTORY\ACCDW\LLV UTILITY BUILDING\SHEET\55865-A-0201-R0.DWG
Plotted By: BROWN, DARLENE; Plot Date: Wednesday, May 07, 2014

LEGEND (NOT ALL SYMBOLS WILL APPLY TO THIS PROJECT)

- 8'-0" — DIMENSION LINE WITH WITNESS LINES AND DIMENSION
- CENTER LINE
- LEADER LINE
- FUTURE CONSTRUCTION
- EXISTING CONSTRUCTION
- NEW CONSTRUCTION
- BACKGROUND, NEW CONST.
- HIDDEN LINE
- MATCH LINE
- EXISTING TO BE REMOVED
- 1 HOUR FIRE RATED WALL
- 2 HOUR FIRE RATED WALL

CODE PLAN SYMBOLS

IBC/NFPA101 TRAVEL DISTANCE TO COMMON PATH OF TRAVEL AND AN EXIT

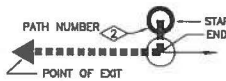

DOE-STD-1066 TRAVEL DISTANCE TO EXIT OR NON-RAD HVAC AIR ZONE

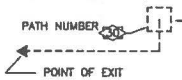

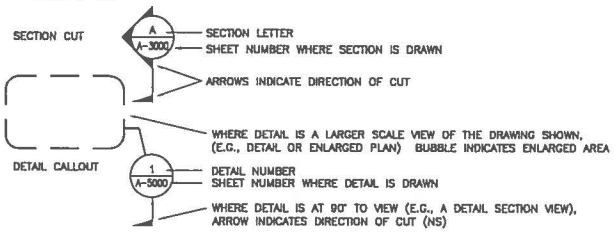

- ROOM NAME & NUMBER — NAME 100
- DOOR NUMBER (NS) — 100
- WINDOW NUMBER — 100
- COLUMN LINE GRIDS — 1 / A
- KEYED NOTE — 1
- TOILET, SHOWER AND MISC. ACCESSORIES SPEC 10-2800 (NS) — W1
- WALL TAG (SEE SHEET A-7101) — A
- HAND AND FOOT MONITOR (NS)
- PERSONNEL CONTAMINATION MONITOR (NS) — PCM
- HAMPERS (NS)
- ROOF DRAIN & OVERFLOW
- LIGHTS (DASHED SUSPENDED)
- EMERGENCY LIGHTS (DASHED SUSPENDED)
- HVAC DIFFUSER (NS) — SUPPLY / RETURN
- FIRE SPRINKLER HEAD (NS)
- SIDEWALL FIRE SPRINKLER HEAD (NS)
- BOLLARD (NS)
- FIRE EXTINGUISHER
- ELEVATION RELATIVE TO LOWER LEVEL FF=100'-0" — 100'-00"
- ELEVATION OF FLOOR TOPPING ABOVE DATUM — 1"
- SLOPE ARROW (POINTS DOWN.)
- FIRE FLOW DRAIN
- EXIT SIGN
- CONCRETE
- EARTH
- PRE-FINISHED METAL ROOF
- STAIR RUN (NS)

ABBREVIATIONS (NOT ALL SYMBOLS WILL APPLY TO THIS PROJECT)

ADA	AMERICANS WITH DISABILITIES ACT
ADMIN	ADMINISTRATION
AFF	ABOVE FINISHED FLOOR
BRD	BOARD
BLDG	BUILDING
BOT	BOTTOM
BS	BOTH SIDES
CL ℄	CENTERLINE
CLG	CEILING
CUB	CENTRAL UTILITY BUILDING
CHEM	CHEMICAL
CLR	CLEAR
CMU	CONCRETE MASONRY UNIT
COL	COLUMN
COMM	COMMUNICATIONS
CONC	CONCRETE
CONT	CONTINUOUS
DIA, ø	DIAMETER
DIM	DIMENSION
DN	DOWN
EA	EACH
EF	EACH FACE
EJ	EXPANSION JOINT
ELEC	ELECTRIC, ELECTRICAL
ELEV	ELEVATION
EQUIP	EQUIPMENT
EXP	EXPANSION
ES	EACH SIDE
EW	EACH WAY
EWC	ELECTRIC WATER COOLER
EXP	EXPANSION JOINT
FD	FLOOR DRAIN
FE	FIRE EXTINGUISHER
FEC	FIRE EXTINGUISHER CABINET
FF	FINISH FLOOR
FG	FINISH GRADE
FIN	FINISH
FOC	FACE OF CONCRETE
FOS	FACE OF STUD
FR	FRAME
FRG	FIRE RESISTIVE GLAZING (NOT WIRE)
GA	GAUGE
GB	GRAB BAR
GFE	GOVERNMENT FURNISHED EQUIPMENT
GYP BD	GYPSUM BOARD
HDWR, HW	HARDWARE
HFM	HAND AND FOOT MONITOR
HM	HOLLOW METAL
HORIZ	HORIZONTAL
HR	HOUR
HT	HEIGHT
HVAC	HEATING, VENTILATING AND AIR CONDITIONING
HW	HARDWARE
IBC	INTERNATIONAL BUILDING CODE (2009)
INSUL	INSULATION
JAN	JANITOR('S)
L	ANGLE
LAB	LABORATORY
LAV	LAVATORY
LSC	LIFE SAFETY CODE (NFPA-101, 2009)
MATL	MATERIAL
MAX	MAXIMUM
MECH	MECHANICAL
METL	METAL
MIN	MINIMUM, MINUTE
MISC	MISCELLANEOUS
MO	MASONRY OPENING
MTD	MOUNTED
NFPA	NATIONAL FIRE PROTECTION ASSOCIATION
NIC	NOT IN CONTRACT
NO/#	NUMBER
NOM	NOMINAL
NS	NON STANDARD
NTS	NOT TO SCALE
OC	ON CENTER
OD	OUTSIDE DIAMETER / OVERFLOW DRAIN
OH	OPPOSITE HAND
OHM	OCCUPATIONAL HEALTH MONITORING
OPS	OPERATIONS
PCM	PERSONNEL CONTAMINATION MONITOR, PERSONNEL CONTAMINATION MONITORING
PL	PLATE
PLAM	PLASTIC LAMINATE
PS	PULL STATION
R	RISER
RAD	RADIUS
RD	ROOF DRAIN
REINF	REINFORCING
REQD	REQUIRED
RM	ROOM
REQD	REQUIRED
RO	ROUGH OPENING
RWL	RAIN WATER LEADER
SC	SOLID CORE
SCHED	SCHEDULE
SIM	SIMILAR
STL	STEEL
SPEC	SPECIFICATION
SQ	SQUARE
SS	STAINLESS STEEL
STD	STANDARD
STOR	STORAGE
STRUC	STRUCTURE, STRUCTURAL
T	TREAD
THK	THICK, THICKNESS
TOC	TOP OF CONCRETE
TOS	TOP OF STEEL
TOW	TOP OF WALL
TRU	TRANSURANIC
TS	TUBE STEEL
TYP	TYPICAL
UON	UNLESS OTHERWISE NOTED
VERT	VERTICAL
W/	WITH
W/O	WITHOUT
WC	WATER CLOSET
WT	WEIGHT

LEGEND (CONTINUED)

- ACCESS PANEL
- CABLE TRAY
- CEILING GRID W/ SS PANELS @ PROCESS AREA

STATE OF NEW MEXICO — Richard W. Kasslow — 5-14-2014 — NO. 2648 — REGISTERED ARCHITECT

NO	DATE	CLASS REV	ABC	DESCRIPTION	DRN	DES	CHKD	SUB	APP

AECOM

RLWTF-UP LOW LEVEL WASTE SUBPROJECT

LEGEND AND ABBREVIATIONS

BLDG. 251 TA-50

DRAWN	T. VUET
DESIGN	T. LEACH
CHECKED	R. KASSLOW
DATE	5/8/14

SUBMITTED: MANNY TARIN — APPROVED FOR RELEASE: ED ARTIGLIA

Los Alamos NATIONAL LABORATORY — PO Box 1663, Los Alamos, New Mexico 87545

SHEET A-0202 — 14 OF 118

CLASSIFICATION | REVIEWER | DATE

PROJECT ID 100761 — DRAWING NO C55865 — REV 0

File Location: P:_TECHNOLOGY\ADS\PROJ - RLWTF\SSS CAD\SSS CAD DIRECTORY\ACCORD\LLV UTILITY BUILDING\A\SHEET\C55865-A-0202-RSLDWG
Plotted By: BRODRICK, DARLENE PM Date: Wednesday, May 07, 2014

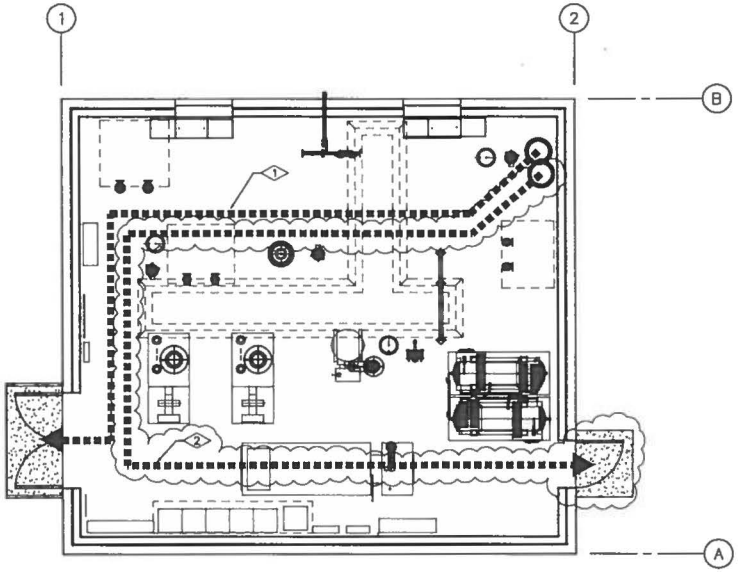

LIFE SAFETY PLAN

0' 1' 2' 4' 8' 16'
1/4"=1'-0"

LOW-LEVEL WASTE UTILITY BUILDING SAFETY EGRESS PATHS

NFPA & IBC FIRE EGRESS REQUIREMENTS

PATH NUMBER	OCCUPANCY TYPE (IBC LISTED)	MAX TOTAL PATH	ACTUAL TOTAL PATH	MAX COMMON PATH	ACTUAL COMMON PATH
1	F-1	100'-0"	50'-0"	100'-0"	50'-0"
2	F-1	100'-0"	78'-8"	100'-0"	78'-8"

GENERAL NOTES

1. IF THIS SHEET IS NOT 24"x 36", THEN IT IS A REDUCED SIZE PLOT. USE GRAPHIC SCALE ACCORDINGLY.
2. EGRESS PATHS START AT 1'-0" FROM THE MOST DISTANT CORNER TO THE NEAREST EXIT.
3. PROVIDE A MINIMUM HEADROOM OF 80" (6'-8") AND MINIMUM WIDTH OF 36" (3'-0") FOR ALL EGRESS PATHS IN PROCESS AREA.

UTILITY BUILDING PROJECT DESIGN DATA				
HAZARD CLASSIFICATION				HAZCAT-3
SEISMIC DESIGN CATEGORY				PERFORMANCE AND SEISMIC DESIGN CATEGORY PC-1
CONSTRUCTION TYPES				
IBC - 2009		SECTION 602		II-B
NFPA - 2009		TABLE 4.1.1		II (000)
OCCUPANCY TYPES				
	IBC	302		F-1
	NFPA 101	6.1.12 & 40.1.4	GENERAL INDUSTRIAL-ORDINARY HAZARD	
OCCUPANCY SEPARATIONS				NA
FLOOR AREA: ALLOWABLE (SF)				
BASE AREA	IBC	TABLE 503	F-1 IN II-B - 15,500	
INCREASES				
FRONTAGE /SPRINKLERS		IBC 506.1	NOT NEEDED TO MEET REQUIREMENTS	
OCCUPANCY LOAD				
NET AREA IN SF	IBC	TABLE 1004.1.1		
	FACTORY AND INDUSTRIAL AREAS		100 SF/PER OCCUPANT	988 SF / 10
TRAVEL DISTANCES				
SPRINKLERED				YES
TOTAL TRAVEL DISTANCE (FT)				
F-1	IBC	TABLE 1016.1		250 FT
GENERAL INDUSTRIAL	NFPA 101	TABLE A-7.6		250 FT
COMMON PATH OF TRAVEL (FT)				
F-1	IBC	1014.3 EX 1		100 FT
GENERAL INDUSTRIAL	NFPA 101	TABLE A-7.6		100 FT
DEAD END CORRIDORS				
F-1	IBC	1017.3 EX 2		50 FT
GENERAL INDUSTRIAL	NFPA 101	TABLE A-7.6		50 FT
FIRE SEPARATIONS (HRS)				
ROOF / CEILING RATING				0 HR
FLOOR / CEILING RATING				NA
EXTERIOR WALL				0 HR
SPRINKLERS USED FOR 1 HR RESISTIVE CONSTRUCTION				NO
CORRIDOR RATINGS				NA
SPRINKLER CORRIDOR RATING SUBSTITUTION				NA

"PRIORITY DRAWING"

NO	DATE	CLASS REV	ADC	DESCRIPTION	DRN	DES	CHKD	SUB	APP
1	7/7/14	U		ADDED DOOR AND EGRESS PATH	AM		AM		

AECOM

RLWTF-UP LOW LEVEL WASTE SUBPROJECT

LIFE SAFETY PLAN

BLDG. 251 TA-50

DRAWN	T. VUET
DESIGN	T. LEACH
CHECKED	R. KASELOW
DATE	9/8/14

SUBMITTED: MANNY TARIN
APPROVED FOR RELEASE: ED ARTIGLIA

Los Alamos NATIONAL LABORATORY, PO Box 1663, Los Alamos, New Mexico 87545

SHEET A-1200
15 OF 118

CLASSIFICATION | REVISION | DATE

PROJECT ID 100761 | DRAWING NO C55865 | REV 1

STATE OF NEW MEXICO
Richard W. Kaselow
7-7-2014
NO. 2648
REGISTERED ARCHITECT

P:_TECHNOLOGY\2013\251 - RLWTF_ADD CAD\ADD CAD\ADD CAD\

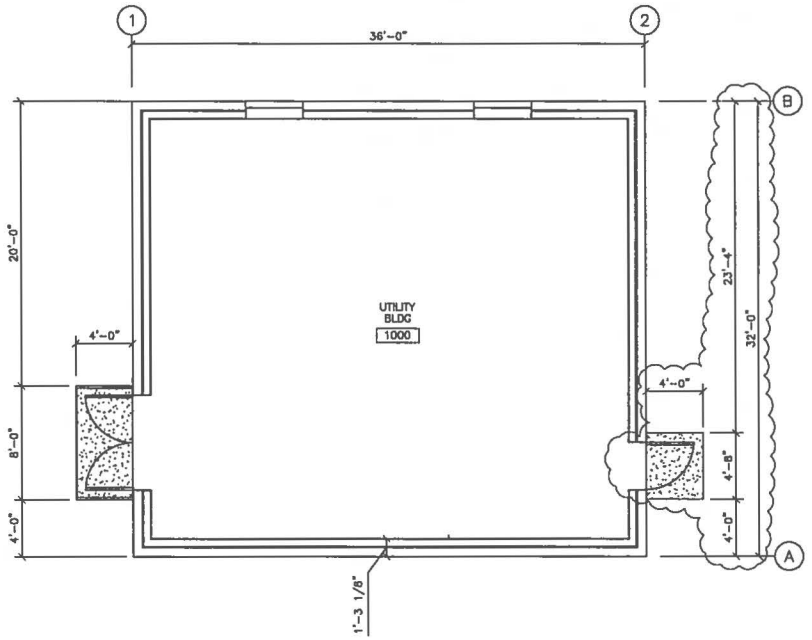

FLOOR PLAN OF RECORD

0' 1' 2' 4' 6' 8'

1/4"=1'-0"

GENERAL NOTES

1. IF THIS SHEET IS NOT 24" X 36", THEN IT IS A REDUCED SIZE PLOT. USE GRAPHIC SCALE ACCORDINGLY.
2. GROSS MEASURED AREA SHALL MEAN THE TOTAL AREA OF A BUILDING ENCLOSED BY THE DOMINANT PORTION, EXCLUDING PARKING AREAS AND LOADING DOCKS (OR PORTION OF SAME) OUTSIDE THE BUILDING. CALCULATED ON A FLOOR BY FLOOR BASIS.
3. GROSS BUILDING AREA SHALL MEAN THE TOTAL CONSTRUCTED AREA OF A BUILDING.

ROOM	ROOM NUMBER	ROOM AREA
TOTAL NET AREA	1000	988 SF
TOTAL GROSS BUILDING AREA		1,152 SF

"PRIORITY DRAWING"

NO	DATE	CLASS REV	ADC	DESCRIPTION	DRWN	DES	CHKD	SUB	APP
1	7/7/14	U		ADDED DOOR TO EAST WALL	AT	MT	DK	MT	

AECOM

RLWTF–UP LOW LEVEL WASTE SUBPROJECT

FLOOR PLAN OF RECORD

DRAWN	T. VUET
DESIGN	T. LEACH
CHECKED	R. KASELOW
DATE	5/8/14

BLDG. 251 TA-50

SUBMITTED	APPROVED FOR RELEASE
MANNY TARIN	ED ARTIGLIA

Los Alamos NATIONAL LABORATORY PO Box 1663 Los Alamos, New Mexico 87545

SHEET A–1201

16 OF 118

CLASSIFICATION	REVIEWER	DATE

PROJECT ID	DRAWING NO	REV
100761	C55865	1

Richard W. Kaselow 7-7-2014 NO. 2648 STATE OF NEW MEXICO REGISTERED PROFESSIONAL ENGINEER

File Location: P:_TECHNOLOGY\55XXX\C55865 - RLWTF\C55865 CAD\C55862 CAD SUBSTRUCTURE\ACCDATA\LV UTILITY BUILDING\A1SHEET\C55865-A-1201-RLDWG
Plotted By: MILLER, ALAN Plot Date: Wednesday, July 02, 2014

T0551

GENERAL NOTES

1. IF THIS SHEET IS NOT 24" X 36", THEN IT IS A REDUCED SIZE PLOT. USE GRAPHIC SCALE ACCORDINGLY.

KEYED NOTES

1. LINE OF WALL BELOW
2. LINE OF ROOF OVERHANG
3. SINGLE-PLY CHLOROSULFONATE-POLYETHYLENE (CSPE) ROOFING FULLY ADHERED
4. AWNING – SEE STRUCTURAL S-5123

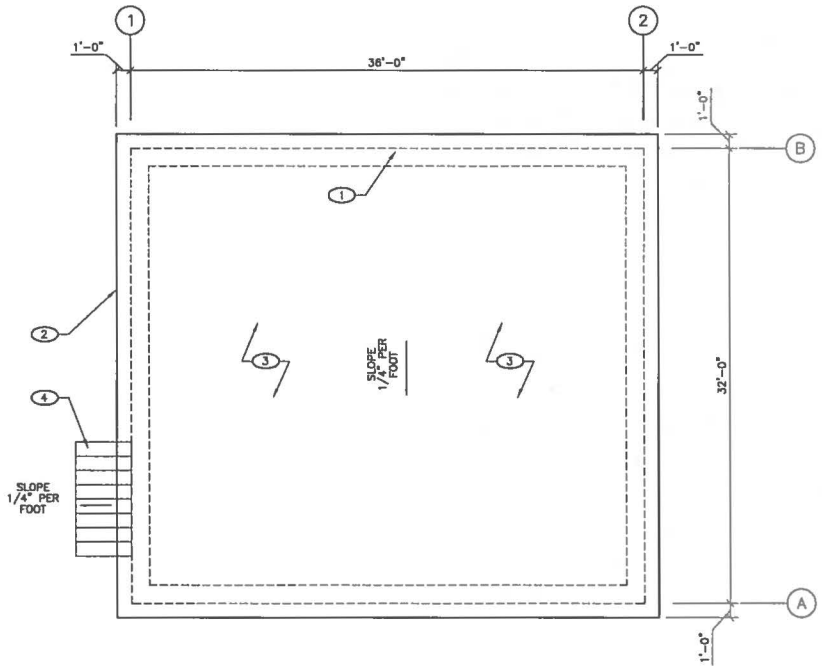

ROOF PLAN OF RECORD

1/4"=1'-0"

"PRIORITY DRAWING"

NO	DATE	CLASS REV	ADC	DESCRIPTION	DWN	DES	CHKD	SUB	APP

AECOM

RLWTF-UP LOW LEVEL WASTE SUBPROJECT

ROOF PLAN OF RECORD

BLDG. 251 TA-50

DRAWN	T. VLIET
DESIGN	T. LEACH
CHECKED	R. KASELOW
DATE	5/8/14

SUBMITTED: MANNY TARIN

APPROVED FOR RELEASE: ED ARTIGLIA

Los Alamos NATIONAL LABORATORY PO Box 1663 Los Alamos, New Mexico 87545

SHEET A-1202

17 OF 118

CLASSIFICATION | REVIEWER | DATE

PROJECT ID 100761 | DRAWING NO C55865 | REV 0

STATE OF NEW MEXICO Richard W. Kaselow 5-14-2014 NO. 2648 REGISTERED ARCHITECT

File Location: P:_TECHNOLOGY\A6229801 - RLWTF\500 CAD\502 CAD DIRECTORY\AECOM\LLW UTILITY BUILDING\A\SHEET\55865-A-1202-R0.DWG
Plotted By: BROCKMAN, DARLENE; Plot Date: Wednesday, May 07, 2014

: 12502

GENERAL NOTES

1. IF THIS SHEET IS NOT 24"x 36", THEN IT IS A REDUCED SIZE PLOT. USE GRAPHIC SCALE ACCORDINGLY.
2. PROVIDE AND INSTALL ALL SYSTEMS SHOWN UNLESS NOTED OTHERWISE.

KEYED NOTES

1. 8" CMU WALL (TYP).
2. 4'-0" X 6'-0" LOUVERS (TYP. – SEE ELEVATIONS).
3. 5/8" GYPSUM BOARD ON 6" METAL STUDS AT 16" OC WITH FULL BATT INSULATION (TYP), TAPE, TEXTURE, AND PAINT.
4. AWNING ABOVE – SEE STRUCTURAL S-5123
5. MECHANICAL EQUIPMENT
6. INSULATED HOLLOW METAL DOOR
7. 4' X 8' CONCRETE FLATWORK AT DOUBLE-DOOR

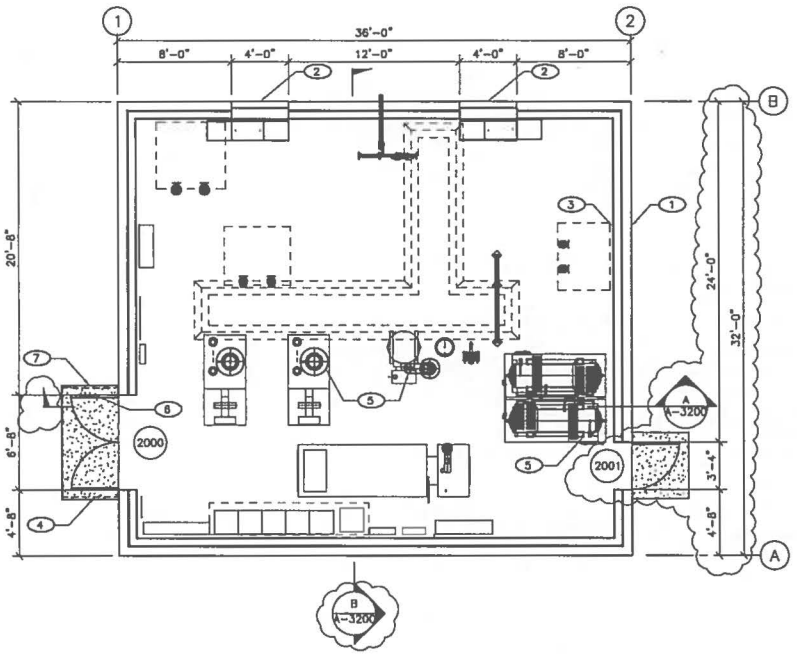

FLOOR PLAN

1/4"=1'-0"

NO	DATE	CLASS REV	ADC	DESCRIPTION	DWN	DES	CHKD	SUB	APP
1	7/7/14	U		ADDED DOOR TO EAST WALL	AT	MT	TK	MT	

AECOM

RLWTF-UP LOW LEVEL WASTE SUBPROJECT

FLOOR PLAN

BLDG. 251 TA-50

DRAWN	T. VUET
DESIGN	T. LEACH
CHECKED	R. KASELOW
DATE	5/8/14

SUBMITTED: MANNY TARIN

APPROVED FOR RELEASE: ED ARTIGLIA

Los Alamos NATIONAL LABORATORY PO Box 1663 Los Alamos, New Mexico 87545

SHEET A-1250

18 OF 118

CLASSIFICATION | REVIEWER | DATE

PROJECT ID 100761 | DRAWING NO C55865 | REV 1

STATE OF NEW MEXICO Richard W. Kaselow 7-7-2014 NO. 2848 REGISTERED PROFESSIONAL ENGINEER

File Location: P:_TECHNOLOGY\AECOM\RLWTF\500 CAD\502 CAD DIRECTORY\AECOM\LLV UTILITY BUILDING\A\SHEET\55865-A-1250-R1.DWG
Plotted By: GILLESS, ALAN Plot Date: Wednesday, July 02, 2014

1 2 3 4 5 6 7 8

A B C D E F G H

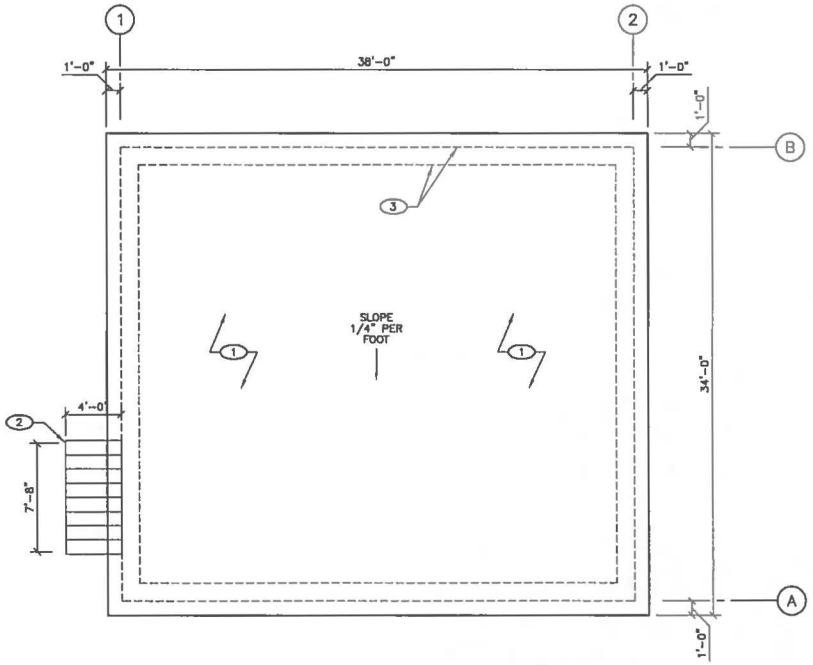

ROOF PLAN

1/4"=1'-0"

GENERAL NOTES

1. IF THIS SHEET IS NOT 24"x 36", THEN IT IS A REDUCED SIZE PLOT. USE GRAPHIC SCALE ACCORDINGLY.
2. PROVIDE AND INSTALL ALL SYSTEMS SHOWN UNLESS NOTED OTHERWISE.

KEYED NOTES

(1) SINGLE-PLY CHLOROSULFONATE-POLYETHYLENE (CSPE) ROOFING FULLY ADHERED

(2) AWNING - SEE STRUCTURAL S-5123

(3) LINE OF WALL BELOW

STATE OF NEW MEXICO
Richard W. Kaselow
5-14-2014
NO. 2648
REGISTERED ARCHITECT

NO	DATE	CLASS REV	ADC	DESCRIPTION	DRN	DES	CHKD	SUB	APP

AECOM

RLWTF-UP LOW LEVEL WASTE SUBPROJECT

ROOF PLAN

BLDG. 251 TA-50

DRAWN	T. VUET
DESIGN	T. LEACH
CHECKED	R. KASELOW
DATE	5/9/14

SUBMITTED: MANNY TARIN

APPROVED FOR RELEASE: ED ARTIGLIA

Los Alamos NATIONAL LABORATORY PO Box 1663 Los Alamos, New Mexico 87545

SHEET A-1252

19 OF 118

CLASSIFICATION | REVISION | DATE

PROJECT ID 100761 | DRAWING NO C55865 | REV 0

125011

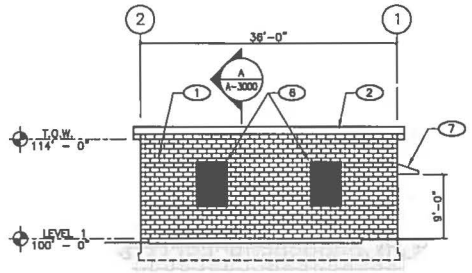

NORTH ELEVATION

1/8"=1'-0"

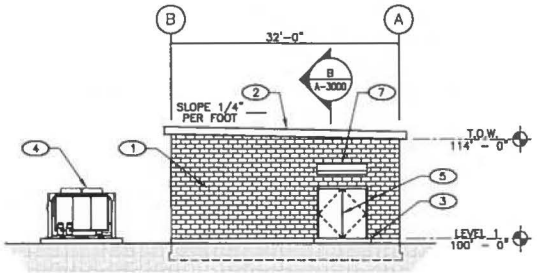

WEST ELEVATION

1/8"=1'-0"

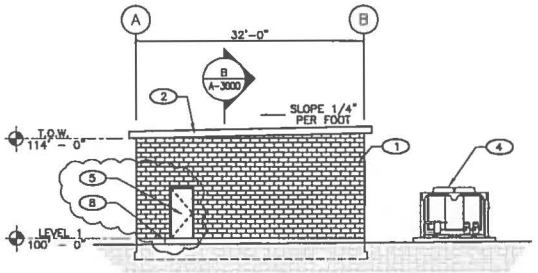

EAST ELEVATION

1/8"=1'-0"

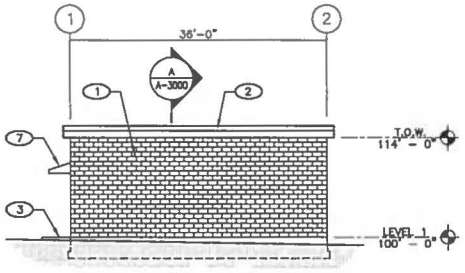

SOUTH ELEVATION

1/8"=1'-0"

GENERAL NOTES

1. IF THIS SHEET IS NOT 24"x 36", THEN IT IS A REDUCED SIZE PLOT. USE GRAPHIC SCALE ACCORDINGLY.
2. PROVIDE AND INSTALL ALL SYSTEMS SHOWN UNLESS NOTED OTHERWISE.
3. 7,256.00' ABOVE MEAN SEA LEVEL (AMSL) = 100.00' AFF.
4. PROVIDE TWO BUILDING STRUCTURE SIGNS PER SPECIFICATIONS SECTION 10 1405 AND ESM SECTION B-C, G2040 2.3. COORDINATE WITH LANL FOR LOCATIONS.

KEYED NOTES

1. 8" CMU BLOCK WALL WITH EXTERIOR SEALANT (TYPICAL)
2. METAL FASCIA AND SOFFIT
3. 4' X 8' CONCRETE FLATWORK
4. MECHANICAL EQUIPMENT
5. HOLLOW METAL DOOR AND FRAME
6. 6'-0" X 4'-0" LOUVER
7. AWNING – SEE STRUCTURAL S-5123
8. 4'-0" X 4'-8" CONCRETE FLATWORK

NO	DATE	CLASS REV	ADC	DESCRIPTION	DRN	DES	CHKD	SUB	APP
1	7/7/14	U		ADDED DOOR TO EAST ELEVATION	MT	MT	MT	MT	

AECOM

RLWTF-UP LOW LEVEL WASTE SUBPROJECT

BUILDING ELEVATIONS

DRAWN	T. VUET
DESIGN	T. LEACH
CHECKED	R. KASELOW
DATE	9/8/14

BLDG. 251 TA-50

SUBMITTED: MANNY TARIN

APPROVED FOR RELEASE: ED ARTIGUA

Richard W. Kaselow, 7-7-2014, NO. 2548, STATE OF NEW MEXICO, REGISTERED PROFESSIONAL ENGINEER

Los Alamos NATIONAL LABORATORY, PO Box 1663, Los Alamos, New Mexico 87545

SHEET A-2200

20 OF 118

CLASSIFICATION | REVIEWER | DATE

PROJECT ID 100761 | DRAWING NO C55865 | REV 1

12505

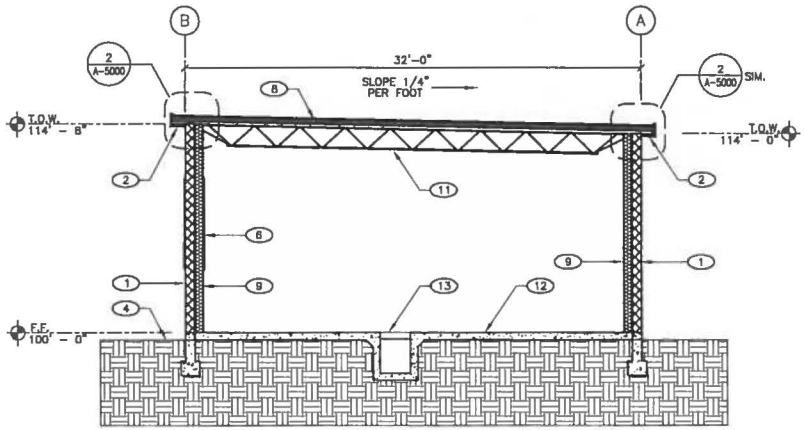

A A-1150 BUILDING SECTION

1/4"=1'-0"

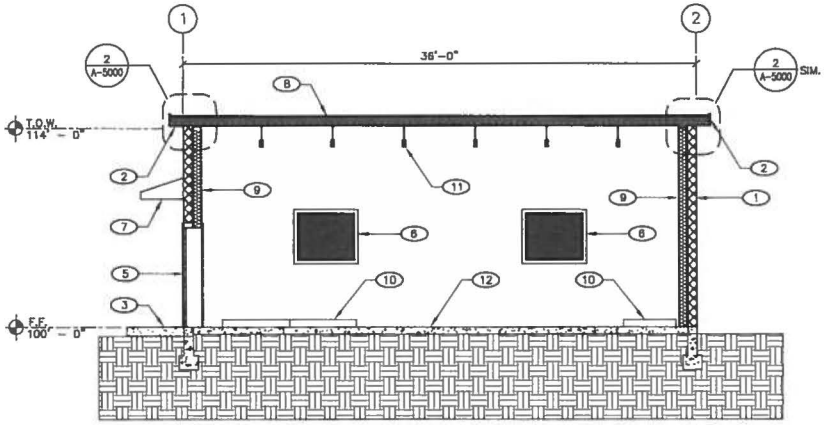

B A-1150 BUILDING SECTION

1/4"=1'-0"

GENERAL NOTES

1. IF THIS SHEET IS NOT 24"x 36", THEN IT IS A REDUCED SIZE PLOT. USE GRAPHIC SCALE ACCORDINGLY.
2. PROVIDE AND INSTALL ALL SYSTEMS SHOWN UNLESS NOTED OTHERWISE.
3. 7,256.00' ABOVE MEAN SEA LEVEL (AMSL) = 100.00' AFF.
4. PROVIDE TWO BUILDING STRUCTURE SIGNS PER SPECIFICATIONS SECTION 10 1405 AND ESM SECTION 8-C, G2040 2.3. COORDINATE WITH LANL FOR LOCATIONS.

KEYED NOTES

1. 8" CMU BLOCK WALL WITH EXTERIOR SEALANT (TYPICAL)
2. METAL FASCIA AND SOFFIT
3. 4' X 8' CONCRETE FLATWORK
4. FINISH GRADE
5. HOLLOW METAL DOOR AND FRAME
6. 8'-0" X 4'-0" LOUVER
7. AWNING - SEE STRUCTURAL S-5123
8. SINGLE-PLY CHLOROSULFONATE-POLYETHYLENE (CSPE) ROOFING FULLY ADHERED ON TOP OF 3/4" SUBSTRATE AND 5 INCHES OF POLYISOCYANURATE RIGID INSULATION R-30
9. 6" METAL STUDS WITH 6" BATT R-30 INSULATION AND 5/8" TYPE 'X' GYPSUM BOARD
10. RAISED CONCRETE SLABS FOR MECHANICAL EQUIPMENT
11. ROOF STRUCTURE - SEE STRUCTURAL S-2200
12. CONCRETE SLAB - SEE STRUCTURAL S-5210
13. TRENCH

NO	DATE	CLASS REV	ADC	DESCRIPTION	DRN	DES	CHKD	SUB	APP

AECOM

RLWTF-UP LOW LEVEL WASTE SUBPROJECT

BUILDING SECTIONS

DRAWN T. VUET

DESIGN T. LEACH

CHECKED R. KASELOW

DATE 5/8/14

BLDG. 251 TA-50

SUBMITTED MANNY TARIN

APPROVED FOR RELEASE ED ARTIGLIA

Richard W. Kaselow 5-14-2014 NO. 2648 REGISTERED ARCHITECT STATE OF NEW MEXICO

Los Alamos NATIONAL LABORATORY PO Box 1663 Los Alamos, New Mexico 87545

SHEET A-3200

21 OF 118

CLASSIFICATION REVIEWER DATE

PROJECT ID 100761

DRAWING NO C55865

REV 0

File: Lock Box: P:_TECHNOLOGY\ASD\396821 - RLWTF\300 CAD\302 CAD DIRECTORY\ACCDATA\LV UTILITY BUILDING\SHEETS\55865-A-3200-R0.DVG
Plotted By: BROZMAN, DARLENE; Plot Date: Wednesday, May 07, 2014

96506 : 12506

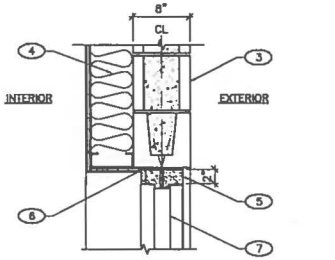

1 A-7000 HEAD/JAMB (SIM)

4" 0 8" 1'
1 1/2"=1'-0"

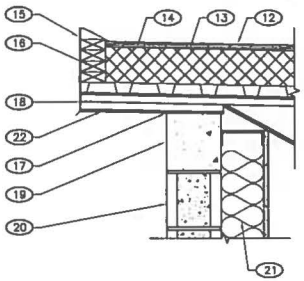

2 A-3000 DETAIL

4" 0 8" 1'
1 1/2"=1'-0"

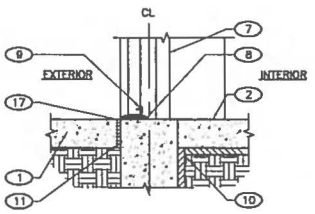

3 A-7000 THRESHOLD

4" 0 8" 1'
1 1/2"=1'-0"

GENERAL NOTES

1. IF THIS SHEET IS NOT 24"x 36", THEN IT IS A REDUCED SIZE PLOT. USE GRAPHIC SCALE ACCORDINGLY.
2. PROVIDE AND INSTALL ALL SYSTEMS SHOWN UNLESS NOTED OTHERWISE.
3. 7,256.00' ABOVE MEAN SEA LEVEL (AMSL) = 100.00' AFF.
4. PROVIDE TWO BUILDING STRUCTURE SIGNS PER SPECIFICATIONS SECTION 10 1405 AND ESM SECTION 8-C, G2040 2.3. COORDINATE WITH LANL FOR LOCATIONS.

KEYED NOTES

1. FLOOR FINISH – AS SCHEDULED
2. CONCRETE STOOP
3. 8" CONCRETE MASONRY UNIT WALL
4. 6" METAL STUD WITH BATT INSULATION AND 5/8" TYPE 'X' GYPSUM BOARD
5. HOLLOW METAL DOOR FRAME WITH JAMB ANCHORS (FULL GROUT)
6. WOOD SHIM WITH SEALANT BOTH SIDES
7. INSULATED METAL DOOR
8. THRESHOLD
9. WEATHERSTRIPPING
10. 1" RIGID INSULATION AT PERIMETER
11. 1/2" EXPANSION JOINT
12. SINGLE-PLY CHLOROSULFONATE-POLYETHYLENE (CSPE) ROOFING FULLY ADHERED
13. 3/4" SUBSTRATE
14. 5" POLYISOCYANURATE RIGID INSULATION R-30
15. METAL FLASHING
16. WOOD BLOCKING
17. SEALANT
18. ROOF JOISTS AND ROOF DECK – SEE STRUCTURAL
19. CONCRETE BEAM – SEE STRUCTURAL S-2200
20. CMU BLOCK WALL – SEE STRUCTURAL S-2200
21. 6" METAL STUDS WITH R-19 BATT INSULATION AND 5/8" TYPE 'X' GYPSUM BOARD
22. METAL SOFFIT

NO	DATE	CLASS REV	ADC	DESCRIPTION	DRN	DES	CHKD	SUB	APP

AECOM

RLWTF-UP LOW LEVEL WASTE SUBPROJECT

DETAILS

DRAWN	T. VUET
DESIGN	T. LEACH
CHECKED	R. KASELOW
DATE	5/8/14

BLDG. 251 TA-50

SUBMITTED MANNY TARIN

APPROVED FOR RELEASE ED ARTIOLA

STATE OF NEW MEXICO Richard W. Kaselow NO. 2648 REGISTERED ARCHITECT

Los Alamos NATIONAL LABORATORY PO Box 1663 Los Alamos, New Mexico 87545

SHEET A-5200

22 OF 118

CLASSIFICATION REVIEWER DATE

PROJECT ID 100761

DRAWING NO C55865

REV 0

C55865

ROOM FINISH SCHEDULE

ROOM		WALLS				FLOOR	CEILING	
NUMBER	NAME	N	S	E	W		MATL	HEIGHT
1000	UTILITY BUILDING	GB|P	GB|P	GB|P	GB|P	C|C	GB|P	SLOPED

FINISH SCHEDULE LEGEND (NOT ALL FINISHES USED IN THIS BUILDING)	
C|C	CONCRETE PAINTED WITH INDUSTRIAL COATING
GB|P	PAINTED GYPSUM BOARD

GENERAL NOTES

1. IF THIS SHEET IS NOT 24"x 36", THEN IT IS A REDUCED SIZE PLOT. USE GRAPHIC SCALE ACCORDINGLY.

DOOR AND FRAME SCHEDULE

MARK	DOOR SIZE WD	DOOR SIZE HGT	DOOR SIZE THK	DOOR TYPE	DOOR MATL	DOOR GLAZING	FRAME TYPE	FRAME MATL	FRAME DETAIL HEAD	FRAME DETAIL JAMB	FRAME DETAIL THRESHOLD	FIRE RATING LABEL	HARDWARE SET NO	NOTES
2000	6'-0"	7'-2"	1 7/8"	A	HM	N/A	1	HM	1/A-5200	1/A-5200	3/A-5200	----	1A	
2001	3'-0"	7'-0"	1 7/8"	B	HM	N/A	2	HM	1/A-5200	1/A-5200	3/A-5200	----	4	

DOOR TYPE

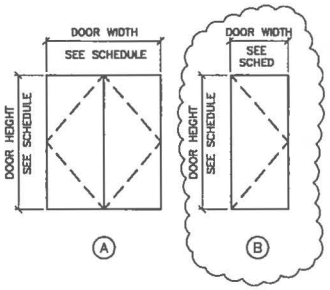

DOOR FRAME TYPE

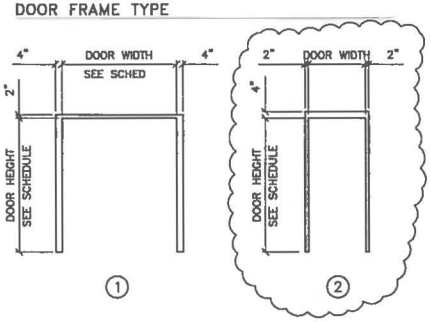

NO	DATE	CLASS REV	ADC	DESCRIPTION	DWN	DES	CHKD	SUB	APP
1	7/7/14	U		ADDED A DOOR TO SCHEDULE	AT	AT	DK	AT	

AECOM

RLWTF-UP LOW LEVEL WASTE SUBPROJECT

SCHEDULES

BLDG. 251 TA-50

DRAWN	T. VUET
DESIGN	T. LEACH
CHECKED	R. KASELOW
DATE	5/5/14

SUBMITTED: MANNY TARIN

APPROVED FOR RELEASE: ED ARTEAGA

Los Alamos NATIONAL LABORATORY — PO Box 1663, Los Alamos, New Mexico 87545

SHEET A-7200

23 OF 118

CLASSIFICATION | REVIEWER | DATE

PROJECT ID 100761 | DRAWING NO C55865 | REV 1

STATE OF NEW MEXICO — Richard W. Kasselow — 1-7-2014 — NO. 2844 — REGISTERED ARCHITECT

12508

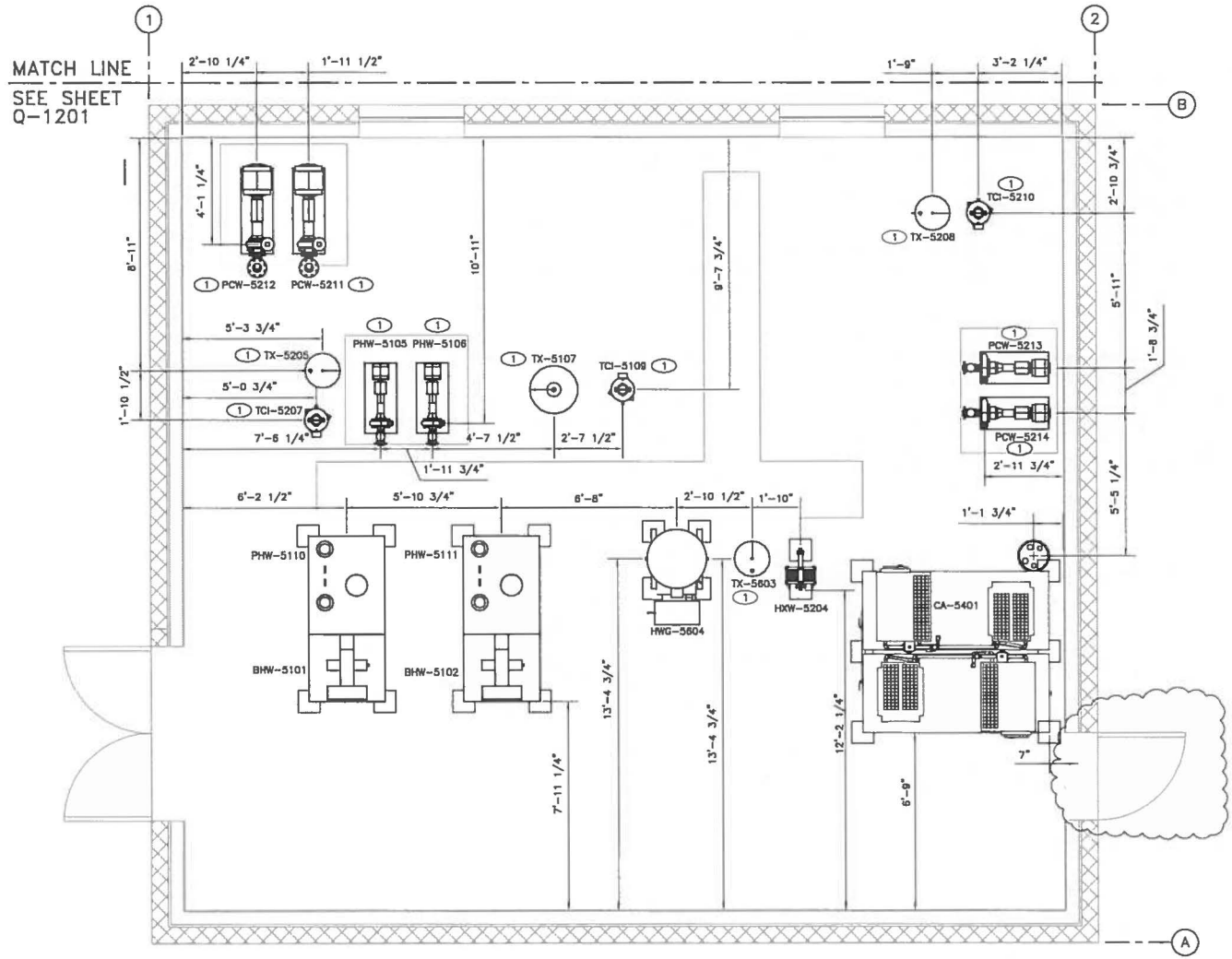

EQUIPMENT PLAN

1/2"=1'-0"

GENERAL NOTES

1. THIS SHEET IS NOT 24"X36", THEN IT IS A REDUCED SIZE PLOT. USE THE GRAPHIC SCALE ACCORDINGLY.
2. SECURE ALL EQUIPMENT BASES TO EMBED PLATES WITH 1/4" FILLET WELD, 1" LONG +/- 2" WITHIN CENTER OF THE EMBED PLATE. UNLESS NOTED OTHERWISE (SEE KEYED NOTES).
3. COORDINATE EMBED PLATE LOCATIONS WITH EQUIPMENT VENDORS.
4. COORDINATE LOCATION OF EMBED PLATES TO ENSURE A 5" MINIMUM DISTANCE FROM CONCRETE EDGE TO EDGE OF PLATE, AND A 5" MINIMUM EDGE DISTANCE TO SCREW ANCHORS.

KEYED NOTES

(1) SECURE TO SLAB/HOUSEKEEPING PAD WITH HILTI KH-EZ ø1/2" X hnom = 4 1/4" SCREW ANCHORS AT EVERY HOLE.

NO	DATE	CLASS REV	ADC	DESCRIPTION	DWN	DES	CHKD	SUB	APP
1	7/7/14	U		ADDED DOOR					

AECOM

RLWTF-UP LOW LEVEL WASTE SUBPROJECT

EQUIPMENT PLAN

BLDG. 251 TA-50

DRAWN	V DAVISON
DESIGN	S MOORE
CHECKED	M TARIN
DATE	5/8/14

SUBMITTED: MANNY TARIN

APPROVED FOR RELEASE: ED ARTIOLIA

Los Alamos NATIONAL LABORATORY PO Box 1663 Los Alamos, New Mexico 87545

SHEET Q-1200

24 OF 118

CLASSIFICATION | REVIEWER | DATE

PROJECT ID 100761 | DRAWING NO C55865 | REV 1

CHARLES MOYERS NEW MEXICO 16836 LICENSED PROFESSIONAL ENGINEER

7-7-14

File Location: W:\RLWTF LOW-LEVEL WASTE FACILITY\500 CAD\C55865 CUB\SHEETS\11 EQUIPMENT\55865-Q-1200-R1.DWG
Plotted By: BRICKMAN, DARLENE; Plot Date: Thursday, July 03, 2014

12509

GENERAL NOTES

1. IF THIS SHEET IS NOT 24"x 36", THEN IT IS A REDUCED SIZE PLOT. USE GRAPHIC SCALE ACCORDINGLY.
2. SECURE CHILLER BASE TO EMBED PLATES WITH 1/4" FILLET WELDS X 1" LONG IN THE APPROXIMATE CENTER OF THE EMBEDDED PLATE.
3. COORDINATE EMBED PLATE LOCATIONS WITH EQUIPMENT VENDOR.

KEYED NOTES

1. OUTLET CONNECTION OF CHILLER.

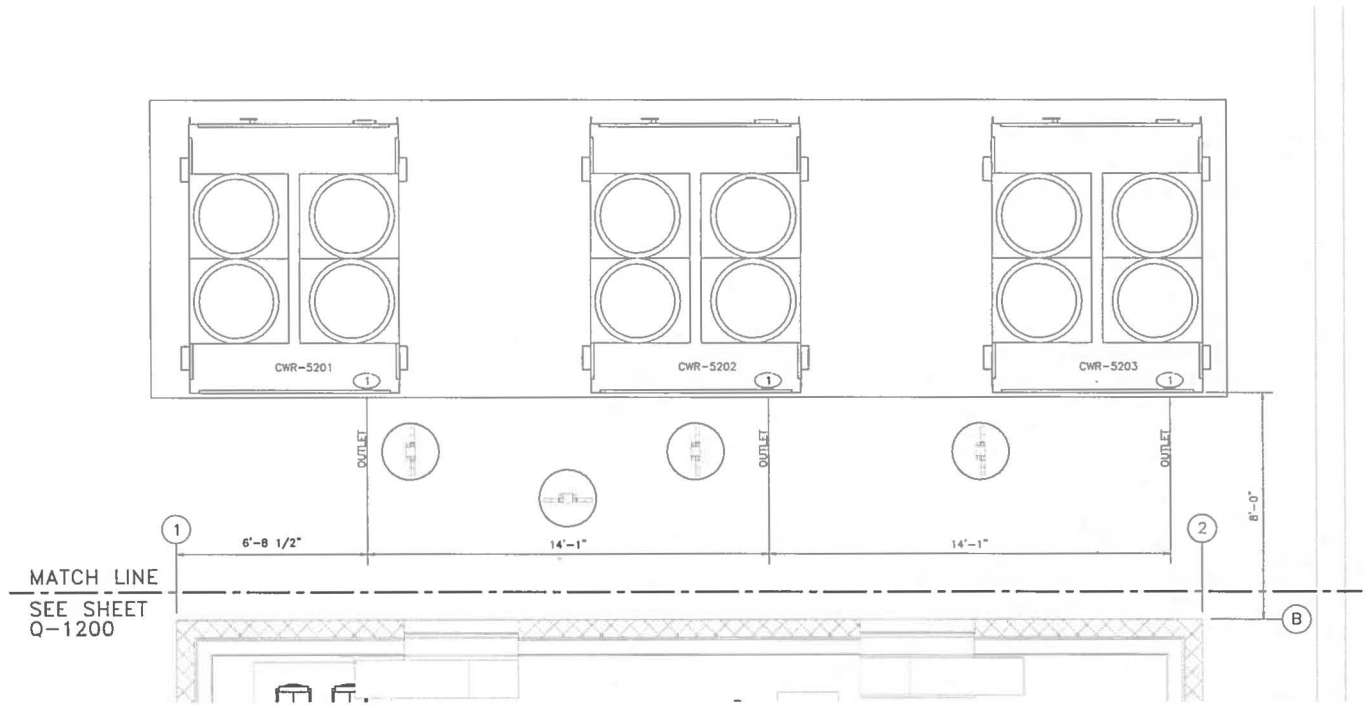

EQUIPMENT PLAN

1/2"=1'-0"

NO	DATE	CLASS REV	ADC	DESCRIPTION	DWN	DES	CHKD	SUB	APP

AECOM

RLWTF-UP LOW LEVEL WASTE SUBPROJECT

EQUIPMENT PLAN

BLDG. 251 TA-50

DRAWN	V DAVISON
DESIGN	S MOORE
CHECKED	M TARIN
DATE	5/8/14

SUBMITTED: MANNY TARIN

APPROVED FOR RELEASE: ED ARTIGLIA

Los Alamos NATIONAL LABORATORY PO Box 1663 Los Alamos, New Mexico 87545

SHEET Q-1201

25 OF 118

CLASSIFICATION | REVIEWER | DATE

PROJECT ID 100761 | DRAWING NO C55865 | REV 0

File Location: P:\RLWTF LOW-LEVEL WASTE FACILITY\500 CAD\C55865 CUB\SHEETS\11 EQUIPMENT\55865-Q-1201-R0.DWG
Plotted By: DAVISON, VANESSA; Plot Date: Friday, May 02, 2014

12510

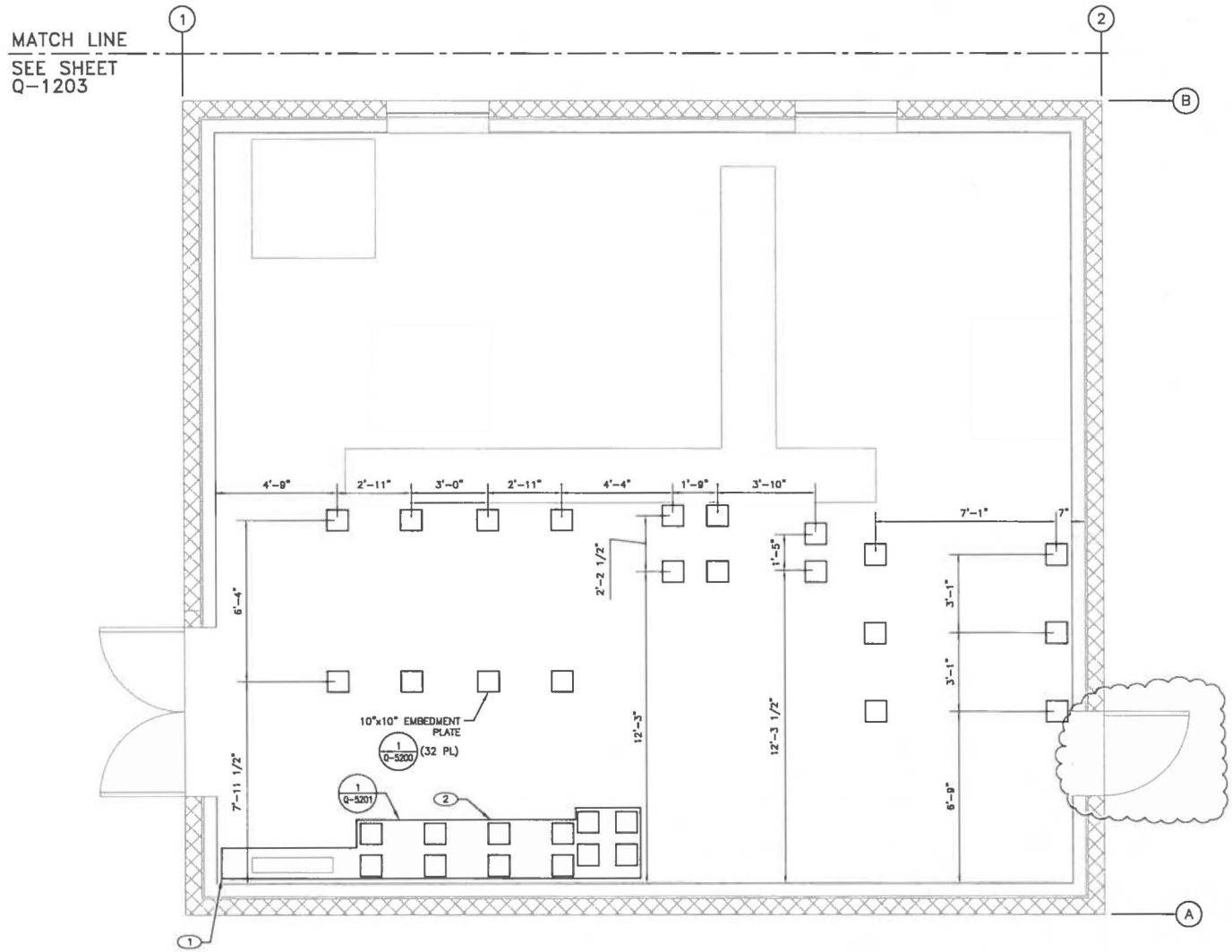

EMBEDMENT PLATE PLAN

1/2"=1'-0"

GENERAL NOTES

1. IF THIS SHEET IS NOT 24"x 36", THEN IT IS A REDUCED SIZE PLOT. USE GRAPHIC SCALE ACCORDINGLY.
2. COORDINATE LOCATION OF EMBEDMENT PLATES WITH EQUIPMENT ANCHORAGE LOCATIONS. EMBEDMENT PLATE LOCATIONS CAN VARY ± 1" TO AVOID REINFORCEMENT IN THE SLAB OR HOUSEKEEPING PADS.
3. COORDINATE LOCATION OF EMBED PLATES TO ENSURE A 5" MINIMUM DISTANCE FROM CONCRETE EDGE TO EDGE OF PLATE.
4. SECURE EQUIPMENT BASES TO EMBED PLATES WITH 1/4" FILLET WELD, 1" LONG, AND +/- 2" WITHIN CENTER OF EMBED PLATE.

KEYED NOTES

1. MATCH LOCATION OF DETAIL 1 ON SHEET Q-5201.
2. 5" HOUSEKEEPING PADS FOR ELECTRICAL EQUIPMENT, REFER TO SHEET S-5200 DETAIL 4.

NO	DATE	CLASS REV	ADC	DESCRIPTION	DWN	DES	CHKD	SUB	APP
1	7/7/14	U		ADDED DOOR					

AECOM

RLWTF-UP LOW LEVEL WASTE SUBPROJECT

EMBEDMENT PLATE PLAN

BLDG. 251 TA-50

DRAWN	V DAVISON
DESIGN	S MOORE
CHECKED	R YOUNG
DATE	5/8/14

SUBMITTED: MANNY TARIN

APPROVED FOR RELEASE: ED ARTIGLIA

Los Alamos NATIONAL LABORATORY PO Box 1663 Los Alamos, New Mexico 87545

SHEET Q-1202

26 OF 118

CLASSIFICATION | REVIEWER | DATE

PROJECT ID 100761 | DRAWING NO C55865 | REV 1

CHARLES MOYERS NEW MEXICO 16836 LICENSED PROFESSIONAL ENGINEER

7-7-14

File Location: W:\RLWTF LOW-LEVEL WASTE FACILITY\500 CAD\C55865 CUB\SHEETS\11 EQUIPMENT\55865-Q-1202-R1.DWG
Plotted By: BROCKMAN, DARLING Plot Date: Thursday, July 03, 2014

: 1 2 5 1 1

GENERAL NOTES

1. IF THIS SHEET IS NOT 24"x 36", THEN IT IS A REDUCED SIZE PLOT. USE GRAPHIC SCALE ACCORDINGLY.
2. SECURE ALL EQUIPMENT BASES TO EMBED PLATES WITH 1/4" FILLET WELD, 1-1/2" LONG, CENTERED WITHIN +/- 2" OF CENTER OF EMBED PLATE.

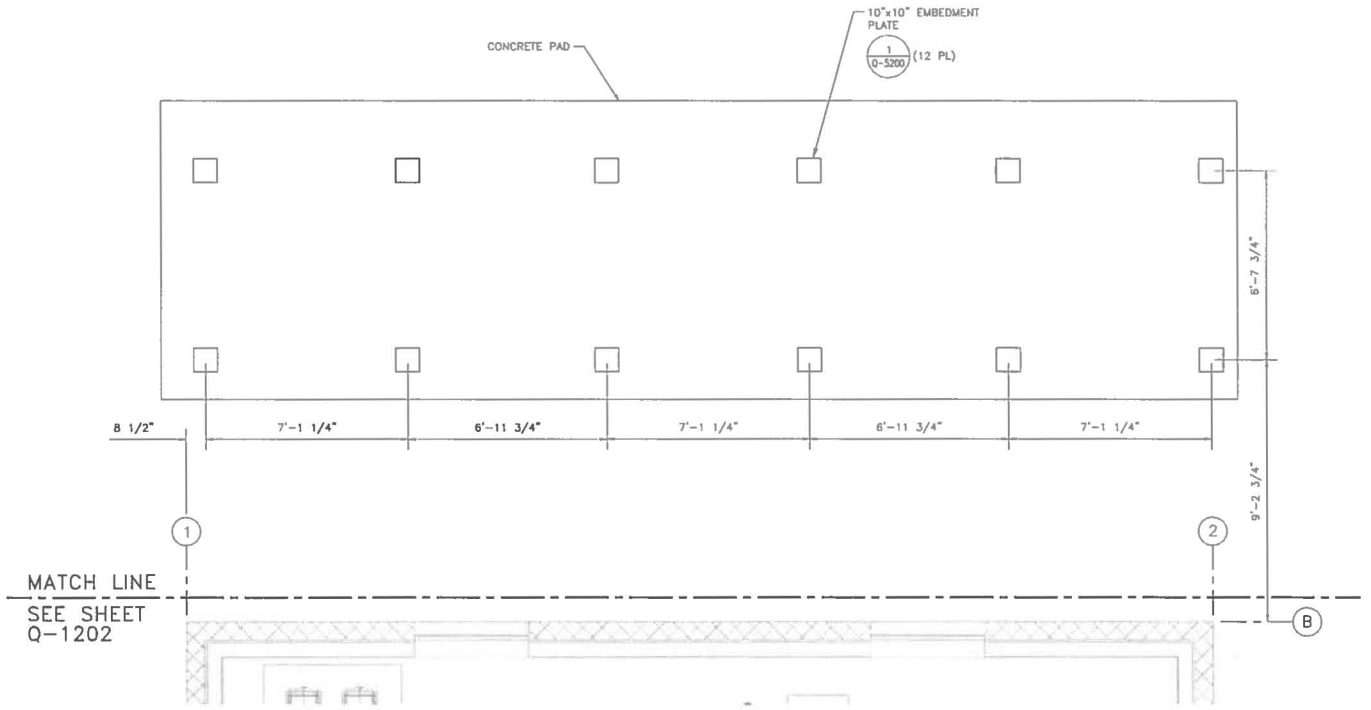

EMBEDMENT PLATE PLAN

1/2"=1'-0"

NO	DATE	CLASS REV	ADC	DESCRIPTION	DWN	DES	CHKD	SUB	APP

AECOM

RLWTF-UP LOW LEVEL WASTE SUBPROJECT

EMBEDMENT PLATE PLAN

DRAWN	V DAWSON
DESIGN	S MOORE
CHECKED	R YOUNG
DATE	5/8/14

BLDG. 251 TA-50

SUBMITTED MANNY TARIN

APPROVED FOR RELEASE ED ARTIGLIA

Los Alamos NATIONAL LABORATORY PO Box 1663 Los Alamos, New Mexico 87545

SHEET Q-1203

27 OF 118

CLASSIFICATION REVIEWER DATE

PROJECT ID 100761

DRAWING NO C55865

REV 0

RHONDA R. YOUNG NEW MEXICO 16922 REGISTERED PROFESSIONAL ENGINEER 5/13/14

12512

File Location: P:\RLWTF LOW-LEVEL WASTE FACILITY\500 CAD\C55865 CAD\SHEETS\11 EQUIPMENT\55865-Q-1203-R0.DWG
Plotted By: DAWSON, VANESSA; Plot Date: Monday, May 12, 2014

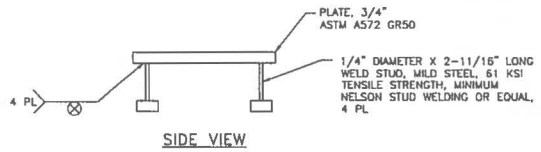

SIDE VIEW

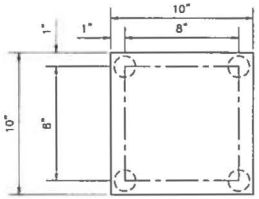

TOP VIEW

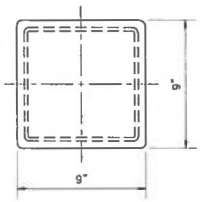

TOP VIEW

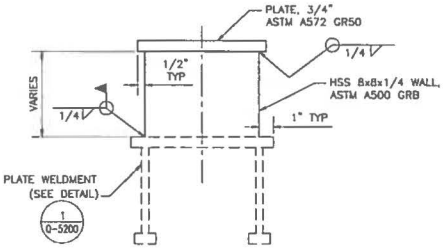

SIDE VIEW

1 Q-5200 / 1 Q-1202 / 1 Q-1203 EMBED PLATE WELDMENT DETAIL
SCALE: NONE

NOTE:
1.) PLACE AT GRADE IN MAIN POUR.

2 Q-5201 HOUSEKEEPING PAD AND EXTENSION WELDMENT DETAIL
SCALE: NONE

NOTE:
1.) LENGTH OF HSS VARIES, DEPENDENT ON HOUSEKEEPING PAD THICKNESS. TOP OF PLATE/CHANNEL SHALL BE FLUSH WITH TOP OF HOUSEKEEPING PAD OR PROUD UP TO 1/4".

NO	DATE	CLASS REV	ADC	DESCRIPTION	DWN	DES	CHKD	SUB	APP

AECOM

RLWTF-UP LOW LEVEL WASTE SUBPROJECT

EMBEDMENT PLATE DETAILS

DRAWN	V DAWSON
DESIGN	S MOORE
CHECKED	R YOUNG
DATE	5/5/14

BLDG. 251 TA-50

SUBMITTED MANNY TARIN

APPROVED FOR RELEASE ED ARTIGLIA

Los Alamos NATIONAL LABORATORY PO Box 1663 Los Alamos, New Mexico 87545

SHEET Q-5200

28 OF 118

CLASSIFICATION REVIEWER DATE

PROJECT ID 100761

DRAWING NO C55865

REV 0

RHONDA P. YOUNG NEW MEXICO 16822 REGISTERED PROFESSIONAL ENGINEER 5/12/14

File Location: P:\RLWTF LOW-LEVEL WASTE FACILITY\500 CAD\C55865 CURVSHEET\11 EQUIPMENT\55865-Q-5200-R0.DWG
Plotted By: JOHNSON, VANESSA; Plot Date: Monday, May 12, 2014

C55865 : 12514

GENERAL NOTES

1. IF THIS SHEET IS NOT 24"X36", THEN IT IS A REDUCED SIZE PLOT. USE THE GRAPHIC SCALE ACCORDINGLY.

KEYED NOTES

(1) MATCH LOCATION OF CORNER IN PLAN VIEW SEE SHEET Q-1202.

(2) BLOCKOUT HOUSE KEEPING PAD AROUND SERVICE CONDUITS THAT PENETRATE THE FLOOR SLAB.

(3) 5" HOUSEKEEPING PADS FOR ELECTRICAL EQUIPMENT, REFER TO SHEET S-5200 DETAIL 4.

(4) WELD CENTERED ON EMBED PLATE TYPICAL.

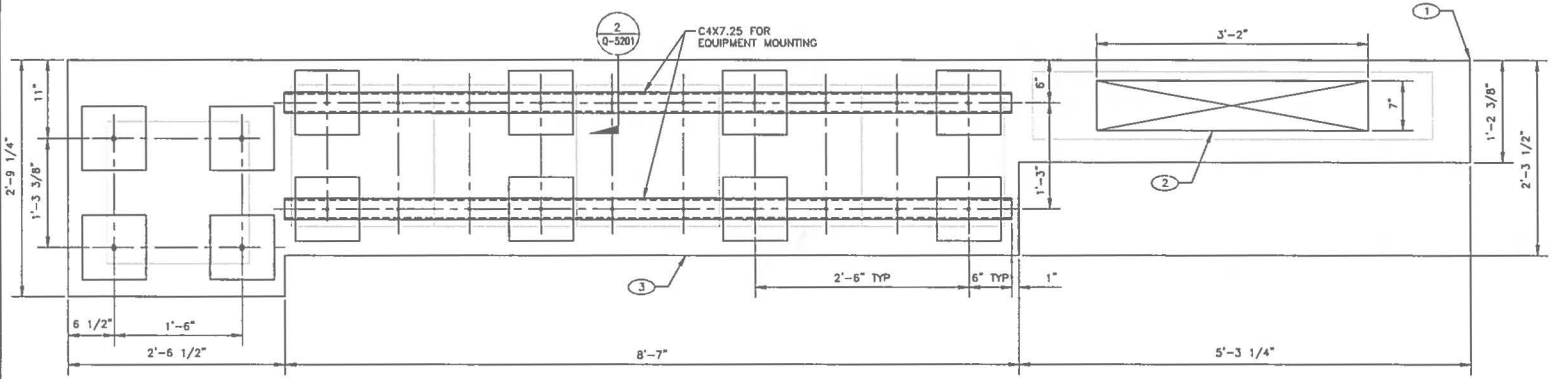

PLAN VIEW

(1) Q-1202 PP-C, MCC-C AND XFMR-4 FLOOR MOUNTING DETAIL
SCALE: NONE

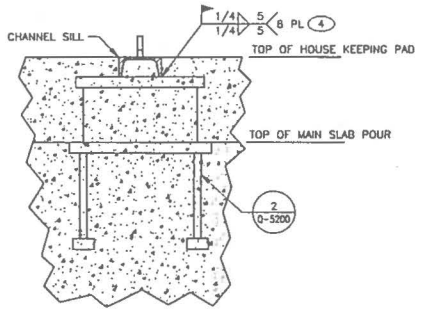

SECTION VIEW

(2) Q-5201 SILL CHANNEL EMBEDMENT DETAIL
0 1" 2" 4" 6" 8"
3"=1'-0"

NO	DATE	CLASS REV	ADC	DESCRIPTION	DWN	DES	CHKD	SUB	APP

AECOM

RLWTF-UP LOW LEVEL WASTE SUBPROJECT

MOTOR CONTROL CENTER MOUNTING DETAILS

DRAWN	V DAVISON
DESIGN	S MOORE
CHECKED	R YOUNG
DATE	5/8/14

BLDG. 251 TA-50

SUBMITTED MANNY TARIN — APPROVED FOR RELEASE ED ARTIGLIA

Los Alamos NATIONAL LABORATORY PO Box 1663 Los Alamos, New Mexico 87545

SHEET Q-5201

29 OF 118

CLASSIFICATION | REVIEWER | DATE

PROJECT ID 100761 | DRAWING NO C55865 | REV 0

File Location: P:\RLWTF LOW-LEVEL WASTE FACILITY\500 CAD\C55865 CUR\SHEETS\11 EQUIPMENT\55865-Q-5201-R0.DWG
Plotted By: SIMSON, WALTER; Plot Date: Friday, May 02, 2014

FIRE PROTECTION AND FIRE ALARM LEGEND

(ALL ABBREVIATIONS SHOWN ARE NOT NECESSARILY USED ON THE DRAWINGS)

ABBREVIATIONS

ACV	ALARM CHECK VALVE
AC	AIR CONDITIONING
AFF	ABOVE FINISHED FLOOR
AFG	ABOVE FINISHED GRADE
AHU	AIR HANDLING UNIT
ALRM	ALARM SIGNAL
BDD	BACK DRAFT DAMPER
BFP	BACKFLOW PREVENTER
BHP	BRAKE HORSEPOWER
BMCS	BUILDING MANAGEMENT CONTROL SYSTEM
BOD	BOTTOM OF DUCT
BOP	BOTTOM OF PIPE
BP	BUILDING PRESSURE
BTUH	BTU PER HOUR
CAV	CONSTANT AIR VOLUME
CO	CLEANOUT
CFM	CUBIC FEET PER MINUTE
CIE	CONTRACTOR INSTALLED EQUIPMENT
CONT.	CONTINUATION
D	DRAIN
DEMO	DEMOLISH, DEMOLITION
DV	DELUGE VALVE
DX	DIRECT EXPANSION
ENT	ENTERING
EP	ELECTRIC-PNEUMATIC
EXH	EXHAUST
°F	DEGREES FAHRENHEIT
FC	FLEXIBLE CONNECTOR
FD	FLOOR DRAIN
FDC	FIRE DEPARTMENT CONNECTION
FDMPR	FIRE DAMPER
F.G.	FILTER GAUGE
FLEX	FLEXIBLE
FM	FACTORY MUTUAL
FMS	FACILITY MANAGEMENT SYSTEM
FPM	FEET PER MINUTE
FT	FLAT TOP
FT.	FEET
GFE	GOVERNMENT FURNISHED EQUIPMENT
GIE	GOVERNMENT INSTALLED EQUIPMENT
GPH	GALLONS PER HOUR
GPM	GALLONS PER MINUTE
HEPA	HIGH EFFICIENCY PARTICULATE ARRESTOR
HD.	HEAD, HUB DRAIN
HGT	HEIGHT
HOA	HAND-OFF-AUTOMATIC
HORIZ	HORIZONTAL
HP	HORSEPOWER
HSTAT	HUMIDISTAT
HTG	HEATING
HTR	HEATER
HVAC	HEATING, VENTILATING AND AIR CONDITIONING
HW	HOT WATER
HX	HEPA EXHAUST AIR
HYD	HYDRANT
HZ	HERTZ
IN	INCHES
KW	KILOWATT
KWH	KILOWATT HOUR
LX	LABORATORY EXHAUST AIR
MA	MIXED AIR
MIN	MINIMUM
NA	NOT APPLICABLE
NAC	NOTIFCATION ALARM CIRCUIT
NIC	NOT IN CONTRACT
NO.	NUMBER (QUANTITY)
OA	OUTSIDE AIR
OBD	OPPOSED BLADE DAMPER
PCM	PROGRAMMABLE CONTROL MODULE
POC	POINT OF CONNECTION TO EXISTING
POR	POINT OF REMOVAL FROM EXISTING
PRV	PRESSURE REDUCING VALVE
PSIG	POUNDS PER SQUARE INCH GAGE
PWC	POTABLE WATER COLD
QTY	QUANTITY
RA	RETURN AIR
RLA	RELIEF AIR
RPM	REVOLUTIONS PER MINUTE
SA	SUPPLY AIR
SLC	SIGNALING LINE CIRCUIT
SP	STATIC PRESSURE (INCHES OF WATER)
SUPR	SUPERVISORY SIGNAL
TX	TOILET EXHAUST
TYP.	TYPICAL
UL	UNDERWRITERS LABORATORIES
V	VALVE
VAC	VOLTS, ALTERNATING CURRENT
VAV	VARIABLE AIR VOLUME
VD	VOLUME DAMPER
VEL	VELOCITY
VTR	VENT THRU ROOF
VX	VACUUM EXHAUST
W/	WITH

FIRE PROTECTION SYMBOLS

SYMBOL	DESCRIPTION
	CHECK VALVE
	SPRINKLER RISER
	INDICATING VALVE
	FIRE DEPARTMENT CONNECTION FREE STANDING
	FIRE DEPARTMENT CONNECTION
	TEST CONNECTION
	FIRE HYDRANT – TWO HOSE OUTLET
	FIRE HYDRANT – ONE HOSE OUTLET
	FIRE HYDRANT – TWO HOSE OUTLET & PUMPER CONN.
	WALL HYDRANT – TWO HOSE OUTLET
	WATER SYSTEM BLOCK VALVE
	REDUCER
	ALARM VALVE
	DRY-PIPE VALVE
	DELUGE VALVE
	ALARM GONG
TS	P&ID, TAMPER SWITCH
FS	P&ID, FIRE SUPPRESSION WATER FLOW SWITCH
PS	P&ID, FIRE SUPPRESSION PRESSURE SWITCH
	SPRINKLER HEAD SIDE WALL
	SPRINKLER HEAD PENDENT W/ DROP NIPPLE
	SPRINKLER HEAD UPRIGHT
	END OF LINE RESTRAINT
	HANGER
K	KNEE BRACKET TO CONCRETE WALL
S	PIPE STAND TO CONCRETE FLOOR
	LONGITUDINAL BRACE TO TRUSS
	LATERAL BRACE TO TRUSS

FIRE PROTECTION SYMBOLS (CONT.)

SYMBOL	DESCRIPTION
CA	COMPRESSED AIR
D	DRAIN
F	FIRE PROTECTION WATER
	DIRECTION OF FLOW
	REDUCER OR INCREASER
	ECCENTRIC REDUCER
	TOP CONNECTION, 45° OR 90°
	BOTTOM CONNECTION, 45° OR 90°
	SIDE CONNECTION
	CAPPED OUTLET
	RISE OR DROP IN PIPE
	RISE IN PIPE
	UNION
	UNIVERSAL TEMPERATURE--PRESSURE FITTING
	OS&Y CONTROL VALVE
	STRAINER
	THERMOMETER
	PRESSURE GAGE
S	GAGE & GAGE COCK
	BALL VALVE
	LINE BREAK
	POST INDICATING VALVE
	INDICATING CONTROL VALVE
	GROUND VALVE
AX	BRANCH LINE
AX / XX	BRANCH LINE NODE
	TRAPEZE HANGER WITH PIPE BELOW
	TRAPEZE HANGER WITH PIPE ABOVE
W	LATERAL AND LONGITUDINAL BRACES AT SAME LOCATION, TO CONCRETE WALL
F	LATERAL AND LONGITUDINAL BRACES AT SAME LOCATION, TO CONCRETE FLOOR

FIRE ALARM SYMBOLS

SYMBOL	DESCRIPTION
FACP	BUILDING FIRE ALARM CONTROL PANEL
FCPS	REMOTE POWER SUPPLY PANEL
ANN	FIRE SYSTEM ANNUNCIATOR
	MANUAL PULL STATION
	PHOTOELECTRIC SMOKE DETECTOR
	DUCT SMOKE DETECTOR (PHOTOELECTRIC)
	DUCT HEAT DETECTOR
XP10	10 ZONE MONITOR MODULE
MM	MONITOR MODULE
R	CONTROL RELAY MODULE
	FIRE ALARM HORN/STROBE
	FIRE ALARM VISUAL DEVICE
S	PRESSURE SWITCH
WF	FLOW SWITCH
T	VALVE SUPERVISORY SWITCH
PM	POST INDICATOR VALVE TAMPER SWITCH
	POST INDICATING VALVE
	INDICATING CONTROL VALVE
	SPRINKLER RISER
	TRANSIENT VOLTAGE SURGE SUPPRESSOR
K	INTERLOCKS TO FIRE SYSTEM FROM OTHER SYSTEMS
	WATERFLOW ALARM GONG

GENERAL SYMBOLS

	ELLIPSE SYMBOL INDICATES A KEYED NOTE THE NUMBER REFERS TO A SPECIFIC NOTE LISTED IN THE KEYED NOTE LIST
1	HYDRAULIC CALCULATION NODE

EQUIPMENT CODE LISTING

ALTITUDE VALVE

ALTV	ALTITUDE VALVE

BACKFLOW PREVENTER

BFP	BACKFLOW PREVENTER

COMPRESSORS

CA	AIR COMPRESSOR (FIRE PROTECTION)

FIRE ALARM

EOLR	END OF LINE RESISTOR
FACP	FIRE ALARM CONTROL PANEL
MM	MONITOR MODULE
NAC	NOTIFICATION APPLIANCE CIRCUIT
SLC	SIGNALING LINE CIRCUIT
VAC	VOLTS ALTERNATING CURRENT
WF	WATER FLOW

BACKFLOW PREVENTER

BFP	BACKFLOW PREVENTER

HVAC UNITS

AHU	AIR HANDLING UNIT

PUMPS

PF	FIRE PUMP

DAVID TOMECEK, NEW MEXICO, 14346, REGISTERED PROFESSIONAL ENGINEER

05-06-2014

NO	DATE	CLASS REV	ADC	DESCRIPTION	DWN	DES	CHKD	SUB	APP

AECOM

RLWTF–UP LOW LEVEL WASTE SUBPROJECT

FIRE PROTECTION ABBREVIATIONS AND SYMBOLS

BLDG. 251 TA-50

DRAWN	C AZHOC
DESIGN	M FERRARCS
CHECKED	B SWEATON
DATE	5/8/14

SUBMITTED MANUEL TARIN

APPROVED FOR RELEASE ED ARTIOLIA

Los Alamos NATIONAL LABORATORY PO Box 1663 Los Alamos, New Mexico 87545

SHEET F-0201

30 OF 118

CLASSIFICATION | REVIEWER | DATE

PROJECT ID 100761

DRAWING NO C55865

REV 0

125515

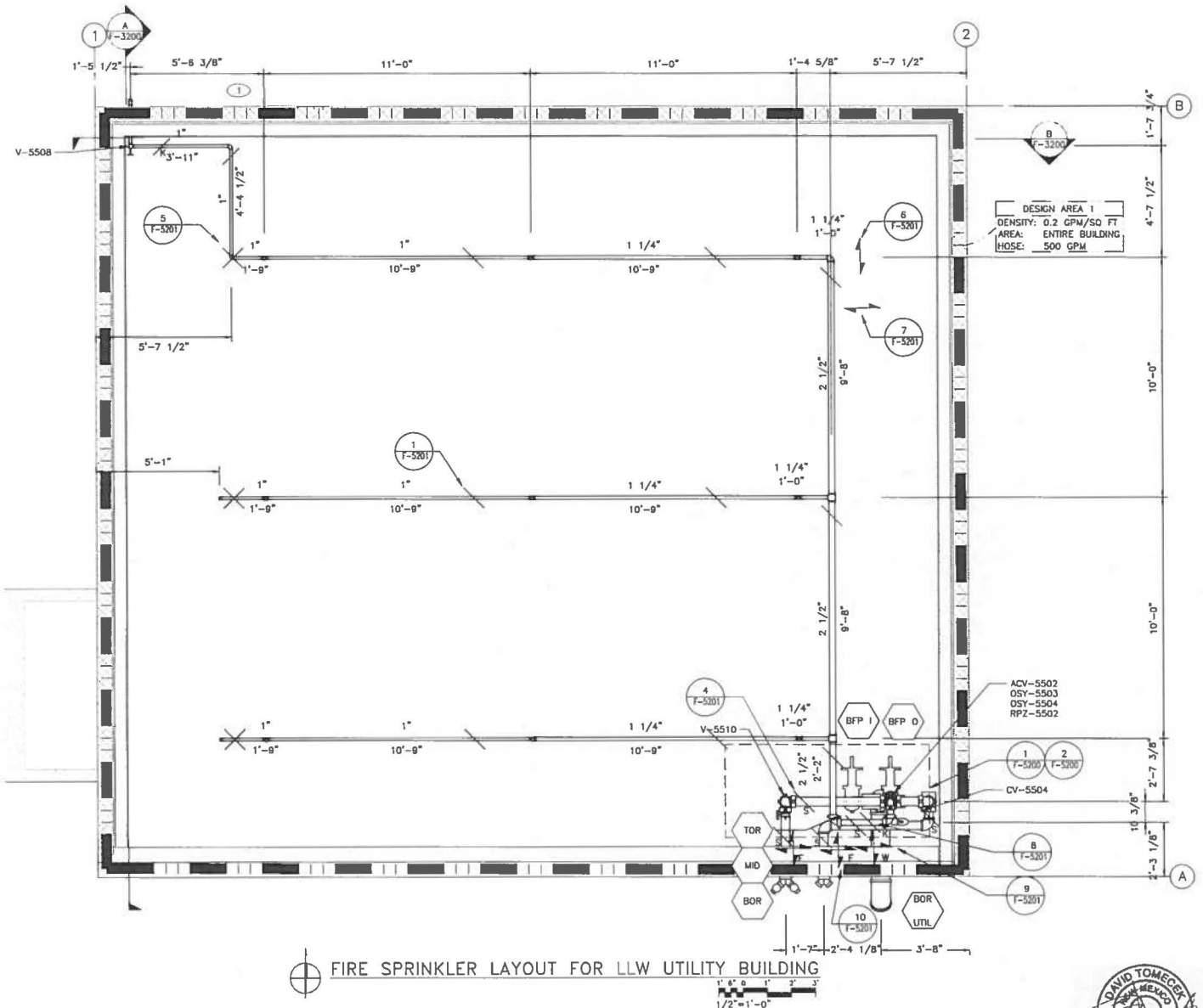

FIRE SPRINKLER LAYOUT FOR LLW UTILITY BUILDING

1/2"=1'-0"

GENERAL NOTES:

1. IF THIS SHEET IS NOT 24"x 36", THEN IT IS A REDUCED SIZE PLOT. USE GRAPHIC SCALE ACCORDINGLY.
2. FIRE PROTECTION PIPING & SPRINKLER INSTALLATION SHALL BE PER NFPA 13-2007, FOR ORDINARY HAZARD GROUP 2.

KEYED NOTES:

(1) INSTALL INSPECTOR'S TEST CONNECTION PER NFPA 13-2007 PARAGRAPH 8.17.4.2 AT END OF SYSTEM.

NO	DATE	CLASS REV	ADC	DESCRIPTION	DWN	DES	CHKD	SUB	APP

AECOM

RLWTF-UP LOW LEVEL WASTE SUBPROJECT

FIRE PROTECTION SYSTEM PLAN

BLDG. 251 TA-50

DRAWN	C AZHOC
DESIGN	M FERRARESI
CHECKED	B SWEATON
DATE	5/8/14

SUBMITTED: MANUEL TARIN

APPROVED FOR RELEASE: ED ARTIGLIA

Los Alamos NATIONAL LABORATORY PO Box 1663 Los Alamos, New Mexico 87545

SHEET F-1200

31 OF 118

CLASSIFICATION | REVIEWER | DATE

PROJECT ID 100761 | DRAWING NO C55865 | REV 0

DAVID TOMECEK NEW MEXICO 15719 LICENSED PROFESSIONAL ENGINEER

05-06-2014

12516

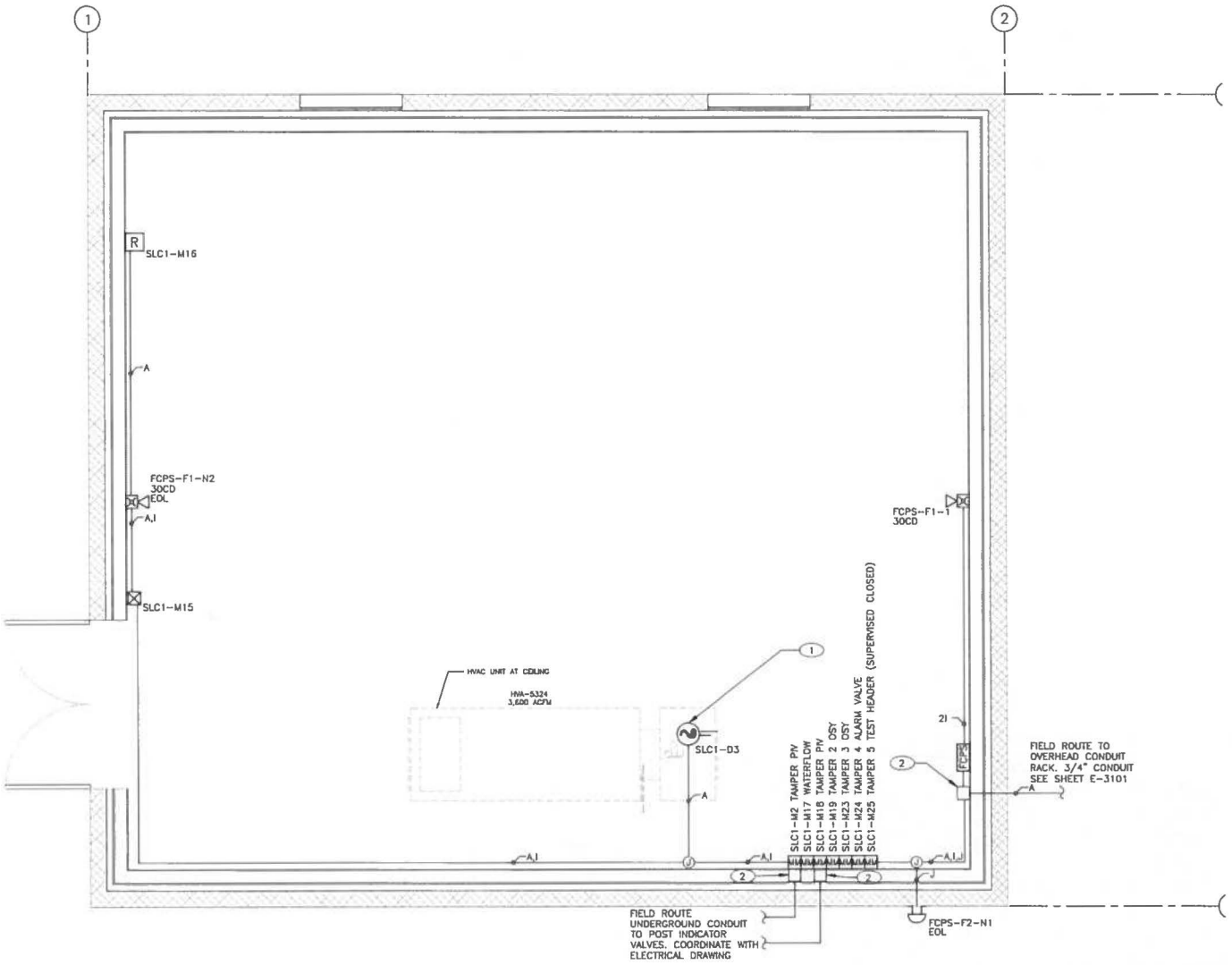

FIRE ALARM LAYOUT

1/2"=1'-0"

GENERAL NOTES

1. IF THIS SHEET IS NOT 24"x 36", THEN IT IS A REDUCED SIZE PLOT. USE GRAPHIC SCALE ACCORDINGLY.
2. CONDUIT ROUTING IS SHOWN FOR INFORMATIONAL PURPOSES ONLY.

KEYED NOTES

1. ADDRESSABLE DUCT SMOKE DETECTOR AND ADDRESSABLE OUTPUT CONTROL MODULE FOR HVAC SHUTDOWN LOCATED ABOVE CEILING
2. PROVIDE EARTH GROUND CONNECTIONS FOR SURGE SUPPRESSION DEVICES

CIRCUIT DESCRIPTION

A. SIGNALING LINE CIRCUIT 1 – 16awg FPL
B. NOTIFICATION APPLIANCE CIRCUIT 1 – 14awg TFN
C. NOTIFICATION APPLIANCE CIRCUIT 2 – 14awg TFN
D. NOTIFICATION APPLIANCE CIRCUIT 3 – 14awg TFN
E. NOT USED
F. RS-485 COMMUNICATION CIRCUIT – 24awg STP CABLE
G. 24VDC POWER CIRCUIT – 14awg TFN
H. INITIATING DEVICE CIRCUIT – 14awg TFN
I. FCPS NOTIFICATION APPLIANCE CIRCUIT 1 – 14awg TFN
J. FCPS NOTIFICATION APPLIANCE CIRCUIT 2 – 14awg TFN

DAVID TOMECEK
NEW MEXICO
10716
LICENSED PROFESSIONAL ENGINEER
05-06-2014

NO	DATE	CLASS REV	ADC	DESCRIPTION	DWN	DES	CHKD	SUB	APP

AECOM

RLWTF-UP LOW LEVEL WASTE SUBPROJECT

FIRE ALARM SYSTEM PLAN

BLDG. 251 TA-50

DRAWN	C AZNOE
DESIGN	M FERRARESI
CHECKED	B SMEATON
DATE	5/8/14

SUBMITTED: MANUEL TARIN

APPROVED FOR RELEASE: ED ARTIGLIA

Los Alamos NATIONAL LABORATORY PO Box 1663 Los Alamos, New Mexico 87545

SHEET F-1201

32 OF 118

CLASSIFICATION | REVIEWER | DATE

PROJECT ID 100761 | DRAWING NO C55865 | REV 0

: 12517

GENERAL NOTES:

1. IF THIS SHEET IS NOT 24"x 36", THEN IT IS A REDUCED SIZE PLOT. USE GRAPHIC SCALE ACCORDINGLY.
2. FIRE PROTECTION PIPING & SPRINKLER INSTALLATION SHALL BE PER NFPA 13-2007, FOR ORDINARY HAZARD GROUP 2.

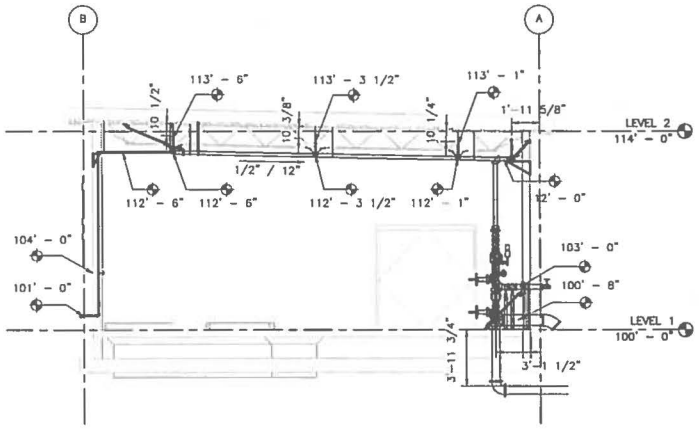

A F-1200 LLW RISER ELEVATION, FROM EAST

0' 1' 2' 4' 6' 8'
1/4"=1'-0"

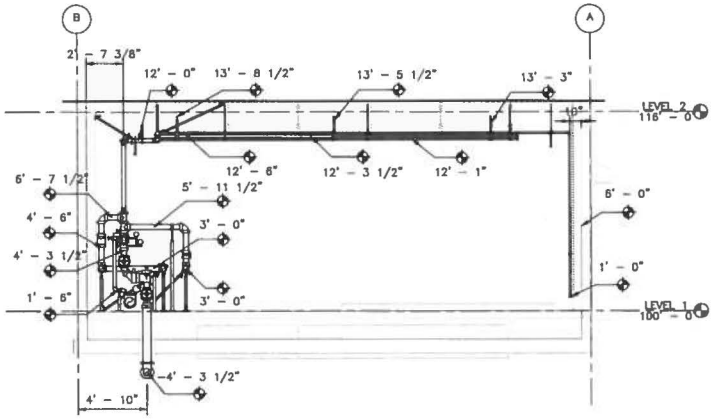

B F-1200 LLW RISER ELEVATION, FROM NORTH

0' 1' 2' 4' 6' 8'
1/4"=1'-0"

DAVID TOMECEK
NEW MEXICO
16216
LICENSED PROFESSIONAL ENGINEER
05-06-2014

NO	DATE	CLASS REV	ADC	DESCRIPTION	DWN	DES	CHKD	SUB	APP

AECOM

RLWTF-UP LOW LEVEL WASTE SUBPROJECT

FIRE PROTECTION SECTIONS

BLDG. 251 TA-50

DRAWN	C AZNOE
DESIGN	M FERRARESI
CHECKED	B SWEATON
DATE	5/6/14

SUBMITTED: MANUEL TARIN
APPROVED FOR RELEASE: ED ARTIGLIA

Los Alamos NATIONAL LABORATORY PO Box 1663 Los Alamos, New Mexico 87545

SHEET F-3200
33 OF 118

CLASSIFICATION | REVIEWER | DATE

PROJECT ID 100761 | DRAWING NO C55865 | REV 0

125518

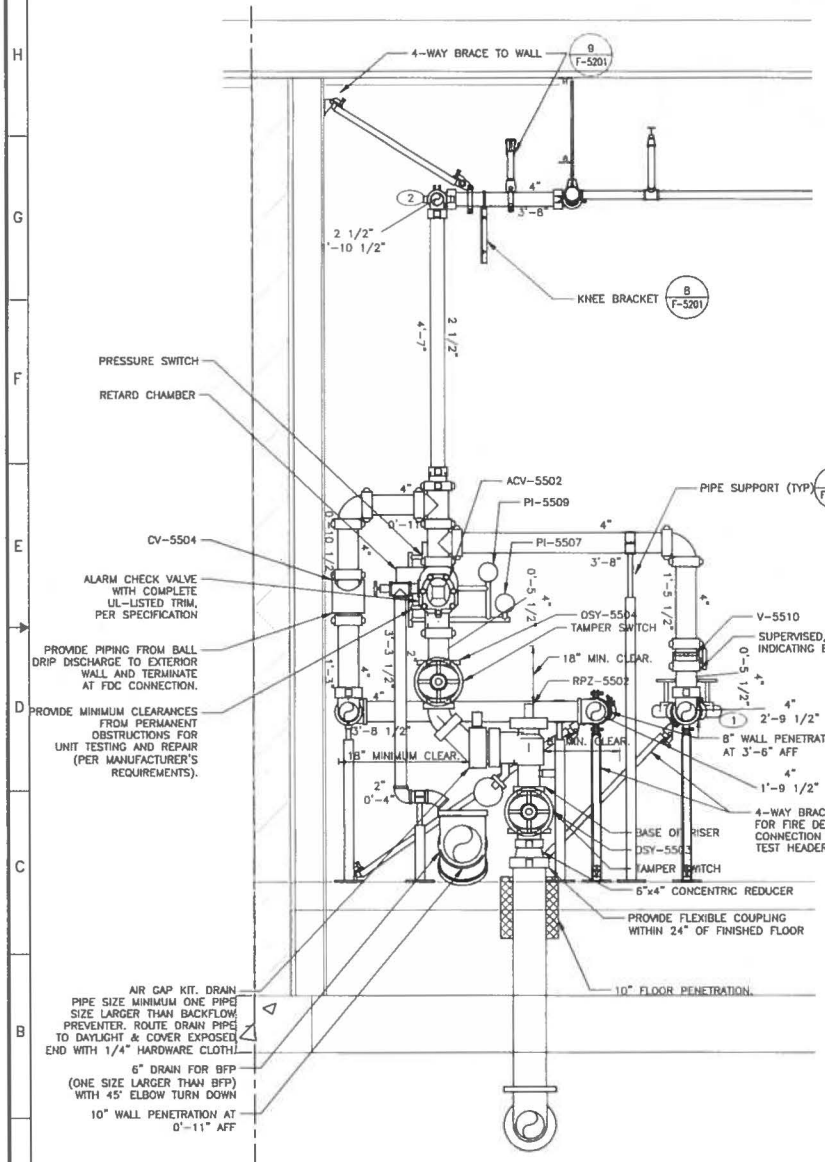

FRONT VIEW

1 F-1200 LLW UTILITY BUILDING RISER DETAIL

1"=1'-0"

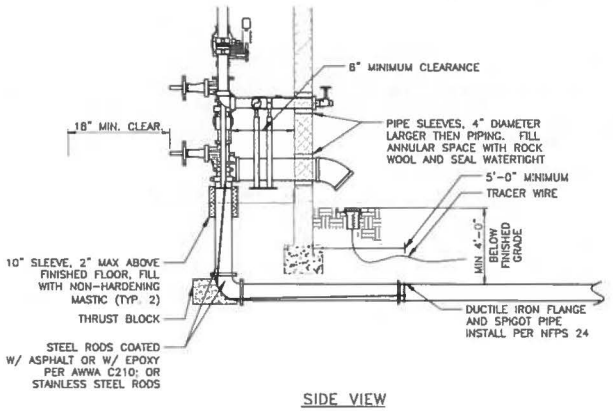

SIDE VIEW

2 F-1200 LLW UTILITY BUILDING RISER DETAIL

1/2"=1'-0"

GENERAL NOTES:

1. IF THIS SHEET IS NOT 24"x 36", THEN IT IS A REDUCED SIZE PLOT. USE GRAPHIC SCALE ACCORDINGLY.
2. FIRE PROTECTION PIPING & SPRINKLER INSTALLATION SHALL BE PER NFPA 13-2007, FOR ORDINARY HAZARD GROUP 2.

KEYED NOTES:

(1) PROVIDE TEST HEADER ON OUTSIDE WALL FOR FORWARD FLOW TESTS OF BACKFLOW PREVENTION ASSEMBLY. SEE SPECIFICATION FOR DETAILS.

(2) PROVIDE FLEXIBLE COUPLINGS AT TOP AND BOTTOM OF RISERS LONGER THAN 7'-0", AND FLEXIBLE COUPLING AT TOP OR BOTTOM OF RISER BETWEEN 3'-0" AND 7'-0"

DAVID TOMECEK NEW MEXICO 16216 REGISTERED PROFESSIONAL ENGINEER

05-06-2014

NO	DATE	CLASS REV	ADC	DESCRIPTION	DWN	DES	CHKD	SUB	APP

AECOM

RLWTF-UP LOW LEVEL WASTE SUBPROJECT

FIRE PROTECTION SYSTEM INSTALLATION DETAILS

BLDG. 251 TA-50

DRAWN	C AZNOE
DESIGN	M FERRARESI
CHECKED	B SWEATON
DATE	5/8/14

SUBMITTED MANUEL TARIN

APPROVED FOR RELEASE ED ARTIOLA

Los Alamos NATIONAL LABORATORY PO Box 1663 Los Alamos, New Mexico 87545

SHEET F-5200

34 OF 118

CLASSIFICATION | REVIEWER | DATE

PROJECT ID 100761

DRAWING NO C55865

REV 0

LA-UR-14-25519

DIMENSIONS FOR HANGERS FROM TRUSS

NOMINAL PIPE SIZE	1/2	3/4	1	1 1/4	1 1/2	2	2 1/2	3	4	5	6	8
HANGER TAKEOUT(A)	1/2	1/2	1/2	3/4	1	1 1/4	1 3/4	2	2 1/2	3	3 3/4	5 1/4
ROD DIA.(B)	3/8	3/8	3/8	3/8	3/8	3/8	3/8	3/8	3/8	1/2	1/2	1/2

ALL SIZES ARE IN INCHES

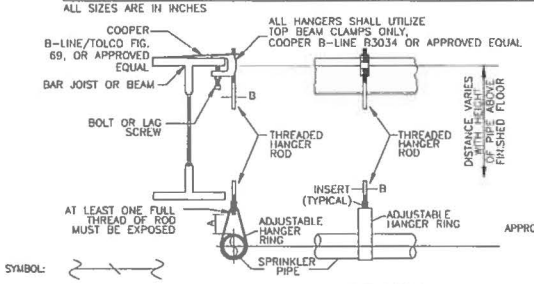

1/F-1200 1/F-5201 SPRINKLER HANGER DETAIL
SCALE: NONE

COOPER B-LINE/TOLCO FIG. 25 FOR 1"- TO 2"-DIAMETER SHALL BE USED ONLY WITH COOPER B-LINE/TOLCO BAND HANGER FIG. 200 TO RESTRAIN THE UPWARD MOVEMENT OF PIPE AS IT OCCURS DURING SPRINKLER HEAD ACTIVATION OR SEISMIC ACTIVITY

2/F-1200 2/F-5201 SPRINKLER SURGE RESTRAINER
SCALE: NONE

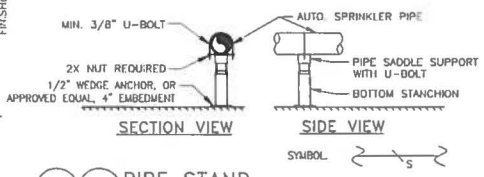

4/F-5200 4/F-9200 PIPE STAND
SCALE: NONE

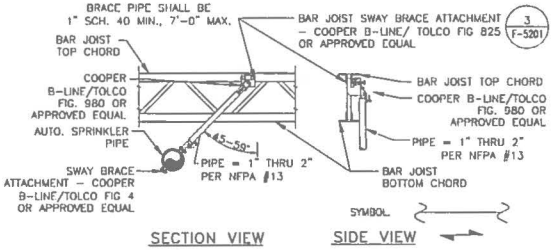

6/F-1200 BAR JOIST LONGITUDINAL SWAY BRACE
SCALE: NONE

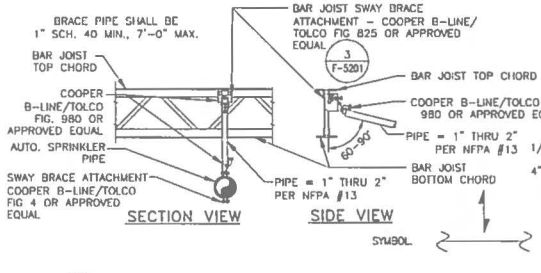

7/F-1200 BAR JOIST LATERAL SWAY BRACE
SCALE: NONE

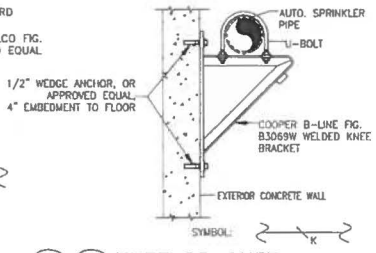

8/F-1200 8/F-5200 KNEE BRACKET
SCALE: NONE

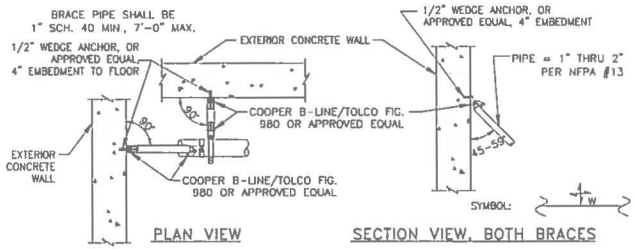

9/F-1200 9/F-5200 4-WAY SWAY BRACE TO CONCRETE WALL
SCALE: NONE

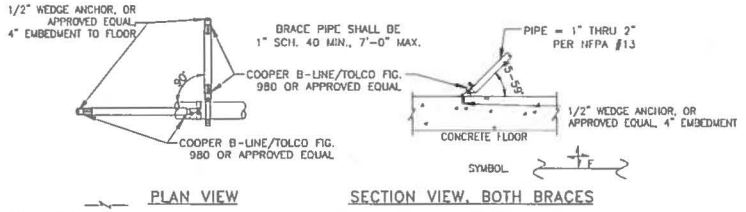

10/F-1200 10/F-5200 4-WAY SWAY BRACE TO CONCRETE FLOOR
SCALE: NONE

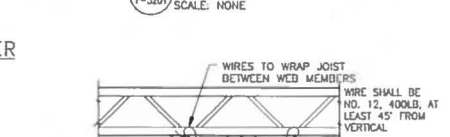

3/F-5201 BAR JOIST ATTACHMENT
SCALE: NONE

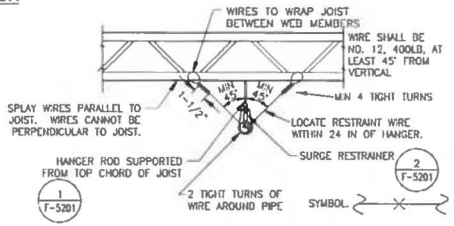

5/F-1200 END-OF-LINE RESTRAINT
SCALE: NONE

NO	DATE	CLASS REV	ADC	DESCRIPTION	DWN	DES	CHKD	SUB	APP

AECOM

RLWTF-UP LOW LEVEL WASTE SUBPROJECT

FIRE PROTECTION SYSTEM HANGER DETAILS

DRAWN	C AZNOE
DESIGN	M FERRARESI
CHECKED	B SWEATON
DATE	5/6/14

BLDG. 251 TA-50

SUBMITTED: MANUEL TARIN

APPROVED FOR RELEASE: ED ARTIGLIA

Los Alamos NATIONAL LABORATORY PO Box 1663 Los Alamos, New Mexico 87545

SHEET F-5201

35 OF 118

CLASSIFICATION | REVIEWER | DATE

PROJECT ID 100761

DRAWING NO C55865

REV 0

DAVID TOMECEK LICENSED PROFESSIONAL ENGINEER 15016 NEW MEXICO

05-06-2014

12529

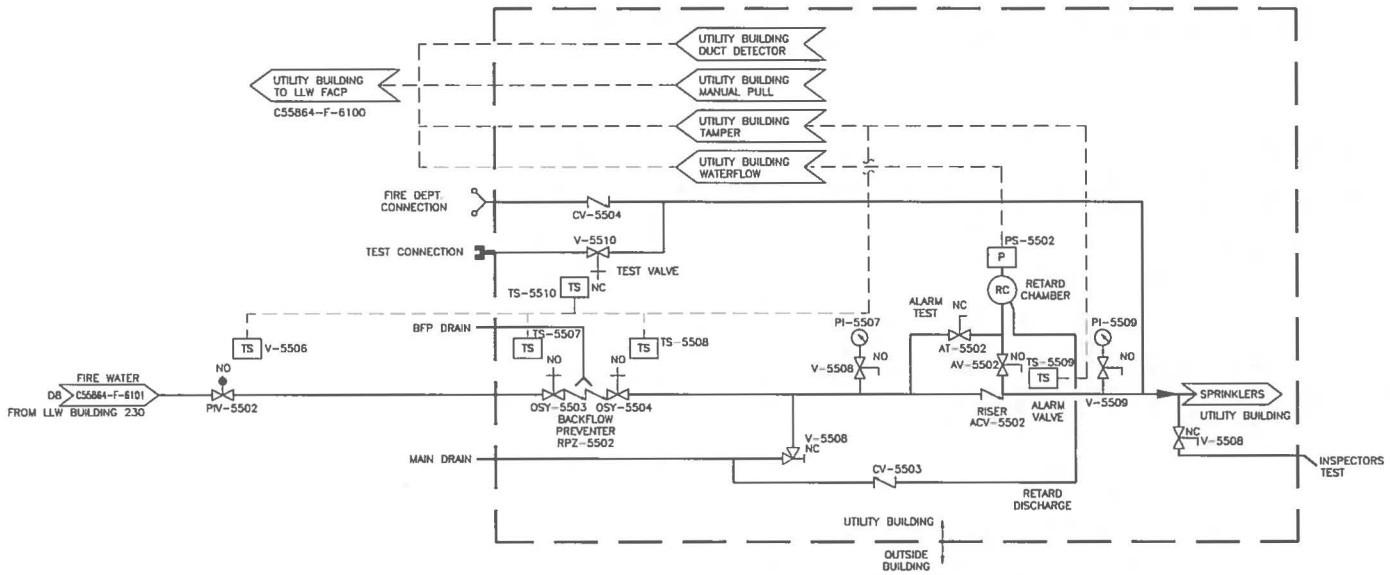

FIRE PROTECTION P&ID FOR LLW UTILITY BUILDING

SCALE: NONE

"PRIORITY DRAWING"

NO	DATE	CLASS REV	ADC	DESCRIPTION	DWN	DES	CHKD	SUB	APP

AECOM

RLWTF-UP LOW LEVEL WASTE SUBPROJECT

FIRE PROTECTION P&ID

BLDG. 251 TA-50

DRAWN	C AZNOE		
DESIGN	M FERRARESI		
CHECKED	B SWEATON		
DATE	5/8/14		

SUBMITTED MANUEL TARIN

APPROVED FOR RELEASE ED ARTIGLIA

Los Alamos NATIONAL LABORATORY PO Box 1663 Los Alamos, New Mexico 87545

SHEET F-6200

36 OF 118

CLASSIFICATION REVIEWER DATE

PROJECT ID 100761

DRAWING NO C55865

REV 0

DAVID TOMECEK NEW MEXICO 14216 LICENSED PROFESSIONAL ENGINEER

05-06-2014

: 125521

SPRINKLER SCHEDULE

TYPE	TEMPERATURE	K-FACTOR	RESPONSE	COVERAGE	COUNT
EXPOSED SSU	ORDINARY (EST. 155°F)	5.6 GPM/PSI$^{1/2}$	STANDARD	STANDARD	9

HANGER SCHEDULE

MAXIMUM DISTANCE BETWEEN HANGERS											
NOMINAL PIPE SIZE (in.)	1"	1-1/4"	1-1/2"	2"	2-1/2"	3"	3-1/2"	4"	5"	6"	8"
STEEL PIPE SCHEDULE 10 THREADED	12'-0"	12'-0"	12'-0"	12'-0"	12'-0"	12'-0"	N/A	N/A	N/A	N/A	N/A
STEEL PIPE SCHEDULE 10 GROOVED	12'-0"	12'-0"	15'-0"	15'-0"	15'-0"	15'-0"	15'-0"	15'-0"	15'-0"	15'-0"	15'-0"
STEEL PIPE SCHEDULE 40	12'-0"	12'-0"	15'-0"	15'-0"	15'-0"	15'-0"	15'-0"	15'-0"	15'-0"	15'-0"	15'-0"

DAVID TOMECEK NEW MEXICO 14147 LICENSED PROFESSIONAL ENGINEER

05-06-2014

NO	DATE	CLASS REV	ADC	DESCRIPTION	DWN	DES	CHKD	SUB	APP

AECOM

RLWTF-UP LOW LEVEL WASTE SUBPROJECT

FIRE PROTECTION SCHEDULES

DRAWN	M FERRARESI		
DESIGN	M FERRARESI		
CHECKED	B SMEATON		
DATE	5/6/14		

BLDG. 251 TA-50

SUBMITTED MANUEL TARIN

APPROVED FOR RELEASE ED ARTIGLIA

Los Alamos NATIONAL LABORATORY PO Box 1663 Los Alamos, New Mexico 87545

SHEET F-7200

37 OF 118

CLASSIFICATION REVIEWER DATE

PROJECT ID 100761

DRAWING NO C55865

REV 0

12522

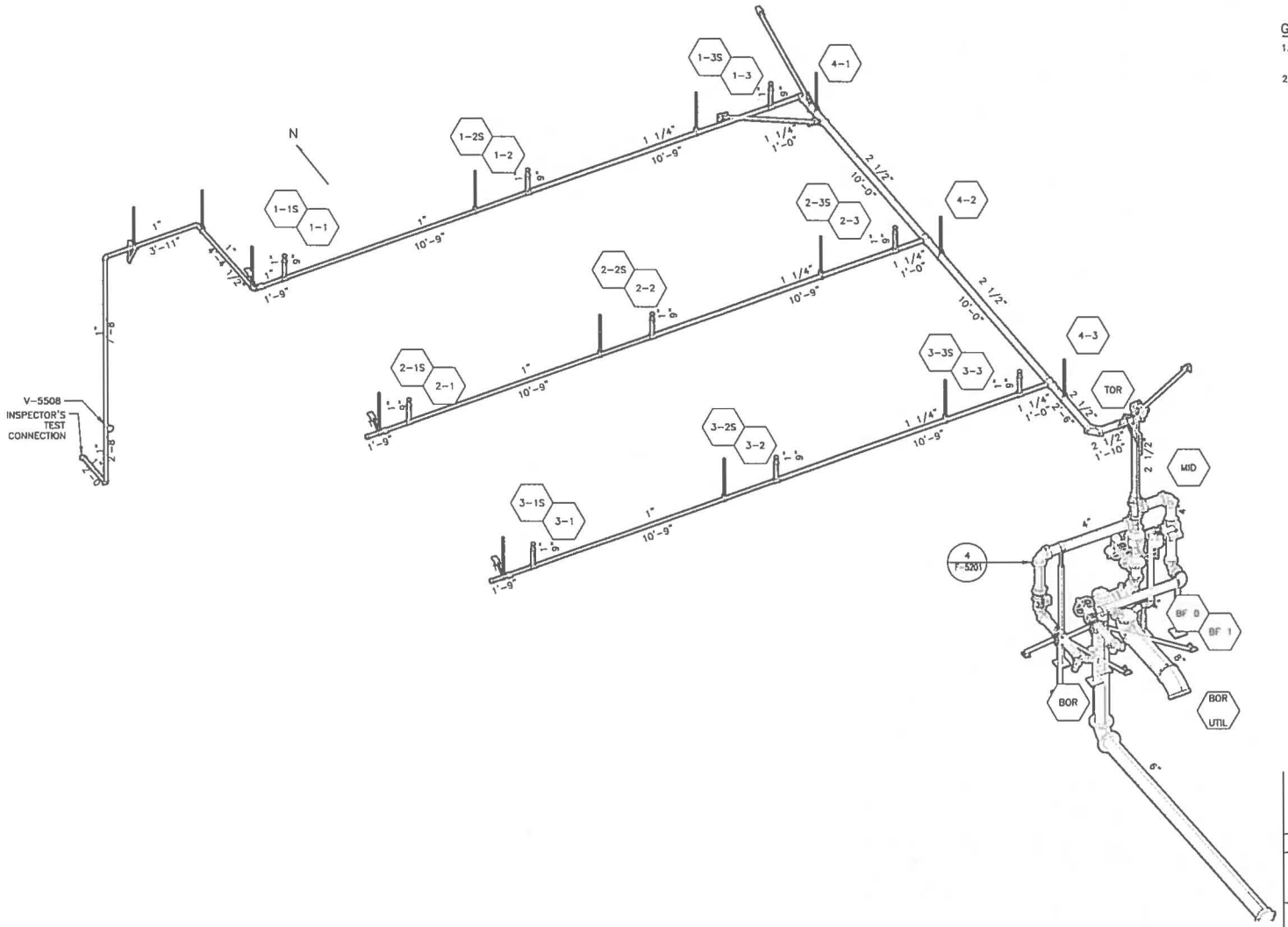

GENERAL NOTES:

1. FIRE PROTECTION PIPING & SPRINKLER INSTALLATION SHALL BE PER NFPA 13-2007, FOR ORDINARY HAZARD GROUP 2.
2. UPRIGHT SPRINKLERS SHALL BE WITHIN 12" OF BOTTOM OF DECK.

LLW UTILITY BUILDING FIRE PROTECTION SYSTEM ISO

SCALE: NONE

DAVID TOMECEK NEW MEXICO 10246 LICENSED PROFESSIONAL ENGINEER

05-06-2014

NO	DATE	CLASS REV	ADC	DESCRIPTION	DWN	DES	CHKD	SUB	APP

AECOM

RLWTF-UP LOW LEVEL WASTE SUBPROJECT

FIRE PROTECTION ISO

BLDG. 251 TA-50

DRAWN	C AZNOE
DESIGN	M FERRARESI
CHECKED	B SMEATON
DATE	5/8/14

SUBMITTED: MANUEL TARIN

APPROVED FOR RELEASE: ED ARTIGLIA

Los Alamos NATIONAL LABORATORY PO Box 1663 Los Alamos, New Mexico 87545

SHEET F-9200

38 OF 118

CLASSIFICATION | REVIEWER | DATE

PROJECT ID 100761 | DRAWING NO C55865 | REV 0

: 12523

PLUMBING SYMBOLS LEGEND

(ALL ABBREVIATIONS SHOWN ARE NOT NECESSARILY USED ON THE DRAWINGS)

(ALL SYMBOLS SHOWN ARE NOT NECESSARILY USED ON THE DRAWINGS)

ABBREVIATIONS

AC	AIR CONDITIONING
AD	ACCESS DOOR
AFF	ABOVE FINISHED FLOOR
AFG	ABOVE FINISHED GRADE
AHU	AIR HANDLING UNIT
AL	ACOUSTIC LINING
AOV	AIR OPERATED VALVE
AOBV	AIR OPERATED BALL VALVE
AR	ARGON
BDD	BACK DRAFT DAMPER
BHP	HORSEPOWER
BMCS	BUILDING MANAGEMENT CONTROL SYSTEM
BOD	BOTTOM OF DUCT
BOP	BOTTOM OF PIPE BRAKE
BP	BUILDING PRESSURE
BTUH	BTU PER HOUR
CAM	CONTINUOUS AIR MONITOR
CFH	CUBIC FEET PER HOUR
CFM	CUBIC FEET PER MINUTE
CIE	CONTRACTOR INSTALLED EQUIPMENT
CO	CLEANOUT
CONT	CONTINUATION
CPVC	CHLORINATED POLYVINYL CHLORIDE
D	DRAIN
DCO	DOUBLE CLEANOUT
DECON	DECONTAMINATION
DEMO	DEMOLITION, DEMOLISH
DX	DIRECT EXPANSION
EP	ELECTRIC-PNEUMATIC
ENT	ENTERING
EXH	EXHAUST
°F	DEGREES FAHRENHEIT
FAS	FIXED HEAD AIR SAMPLER
FC	FLEXIBLE CONNECTOR, FAIL CLOSED
FD	FLOOR DRAIN
FDMPR	FIRE DAMPER
F.G.	FILTER GAUGE
FLEX	FLEXIBLE
FM	FACTORY MUTUAL
FMS	FACILITY MANAGEMENT SYSTEM
FO	FAIL OPEN
FPM	FEET PER MINUTE
FS	FLOOR SINK
FT.	FEET
FT	FLAT TOP
FV	FLOW VENTURI
GFE	GOVERNMENT FURNISHED EQUIPMENT
GIE	GOVERNMENT INSTALLED EQUIPMENT
GPH	GALLONS PER HOUR
GPM	GALLONS PER MINUTE
HD	HEAD, HUB DRAIN
HEPA	HIGH EFFICIENCY PARTICULATE AIR
HFM	HAND AND FOOT MONITOR
HGT	HEIGHT
HOA	HAND-OFF-AUTOMATIC
HORIZ	HORIZONTAL
HP	HORSEPOWER
HSTAT	HUMIDISTAT
HTG	HEATING
HTR	HEATER
HVAC	HEATING, VENTILATING AND AIR CONDITIONING
HW	HOT WATER
HX	HEPA EXHAUST AIR
HYD	HYDRANT
HZ	HERTZ
IE	INVERT ELEVATION
IN	INCHES
IRI	INDUSTRIAL RISK INSURERS
KW	KILOWATT
KWH	KILOWATT HOUR
LLW	LOW LEVEL WASTE
LO	LOCK OPEN
LX	LABORATORY EXHAUST AIR
MA	MIXED AIR
MOBV	MOTOR OPERATED BALL VALVE
NA	NOT APPLICABLE
NC	NORMALLY CLOSED
NIC	NOT IN CONTRACT
NO	NORMALLY OPEN
OA	OUTSIDE AIR
OBD	OPPOSED BLADE DAMPER
OHM	OCCUPATIONAL HEALTH MONITORING
PCM	PROGRAMMABLE CONTROL MODULE; PERSONNEL CONTAMINATION MONITORING
PIP	PIPE IN PIPE
PL	PLACES
PLC	PROGRAMMABLE LOGIC CONTROLLER
POC	POINT OF CONNECTION TO EXISTING
POR	POINT OF REMOVAL FROM EXISTING
PRV	PRESSURE REDUCING VALVE
PRV	PRESSURE RELIEF VALVE
PSIG	POUNDS PER SQUARE INCH GAGE
PVC	POLYVINYL CHLORIDE
QTY	QUANTITY
RA	RETURN AIR
RD	ROOF DRAIN
RDOF	ROOF DRAIN OVERFLOW
RLA	RELIEF AIR
RO	REVERSE OSMOSIS
RPM	REVOLUTIONS PER MINUTE
SA	SUPPLY AIR
SHRV	SHOWER VALVE
SIM	SIMILAR
SMFC	STRUCTURAL METAL FRAMING CHANNEL
SOV	SOLENOID OPERATED VALVE
SP	STATIC PRESSURE (INCHES OF WATER)
SST	STAINLESS STEEL TUBING
TOC	TOP OF CONCRETE
TP	TRAP PRIMER
TX	TOILET EXHAUST
TYP	TYPICAL
UL	UNDERWRITERS LABORATORIES
V	VALVE
VAC	VOLTS, ALTERNATING CURRENT
VAV	VALVE, CHECK
VC	VARIABLE AIR VOLUME
VD	VOLUME DAMPER
VEL	VELOCITY
VTR	VENT THRU ROOF
VX	VACUUM EXHAUST
WC	WATER COLUMN
WCO	WALL CLEAN OUT
WHA	WATER HAMMER ARRESTOR

EQUIPMENT CODE LISTING

AFTERCOOLER

ACL	AFTER COOLER

AIR DRYER

DAD	
DAR	REFRIGERANT AIR DRYER

AIR WASHER

WA	AIR WASHER

BACKFLOW PREVENTER

BFP	BACKFLOW PREVENTER

EQUIPMENT CODE LISTING (CONT.)

BOILERS

BHW	HOT WATER BOILER (HEATING)
BS	STEAM BOILER (HEATING)
BWS	HOT WATER SUPPLY BOILER (POTABLE/NOT-POTABLE)

CHILLERS

CWA	ABSORPTION WATER CHILLER
CWR	REFRIGERANT WATER CHILLER

COMPRESSORS

CA	AIR COMPRESSOR
CR	REFRIGERANT COMPRESSOR

DEHUMIDIFIER

DHM	DEHUMIDIFIER

FANS

FE	EXHAUST AIR FAN
FRA	RETURN AIR FAN
FS	SUPPLY AIR FAN

FILTERS (AIR)

FAB	REPLACEMENT AIR FILTER (6" DEEP AND LARGER)
FAC	CLEANABLE AIR FILTER (PERMANENT TYPE)
FAH	HEPA FILTER
FAL	CARBON/CHARCOAL AIR FILTER
FAP	EVAPORATIVE COOLER PAD
FAR	REPLACEMENT AIR FILTER (UP TO 4" DEEP)
FES	ELECTROSTATIC AIR FILTER

HEATERS (UNIT/SPACE WITH FANS)

HUG	GAS HEATER
HUE	ELECTRIC HEATER
HUN	RADIANT (INFRARED) HEATER
HUS	STEAM HEATER
HUW	HOT WATER HEATER

HEAT EXCHANGERS

HXG	HEAT EXCHANGER, WATER/GLYCOL TO AIR
HXO	HEAT EXCHANGER, OIL TO WATER
HXS	HEAT EXCHANGER, STEAM TO WATER
HXW	HEAT EXCHANGER, WATER TO WATER

HUMIDIFIERS

HAS	AIR HUMIDIFIER, STEAM SPRAY
HAW	AIR HUMIDIFIER, WATER SPRAY

HVAC UNITS

ACR	REFRIGERANT AIR CONDITIONING UNIT (DX COOLING ONLY)
CAE	EVAPORATIVE AIR COOLER
CAW	CHILLED WATER AIR CONDITIONING UNIT (COOLING ONLY)
HV	HEATING AND VENTILATING UNIT
HVA	HEATING, VENTILATING, AND AIR CONDITIONING UNIT

PUMPS

PA	ACID PUMP (CAUSTIC, CHEMICAL, ETC.)
PBF	BOILER FEED PUMP
PC	CONDENSATE PUMP (ALL TYPES)
PCT	COOLING TOWER PUMP
PCW	CHILLED WATER PUMP
PDH	HOT WATER PUMP (POTABLE)
PDW	DEIONIZED WATER PUMP
PHW	HOT WATER HEATING PUMP
PF	FIRE PUMP
PPB	PRESSURE BOOSTER PUMP
PS	SUMP PUMP (REGARDLESS OF USE)
PSR	RAW SEWAGE PUMP
PV	VACUUM PUMP
PWS	WATER SPRAY PUMP
PWT	WASTE TREATMENT PUMP

TANKS

TAC	TANK ACID OR CHEMICAL
TCA	COMPRESSED AIR TANK
THW	HOT WATER STORAGE TANK
TK	TANK
TO	FUEL OIL TANK
TX	EXPANSION TANK

WATER HEATERS

HWE	ELECTRIC WATER HEATER
HWG	GAS WATER HEATER

WATER PRESSURE REGULATORS

RPW	WATER PRESSURE REGULATOR

MATERIAL/CLASSIFICATION

CS – CARBON STEEL
CU – COPPER
CSS150 – STAINLESS STEEL 150#
SS300 – STAINLESS STEEL 300#
HDPE – HIGH DENSITY POLYETHYLENE

PIPING SYMBOLS

SYMBOL	DESCRIPTION
DRAINS	
RD	ROOF DRAIN
D	DRAIN
RDOF	ROOF DRAIN OVERFLOW
FD	FIRE WATER DRAIN
AIR/GAS	
CA	COMPRESSED AIR
NG	NATURAL GAS
NGL	NATURAL GAS LOW PRESSURE
N2	NITROGEN
SG	SPECIALTY GAS
AR	ARGON GAS
P-10	P-10 GAS
VAC	VACUUM
STEAM/CONDENSATE	
CONHP	CONDENSATE-HIGH PRESSURE (ABOVE 15 PSIG)
CONLP	CONDENSATE-LOW PRESSURE (15 PSIG OR LESS)
CONPMP	CONDENSATE-PUMPED
STMHP	STEAM-HIGH PRESSURE (ABOVE 15 PSIG)
STMLP	STEAM-LOW PRESSURE (15 PSIG OR LESS)
WASTE/VENT	
SW	SANITARY WASTE
SWV	SANITARY WASTE VENT
SWTE	SANITARY WASTEWATER TREATED EFFLUENT
VTR	VENT THROUGH ROOF
WATER	
DIWR	DEIONIZED WATER RETURN
DIWS	DEIONIZED WATER SUPPLY
DIWD	DEIONIZED WATER DRAIN
NPWC	NON-POTABLE WATER-COLD
NPWH	NON-POTABLE WATER-HOT
NPWMU	NON-POTABLE WATER-MAKEUP
PWC	POTABLE WATER-COLD
PWHS	POTABLE WATER-HOT SUPPLY
PWHR	POTABLE WATER-HOT RECIRCULATION
RO	REVERSE OSMOSIS WATER

GENERAL NOTES

1. COORDINATE ALL PLUMBING, PIPING AND EQUIPMENT WITH STRUCTURAL, MECHANICAL, FIRE PROTECTION, AND ELECTRICAL SYSTEMS AND PROVIDE NECESSARY OFFSETS TO AVOID CONFLICTS AND TO MAINTAIN EQUIPMENT ACCESS AND SERVICEABILITY.
2. FURNISH ALL NECESSARY STRUCTURES, INSERTS, SLEEVES AND HANGING DEVICES FOR INSTALLATION OF PLUMBING EQUIPMENT AND PIPING, ETC.
3. PROVIDE ALL NECESSARY MISCELLANEOUS ANGLES, CHANNELS, UNISTRUT AND SUPPORT AS REQUIRED TO ADEQUATELY SUPPORT THE PLUMBING PIPING, AND EQUIPMENT IN A MANNER APPROVED BY THE CONTRACT ADMINISTRATOR AND DOES NOT OVERLOAD THE BUILDING STRUCTURAL SYSTEM.
4. PROVIDE 2 FT. X 4 FT. CLEARANCE BELOW ALL HORIZONTALLY SUSPENDED PLUMBING ITEMS REQUIRING MAINTENANCE.
5. ALL DISCIPLINES (ELECTRICAL, FIRE PROTECTION, PIPING, PLUMBING, SHEET METAL) WILL COORDINATE INSTALLATION OF THEIR DISCIPLINE SO AS NOT TO INHIBIT ACCESS TO EQUIPMENT REQUIRING MAINTENANCE.
6. ALL STRUCTURAL WELDED CONNECTIONS SHALL BE PERFORMED IN ACCORDANCE WITH LANL APPROVED WELDING SPECIFICATION OR AWS D1.1/D1.1M SPECIFICATION FOR WELDING STEEL. ALL TUBULAR CONNECTIONS SHALL BE INSPECTED PER AWS D1.1 TABLE 6.1. ALL NON-TUBULAR COMPONENTS SHALL BE INSPECTED AS CYCLICALLY LOADED NON-TUBULAR CONNECTIONS PER AWS D1.1 TABLE 6.1. ALL PIPE WELDED CONNECTIONS SHALL BE PERFORMED IN ACCORDANCE WITH LANL APPROVED WELDING SPECIFICATION OR THE APPLICABLE ASME PRESSURE PIPING CODE IDENTIFIED IN THE CONSTRUCTION SPECIFICATION.
7. DETAILS WITH MISSING WELD INFORMATION (FOR EXAMPLE, SIZE OR NUMBER OF PLACES) SHALL BE PROVIDED ON FABRICATION DRAWINGS FOR APPROVAL PRIOR TO FABRICATION.

EQUIPMENT SYMBOLS

- DIAMOND SYMBOL INDICATES EQUIPMENT/FIXTURE
- P-3 — NUMBER REFERS TO SPECIFIC EQUIPMENT IDENTIFIED IN PLUMBING SCHEDULE
- 1 — ELLIPSE SYMBOL INDICATES A KEYED NOTE THE NUMBER REFERS TO A SPECIFIC NOTE LISTED IN THE KEYED NOTE LIST
- 1 — CIRCLE SYMBOL INDICATES UL LISTED FIRESTOP MATERIALS THE NUMBER REFERS TO A SPECIFIC NOTE LISTED IN EACH FIRESTOPPING DETAIL
- POC — POINT OF CONNECTION BETWEEN CURRENT WORK AND EXISTING
- POR — POINT OF REMOVAL BETWEEN CURRENT WORK AND EXISTING
- EXISTING EQUIPMENT TO BE REMOVED
- EXISTING EQUIPMENT TO REMAIN
- UNDERFLOOR/UNDERGROUND PIPING

NO	DATE	CLASS REV	ADC	DESCRIPTION	DWN	DES	CHKD	EUS	APP

AECOM

RLWTF-UP LOW LEVEL WASTE SUBPROJECT

SYMBOL LEGEND, ABBREVIATIONS AND GENERAL NOTES

BLDG. 251 TA-50

DRAWN	V DAWSON
DESIGN	B SHRIEVE
CHECKED	C MOYERS
DATE	5/8/14

SUBMITTED MANNY TARIN

APPROVED FOR RELEASE ED ARTIOLA

Los Alamos NATIONAL LABORATORY PO Box 1663 Los Alamos, New Mexico 87545

SHEET P-0201

39 OF 118

CLASSIFICATION REVIEWER DATE

PROJECT ID 100761

DRAWING NO C55865

REV 0

CHARLES MOYERS NEW MEXICO 19838 REGISTERED PROFESSIONAL ENGINEER

05-08-14

File Location: P:\RLWTF LOW-LEVEL WASTE FACILITY\300 CAD\C55865 CUR\SHEETS\13 PLUMBING\55865-P-0201-RO.DWG
Plot Date: Friday, May 02, 2014
Plotted By: DAWSON, VANESSA

in2521

PROCESS FLOW DIAGRAMS AND P&ID SYMBOLS (GENERAL INSTRUMENT OR FUNCTION SYMBOLS)

(ALL SYMBOLS SHOWN ARE NOT NECESSARILY USED ON THE DRAWINGS)

SYMBOL	DESCRIPTION
	VALVE
	ANGLE VALVE
	BUTTERFLY VALVE
	BALL VALVE
	3-WAY VALVE
	4-WAY VALVE
	GATE VALVE (OS & Y VALVE)
	DIAPHRAGM VALVE
	PRESSURE RELIEF
	DIAPHRAGM ACTUATOR
	TWO-WAY VALVE, FAIL CLOSED
	TWO-WAY VALVE, FAIL OPEN
	3-WAY VALVE W/DIAPHRAGM ACTUATOR
	4-WAY VALVE W/DIAPHRAGM ACTUATOR
	SPRING-OPPOSED SINGLE-ACTING ACTUATOR
	SPRING-OPPOSED DOUBLE-ACTING ACTUATOR
E/H	ELECTROHYDRAULIC ACTUATOR
	HAND ACTUATOR OR HANDWHEEL
	RESTRICTION ORIFICE IN PROCESS LINE
	RESTRICTION ORIFICE DRILLED IN VALVE OR CIRCUIT SETTER
	FLOW STRAIGHTENING VANE
	DIAPHRAGM PRESSURE-BALANCED
	PRESSURE-REDUCING REGULATOR, SELF-CONTAINED, WITH HANDWHEEL ADJUSTABLE SET POINT
	PRESSURE REDUCING REGULATOR WITH EXTERNAL PRESSURE TAP
	DIFFERENTIAL-PRESSURE-REDUCING REGULATOR WITH INTERNAL AND EXTERNAL TAPS
	BACKPRESSURE REGULATOR, SELF-CONTAINED
	BACKPRESSURE REGULATOR WITH EXTERNAL PRESSURE TAP
PI	PRESSURE-REDUCING REGULATOR WITH INTEGRAL OUTLET PRESSURE RELIEF VALVE, AND OPTIONAL PRESSURE INDICATOR
PI	PRESSURE INDICATOR
	FLOW DIRECTION
	PRESSURE RELIEF OR SAFETY VALVE
	VACUUM RELIEF VALVE
	PRESSURE RELIEF OR SAFETY VALVE, STRAIGHT-THROUGH PATTERN, SPRING- OR WEIGHT-LOADED, OR WITH INTEGRAL PILOT
	RUPTURE DISK OR SAFETY HEAD FOR VACUUM RELIEF

SYMBOL	DESCRIPTION
	RUPTURE DISK OR SAFETY HEAD FOR PRESSURE RELIEF
	PILOT LIGHT X=COLOR R=RED G=GREEN
	FLEX CONNECTION (RUBBER)
	FLEX CONNECTION (STEEL BRAIDED)
	SINGLE PITOT TUBE OR PITOT VENTURI TUBE
	FLOW METER
	FLOW NOZZLE OR VENTURI
	REDUCER
	SCREWED CAP
	PIPE CAP
	HOSE CONNECTION
	FLANGED CONNECTION (PIPING OR EQUIP)
	FLOW ORIFICE FIXED
	STRAINER WITH VALVE
	Y-STRAINER
	COMPRESSED AIR
	DUCTED AIR FLOW FROM SPACE
	CAPPED AIR DUCT
	SEISMIC SHUT OFF VALVE
	GATE VALVE (OPEN)
	GATE VALVE (CLOSED)
	GLOBE VALVE (OPEN)
	GLOBE VALVE (CLOSED)
	NEEDLE VALVE (OPEN)
	NEEDLE VALVE (CLOSED)
	PLUG VALVE (OPEN)
	PLUG VALVE (CLOSED)
	SEISMIC VALVE
	BALL VALVE (OPEN)
	BALL VALVE (CLOSED)
	BALANCING VALVE
	CHECK VALVE
	SPRING CHECK VALVE
	ANGLE VALVE (OPEN)
	ANGLE VALVE (CLOSED)
	SAFETY OR RELIEF VALVE (INLET PORT SHOWN CLOSED)
	THREE-WAY VALVE (CLOSED PORT DARKENED)
	FOUR-WAY VALVE (ARROWS INDICATE FLOW DIRECTION)
	BALL-CHECK VALVE
	DUAL PURGE VALVE
	ALARM VALVE
	AIR INTAKE FILTER
	ALARM

SYMBOL	DESCRIPTION
	IN-LINE FILTER
	DOUBLE BASKET STRAINER
	HOSE REEL
	OPEN DRAIN OR FUNNEL (SHOWN)
XX	XX-- DRAIN SYSTEM ANNOTATIONS
	DRAIN (PLAN VIEW)
	CLEANOUT (PLAN VIEW)
	SANITARY VENT
	SILENCER/MUFFLER
	SPACE PENETRATIONS
	FIXED LOUVERS
XX	TRAP XX ANNOTATES FUNCTION
L	LUBRICATOR
	55 GALLON DRUM
	THERMOSTATIC VENT
	SPRINKLER ALARM (WATER MOTOR GONG)
	FLOW ALARM VALVE
	COOLING TOWER
	CHILLER
	HORIZONTAL CENTRIFUGAL PUMP
	CENTRIFUGAL FAN WITH VARIABLE INLET VANES
	BLOWER/CENTRIFUGAL FAN
	ROTARY PUMP
	VERTICAL WET PIT PUMP
	PROGRESSIVE CAVITY PUMP
	SUMP PUMP
	HEATER
	HEAT EXCHANGER
	BUBBLE GAUGE
	TEMPERATURE CONTROL VALVE
	OVER PRESSURE/UNDER PRESSURE SHUT-OFF VALVE

SYMBOL	DESCRIPTION
	AXIAL FAN
	AXIAL FAN WITH VARIABLE INLET VANES
	2-STAGE RECIPROCATING AIR COMPRESSOR
	SINGLE STAGE RECIPROCATING AIR COMPRESSOR
	2-STAGE ROTARY SCREW AIR COMPRESSOR
	RECIPROCATING PUMP
	PRESSURE VESSELS, VERTICAL (SHOWN) OR HORIZONTAL (TANKS, RECEIVERS, SEPARATORS, SUMPS ETC.)
	TANK
	HVAC COIL (A) E ELECTRIC HW HEATING WATER DX DIRECT EXPANSION NG INDIRECT GAS FIRED CH CHILLED WATER STM STEAM GL GLYCOL (B) HCL HEATING COIL CCL COOLING COIL HRC HEAT RECOVERY COIL
	UNIT HEATER (A) HW HEATING WATER DX DIRECT EXPANSION STM STEAM (B) HCL HEATING COIL
	PRESSURIZED GAS BOTTLE
	DOUBLE CONTAINMENT TANK
H	HUMIDIFIER
	MANUAL BALANCE DAMPER
	MULTI POINT PITOT TUBE ARRAY
NO/NC	DAMPER (NORMALLY OPEN) OR NORMALLY CLOSED
	EVAPORATIVE AIR COOLER
	OPPOSED BLADE DAMPER FOR HVAC EQUIPMENT
	BACKDRAFT DAMPER
	AXIAL FAN
TDV	TRIPLE DUTY VALVE

SYMBOL	DESCRIPTION
	SINGLE DUCT VARIABLE VOLUME BOX
A B	WING TYPE FACE AND BYPASS DAMPER (A) HW HEATING WATER DX DIRECT EXPANSION CH CHILLED WATER STM STEAM GL GLYCOL (B) HCL HEATING COIL CCL COOLING COIL HRC HEAT RECOVERY COIL
	COLLECTION BIN
	CYCLONE SEPARATOR
	FLUID RECOVERY PUMP
	DUAL SERVICE HEAT EXCHANGER
	MULTI BLADE DAMPER
	SINGLE BLADE DAMPER
M	MOTOR
	TEST PORT
	PILOT LIGHT
	SEPARATOR
	MIST ELIMINATOR
HEPA	HEPA FILTER
	CARBON ABSORBER FILTER
	ATMOSPHERIC FILTER
	PIPE IN PIPE (PIP)
X"	PIPE INSULATION THICKNESS

SYMBOL	DESCRIPTION
SD	SUCTION DIFFUSER
	PNEUMATIC-ELECTRIC TRANSDUCER
FT	FLOW TRANSMITTER
	BACK FLOW PREVENTER W/PRESSURE REDUCTION
	FIRESCREEN
	PREFILTER
	AIR COMPRESSOR W/TANK
	VACUUM PUMP
XXXX	ROOM NUMBER

LINE LABELING LEGEND

HWS-XXX-XX-1"

- LINE SIZE
- MATERIAL CLASSIFICATION
- LINE NUMBER
- LINE TYPE (SEE M-0001)

MATERIAL/CLASSIFICATION

CS = CARBON STEEL
CU = COPPER
SS = STAINLESS STEEL

NOTE: -▷◁- = NORMALLY OPEN (OPEN CENTER)
-▶◀- = NORMALLY CLOSED (SOLID CENTER)

NO	DATE	CLASS REV	ADC	DESCRIPTION	DWN	DES	CHKD	SUB	APP

AECOM

RLWTF-UP LOW LEVEL WASTE SUBPROJECT

PIPING & INSTRUMENTATION DIAGRAM SYMBOL LEGEND

DRAWN	V DAVISON
DESIGN	B SHREEVE
CHECKED	C MOYERS
DATE	5/8/14

BLDG. 251 TA-50

SUBMITTED MANNY TARIN

APPROVED FOR RELEASE ED ARTIQUA

Los Alamos NATIONAL LABORATORY PO Box 1663 Los Alamos, New Mexico 87545

SHEET P-0202

40 OF 118

CLASSIFICATION | REVIEWER | DATE

PROJECT ID 100761 | DRAWING NO C55865 | REV 0

CHARLES MOYERS NEW MEXICO 16839 REGISTERED PROFESSIONAL ENGINEER

05-08-14

File Location: P:\RLWTF LOW-LEVEL WASTE FACILITY\000 CAD\C55865 CAD\SHEETS\13 PLUMBING\55865-P-0202-R0.DWG
Plotted By: DAVIDSA, VANESSA; Plot Date: Friday, May 02, 2014

55525 : 1

PROCESS FLOW AND PIPING AND INSTRUMENTATION DIAGRAM LEGEND

(ALL SYMBOLS SHOWN ARE NOT NECESSARILY USED ON THE DRAWINGS)

LINE TYPES

SYMBOL	DESCRIPTION
———	PROCESS FLOW LINE
———	INSTRUMENT SUPPLY OR CONNECTION TO PROCESS
-\/-\/-	UNDEFINED SIGNAL
-P-P-	PNEUMATIC SIGNAL
- - - - - -	ELECTRIC SIGNAL
-L-L-	HYDRAULIC SIGNAL
-X-X-	CAPILLARY TUBE
~~	ELECTROMAGNETIC OR SONIC SIGNAL (GUIDED)
~ ~	ELECTROMAGNETIC OR SONIC SIGNAL (NOT GUIDED)
-o-o-	INTERNAL SYSTEM LINK (SOFTWARE OR DATA LINK)
-o-o-	MECHANICAL LINK
OPTIONAL BINARY (ON-OFF) SYMBOLS	
-P-P-	PNEUMATIC BINARY SIGNAL
-\/-\/-	ELECTRIC BINARY SIGNAL
-E-E-	ELECTRICAL HEAT TRACING
-S-S-	STEAM HEAT TRACING
XX	FP – FLOOR PENETRATION RP – ROOF PENETRATION WP – WALL PENETRATION SB – SYSTEM BREAK

INSTRUMENT/FUNCTION SYMBOLS

	PRIMARY LOCATION NORMALLY ACCESSIBLE TO OPERATOR	FIELD MOUNTED	AUXILIARY LOCATION NORMALLY ACCESSIBLE TO OPERATOR	AUXILIARY LOCATION NORMALLY INACCESSIBLE TO OPERATOR
DISCRETE INSTRUMENTS	XX XXX	XX XXX	XX XXX	XX XXX
SHARED DISPLAY, SHARED CONTROL	XX XXX	XX XXX	XX XXX	XX XXX
COMPUTER FUNCTION	XX XXX	XX XXX	XX XXX	XX XXX
PROGRAMMABLE LOGIC CONTROL	XX XXX	XX XXX	XX XXX	XX XXX
XX XXX FLOW INDICATOR		XX XXX XX XXX INSTRUMENTS SHARING COMMON HOUSING		
X XX PANEL MOUNTED PATCHBOARD POINT 12				

VALVE & INSTRUMENTATION FUNCTION IDENTIFIERS (SELECTED)

FIRST-LETTERS	INITIATING, MEASURED, OR CONTROLLED VARIABLE	CONTROLLERS			VALVES	READOUT DEVICE		SWITCHES AND ALARM DEVICES *			TRANSMITTERS			SOLENOIDS, RELAYS, COMPUTING DEVICES	PRIMARY ELEMENT	TEST POINT	WELL OR PROBE	VIEWING DEVICE, GLASS	SAFETY DEVICE	FINAL ELEMENT
		RECORDING	INDICATING	BLIND		RECORDING	INDICATING	HIGH**	LOW	COMB	RECORDING	INDICATING	BLIND							
A	ANALYSIS	ARC	AIC	AC		AR	AI	ASH	ASL	ASHL	ART	AIT	AT	AY	AE	AP	AW			AV
B	BURNER/ COMBUSTION	BRC	BIC	BC		BR	BI	BSH	BSL	BSHL	BRT	BIT	BT	BY	BE		BW	BG		BZ
C	CONDUCTIVITY		CIC	CC										CCD	CE					
D	USER'S CHOICE																			
E	VOLTAGE	ERC	EIC	EC		ER	EI	ESH	ESL	ESHL	ERT	EIT	ET	EY	EE					EZ
F	FLOW RATE	FRC	FIC	FC	FCV FICV	FR	FI	FSH	FSL	FSHL	FRT	FIT	FT	FY	FE	FP		FG		FV
FQ	FLOW QUANTITY	FQRC	FQIC			FQR	FQI	FQSH	FQSL			FQIT	FQT	FQY	FQE					FQV
FF	FLOW RATIO	FFRC	FFIC	FFC		FFR	FFI	FFSH	FFSL						FE					FFV
G	USER'S CHOICE																			
H	HAND		HIC	HC	HV					HS										HV
I	CURRENT	IRC	IIC			IR	II	ISH	ISL	ISHL	IRT	IIT	IT	IY	IE					IZ
J	POWER	JRC	JIC	ARC		JR	JI	JSH	JSL	JSHL	JRT	JIT	JT	JY	JE					JV
K	TIME	KRC	KIC	KC	KCV	KR	KI	KSH	KSL	KSHL	KRT	KIT	KT	KY	KE					KV
L	LEVEL	LRC	LIC	LC	LCV	LR	LI	LSH	LSL	LSHL	LRT	LIT	LT	LY	LE		LW	LG		LV
M	MOISTURE/ HUMIDITY						MI						MT							
N	USER'S CHOICE																			
O	USER'S CHOICE																			
P	PRESSURE VACUUM	PRC	PIC	PC	PCV	PR	PI	PSH	PSL	PSHL	PRT	PIT	PT	PY	PE	PTP			PSV PSE	PV
PD	PRESSURE DIFFERENTIAL	PDRC	PDIC	PDC	PDCV	PDR	PDI	PDSH	PDSL		PDRT	PDIT	PDT	PDY	PE	PTP				PDV
Q	QUANTITY	QRC	QIC			QR	QI	QSH	QSL	QSHL	QRT	QIT	QT	QY	QE					QZ
R	RADIATION	RRC	RIC	RC		RR	RI	RSH	RSL	RSHL	RRT	RIT	RT	RY	RE		RW			RZ
S	SPEED	SRC	SIC	SC	SCV	SR	SI	SSH	SSL	SSHL	SRT	SIT	ST	SY	SE					SV
T	TEMPERATURE	TRC	TIC	TC	TCV	TR	TI	TSH	TSL	TSHL	TRT	TIT	TT	TY	TE	TP	TW		TSE	TV
T	TEMPERATURE DIFFERENTIAL	TDRC	TDIC	TDC	TDCV	TDR	TDI	TDSH	TDSL		TDRT	TDIT	TDT	TDY	TDE	TDP TP	TDW TW			TDV
U	MULTIVARIABLE					UR	UI							UY						UV
V	MACHINERY VIBRATION ANALYSIS					VR	VI	VSH VS	VSL	VSHL	VRT	VIT	VT	VY	VE					VZ
W	WEIGHT FORCE	WRC	WIC	WC	WCV	WR	WI	WSH	WSL	WSHL	WRT	WIT	WT	WY	WE					WZ
WD	WEIGHT FORCE DIFFERENTIAL	WDRC	WDIC	WDC	WDCV	WDR	WDI	WDSH	WDSL		WDRT	WDIT	WDT	WDY	WDE					WDZ
X	USER'S CHOICE																			
Y	EVENT STATE PRESENCE		YIC	YC		YR	YI	YSH	YSL				YT	YY	YE					YZ
Z	POSITION DIMENSION	ZRC	ZIC	ZC	ZCV	ZR	ZI	ZSH	ZSL	ZSHL	ZRT	ZIT	ZT	ZY	ZE					ZV
ZD	GAUGING DEVIATION	ZDRC	ZDIC	ZDC	ZDCV	ZDR	ZDI	ZDSH	ZDSL		ZDRT	ZDIT	ZDT	ZDY	ZDE					ZDV

NOTE:
THIS TABLE IS NOT ALL-INCLUSIVE.

* A, ALARM, THE ANNUNCIATING DEVICE, MAY BE USED IN THE SAME FASHION AS S, SWITCH, THE ACTING DEVICE.

** THE LETTERS H AND L MAY BE OMITTED IN THE UNDEFINED CASE.

OTHER POSSIBLE COMBINATIONS:

FO	(RESTRICTION ORIFICE)	PFR	(RATIO)
FRK, HIK	(CONTROL STATIONS)	KOI	(RUNNING TIME INDICATOR)
FX	(ACCESSORIES)	QOI	(INDICATING COUNTER)
TJR	(SCANNING RECORDER)	WKIC	(RATE-OF-WEIGHT-LOSS CONTROLLER)
LLH	(PILOT LIGHT)	HMS	(HAND MOMENTARY SWITCH)

INSTRUMENT/EQUIPMENT LABELING LEGEND

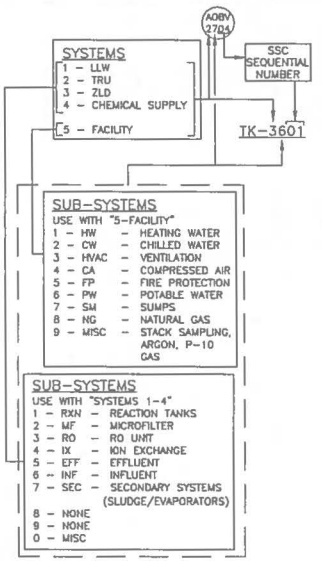

(ALL SYMBOLS SHOWN ARE NOT NECESSARILY USED ON THE DRAWINGS)

INSTRUMENT/FUNCTION SYMBOLS

SYMBOL	DESCRIPTION
X	P = PURGE OR FLUSHING DEVICE R = RESET FOR LATCH-TYPE ACTUATOR
X	S = SOLENOID D = DIGITAL P = PILOT T = TRAP M = MAGNETIC FLOWMETER SP = SET POINT
√	ROOT EXTRACTION
±	BIAS
X	MULTIPLY
>	HIGH SELECTING
<	LOW SELECTING
>	HIGH LIMITING
<	LOW LIMITING
K	PROPORTIONAL
-K	REVERSE PROPORTIONAL
+	SUMMING
÷	DIVIDING
CA-1	EQUIPMENT TAG

PLAN BREAKS & CONTINUATION FLAGS

SYMBOL	DESCRIPTION
Y# X OR X Y#	PIPE OR WIRE IS CONTINUED ON DRAWING X (INCLUDING SHEET NUMBER), GRID COORDINATE (Y#); FLOW IS TO THAT DRAWING.
X Y# OR Y# X	PIPE OR WIRE IS CONTINUED ON DRAWING X (INCLUDING SHEET NUMBER), GRID COORDINATE (Y#); FLOW IS FROM THAT DRAWING.
X Y#	PIPE OR WIRE IS CONTINUED ON DRAWING X (INCLUDING SHEET NUMBER), GRID COORDINATE (Y#); FLOW IS IN BOTH DIRECTIONS

INTERLOCK SYMBOL

I X — HARD WIRED INTERLOCK

INTERLOCK NUMBER

CHARLES MOYERS NEW MEXICO 16839 REGISTERED PROFESSIONAL ENGINEER

05-09-14

NO	DATE	CLASS REV	ADC	DESCRIPTION	DWN	DES	CHKD	SUB	APP

AECOM

RLWTF-UP LOW LEVEL WASTE SUBPROJECT

PIPING & INSTRUMENTATION DIAGRAM SYMBOL LEGEND

DRAWN	V DAVISON
DESIGN	B SHREEVE
CHECKED	C MOYERS
DATE	5/8/14

BLDG. 251 TA-50

SUBMITTED MANNY TARIN — APPROVED FOR RELEASE ED ARTIGLIA

Los Alamos NATIONAL LABORATORY PO Box 1663 Los Alamos, New Mexico 87545

SHEET P-0203

41 OF 118

CLASSIFICATION | REVIEWER | DATE

PROJECT ID 100761 | DRAWING NO C55865 | REV 0

9251 1

File Location: P:\RLWTF LOW-LEVEL WASTE FACILITY\300 CAD\C55865 CUR\SHEETS\13 PLUMBING\55865-P-0203-R0.DWG
Plotted By: DAVISON, VANESSA; Plot Date: Friday, May 02, 2014

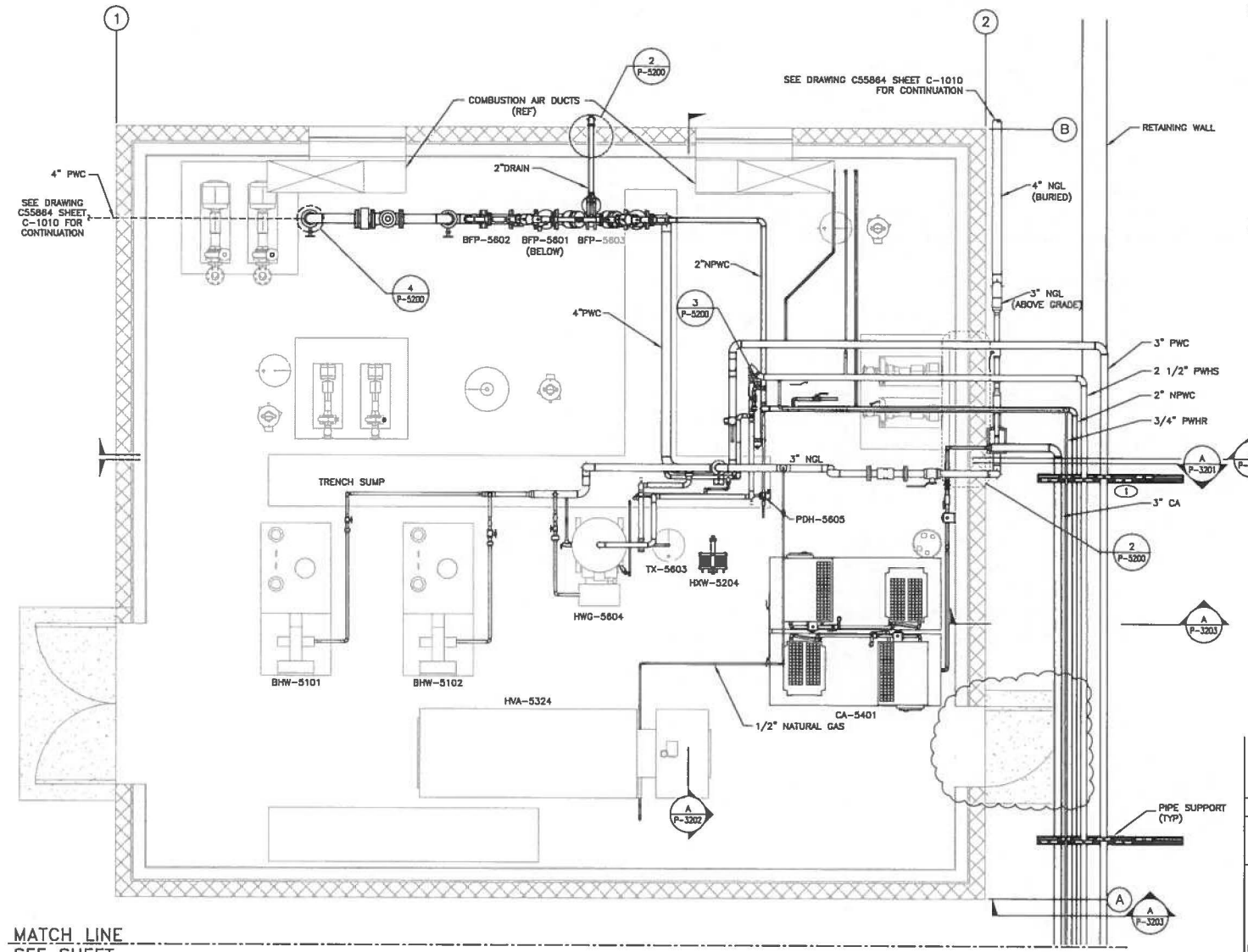

PIPING PLAN
1/2"=1'-0"

GENERAL NOTES

1. IF THIS SHEET IS NOT 24'x 36', THEN IT IS A REDUCED SIZE PLOT. USE GRAPHIC SCALE ACCORDINGLY.
2. SEE SHEETS P-0201 THROUGH P-0203 FOR GENERAL PLUMBING NOTES, LEGEND AND ABBREVIATIONS.
3. SEE SHEETS P-7200 AND P-7201 FOR PLUMBING EQUIPMENT LIST.

KEYED NOTES

1. FOR PIPE SUPPORT DETAILS, SEE SHEET Q-5202.

NO	DATE	CLASS REV	ADC	DESCRIPTION	DWN	DES	CHKD	SUB	APP
1	7/7/14	U		ADDED DOOR					

AECOM

RLWTF-UP LOW LEVEL WASTE SUBPROJECT

PIPING PLAN

BLDG. 251 TA-50

DRAWN	V DAVISON
DESIGN	B SHREEVE
CHECKED	C MOYERS
DATE	5/8/14

SUBMITTED: MANNY TARIN

APPROVED FOR RELEASE: ED ARTIGLIA

Los Alamos NATIONAL LABORATORY PO Box 1663 Los Alamos, New Mexico 87545

SHEET P-1200

42 OF 118

CLASSIFICATION | REVIEWER | DATE

PROJECT ID 100761 | DRAWING NO C55865 | REV 1

M. EVELYN ROGERS NEW MEXICO 22184 PROFESSIONAL ENGINEER

File Location: V:\RLWTF LOW-LEVEL WASTE FACILITY\500 CAD\C55865 CUD\SHEETS\L3 PLUMBING\C55865-P-1200-RLWG
Plotted By: GALLEGOS, ALAN Plot Date: Thursday, July 03, 2014

: 12527

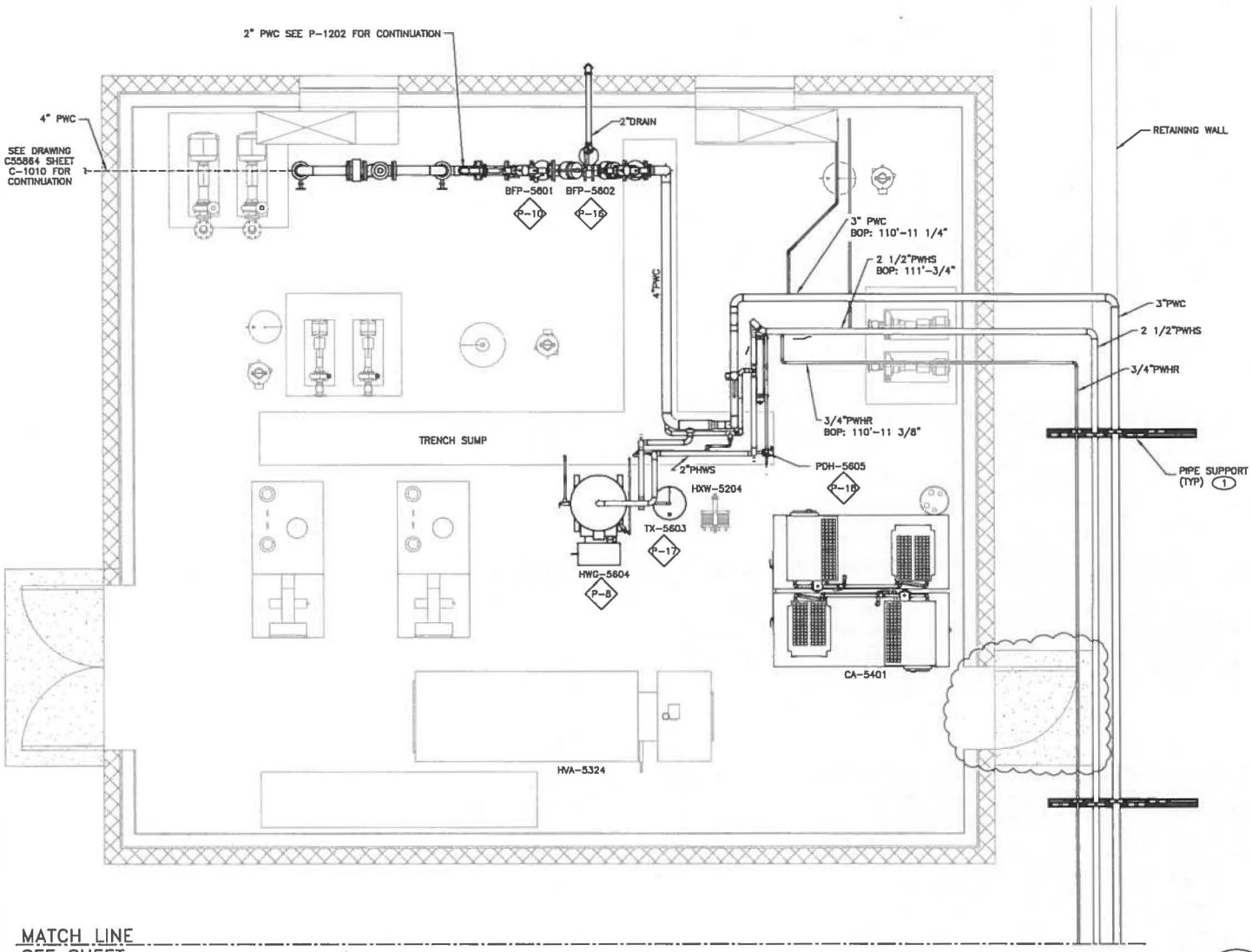

POTABLE WATER PIPING PLAN

1/2"=1'-0"

GENERAL NOTES

1. IF THIS SHEET IS NOT 24"x 36", THEN IT IS A REDUCED SIZE PLOT. USE GRAPHIC SCALE ACCORDINGLY.
2. SEE SHEETS P-0201 THROUGH P-0203 FOR GENERAL PLUMBING NOTES, LEGEND AND ABBREVIATIONS.
3. SEE SHEETS P-7200 AND P-7201 FOR PLUMBING EQUIPMENT LIST.

KEYED NOTES

1. FOR PIPE SUPPORT DETAILS, SEE SHEET Q-5202.

NO	DATE	CLASS REV	ADC	DESCRIPTION	DWN	DES	CHKD	SUB	APP
1	7/7/14	U		ADDED DOOR					

AECOM

RLWTF-UP LOW LEVEL WASTE SUBPROJECT

POTABLE WATER PIPING PLAN

BLDG. 251 TA-50

DRAWN	V DAVISON
DESIGN	B SHREEVE
CHECKED	C MOYERS
DATE	5/8/14

SUBMITTED: MANNY TARIN

APPROVED FOR RELEASE: ED ARTIOLA

Los Alamos NATIONAL LABORATORY PO Box 1663 Los Alamos, New Mexico 87545

SHEET P-1201

43 OF 118

CLASSIFICATION | REVIEWER | DATE

PROJECT ID 100761 | DRAWING NO C55865 | REV 1

M. EVELYN ROGERS NEW MEXICO 22164 PROFESSIONAL ENGINEER

File Location: V:\RLWTF LOW-LEVEL WASTE FACILITY\300 CAD\C55865 CUB\SHEETS\13 PLUMBING\55865-P-1201-RLWG
Plotted By: DELUZZA, ALAN Plot Date: Thursday, July 03, 2014

: 12528

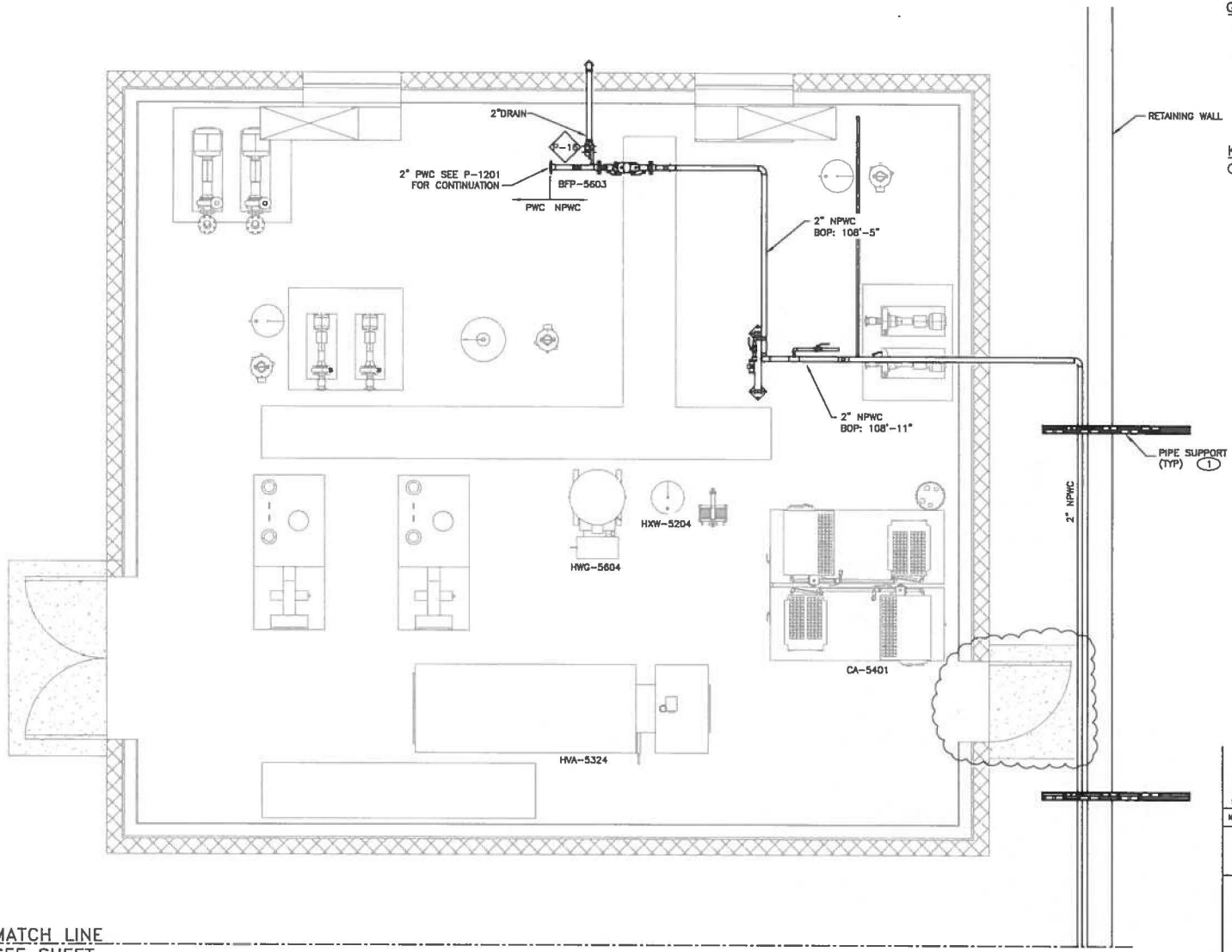

NON-POTABLE WATER PIPING PLAN

1/2"=1'-0"

GENERAL NOTES

1. IF THIS SHEET IS NOT 24"x 36", THEN IT IS A REDUCED SIZE PLOT. USE GRAPHIC SCALE ACCORDINGLY.
2. SEE SHEETS P-0201 THROUGH P-0203 FOR GENERAL PLUMBING NOTES, LEGEND AND ABBREVIATIONS.
3. SEE SHEETS P-7200 AND P-7201 FOR PLUMBING EQUIPMENT LIST.

KEYED NOTES

1. FOR PIPE SUPPORT DETAILS, SEE SHEET Q-5202.

NO	DATE	CLASS REV	ADC	DESCRIPTION	DRN	DES	CHKD	SUB	APP
1	7/7/14	U		ADDED DOOR					

AECOM

RLWTF-UP LOW LEVEL WASTE SUBPROJECT

NON-POTABLE WATER PIPING PLAN

BLDG. 251 TA-50

DRAWN	V DAVISON
DESIGN	B SHREEVE
CHECKED	C MOYERS
DATE	5/6/14

SUBMITTED: MANNY TARIN

APPROVED FOR RELEASE: ED ARTIGLIA

Los Alamos NATIONAL LABORATORY PO Box 1663 Los Alamos, New Mexico 87545

SHEET P-1202

44 OF 118

CLASSIFICATION | REVIEWER | DATE

PROJECT ID 100761 | DRAWING NO C55865 | REV 1

M. EVELYN ROGERS NEW MEXICO 22184 PROFESSIONAL ENGINEER

File Location: V:\RLWTF LOW-LEVEL WASTE FACILITY\500 CAD\C55865 CUD\SHEETS\13 PLUMBING\55865-P-1202-R1.DWG
Plotted By: GRUSSER, ALAN Plot Date: Thursday, July 03, 2014

12529

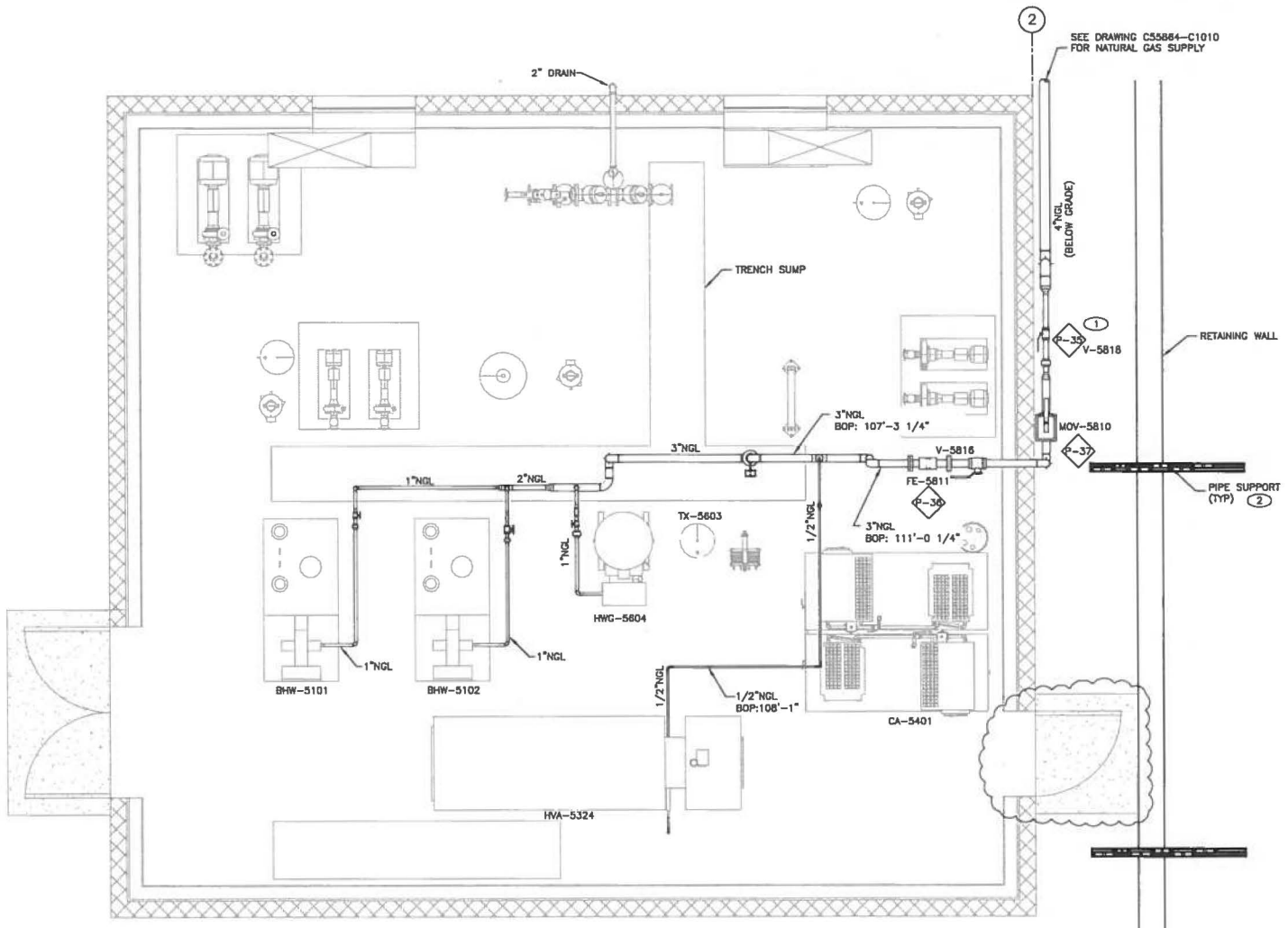

GAS PIPING PLAN

1/2"=1'-0"

GENERAL NOTES

1. IF THIS SHEET IS NOT 24"x 36", THEN IT IS A REDUCED SIZE PLOT. USE GRAPHIC SCALE ACCORDINGLY.
2. SEE SHEETS P-0201 THROUGH P-0203 FOR GENERAL PLUMBING NOTES, LEGEND AND ABBREVIATIONS.
3. SEE SHEETS P-7200 AND P-7201 FOR PLUMBING EQUIPMENT LIST.

KEYED NOTES

1. LABEL "EMERGENCY SHUT OFF".
2. FOR PIPE SUPPORT DETAILS, SEE SHEET Q-5202.

NO	DATE	CLASS REV	ADC	DESCRIPTION	DWN	DES	CHKD	SUB	APP
1	7/7/14	U		ADDED DOOR					

AECOM

RLWTF-UP LOW LEVEL WASTE SUBPROJECT

GAS PIPING PLAN

BLDG. 251 TA-50

DRAWN	V DAVISON
DESIGN	B SHREEVE
CHECKED	C MOYERS
DATE	8/8/14

SUBMITTED: MANNY TARIN

APPROVED FOR RELEASE: ED ARTIGLIA

Los Alamos NATIONAL LABORATORY PO Box 1663 Los Alamos, New Mexico 87545

SHEET P-1203

45 OF 118

CLASSIFICATION | REVIEWER | DATE

PROJECT ID 100761 | DRAWING NO C55865 | REV 1

M. EVELYN ROGERS NEW MEXICO 22164 PROFESSIONAL ENGINEER

File Location: V:\RLWTF LOW-LEVEL WASTE FACILITY\500 CAD\C55865 CLIP\SHEETS\13 PLUMBING\C55865-P-1203-R1.DWG
Plotted By: CALLEDOS, ALAN Plot Date: Thursday, July 03, 2014

12530

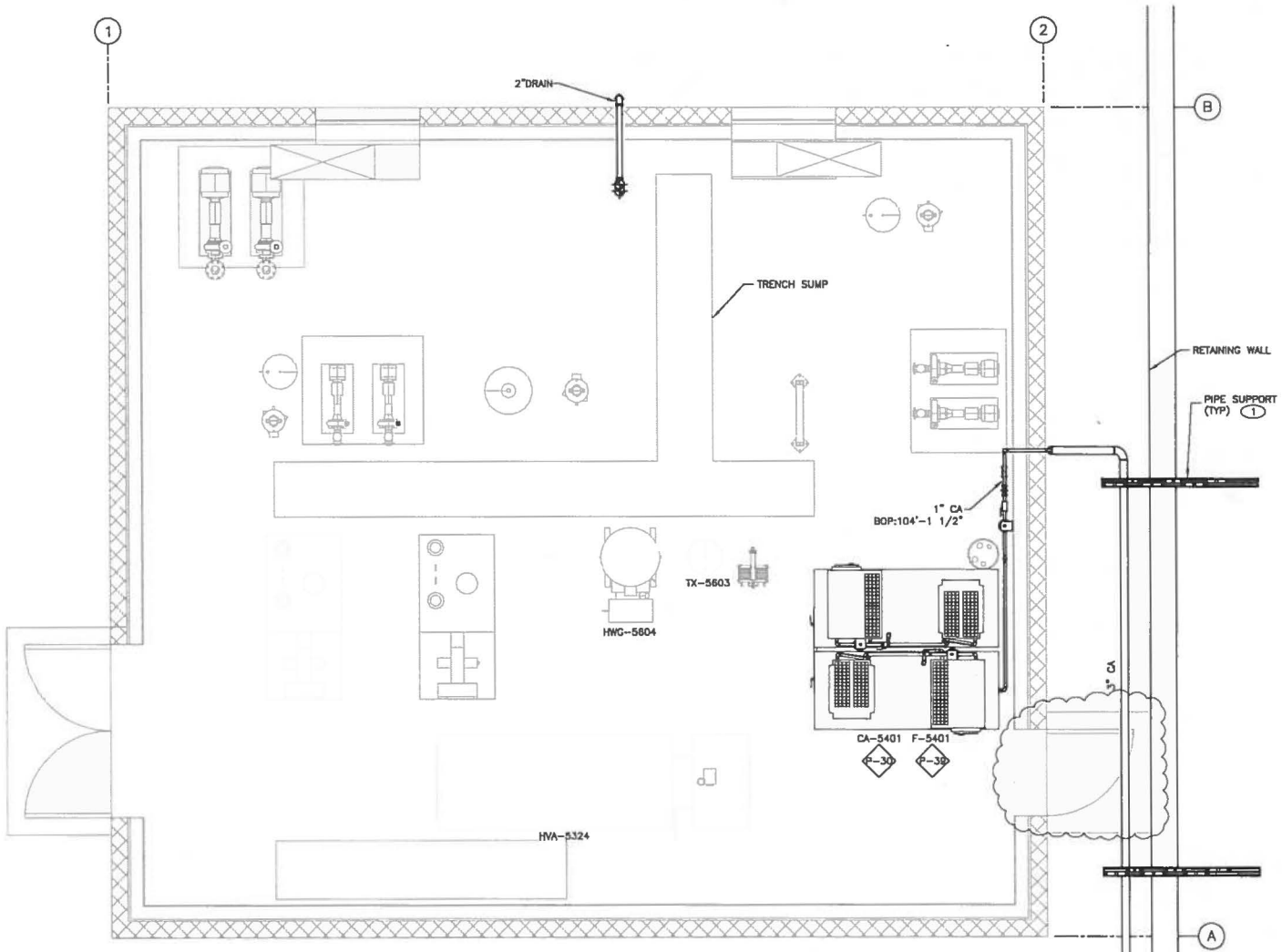

COMPRESSED AIR PLAN

1/2"=1'-0"

GENERAL NOTES

1. IF THIS SHEET IS NOT 24"x 36", THEN IT IS A REDUCED SIZE PLOT. USE GRAPHIC SCALE ACCORDINGLY.
2. SEE SHEETS P-0201 THROUGH P-0203 FOR GENERAL PLUMBING NOTES, LEGEND AND ABBREVIATIONS.
3. SEE SHEETS P-7200 AND P-7201 FOR PLUMBING EQUIPMENT LIST.

KEYED NOTES

1. FOR PIPE SUPPORT DETAILS, SEE SHEET Q-5202.

NO	DATE	CLASS REV	ADC	DESCRIPTION	DWN	DES	CHKD	SUB	APP
1	7/7/14	U		ADDED DOOR					

AECOM

RLWTF-UP LOW LEVEL WASTE SUBPROJECT

COMPRESSED AIR PLAN

BLDG. 251 TA-50

DRAWN	V DAVISON
DESIGN	B SHREEVE
CHECKED	C MOYERS
DATE	8/8/14

SUBMITTED: MANNY TARIN

APPROVED FOR RELEASE: ED ARTIGLIA

Los Alamos NATIONAL LABORATORY PO Box 1663 Los Alamos, New Mexico 87545

SHEET P-1204

46 OF 118

CLASSIFICATION | REVIEWER | DATE

PROJECT ID 100761 | DRAWING NO C55865 | REV 1

M. EVELYN ROGERS NEW MEXICO 22184 PROFESSIONAL ENGINEER

File Lanc Mars V:\RLWTF LOW-LEVEL WASTE FACILITY\500 CAD\C55865 CUR\SHEETS\13 PLUMBING\55865-P-1204-RLDWG
Plotted By: CALLEGOS, ALAN Plot Date: Thursday, July 03, 2014

12531

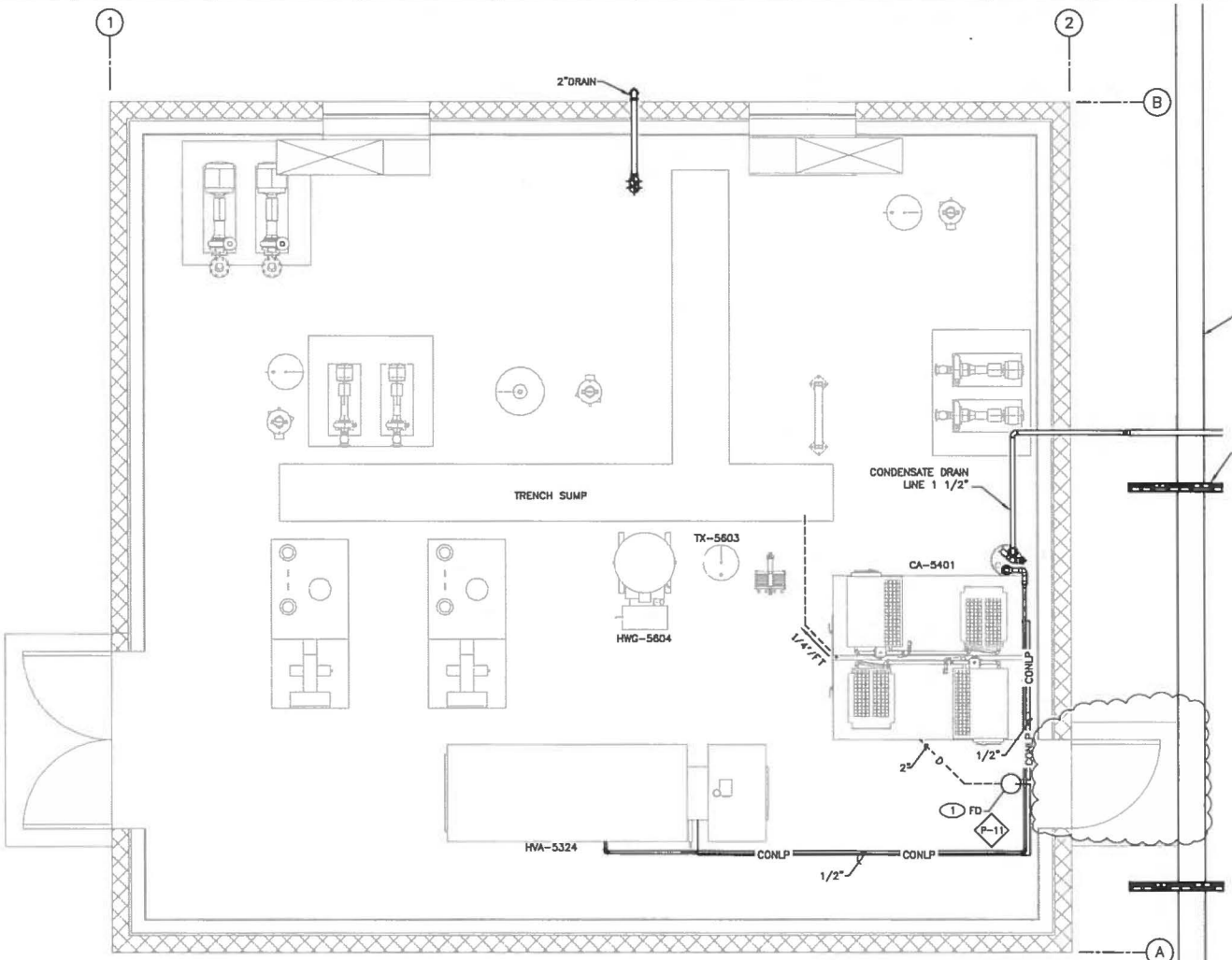

GENERAL NOTES

1. IF THIS SHEET IS NOT 24"x 36", THEN IT IS A REDUCED SIZE PLOT. USE GRAPHIC SCALE ACCORDINGLY.
2. SEE SHEETS P-7200 AND P-7201 FOR PLUMBING EQUIPMENT LIST.
3. SEE SHEETS P-0201 THROUGH P-0203 FOR GENERAL PLUMBING NOTES, LEGEND AND ABBREVIATIONS.

KEYED NOTES

(1) FLOOR DRAIN DOES NOT REQUIRE P-TRAP AND SHALL BE LABELED "CONDENSATE ONLY".

(2) FOR PIPE SUPPORT DETAILS SEE SHEET Q-5202.

CONDENSATE WASTE/DRAIN PLAN

1/2"=1'-0"

NO	DATE	CLASS REV	ADC	DESCRIPTION	DRW	DES	CHKD	SUB	APP
1	7/7/14	U		ADDED DOOR					

AECOM

RLWTF-UP LOW LEVEL WASTE SUBPROJECT

CONDENSATE WASTE/DRAIN PLAN

DRAWN	V DAVISON
DESIGN	B SHREEVE
CHECKED	C MOYERS
DATE	5/8/14

BLDG. 251 TA-50

SUBMITTED: MANNY TARIN

APPROVED FOR RELEASE: ED ARTIGLIA

Los Alamos NATIONAL LABORATORY, PO Box 1663, Los Alamos, New Mexico 87545

SHEET P-1205

47 OF 118

CLASSIFICATION | REVIEWER | DATE

PROJECT ID 100761 | DRAWING NO C55865 | REV 1

EVELYN ROGERS, NEW MEXICO, 22184, PROFESSIONAL ENGINEER

File: Lucia Mora W:\RLWTF LOW-LEVEL WASTE FACILITY\C55865 DWG\SHEETS\01 PLUMBING\C55865-P-1205-R1.DWG
Plotted By: BRUCE, ADAM Plot Date: Thursday, July 03, 2014
225321

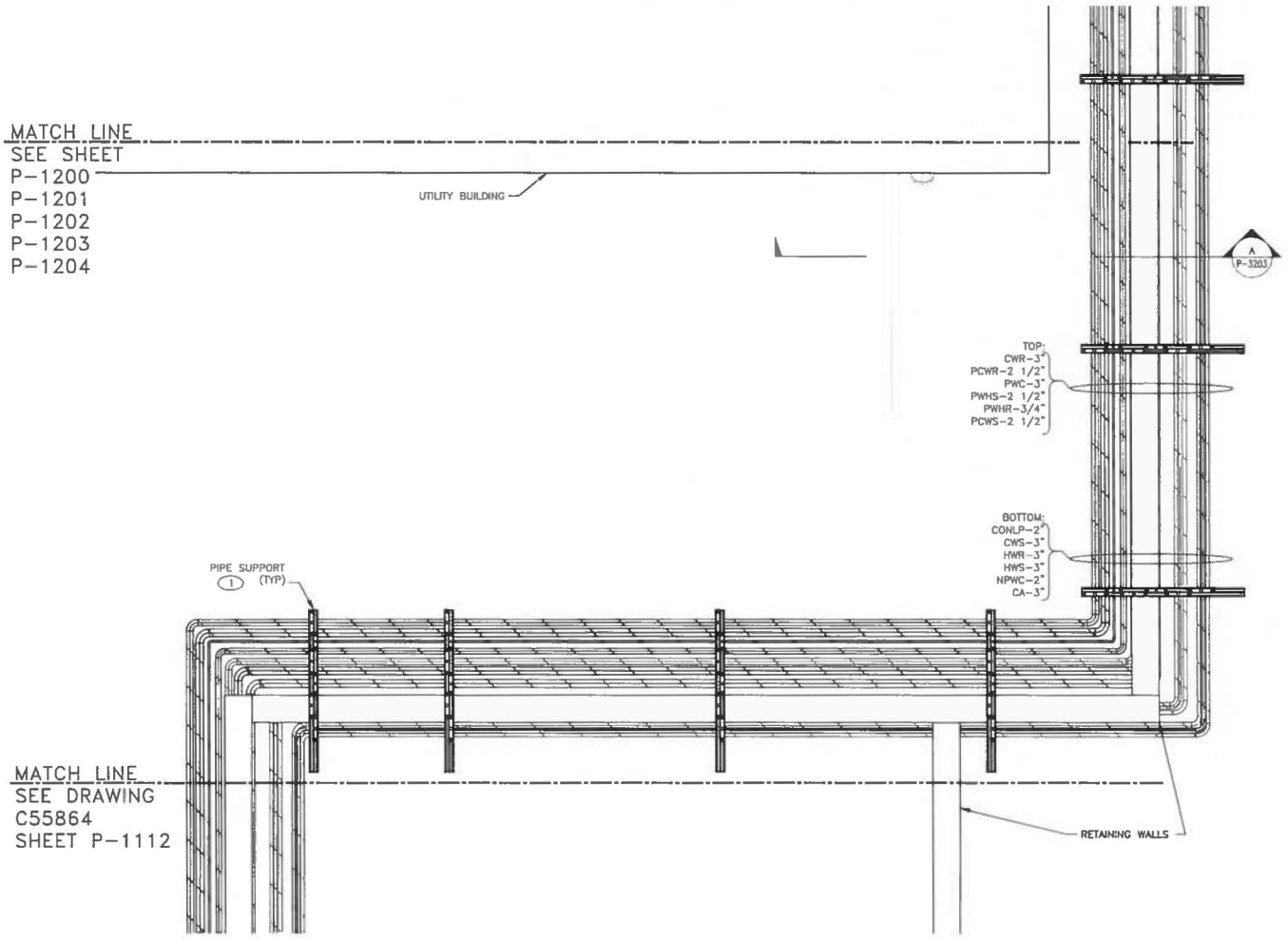

UTILITY PIPING PLAN

1/2"=1'-0"

GENERAL NOTES

1. IF THIS SHEET IS NOT 24"x 36", THEN IT IS A REDUCED SIZE PLOT. USE GRAPHIC SCALE ACCORDINGLY.
2. SEE SHEETS P-0201 THROUGH P-0203 FOR GENERAL PLUMBING NOTES, LEGEND AND ABBREVIATIONS.

KEYED NOTES

1. FOR PIPE SUPPORT DETAILS, SEE SHEET Q-5202.

NO	DATE	CLASS REV	ADC	DESCRIPTION	DWN	DES	CHKD	SUB	APP

AECOM

RLWTF-UP LOW LEVEL WASTE SUBPROJECT

UTILITY PIPING PLAN

BLDG. 251 TA-50

DRAWN	V DAVISON
DESIGN	B SHREEVE
CHECKED	C MOYERS
DATE	5/8/14

SUBMITTED: MANNY TARIN

APPROVED FOR RELEASE: ED ARTIGLIA

Los Alamos NATIONAL LABORATORY PO Box 1663 Los Alamos, New Mexico 87545

SHEET P-1206

48 OF 118

CLASSIFICATION | REVIEWER | DATE

PROJECT ID 100761 | DRAWING NO C55865 | REV 0

CHARLES MOYERS NEW MEXICO 16838 LICENSED PROFESSIONAL ENGINEER

05-08-14

File Location: PARLWTF LOW-LEVEL WASTE FACILITY\500 CAD\C55865 CUB\SHEETS\13 PLUMBING\55865-P-1206-R0.DWG
Plotted By: DAVISON, VANESSA Plot Date: Monday, May 12, 2014

12533

GENERAL NOTES

1. IF THIS SHEET IS NOT 24"x 36", THEN IT IS A REDUCED SIZE PLOT. USE GRAPHIC SCALE ACCORDINGLY.
2. ELEVATION 100'-0" CORRESPONDS TO UTILITY BUILDING 251 TOC. ELEVATION IS 7262.50.

KEYED NOTES

1. FOR PIPE SUPPORT DETAILS, SEE SHEET Q-5202.
2. PROVIDE METER WITH REMOTE ELECTRONICS. LOCATE REMOTE ELECTRONICS (READOUT) AT 60" AFF ON A WALL NEAR THE METER LOCATION.

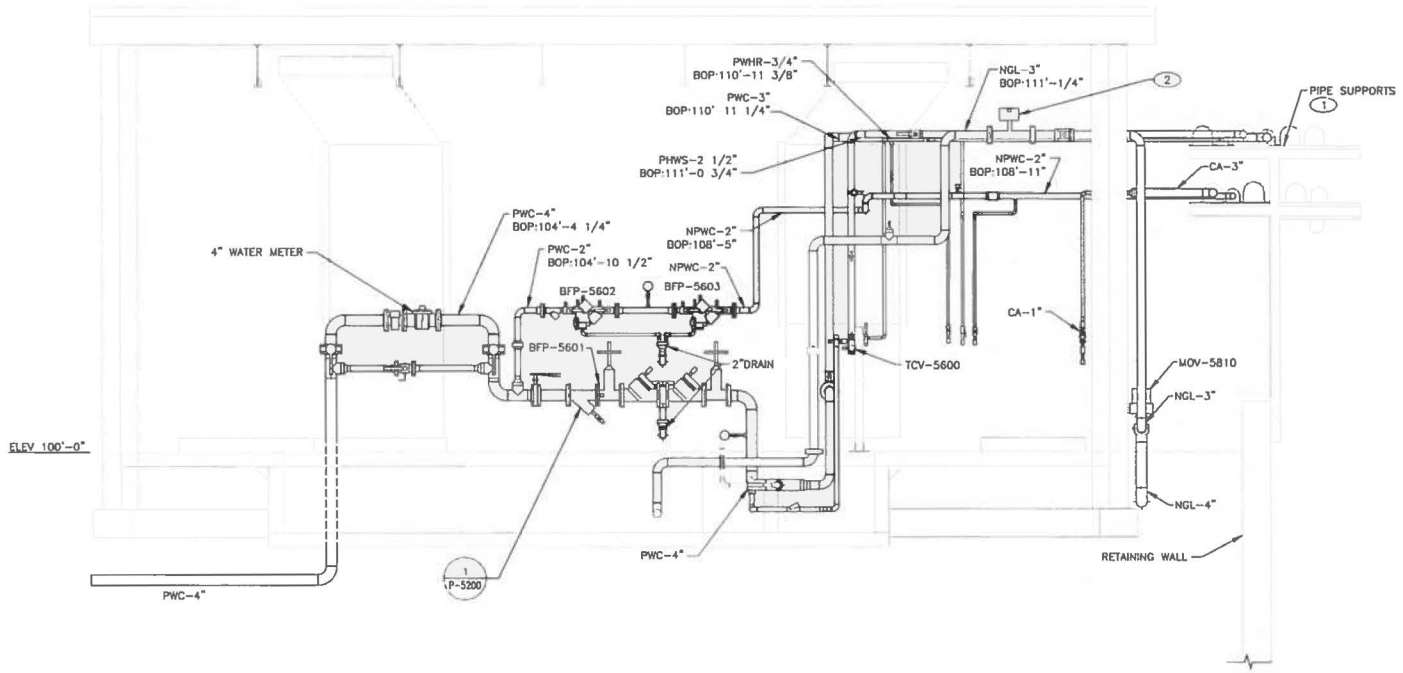

A P-1200 PLUMBING SECTION – NORTH

1/2"=1"

NO	DATE	CLASS REV	ADC	DESCRIPTION	DWN	DES	CHKD	SUB	APP

AECOM

RLWTF-UP LOW LEVEL WASTE SUBPROJECT

PLUMBING SECTION

BLDG. 251 TA-50

DRAWN	V DAVISON
DESIGN	B SHREEVE
CHECKED	C MOYERS
DATE	5/8/14

SUBMITTED MANNY TARIN

APPROVED FOR RELEASE ED ARTIGLIA

Los Alamos NATIONAL LABORATORY PO Box 1663 Los Alamos, New Mexico 87545

SHEET P-3200

49 OF 118

CLASSIFICATION | REVIEWER | DATE

PROJECT ID 100761 | DRAWING NO C55865 | REV 0

05-08-14

File Location: P:\RLWTF LOW-LEVEL WASTE FACILITY\500 CAD\C55865 CUB\SHEETS\13 PLUMBING\55865-P-3200-R0.DWG
Plotted By: DAVISON, VANESSA; Plot Date: Friday, May 02, 2014

125314

GENERAL NOTES

1. ELEVATION 100'-0" CORRESPONDS TO UTILITY BUILDING 251 TOC ELEVATION IS 7262.50.

KEYED NOTES

(1) FOR PIPE SUPPORT DETAILS, SEE SHEET Q-5202.

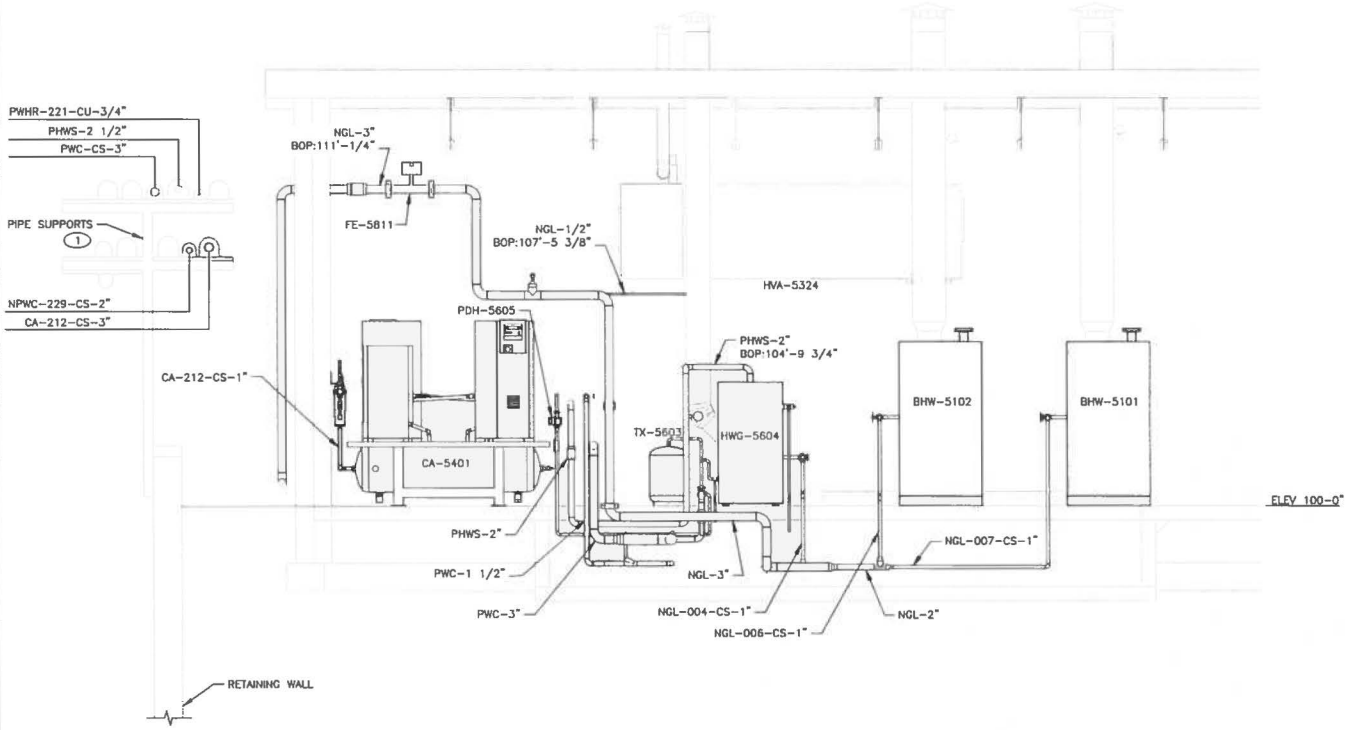

A P-1200 PLUMBING SECTION – SOUTH

2" 1" 0 1" 2"
1/2"=1"

NO	DATE	CLASS REV	ADC	DESCRIPTION	DWN	DES	CHKD	SUB	APP

AECOM

RLWTF-UP LOW LEVEL WASTE SUBPROJECT

PLUMBING SECTION

BLDG. 251 TA-50

DRAWN	V DAVISON
DESIGN	B SHREEVE
CHECKED	C MOYERS
DATE	5/6/14

SUBMITTED: MANNY TARIN

APPROVED FOR RELEASE: ED ARTIGLIA

Los Alamos NATIONAL LABORATORY PO Box 1663 Los Alamos, New Mexico 87545

SHEET P-3201

50 OF 118

CLASSIFICATION | REVIEWER | DATE

PROJECT ID 100761 | DRAWING NO C55865 | REV 0

CHARLES MOYERS NEW MEXICO 18838 LICENSED PROFESSIONAL ENGINEER

05-08-14

File Location: P:\RLWTF LOW-LEVEL WASTE FACILITY\500 CAD\C55865 CUB\SHEETS\13 PLUMBING\C55865-P-3201-R0.DWG
Plotted By: DAVISON, WAMESA; Plot Date: Friday, May 02, 2014

: 125535

GENERAL NOTES

1. ELEVATION 100'-0" CORRESPONDS TO UTILITY BUILDING 251 TOC. ELEVATION IS 7262.50.

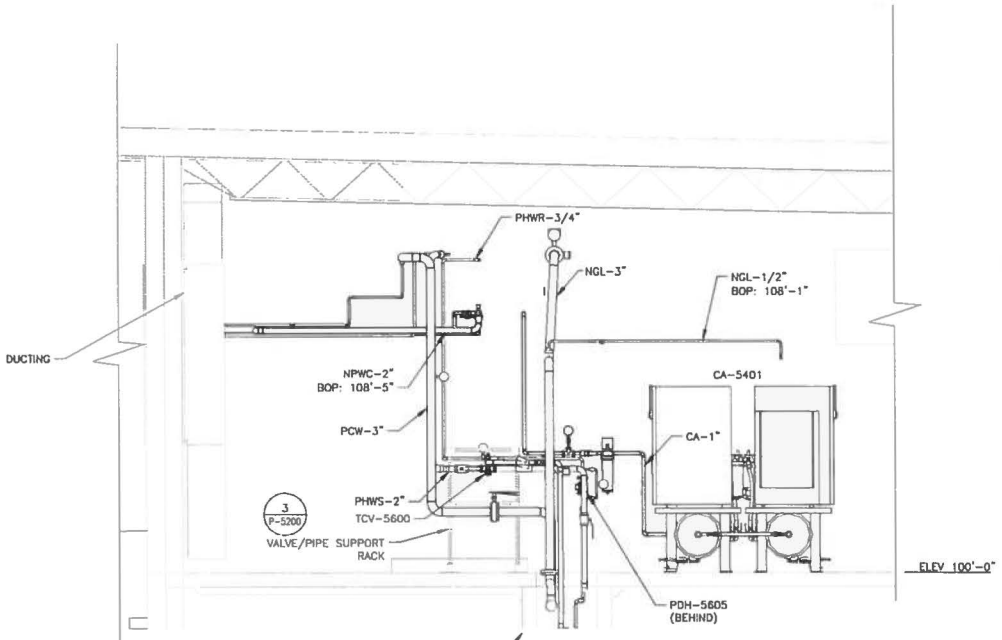

A P-1200 PLUMBING SECTION – EAST

2" 1" 0 1" 2"
1/2"=1"

NO	DATE	CLASS REV	ADC	DESCRIPTION	DWN	DES	CHKD	SUB	APP

AECOM

RLWTF-UP LOW LEVEL WASTE SUBPROJECT

PLUMBING SECTION

BLDG. 251 TA-50

DRAWN	V DAVISON
DESIGN	B SHREEVE
CHECKED	C MOYERS
DATE	5/8/14

SUBMITTED: MANNY TARIN

APPROVED FOR RELEASE: ED ARTIGLIA

Los Alamos NATIONAL LABORATORY PO Box 1663 Los Alamos, New Mexico 87545

SHEET P-3202

51 OF 118

CLASSIFICATION | REVIEWER | DATE

PROJECT ID 100761 | DRAWING NO C55865 | REV 0

CHARLES MOYERS NEW MEXICO 18838 LICENSED PROFESSIONAL ENGINEER

05-08-14

File Location: P:\RLWTF LOW-LEVEL WASTE FACILITY\500 CAD\C55865 CUB\SHEETS\13 PLUMBING\55865-P-3202-R0.DWG
Plotted By: DAVISON, WAKESIA Plot Date: Friday, May 02, 2014

95521

GENERAL NOTES

1. IF THIS SHEET IS NOT 24"x 36", THEN IT IS A REDUCED SIZE PLOT. USE GRAPHIC SCALE ACCORDINGLY.
2. PIPING IN SECTION VIEW SHOWN WITHOUT INSULATION.
3. ELEVATION 100'-0" CORRESPONDS TO UTILITY BUILDING 251 TOC. ELEVATION IS 7282.50.

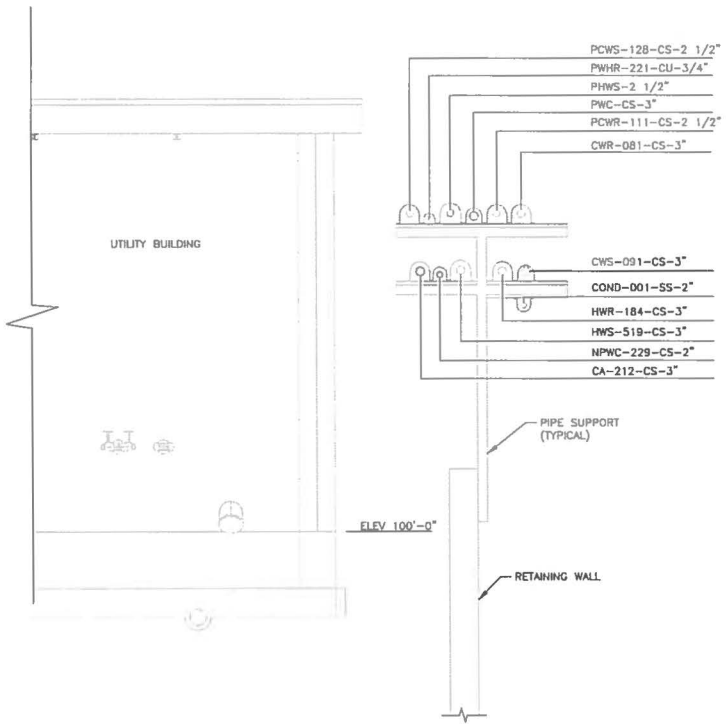

A P-1200 / A P-1206 PLUMBING RACK SECTION

3" 1" 0 1" 2"
1/2"=1"

NO	DATE	CLASS REV	ADC	DESCRIPTION	DWN	DES	CHKD	SUB	APP

AECOM

RLWTF-UP LOW LEVEL WASTE SUBPROJECT

PLUMBING SECTION

DRAWN	V DAWSON
DESIGN	B SHREEVE
CHECKED	C MOYERS
DATE	5/8/14

BLDG. 251 TA-50

SUBMITTED MANNY TARIN

APPROVED FOR RELEASE ED ARTIGLIA

Los Alamos NATIONAL LABORATORY PO Box 1663 Los Alamos, New Mexico 87545

SHEET P-3203

52 OF 118

CLASSIFICATION | REVIEWER | DATE

PROJECT ID 100761 | DRAWING NO C55865 | REV 0

CHARLES MOYERS NEW MEXICO 10839 REGISTERED PROFESSIONAL ENGINEER
05-08-14

File Location: P:\RLWTF LOW-LEVEL WASTE FACILITY\500 CAD\C55865 CUR\SHEETS\13 PLUMBING\55865-P-3203-R0.DWG
Plotted By: DAWSON, VANESSA; Plot Date: Friday, May 02, 2014

C55211

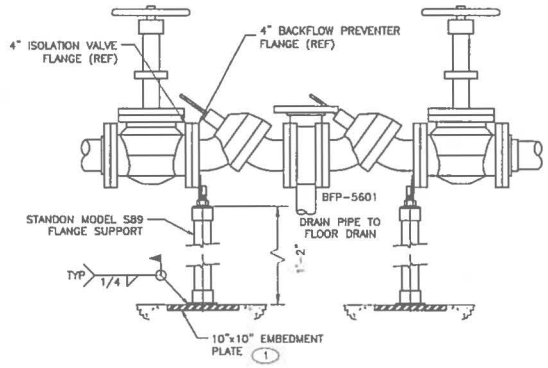

ELEVATION VIEW

(1) P-3200 BACKFLOW PREVENTER SUPPORT DETAIL

SCALE: NONE

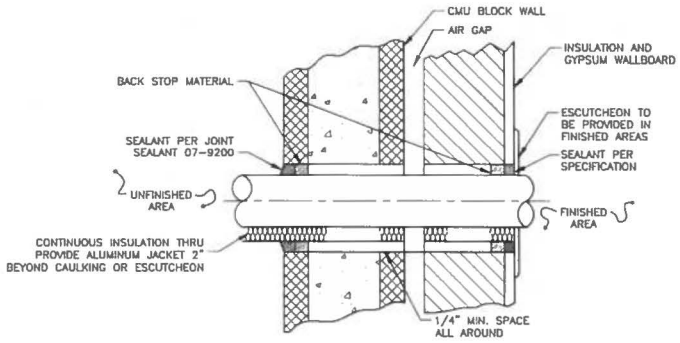

SECTION VIEW

(2) P-1200 CMU BLOCK WALL PIPE PENETRATION DETAIL

SCALE: NONE

GENERAL NOTES

1. SEE SHEETS P-7200 AND P-7201 FOR PLUMBING EQUIPMENT LIST.
2. SEE SHEETS P-0201 THRU P-0203 FOR GENERAL PLUMBING NOTES, LEGEND AND ABBREVIATIONS.

KEYED NOTES

(1) SEE SHEET Q-5200 DETAIL 1 FOR EMBED PLATE DETAIL.

(2) FIELD ROUTE AND ANCHOR HORIZONTAL PIPING USING SIMILAR HARDWARE AND B-LINE PIPE STRAPS.

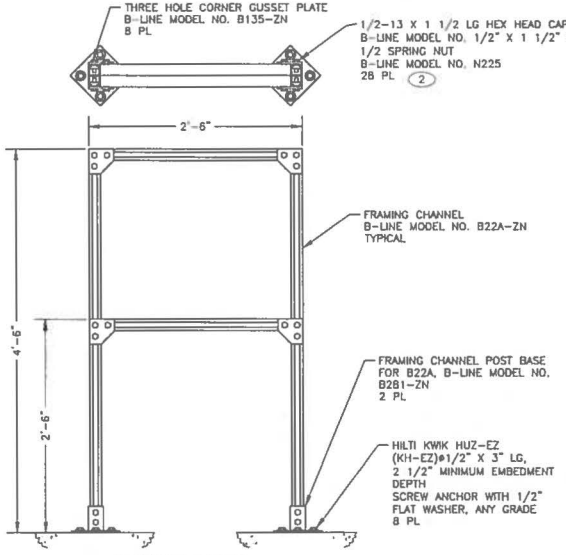

ELEVATION VIEW

(3) P-1200 (3) P-3202 PLUMBING SUPPORT DETAIL

SCALE: NONE

MECHANICAL SEAL TABLE			
NOMINAL PIPE SIZE	NOMINAL SLEEVE SIZE	METRASEAL MODEL NO.	REMARKS
4"	6"	10MS-300ES	PIPE SCHEDULE 40 STEEL PIPE, SLEEVE SCHEDULE 40 STEEL PIPE

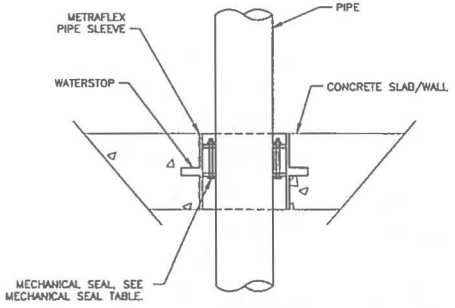

SECTION VIEW

(4) P-1200 FLOOR PIPE PENETRATION DETAIL

SCALE: NONE

NO	DATE	CLASS REV	ADC	DESCRIPTION	DWN	DES	CHKD	SUB	APP

AECOM

RLWTF-UP LOW LEVEL WASTE SUBPROJECT

DETAILS

DRAWN	V DAWSON
DESIGN	S SHREEVE
CHECKED	C MOYERS
DATE	5/8/14

BLDG. 251 TA-50

SUBMITTED MANNY TARIN

APPROVED FOR RELEASE ED ARTIGLIA

Los Alamos NATIONAL LABORATORY PO Box 1663 Los Alamos, New Mexico 87545

SHEET P-5200

53 OF 118

CLASSIFICATION REVIEWER DATE

PROJECT ID 100761

DRAWING NO C55865

REV 0

CHARLES MOYERS NEW MEXICO 18838 REGISTERED PROFESSIONAL ENGINEER

05-09-14

85521 : 12538

File Location: P:\RLWTF LOW-LEVEL WASTE FACILITY\300 CAD\C55865 CAD\SHEETS\13 PLUMBING\55865-P-5200-R0.DWG
Plotted By: DAWSON, VANESSA; Plot Date: Wednesday, May 07, 2014

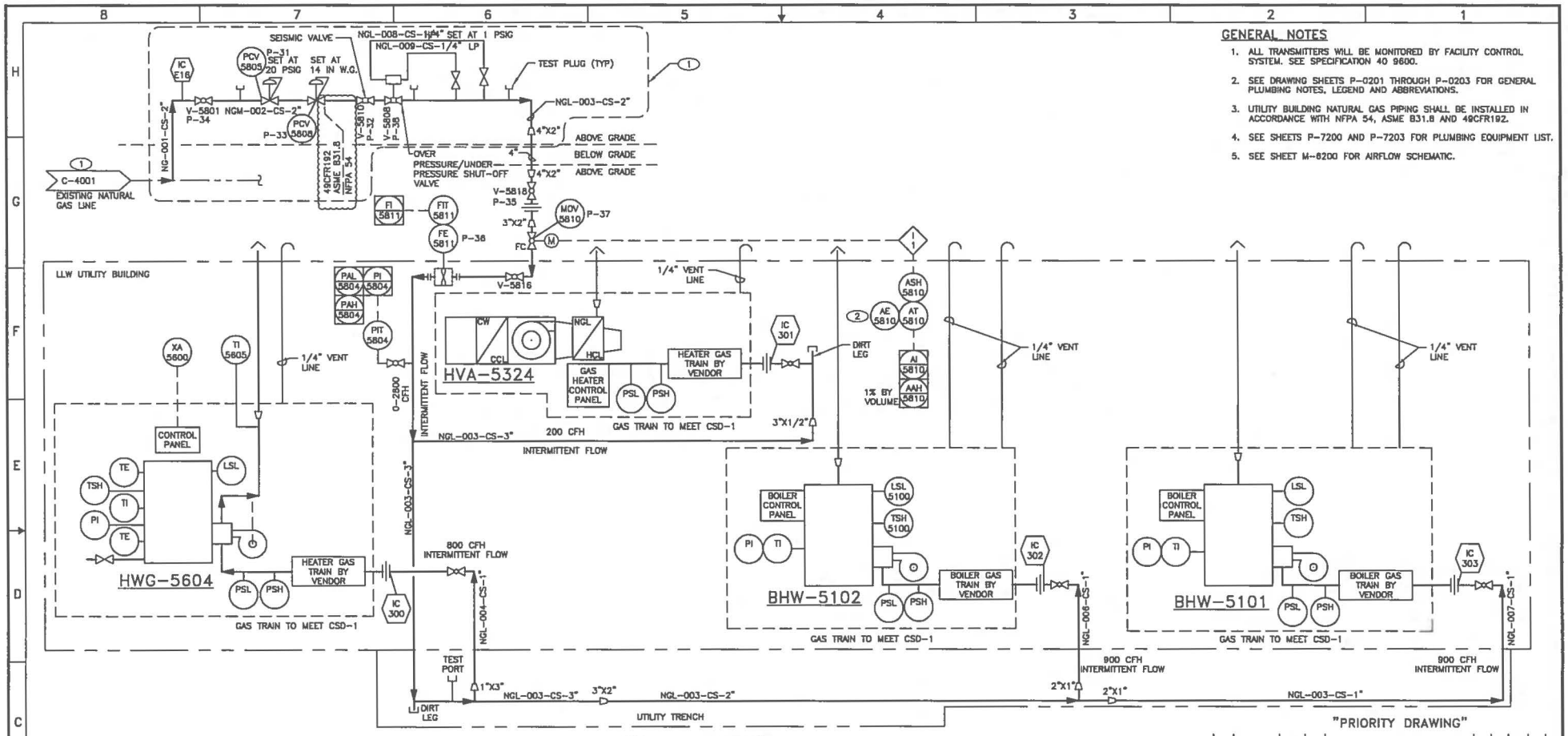

NATURAL GAS P&ID

SCALE: NONE

"PRIORITY DRAWING"

GENERAL NOTES

1. ALL TRANSMITTERS WILL BE MONITORED BY FACILITY CONTROL SYSTEM. SEE SPECIFICATION 40 9600.
2. SEE DRAWING SHEETS P-0201 THROUGH P-0203 FOR GENERAL PLUMBING NOTES, LEGEND AND ABBREVIATIONS.
3. UTILITY BUILDING NATURAL GAS PIPING SHALL BE INSTALLED IN ACCORDANCE WITH NFPA 54, ASME B31.8 AND 49CFR192.
4. SEE SHEETS P-7200 AND P-7203 FOR PLUMBING EQUIPMENT LIST.
5. SEE SHEET M-6200 FOR AIRFLOW SCHEMATIC.

SEQUENCE OF OPERATIONS:

NATURAL GAS IS SUPPLIED FROM THE EXISTING LANL NATURAL GAS MAIN. THE GAS PRESSURE IS REDUCED FROM LINE PRESSURE TO 20 PSIG BY PRV-5805, AND REDUCED AGAIN TO 14-INCHES WATER COLUMN BY PRV-5808. AN OVER PRESSURE/ UNDER PRESSURE VALVE, V-5808, WILL CLOSE IF THE PRESSURE DOWNSTREAM OF PRV-5808 EXCEEDS 12" WATER COLUMN, OR DROPS BELOW 6 INCHES WATER COLUMN. IF THERE IS A SEISMIC EVENT, V-5810, A SEISMIC SHUTOFF VALVE, WILL CLOSE AND ISOLATE THE NATURAL GAS FROM THE LLW UTILITY BUILDING. THE VALVE WILL REQUIRE A MANUAL RESET. A FLAMMABLE GAS TRANSMITTER IN THE LLW UTILITY BUILDING WILL MONITOR THE BUILDING FOR NATURAL GAS. IF THE NATURAL GAS LEVEL REACHES 1% BY VOLUME (OR AS SET), THE TRANSMITTER WILL ISSUE AN ALARM AND CLOSE MOV-5810. MOV-5810 WILL ALSO CLOSE UPON A LOSS OF POWER TO THE FLAMMABLE GAS TRANSMITTER OR THE LLW UTILITY BUILDING.

KEYED NOTES

1. NATURAL GAS SUPPLY SEE DETAIL 1 ON DRAWING C55864-C-5010.
2. NATURAL GAS SENSOR.

INTERLOCKS

1. INTERLOCK TO CLOSE MOV-5810 ON HIGH LEVEL OF NG OR LOSS OF POWER TO TRANSMITTER.

NO	DATE	CLASS REV	ADC	DESCRIPTION	DWN	DES	CHKD	SUB	APP
1	7/7/14	U		REVISED TEXT					

AECOM

RLWTF-UP LOW LEVEL WASTE SUBPROJECT

NATURAL GAS P&ID

DRAWN	V DAVISON
DESIGN	B SHREVE
CHECKED	C MOYERS
DATE	5/8/14

BLDG. 251 TA-50

SUBMITTED: MANNY TARIN

APPROVED FOR RELEASE: ED ARTIGLIA

Los Alamos NATIONAL LABORATORY — PO Box 1663, Los Alamos, New Mexico 87545

SHEET P-6200

54 OF 118

CLASSIFICATION | REVIEWER | DATE

PROJECT ID 100761 | DRAWING NO C55865 | REV 1

File Location: W:\PLANTT LOW-LEVEL WASTE FACILITY\300 CAD\C55865 CUR\SHEETS\13 PLUMBING\C55865-P-6200-R1.DWG
Plotted By: BRODMAN, DARLENE Plot Date: Wednesday, July 02, 2014
65521

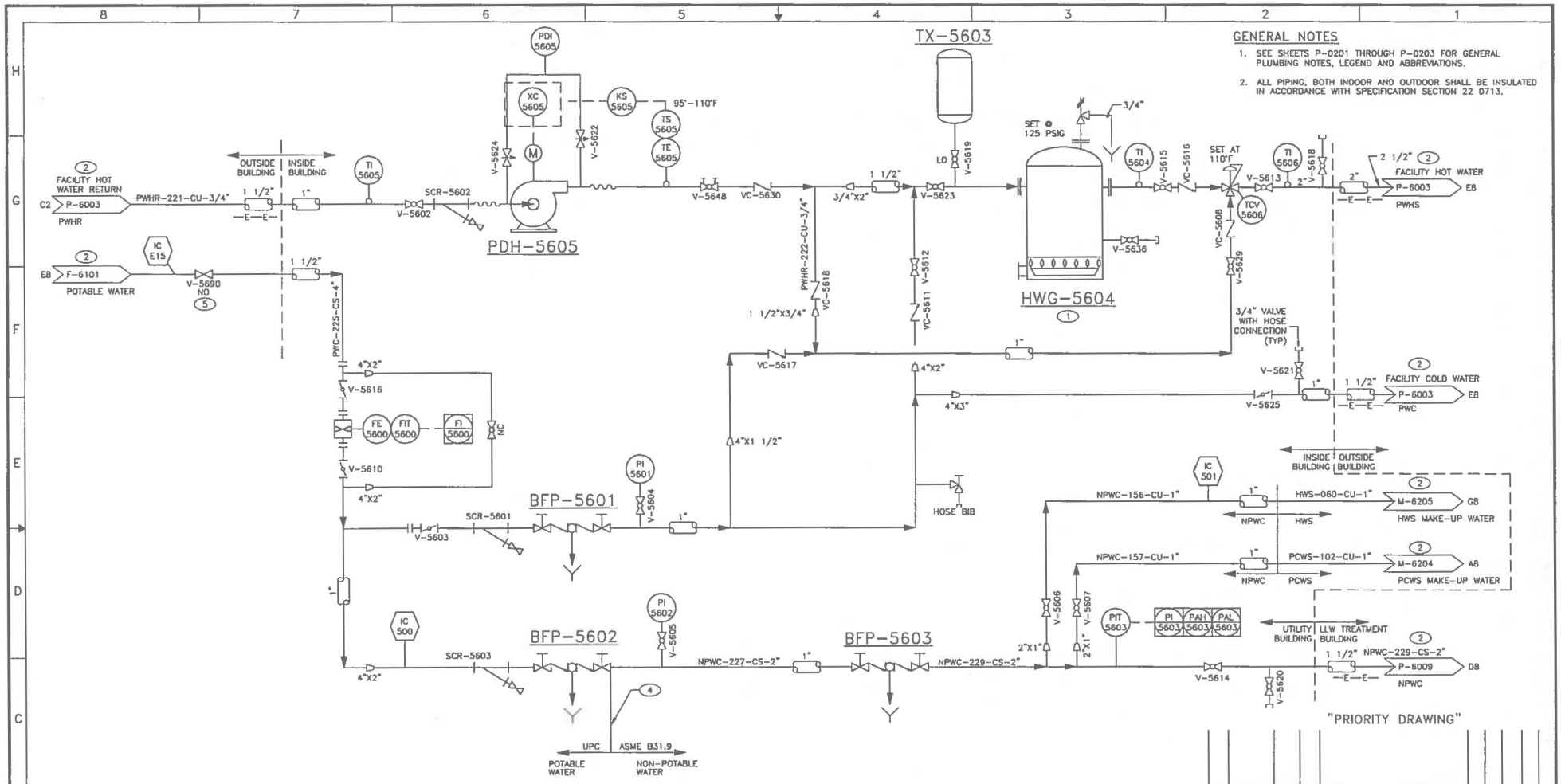

GENERAL NOTES

1. SEE SHEETS P-0201 THROUGH P-0203 FOR GENERAL PLUMBING NOTES, LEGEND AND ABBREVIATIONS.
2. ALL PIPING, BOTH INDOOR AND OUTDOOR SHALL BE INSULATED IN ACCORDANCE WITH SPECIFICATION SECTION 22 0713.

POTABLE & NON-POTABLE WATER P&ID

SCALE: NONE

SEQUENCE OF OPERATIONS:

POTABLE WATER IS SUPPLIED FROM THE EXISTING LANL POTABLE WATER SYSTEM. COLD WATER IS DISTRIBUTED TO THE HOT WATER HEATER, HWG-5604 AND THE PLUMBING FIXTURES IN THE LLW TREATMENT BUILDING. HOT WATER FROM HWG-5604 IS TEMPERED FROM 140 F TO 110 F AT THE TEMPERING VALVE TCV-5600. COLD WATER IS MIXED WITH THE HOT WATER TO DELIVER THE TEMPERED WATER TO THE LLW TREATMENT BUILDING. THE HOT WATER RECIRCULATION PUMP, PDH-5605, WILL OPERATE VIA A TIME CLOCK, KS-5605, AND TEMPERATURE SWITCH TS-5605. THE PUMP WILL BE CYCLED ON DURING OCCUPIED PERIODS AND WHEN RETURN WATER TEMPERATURE IS LESS THAN 95°F. THE PUMP WILL BE OFF DURING UNOCCUPIED PERIODS AND WHEN THE RETURN WATER TEMPERATURE IS GREATER THAN 105°F. THE PUMP WILL MAINTAIN CIRCULATION THROUGH THE TEMPERED WATER VALVE AND THE HOT WATER HEATER TO MAINTAIN HOT WATER SUPPLY TEMPERATURE TO THE LLW TREATMENT BUILDING.

KEYED NOTES

1. FOR NATURAL GAS P&ID SEE DRAWING C55865 SHEET P-6200.
2. SHEET NUMBERS ARE FROM DRAWING C55864, BUILDING 230.
3. NOT USED.
4. TRANSITION FROM THE UNIFORM PLUMBING CODE TO ASME B31.9 SERVICE.
5. ISOLATION VALVE LOCATED AT TIE IN LOCATION.

NO	DATE	CLASS REV	ADC	DESCRIPTION	DWN	DES	CHKD	SUB	APP

AECOM

RLWTF-UP LOW LEVEL WASTE SUBPROJECT

POTABLE & NON-POTABLE WATER P&ID

BLDG. 251 TA-50

DRAWN	V DAWSON
DESIGN	B SHREEVE
CHECKED	C MOYERS
DATE	5/8/14

SUBMITTED MANNY TARIN — APPROVED FOR RELEASE ED ARTIGLIA

Los Alamos NATIONAL LABORATORY — PO Box 1663, Los Alamos, New Mexico 87545

SHEET P-6201 — 55 OF 118

CLASSIFICATION — REVIEWER — DATE

PROJECT ID 100761 — DRAWING NO C55865 — REV 0

05-09-14

File Location: P:\RLWTF LOW-LEVEL WASTE FACILITY\500 CAD\C55865 CUR\SHEETS\13 PLUMBING\55865-P-6201-RD.DWG
Plotted By: DAWSON, VANESSA Plot Date: Friday, May 02, 2014

GENERAL NOTES

1. SEE SHEETS P-0201 THROUGH P-0203 FOR GENERAL PLUMBING NOTES, LEGEND AND ABBREVIATIONS.
2. COMPRESSED AIR PIPING SHALL BE INSTALLED IN ACCORDANCE WITH ASME B31.3.
3. ALL PIPING, BOTH INDOOR AND OUTDOOR SHALL BE INSULATED IN ACCORDANCE WITH SPECIFICATION SECTION 22 0713.

KEYED NOTES

1. FEMALE QUICK DISCONNECT.
2. SHEET NUMBER IS FROM DRAWING C55864, BUILDING 230.
3. COMPRESSED AIR EQUIPMENT SUPPLIED BY VENDOR.

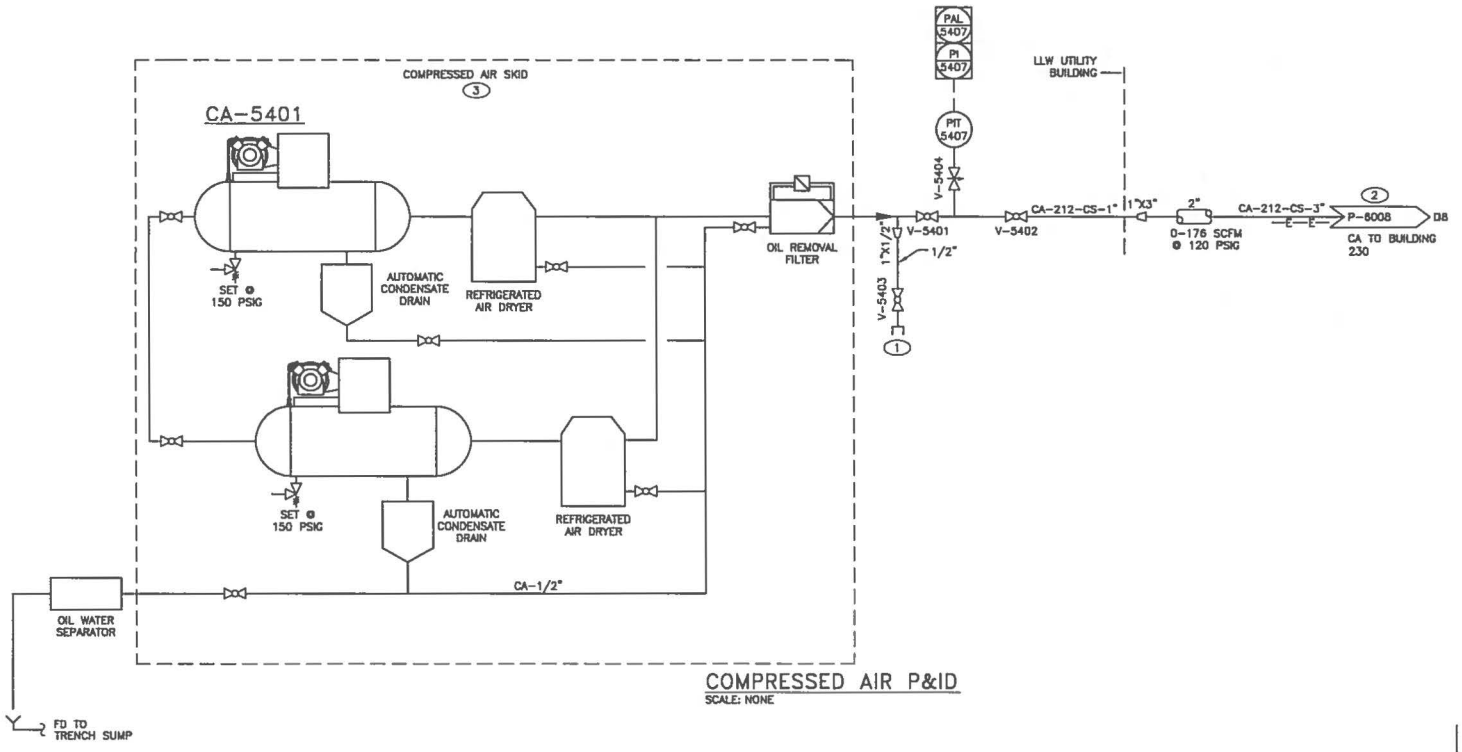

COMPRESSED AIR P&ID
SCALE: NONE

SEQUENCE OF OPERATIONS:

THE COMPRESSED AIR SYSTEM CONSISTS OF TWO AIR COMPRESSORS IN A LEAD/LAG ARRANGEMENT. PLACE BOTH COMPRESSORS IN THE ON POSITION. THE LEAD COMPRESSOR WILL START WHEN PRESSURE IN RECEIVER DROPS TO A PRESET PRESSURE 105 PSIG (FACTORY SET) AND OPERATE UNTIL PRESSURE REACHED 120 PSIG (FACTORY SET). LEAD PUMP WILL TURN OFF AND THE CONTROL SYSTEM WILL CHANGE THE LAG PUMP TO LEAD AND THE LEAD PUMP TO LAG. IF THE NEED FOR COMPRESSED AIR EXCEEDS THE CAPACITY OF THE OPERATING COMPRESSOR, THE LAG PRESSURE SWITCH WILL CLOSE STARTING THE LAG COMPRESSOR. AS PRESSURE BUILDS IN THE RECEIVER THE LAG COMPRESSOR WILL SHUT OFF AND THE LEAD COMPRESSOR WILL CONTINUE TO RUN UNTIL PRESSURE IN THE RECEIVER REACHED THE SETPOINT.

"PRIORITY DRAWING"

NO	DATE	CLASS REV	ADC	DESCRIPTION	DWN	DES	CHKD	SUB	APP

AECOM

RLWTF-UP LOW LEVEL WASTE SUBPROJECT

COMPRESSED AIR P&ID

BLDG. 251 TA-50

DRAWN	V DAWSON
DESIGN	B SHREEVE
CHECKED	C MOYERS
DATE	6/8/14

SUBMITTED MANNY TARIN

APPROVED FOR RELEASE ED ARTIGUA

Los Alamos NATIONAL LABORATORY PO Box 1663 Los Alamos, New Mexico 87545

SHEET P-6202

56 OF 118

CLASSIFICATION | REVIEWER | DATE

PROJECT ID 100761 | DRAWING NO C55865 | REV 0

CHARLES MOYERS NEW MEXICO 16838 LICENSED PROFESSIONAL ENGINEER

05-08-14

File Location: P:_TECHNOLOGY\60239831 - RLWTF\400 STUDIES, DESIGN\460 DESIGN SUBMISSIONS\461 CONCEPT DESIGN\DEL DL5-6-14 FINAL\DEL DX DRAWINGS\251-LLW UTILITY BUILDING\BLDG 251 CAD FILES\251-PLUMBING\55865-P-6202-R0.DWG
Plotted By: TARIN, MANUEL; Plot Date: Wednesday, June 04, 2014

12541

GENERAL NOTES

1. SEE SHEETS P-0201 THROUGH P-0203 FOR GENERAL PLUMBING NOTES, LEGEND AND ABBREVIATIONS.

KEYED NOTES

(1) SHEET NUMBERS ARE FROM DRAWING C55864, BUILDING 230.

(2) FOR MAKE UP WATER PROCESSES, SHEETS M-6204 AND M-6205.

(3) PRE-CHARGE EXPANSION TANK TX-5603 TO 50 PSIG.

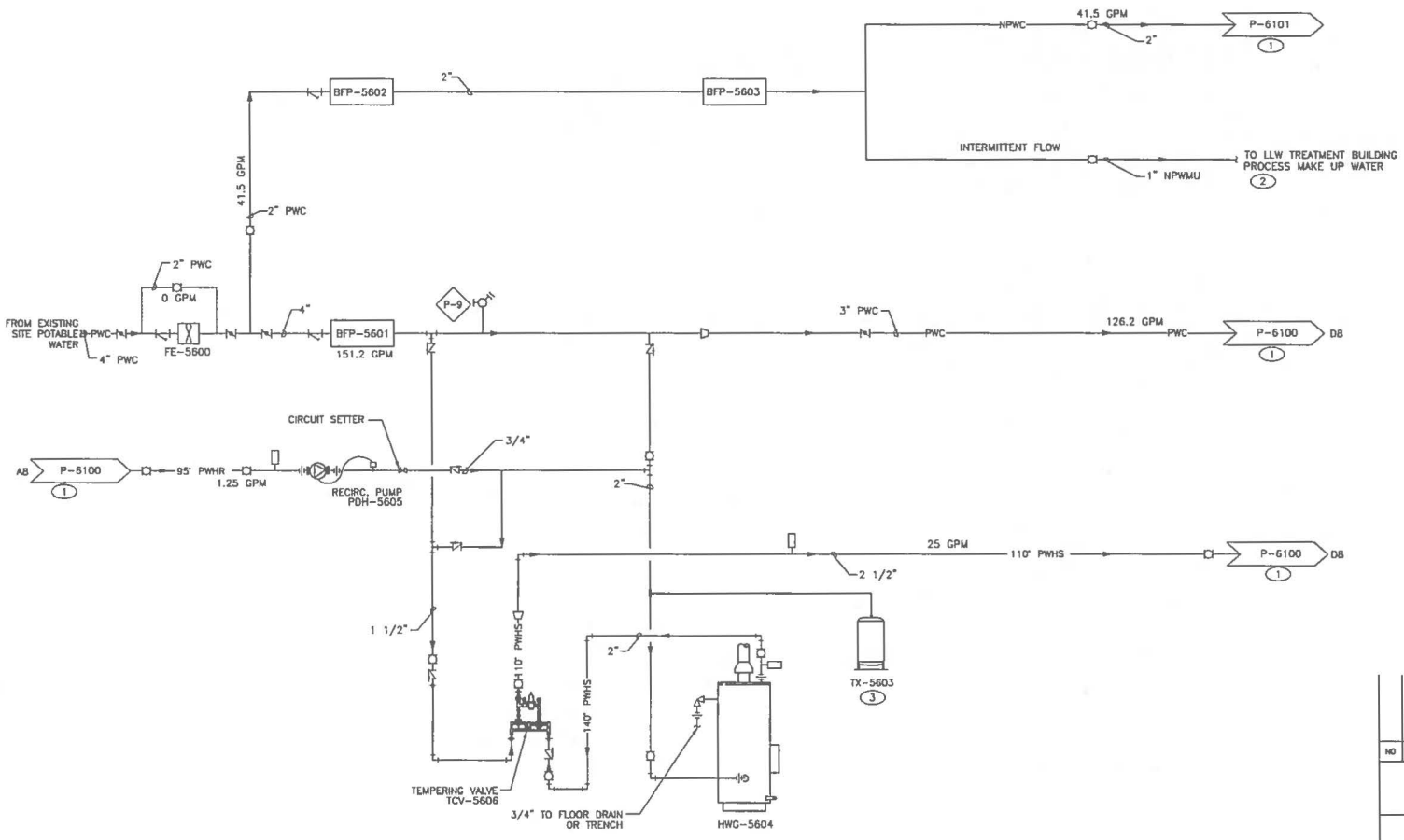

POTABLE/NON-POTABLE WATER FLOW DIAGRAM

SCALE: NONE

"PRIORITY DRAWING"

NO	DATE	CLASS REV	ADC	DESCRIPTION	DWN	DES	CHKD	SUB	APP

AECOM

RLWTF-UP LOW LEVEL WASTE SUBPROJECT

POTABLE & NON-POTABLE WATER FLOW DIAGRAM

BLDG. 251 TA-50

DRAWN	V DAWSON
DESIGN	B SHREVE
CHECKED	C MOYERS
DATE	5/8/14

SUBMITTED MANNY TARIN

APPROVED FOR RELEASE ED ARTIGLIA

Los Alamos NATIONAL LABORATORY PO Box 1663 Los Alamos, New Mexico 87545

SHEET	P-6203
	57 OF 118
CLASSIFICATION	
REVIEWER	
DATE	
PROJECT ID	100761
DRAWING NO	C55865
REV	0

CHARLES MOYERS NEW MEXICO 10839 REGISTERED PROFESSIONAL ENGINEER 05-08-14

File Location: P:\RLWTF LOW-LEVEL WASTE FACILITY\300 CAD\C55865 CUR\SHEETS\13 PLUMBING\C55865-P-6203-R0.DWG
Plotted By: DAWSON, VANESSA Plot Date: Friday, May 02, 2014

21521

GENERAL NOTES

1. SEE SHEETS P-7200 AND P-7201 FOR PLUMBING EQUIPMENT LIST.
2. SEE SHEETS P-0201 THRU P-0203 FOR GENERAL PLUMBING NOTES, LEGEND AND ABBREVIATIONS.

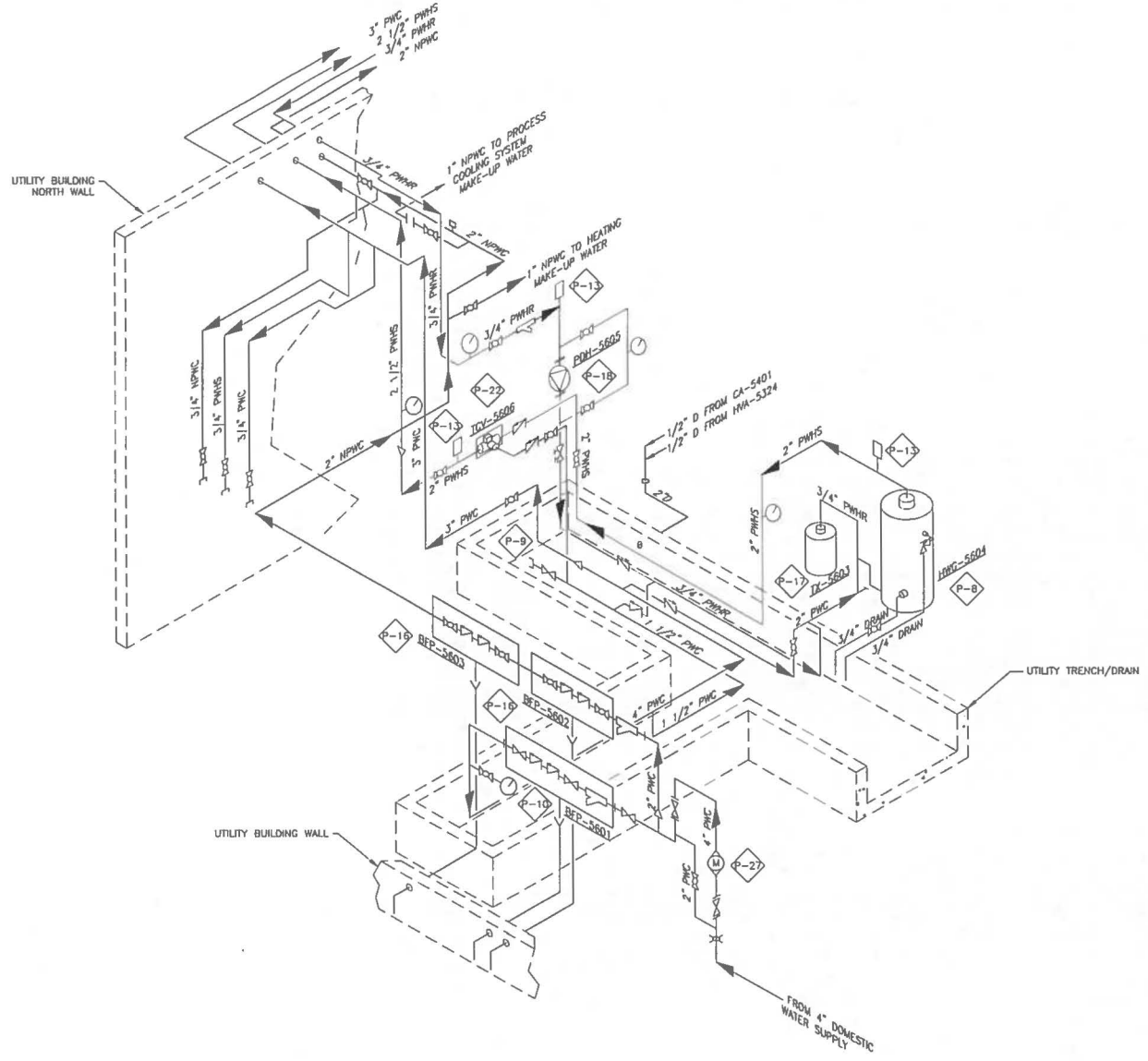

POTABLE/NON-POTABLE WATER RISER DIAGRAM
SCALE: NONE

NO	DATE	CLASS REV	ADC	DESCRIPTION	DWN	DES	CHKD	SUB	APP

AECOM

RLWTF-UP LOW LEVEL WASTE SUBPROJECT

POTABLE/NON-POTABLE WATER RISER DIAGRAM

BLDG. 251 TA-50

DRAWN	V DAVISON
DESIGN	B SHREEVE
CHECKED	C MOYERS
DATE	5/8/14

SUBMITTED MANNY TARIN

APPROVED FOR RELEASE ED ARTIGLIA

Los Alamos NATIONAL LABORATORY PO Box 1663 Los Alamos, New Mexico 87545

SHEET P-6204

58 OF 118

CLASSIFICATION | REVIEWER | DATE

PROJECT ID 100761 | DRAWING NO C55865 | REV 0

05-08-14

File Location: P:\RLWTF LOW-LEVEL WASTE FACILITY\500 CAD\C55865 CUB\SHEETS\13 PLUMBING\55865-P-6204-R0.DWG
Plotted By: DAVISON, VANESSA; Plot Date: Friday, May 02, 2014

: 12543

PLUMBING FIXTURE/EQUIPMENT LIST

ITEM NO.	LOCATION ROOM NO.	NO. REQUIRED	SYMBOL	DESCRIPTION	ROUGH-IN-SIZE WASTE	VENT	PWC	NPWC	PWH	REMARKS	FURNISHED BY
P-8	LLW UTILITY BUILDING	1	P-8	WATER HEATER, HWG-5604	–	–	2"	–	2"	COMPLY WITH ANSI Z21.10.3/CSA 4.3; ASME CODE STORAGE TANK, 150 PSIG WORKING PRESSURE, COMPLY WITH NFS 61; 225 GALLON CAPACITY, RECOVERY OF 800 GPH AT 100 DEG F TEMPERATURE RISE, FUEL GAS INPUT 800,000 BTU/H, 6.0 IN W. C. GAS PRESSURE, 120 VOLT, SINGLE PHASE, 60 HZ. (SEE SPECIFICATION SECTION 22 3700)	SUBCONTRACTOR
P-10	LLW UTILITY BUILDING	1	P-10	BACKFLOW PREVENTER	–	–	4"	–	–	REDUCED PRESSURE-TYPE, CAST IRON BODY EPOXY-COATED INTERNAL; SHUT OFF VALVES; FLANGED ENDS; 175 PSI WORKING PRESSURE. (SEE SPECIFICATION SECTION 22 1100)	SUBCONTRACTOR
P-11	LLW UTILITY BUILDING	1	P-11	FLOOR DRAIN	2"	–	–	–	–	ASME A112.6.3, 2 IN. DIAMETER DRAIN, CAST-IRON GRATE, DOUBLE-DRAINAGE FLANGE, REVERSIBLE-CLAMPING COLLAR, ADJUSTABLE NICKEL-BRONZE STRAINER. (SEE SPECIFICATION SECTION 22 1316)	SUBCONTRACTOR
P-13	LLW UTILITY BUILDING	3	P-13	HAMMER ARRESTER	–	–	1/2"	–	–	COMPLY WITH ASSE 1010, OR PDI-WH 201; COPPER BODY WITH BRASS MALE PIPE THREADED INLET, PRECHARGED AND SEALED AT THE FACTORY	SUBCONTRACTOR
P-16	LLW UTILITY BUILDING	2	P-16	BACKFLOW PREVENTER	–	–	–	2"	–	REDUCE PRESSURE-TYPE, BRONZE BODY WITH BALL-TYPE SHUTOFF VALVES, FEMALE NATIONAL PIPE THREAD; 175 PSI WORKING PRESSURE. (SEE SPECIFICATION SECTION 22 1100)	SUBCONTRACTOR
P-17	LLW UTILITY BUILDING	1	P-17	EXPANSION TANK, TX-5603	–	–	–	–	–	MANUFACTURER: AMTROL, MODEL NUMBER: ST-80VC, TANK VOLUME: 58 (GAL), ACCEPTANCE VOLUME: 34 (GAL); ASME VIII DIV I U STAMPED, NBIC NUMBERED AND REGISTERED	SUBCONTRACTOR
P-18	LLW UTILITY BUILDING	1	P-18	RECIRCULATING PUMP, PDH-5605	–	–	–	–	–	BRONZE BODY, BRASS IMPELLER, STEEL SHAFT; 125 PSI WORKING PRESSURE, 1.25 GPM @ 33 FT HEAD; 92 WATTS, 0.80 FLA, 115 VOLT, 1 PHASE, 60 HZ.; AUTOMATIC TIMER KIT; AUQUASTAT TO FIT 1/2 INCH PIPE.(SEE SPECIFICATION SECTION 22 1100)	SUBCONTRACTOR
P-22	LLW UTILITY BUILDING	1	P-22	TEMPERATURE CONTROL VALVE, TCV-5606	–	–	1-1/2"	–	2"	ASSE 1017 AND IAPMO UPC LISTED; 125 PSIG OPERATING PRESSURE, 200 DEGREE F WATER TEMP, TEMPERATURE ADJUSTMENT RANGE 90 – 180 DEGREE F.WATTS REGULATOR N170, 2" VALVE SIZE, SET AT 110 DEGREES F	SUBCONTRACTOR
P-27	LLW UTILITY BUILDING	1	P-27	WATER METER	–	–	4"	–	–	MANUFACTURER: NEPTUNE, MODEL: HP TURBINE, DATA: PRO READ WITH STRAINER	SUBCONTRACTOR

NO	DATE	CLASS REV	ADC	DESCRIPTION	DWN	DES	CHKD	SUB	APP

AECOM

RLWTF-UP LOW LEVEL WASTE SUBPROJECT

PLUMBING EQUIPMENT LIST

BLDG. 251 TA-50

DRAWN	V DAVISON
DESIGN	B SHREEVE
CHECKED	C MOYERS
DATE	5/8/14

SUBMITTED MANNY TARIN

APPROVED FOR RELEASE ED ARTIGLIA

Los Alamos NATIONAL LABORATORY PO Box 1663 Los Alamos, New Mexico 87545

SHEET P-7200

59 OF 118

CLASSIFICATION | REVIEWER | DATE

PROJECT ID 100761 | DRAWING NO C55865 | REV 0

CHARLES MOYERS NEW MEXICO 18839 LICENSED PROFESSIONAL ENGINEER

05-08-14

File Location: P:\RLWTF LOW-LEVEL WASTE FACILITY\500 CAD\C55865 CUB\SHEETS\13 PLUMBING\55865-P-7200-R0.DWG
Plotted By: DAVISON, VANESSA; Plot Date: Friday, May 02, 2014

12544

PLUMBING EQUIPMENT LIST

ITEM NO.	LOCATION ROOM NO.	NO. REQUIRED	DESCRIPTION, MANUFACTURER OR APPROVED EQUAL — ALL EQUIPMENT SIZED FOR OPERATION AT 7500 FT. ELEVATION	FURNISHED BY
P-30	LLW UTILITY BUILDING	1	AIR COMPRESSOR, (TCA-5401) MANUFACTURER: KAESER — MODEL: SK 20 AIR CENTER — CAPACITY: 178 SCFM AT 125 PSIG — COMPRESSOR TYPE: ROTARY SCREW — COMPRESSORS: DUPLEX — RECEIVER GAL: (2) 100 — RECEIVER TANK: HORIZONTAL — HP: 20 EA. — VOLTAGE: 460 — PHASE: 3 — HZ: 60 — RLA: 58 — AIR DRYER: REFRIGERATED	SUBCONTRACTOR
P-31	OUTDOORS	1	NATURAL GAS PRESSURE REGULATOR, (PRV-5805) SEE DRAWING C55865 SHEET P-6200 UNIT NO.: PCV-5805 — MANUFACTURER: FISHER CONTROLS — MODEL: 627R — FLUID: NATURAL GAS — CAPACITY: INLET PRESSURE 60 PSIG, OUTLET PRESSURE 20 PSIG, MIN FLOW CFH 4750 — ORIFICE SIZE: 1/4" — MAX INLET PRESSURE: 175 PSIG — PIPE SIZE: 2" — CONNECTION: NPT — REMARKS: MUST MEET ASME B31.8 49CFR192 — SPRING PART NUMBER/COLOR CODE: 10B3076X012/YELLOW	SUBCONTRACTOR
P-32	OUTDOORS	1	NATURAL GAS SEISMIC SHUT-OFF VALVE, (V-5810) SEE DRAWING C55865 SHEET P-6200 UNIT NO.: V-5810 — MANUFACTURER: PACIFIC SEISMIC PRODUCTS — MODEL: 313 — FLUID: NATURAL GAS — MAX WORKING PRESSURE: 60 PSIG — NOMINAL PIPE SIZE: 2" — CONNECTION: NPT — AMBIENT TEMP: -40 TO 150 °F — ACCESSORIES: UL-LISTED, ASCE 25-97 — REMARKS: MUST MEET ASME B31.8 49CFR192	SUBCONTRACTOR
P-33	OUTDOORS	1	NATURAL GAS PRESSURE REGULATOR, (PRV-5808) SEE DRAWING C55865 SHEET P-6200 UNIT NO.: PCV-5808 — MANUFACTURER: FISHER CONTROLS — MODEL: CS800IQ, DUCTILE IRON — FLUID: NATURAL GAS — INLET PRESSURE: 20 PSIG — OUTLET PRESSURE: 14" WC — MIN FLOW CFH: 4700 — ORIFICE SIZE: 3/8" — PIPE SIZE: 2" — CONNECTION: NPT — REMARKS: MUST MEET ASME B31.8 49CFR192 — SPRING PART NUMBER/COLOR CODE: GE30340X012/WHITE	SUBCONTRACTOR
P-34	OUTDOORS	1	NATURAL GAS VALVE UNIT NO.: V-5801 — MANUFACTURER: BALON — MODEL: SERIES 5 — WORKING PRESSURE: 1000 PSIG — PIPE SIZE: 2" — REMARKS: MUST MEET ASME B31.8 49CFR192	SUBCONTRACTOR
P-35	OUTDOORS	1	NATURAL GAS VALVE UNIT NO.: V-5818 — MANUFACTURER: A.Y. McDONALD — MODEL: SERIES 10885B — WORKING PRESSURE: 100 PSIG — PIPE SIZE: 2"	SUBCONTRACTOR
P-36	LLW UTILITY BUILDING	1	NATURAL GAS FLOW METER UNIT NO.: FE-5811 — MANUFACTURER: FOX THERMAL INSTRUMENTS, INC. — MODEL: FT3 IN-LINE — CONNECTION: 150LB FLG — PIPE SIZE: 3"	SUBCONTRACTOR
P-37	OUTDOORS	1	NATURAL GAS SHUT-OFF VALVE UNIT NO.: MOV-5810 — MANUFACTURER: MAXON — MODEL: 300SMA12AA11BB11BONATR — FLUID: NATURAL GAS — FAIL POSITION: CLOSE — CONNECTION: FNPTxFNPT — SIZE: 3" — ELECTRICAL: SOLENOID,115VAC, 23 VA; MOTOR, 115V, 60 HZ, 196 VA	SUBCONTRACTOR
P-38	OUTDOORS	1	OVER PRESSURE/UNDER PRESSURE SHUT OFF VALVE UNIT NO.: V-5808 — MANUFACTURER: EMERSON — MODEL: TYPE OSE — FLUID: NATURAL GAS — FAIL POSITION: CLOSE — CONNECTION: FNPTxFNPT — SIZE: 2" — OVER PRESSURE SET POINT: 12' WC — UNDER PRESSURE SET POINT: 6' WC — REMARKS: MUST MEET ASME B31.8 49CFR192	SUBCONTRACTOR
P-39	LLW UTILITY BUILDING	1	OIL/WATER SEPARATOR UNIT NO.: F-5401 — MANUFACTURER: KAESER COMPRESSORS — MODEL: KCF-100 — CONNECTION: HOSE BARB — PIPE SIZE: 1/2"	SUBCONTRACTOR

NO	DATE	CLASS REV	ADC	DESCRIPTION	DWN	DES	CHKD	SUB	APP

AECOM

RLWTF-UP LOW LEVEL WASTE SUBPROJECT

PLUMBING EQUIPMENT LIST

BLDG. 251 TA-50

DRAWN: V DAVISON
DESIGN: B SHREEVE
CHECKED: C MOYERS
DATE: 5/8/14

SUBMITTED: MANNY TARIN
APPROVED FOR RELEASE: ED ARTERLIA

Los Alamos NATIONAL LABORATORY — PO Box 1663, Los Alamos, New Mexico 87545

SHEET: P-7201
60 OF 118

CLASSIFICATION | REVIEWER | DATE

PROJECT ID: 100761
DRAWING NO: C55865
REV: 0

CHARLES MOYERS — NEW MEXICO — 15838 — REGISTERED PROFESSIONAL ENGINEER
03-07-14

File Location: P:_TECHNOLOGY\60228531 - RLWTF\100 STUDIES, DESIGN\100 DESIGN SUBMISSIONS\161 CONCEPT DESIGN\DEL 8.5-6-14 FINAL\DEL DI DRAWINGS\251-LLW UTILITY BUILDING\BLDG 251 CAD FILES\251-PLUMBING\55865-P-7201-PEQ.DWG
Plotted By: MIKEL MAHER; Plot Date: Thursday, May 22, 2014

12515

MECHANICAL SYMBOL LEGEND

(ALL ABBREVIATIONS SHOWN ARE NOT NECESSARILY USED ON THE DRAWINGS)

(ALL SYMBOLS SHOWN ARE NOT NECESSARILY USED ON THE DRAWINGS)

ABBREVIATIONS

AFF	ABOVE FINISHED FLOOR
AFG	ABOVE FINISHED GRADE
AD	ACCESS DOOR
AI	ANALOG INPUT
AL	ACOUSTIC LINING
AC	AIR CONDITIONING
AO	ANALOG OUTPUT
AHU	AIR HANDLING UNIT
AR	ARGON
AV	ANALOG VALUE
BAS	BUILDING AUTOMATION SYSTMEM
BC	BOLT CIRCLE
BDD	BACKDRAFT DAMPER
BOD	BOTTOM OF DUCT
BOP	BOTTOM OF PIPE
BHP	BRAKE HORSEPOWER
BTUH	BTU PER HOUR
BI	BINARY INPUT
BO	BINARY OUTPUT
BP	BUILDING PRESSURE
BV	BINARY VALUE
C	COMMON
CAM	CONTINUOUS AIR MONITORING
CAV	CONSTANT AIR VOLUME
CFM	CUBIC FEET PER MINUTE
CO	CLEANOUT
COND	CONDENSATE
CONT.	CONTINUATION
CS	CARBON STEEL
CU	COPPER
D	DRAIN
DMP	DAMPER
DX	DIRECT EXPANSION
EL	ELBOW, ELEVATION
EP	ELECTRIC-PNEUMATIC
EXH	EXHAUST
EXV	EXHAUST VALVE
°F	DEGREES FAHRENHEIT
FACP	FIRE ALARM CONTROL PANEL
FT.	FEET
FPM	FEET PER MINUTE
F.G.	FILTER GAUGE
FH	FUME HOOD
FOB	FLAT ON BOTTOM
FOT	FLAT ON TOP
FLEX	FLEXIBLE
FC	FLEXIBLE CONNECTOR
FCS	FACILITY CONTROL SYSTEM
FD	FLOOR DRAIN, FIRE DAMPER
FE	FAN EXHAUST
GPH	GALLONS PER HOUR
GPM	GALLONS PER MINUTE
GFE	GOVERNMENT FURNISHED EQUIPMENT
GA	GAGE
GL	GLYCOL
HGT	HEIGHT
HD	HEAD, HUB DRAIN
	HEAT DETECTOR
HEPA	HIGH EFFICIENCY PARTICULATE AIR
HFM	HAND AND FOOT MONITOR
HCL	HEATING COIL
HOA	HAND-OFF-AUTOMATIC
HP	HORSEPOWER
HTG	HEATING
HTR	HEATER
HVAC	HEATING, VENTILATING AND AIR CONDITIONING
HW	HOT WATER
HYD	HYDRANT
HZ	HERTZ
IN	INCHES
I.D.	INNER DIAMETER
IRI	INDUSTRIAL RISK INSURERS
KW	KILOWATT
KWH	KILOWATT HOUR
LV	LOUVER
MA	MIXED AIR
MAX	MAXIMUM
MIN	MINIMUM
MOV	MOTOR OPERATED VALVE
MS	MOTOR STARTER
NA	NOT APPLICABLE
NC	NORMALLY CLOSED
NO.	NUMBER (QUANTITY)
NO	NORMALLY OPEN
NPW	NON-POTABLE WATER
OBD	OPPOSED BLADE DAMPER
OA	OUTSIDE AIR
O.C.	ON CENTER
O.D.	OUTER DIAMETER
OHM	OCCUPATIONAL HEALTH MONITORING
P&ID	PIPING AND INSTRUMENTATION DIAGRAM
PCM	PERSONAL CONTAMINATION MONITORING
PH	MEASURE OF ACIDITY OR ALKALINITY
PL	PLACES, PLATE
PSIG	POUNDS PER SQUARE INCH GAGE
PRV	PRESSURE REDUCING VALVE
PRV	PRESSURE RELIEF VALVE
QTY	QUANTITY
RLA	RELIEF AIR
RA	RETURN AIR
RA	REFERENCE AIR (NS)
RPM	REVOCUTIONS PER MINUTE
SA	SUPPLY AIR
SD	SMOKE DETECTOR
SIM	SIMILAR
SP	STATIC PRESSURE (INCHES OF WATER)
S.R.	SHORT RADIUS
SST	STAINLESS STEEL TUBING
TYP.	TYPICAL
TBD	TO BE DETERMINED
TCV	TEMPERATURE CONTROL VALVE
TOC	TOP OF CONCRETE
UB	UTILITY BUILDING
VX	VACUUM EXHAUST
VAV	VARIABLE AIR VOLUME
VEL	VELOCITY
VTR	VENT THRU ROOF
V	VOLTS
VAC	VOLTS, ALTERNATING CURRENT
VD	VOLUME DAMPER
WG	WATER GAUGE

EQUIPMENT CODE LISTING

AFTERCOOLER
ACL AFTER COOLER

AIR DRYER
DAD DESICCANT AIR DRYER
DAR REFRIGERANT AIR DRYER

AIR WASHER
WA AIR WASHER

BACKFLOW PREVENTER
BFP BACKFLOW PREVENTER

BASEBOARD HEATER
BDW BASEBOARD HEATER, HOT WATER
BDE BASEBOARD HEATER, ELECTRIC

BOILERS
BHW HOT WATER BOILER (HEATING)
BS STEAM BOILER (HEATING)
BWS HOT WATER SUPPLY BOILER (POTABLE/NOT-POTABLE)

EQUIPMENT CODE LISTING (CONT.)

CHILLERS
CWA ABSORPTION WATER CHILLER
CWR REFRIGERANT WATER CHILLER

COMPRESSORS
CA AIR COMPRESSOR
CR REFRIGERANT COMPRESSOR

CONDENSING UNIT (W/REFRIGERANT COMPRESSORS)
RUA REFRIGERANT AIR COOLED CONDENSING UNIT

DEHUMIDIFIER
DHM DEHUMIDIFIER

FANS
FB FAN BOOSTER
FE EXHAUST AIR FAN
FRA RETURN AIR FAN
FS SUPPLY AIR FAN

FILTERS (AIR)
FAB REPLACEMENT AIR FILTER (6" DEEP AND LARGER)
FAC CLEANABLE AIR FILTER (PERMANENT TYPE)
FAH HEPA FILTER
FAL CARBON/CHARCOAL AIR FILTER
FAP EVAPORATIVE COOLER PAD
FAR REPLACEMENT AIR FILTER (UP TO 4" DEEP)
FES ELECTROSTATIC AIR FILTER
FT FILTER TRAIN

GENERATORS
GDE DIESEL ENGINE GENERATOR
GGE GASOLINE ENGINE GENERATOR
GNE NATURAL GAS ENGINE GENERATOR
GNS STEAM DRIVEN GENERATOR

HEATERS (UNIT/SPACE WITH FANS)
HUG GAS HEATER
HUE ELECTRIC HEATER
HUI RADIANT (INFRARED) HEATER
HUS STEAM HEATER
HUW HOT WATER HEATER

HEAT EXCHANGERS
HXG HEAT EXCHANGER, WATER/GLYCOL TO AIR
HXO HEAT EXCHANGER, OIL TO WATER
HXS HEAT EXCHANGER, STEAM TO WATER
HXW HEAT EXCHANGER, WATER TO WATER
HXR HEAT EXCHANGER, REFRIGERANT

HUMIDIFIERS
HAS AIR HUMIDIFIER, STEAM SPRAY
HAW AIR HUMIDIFIER, WATER SPRAY

HVAC UNITS
ACR REFRIGERANT AIR CONDITIONING UNIT (DX COOLING ONLY)
CAE EVAPORATIVE AIR COOLER
CAV CONSTANT AIR VOLUME UNIT
CAW CHILLED WATER AIR CONDITIONING UNIT (COOLING ONLY)
HRC HEAT RECOVERY COIL
HV HEATING AND VENTILATING UNIT
HVA HEATING, VENTILATING, AND AIR CONDITIONING UNIT
VAV VARIABLE AIR VOLUME UNIT

PUMPS
PA ACID PUMP (CAUSTIC, CHEMICAL, ETC.)
PBF BOILER FEED PUMP
PC CONDENSATE PUMP (ALL TYPES)
PCT COOLING TOWER PUMP
PCW CHILLED WATER PUMP
PDH HOT WATER PUMP (POTABLE)
PDW DEIONIZED WATER PUMP
PHW HOT WATER HEATING PUMP
PF FIRE PUMP
PS SUMP PUMP (REGARDLESS OF USE)
PSR RAW SEWAGE PUMP
PV VACUUM PUMP
PWS WATER SPRAY PUMP
PWT WASTE TREATMENT PUMP

SCREENS
SF SCREEN, FIRE

TANKS
TCI TANK, CHEMICAL INJECTION
TCA COMPRESSED AIR TANK
THW HOT WATER STORAGE TANK
TSA TANK, SEPARATOR, AIR
TX EXPANSION TANK

VALVES
VM MOTORIZED VALVE
EAV EXHAUST AIR VALVE
SAV SUPPLY AIR VALVE
TCV TEMPERATURE CONTROL VALVE

WATER HEATERS
HWE ELECTRIC WATER HEATER
HWG GAS WATER HEATER

WATER PRESSURE REGULATORS
RPW WATER PRESSURE REGULATOR

PIPING SYMBOLS

SYMBOL	DESCRIPTION
	BALL VALVE
	BUTTERFLY VALVE
	CHECK VALVE
	CONTROL VALVE (TWO WAY)
	CONTROL VALVE (3-WAY)
	DIAPHRAGM VALVE
	GATE VALVE
	GATE VALVE (ANGLE)
	GATE VALVE (OS & Y)
	GLOBE VALVE
	GLOBE VALVE (ANGLE)
	HOSE BIBB W/VAC BREAKER
	NEEDLE VALVE
	PLUG VALVE COCK
	PRESSURE REDUCING VALVE
	RELIEF OR SAFETY VALVE
	SOLENOID VALVE
	AUTOMATIC AIR VENT
	MANUAL AIR VENT
	EXPANSION JOINT
	EXPANSION LOOP
	FLEXIBLE PIPE CONNECTION
	PIPE ANCHOR
	PRESSURE GAUGE WITH VALVE
	STEAM TRAP
	STRAINER
	STRAINER W/BLOW-OFF VALVE
	THERMOMETER
	PETE'S PLUG (PRESS/TEMP)
	TEMP GAUGE WITH VALVE
	CAP OR PLUG
	FLEXIBLE MECHANICAL COUPLING
	RIGID MECHANICAL COUPLING
	ELBOW - TURNED UP
	ELBOW - TURNED DOWN
	FLANGE CONNECTION
	REDUCER - CONCENTRIC
	REDUCER - ECCENTRIC - BOTTOM OF PIPE LEVEL
	REDUCER - ECCENTRIC - TOP OF PIPE LEVEL
	TEE - OUTLET UP
	TEE - OUTLET DOWN
	UNION
	END OF PIPE
	DIRECTION OF FLOW
	PITCH PIPING DOWN
	FLOW INDICATOR
	SIGHT GLASS
	PRESSURE GAUGE
	FLOOR DRAIN
	FLOOR DRAIN
	MAINTENANCE ACCESS
SD	SMOKE DETECTOR

PIPING SYMBOLS/LINE TYPE

RFND	REFRIGERANT DISCHARGE (HOT GAS)
RFNL	REFRIGERANT LIQUID
RFNR	REFRIGERANT RELIEF
RFNS	REFRIGERANT SUCTION
PWC	POTABLE WATER-COLD
PWH	POTABLE HOT WATER
PWHS	POTABLE HOT WATER SUPPLY
PWHR	POTABLE HOT WATER RETURN
D	DRAIN
CWR	CHILLED WATER RETURN
CWS	CHILLED WATER SUPPLY
HRR	HEAT RECOVERY RETURN
HRS	HEAT RECOVERY SUPPLY
HWR	HEATING WATER RETURN
HWS	HEATING WATER SUPPLY
PCWR	PROCESS COOLING WATER RETURN
PCWS	PROCESS COOLING WATER SUPPLY
ICW	INDUSTRIAL COLD WATER
CS	CHEMICAL SUPPLY
NPWMU	NON-POTABLE WATER-MAKEUP
NPHWS	NON-POTABLE HOT WATER SUPPLY
NPHWR	NON-POTABLE HOT WATER RETURN
CONLP	CONDENSATE LOW PRESSURE
CONHP	CONDENSATE HIGH PRESSURE
HGBP	HOT GAS BYPASS
RFP	PRESSURE RELIEF

DUCTWORK SYMBOLS

- DIRECTION OF FLOW
- ACOUSTICAL DUCT LINING
- 12"X20" — INSIDE DUCT SIZE (FIRST FIGURE IS SIDE SHOWN)
- SUPPLY DUCT SECTION, DOWN
- RETURN DUCT SECTION, DOWN
- SUPPLY DUCT SECTION, UP
- RETURN DUCT SECTION, UP
- EXHAUST DUCT SECTION, UP
- FLEXIBLE DUCT
- TURNING VANES
- INCLINED * RISE (R) * DROP (D)
- DAMPER ** AD-AUTOMATIC DAMPER ** BDD-BACKDRAFT DAMPER ** FD-FIRE DAMPER ** MOD-MOTOR OPERATED DAMPER ** FSD-FIRE SMOKE DAMPER ** VD-MANUAL VOLUME DAMPER
- OR / SIZE_"X_" — ACCESS DOOR IN DUCT
- FIRE DAMPER (NS)
- COMBINATION FIRE/SMOKE DAMPER (FSD) (NS)
- SUPPLY RECTANGULAR CEILING DIFFUSER
- RETURN, RELIEF, OR EXHAUST REGISTER OR GRILLE
- TRANSFER GRILLE

GENERAL NOTES

1. PROVIDE TURNING VANES IN ALL RECTANGULAR ELBOWS.
2. THE CFM OF EACH DIFFUSER, REGISTER, ETC. IS INDICATED AS A NUMBER NEXT TO THE SYMBOL DESIGNATION ON THE DRAWINGS.
3. COORDINATE ALL DUCTWORK AND HVAC PIPING WITH PLUMBING PIPING, FIRE PROTECTION PIPING, STRUCTURAL AND ELECTRICAL SYSTEMS AND PROVIDE NECESSARY OFFSETS TO AVOID CONFLICTS AND TO MAINTAIN EQUIPMENT ACCESS AND SERVICEABILITY.
4. SEAL ALL TRANSVERSE JOINTS, LONGITUDINAL SEAMS, DUCT WALL PENETRATIONS AND FITTING CONNECTIONS ON ALL DUCT SYSTEMS.
5. PROVIDE 2 FT. X 4 FT. CLEARANCE BELOW ALL MECHANICAL ITEMS REQUIRING MAINTENANCE. THESE MECHANICAL ITEMS INCLUDE TERMINAL HEATING COILS, BALANCING DAMPERS, AND VARIABLE AIR VOLUME BOXES.
6. ALL STRUCTURAL WELDED CONNECTIONS SHALL BE PERFORMED IN ACCORDANCE WITH LANL APPROVED WELDING SPECIFICATION AND AWS D1.1/D1.1M SPECIFICATION FOR WELDING STEEL. ALL TUBULAR CONNECTIONS SHAL BE INSPECTED PER AWS D1.1 TABLE 6.1. ALL NON-TUBULAR COMPONENTS SHALL BE INSPECTED AS CYCLICALLY LOADED NON-TUBULAR CONNECTIONS PER AWS D1.1 TABLE 6.1. ALL PIPE WELDED CONNECTIONS SHALL BE PERFORMED IN ACCORDANCE WITH LANL APPROVED WELDING SPECIFICATION AND THE APPLICABLE ASME PRESSURE PIPING CODE IDENTIFIED IN THE CONSTRUCTION SPECIFICATION.
7. DETAILS WITH MISSING WELD INFORMATION (FOR EXAMPLE, SIZE OR NUMBER OF PLACES) SHALL BE PROVIDED ON FABRICATION DRAWINGS FOR APPROVAL PRIOR TO FABRICATION.
8. FOR REFRIGERATION EQUIPMENT, COMPLETE A "REFRIGERATION APPLIANCE/EQUIPMENT INVENTORY FORM" AND SUBMIT TO RRES-MAQ, IN ACCORDANCE WITH LANL PROCEDURE RRES-MAQ-311. FOR DISPOSAL OF EXISTING REFRIGERATION UNITS, FOLLOW LANL PROCEDURE RRES-MAQ-312,R5.
9. FOR FUEL BURNING EQUIPMENT, COMPLETE A "FUEL BURNING APPLIANCE/EQUIPMENT INVENTORY FORM" AND SUBMIT TO ENV-MAQ.

EQUIPMENT SYMBOLS

- 3 — DIAMOND SYMBOL INDICATES EQUIPMENT NUMBER REFERS TO SPECIFIC EQUIPMENT IDENTIFIED IN MECHANICAL EQUIPMENT LIST
- 1 — ELLIPSE SYMBOL INDICATES A KEYED NOTE THE NUMBER REFERS TO A SPECIFIC NOTE LISTED IN THE KEYED NOTE LIST
- NOMINAL FACE DIMENSIONS LISTED ON FLOOR PLAN OR LISTED ON DIFFUSER/GRILLE SCHEDULE.
- 12"x12" / A — LETTER IN SQUARE SYMBOL REFERS TO A SPECIFIC GRILLE OR REGISTER TYPE IDENTIFIED IN THE GRILLE/DIFFUSER SCHEDULE.
- 390 — CFM
- T — TEMPERATURE SENSOR/THERMOSTAT
- POC — POINT OF CONNECTION BETWEEN CURRENT WORK AND EXISTING
- POR — POINT OF REMOVAL BETWEEN CURRENT WORK AND EXISTING
- EXISTING EQUIPMENT TO BE REMOVED
- EXISTING EQUIPMENT TO REMAIN
- EXISTING PIPING TO BE REMOVED
- EXISTING PIPING TO REMAIN
- EQUIPMENT MAINTENANCE CLEARANCE
- CONDENSATE PUMP
- 1 — CIRCLE SYMBOL INDICATES UL LISTED FIRESTOP MATERIALS THE NUMBER REFERS TO A SPECIFIC NOTE LISTED IN EACH FIRESTOPPING DETAIL

NO	DATE	CLASS REV	ADC	DESCRIPTION	DWN	DES	CHKD	SUB	APP

AECOM

RLWTF-UP LOW LEVEL WASTE SUBPROJECT

MECHANICAL SYMBOL LEGEND AND GENERAL NOTES

DRAWN	V DAWSON
DESIGN	B SHREEVE
CHECKED	C MOYERS
DATE	5/8/14

BLDG. 251 TA-50

SUBMITTED MANNY TARIN — APPROVED FOR RELEASE ED ARTIOLA

Los Alamos NATIONAL LABORATORY — PO Box 1663 Los Alamos, New Mexico 87545

SHEET M-0201

61 OF 118

CLASSIFICATION — REVIEWER — DATE

PROJECT ID 100761 — DRAWING NO C55865 — REV 0

CHANCE MOYERS NEW MEXICO 15888 LICENSED PROFESSIONAL ENGINEER 05-08-14

9 of 25

File Location: P:\RLWTF LOW-LEVEL WASTE FACILITY\300 CAD\C55865 CUR\SHEETS\13 MECHANICAL\55865-M-0201-102.DWG
Plotted By: DAWSON, VANESSA Plot Date: Friday, May 02, 2014

PROCESS FLOW DIAGRAMS AND P&ID SYMBOLS (GENERAL INSTRUMENT OR FUNCTION SYMBOLS)

(ALL SYMBOLS SHOWN ARE NOT NECESSARILY USED ON THE DRAWINGS)

SYMBOL	DESCRIPTION
	VALVE
	ANGLE VALVE
	BUTTERFLY VALVE
	BALL VALVE
	3-WAY VALVE
	4-WAY VALVE
	GATE VALVE (OS & Y VALVE)
	DIAPHRAGM VALVE
	PRESSURE RELIEF
	DIAPHRAGM ACTUATOR
	TWO-WAY VALVE, FAIL CLOSED
	TWO-WAY VALVE, FAIL OPEN
	3-WAY VALVE W/DIAPHRAGM ACTUATOR
	4-WAY VALVE W/DIAPHRAGM ACTUATOR
	SPRING-OPPOSED SINGLE-ACTING ACTUATOR
	SPRING-OPPOSED DOUBLE-ACTING ACTUATOR
	ELECTROHYDRAULIC ACTUATOR
	HAND ACTUATOR OR HANDWHEEL
	RESTRICTION ORIFICE IN PROCESS LINE
	RESTRICTION ORIFICE DRILLED IN VALVE OR CIRCUIT SETTER
	FLOW STRAIGHTENING VANE
	DIAPHRAGM PRESSURE-BALANCED
	PRESSURE-REDUCING REGULATOR, SELF-CONTAINED, WITH HANDWHEEL ADJUSTABLE SET POINT
	PRESSURE REDUCING REGULATOR WITH EXTERNAL PRESSURE TAP
	DIFFERENTIAL-PRESSURE-REDUCING REGULATOR WITH INTERNAL AND EXTERNAL TAPS
	BACKPRESSURE REGULATOR, SELF-CONTAINED
	BACKPRESSURE REGULATOR WITH EXTERNAL PRESSURE TAP
PI	PRESSURE-REDUCING REGULATOR WITH INTEGRAL OUTLET PRESSURE RELIEF VALVE, AND OPTIONAL PRESSURE INDICATOR
PI	PRESSURE INDICATOR
	FLOW DIRECTION
	PRESSURE RELIEF OR SAFETY VALVE
	VACUUM RELIEF VALVE
	PRESSURE RELIEF OR SAFETY VALVE, STRAIGHT-THROUGH PATTERN, SPRING- OR WEIGHT-LOADED, OR WITH INTEGRAL PILOT
	RUPTURE DISK OR SAFETY HEAD FOR VACUUM RELIEF

SYMBOL	DESCRIPTION
	RUPTURE DISK OR SAFETY HEAD FOR PRESSURE RELIEF
X	PILOT LIGHT X=COLOR R=RED G=GREEN
	FLEX CONNECTION (RUBBER)
	FLEX CONNECTION (STEEL BRAIDED)
	SINGLE PITOT TUBE OR PITOT VENTURI TUBE
	FLOW METER
	FLOW NOZZLE OR VENTURI
	REDUCER
	SCREWED CAP
	PIPE CAP
	HOSE CONNECTION
	FLANGED CONNECTION (PIPING OR EQUIP)
	FLOW ORIFICE FIXED
	STRAINER WITH VALVE
	Y-STRAINER
	COMPRESSED AIR
	DUCTED AIR FLOW FROM SPACE
	CAPPED AIR DUCT
	SEISMIC SHUT OFF VALVE
	GATE VALVE (OPEN)
	GATE VALVE (CLOSED)
	GLOBE VALVE (OPEN)
	GLOBE VALVE (CLOSED)
	NEEDLE VALVE (OPEN)
	NEEDLE VALVE (CLOSED)
	PLUG VALVE (OPEN)
	PLUG VALVE (CLOSED)
	BALL VALVE (OPEN)
	BALL VALVE (CLOSED)
	CHECK VALVE
	SPRING CHECK VALVE
	ANGLE VALVE (OPEN)
	ANGLE VALVE (CLOSED)
	SAFETY OR RELIEF VALVE (INLET PORT SHOWN CLOSED)
	THREE-WAY VALVE (CLOSED PORT DARKENED)
	FOUR-WAY VALVE (ARROWS INDICATE FLOW DIRECTION)
	BALL-CHECK VALVE
	DUAL PURGE VALVE
	ALARM VALVE
	AIR INTAKE FILTER
	ALARM
	PRESSURE PORT OPEN TO SPACE PRESSURE

SYMBOL	DESCRIPTION
	IN-LINE FILTER
	DOUBLE BASKET STRAINER
	HOSE REEL
	OPEN DRAIN (SHOWN)
XX	XX- DRAIN SYSTEM ANNOTATIONS
	DRAIN (PLAN VIEW)
	CLEANOUT (PLAN VIEW)
	SANITARY VENT
	SILENCER/MUFFLER
	SPACE PENETRATIONS
	FIXED LOUVERS
XX	TRAP XX ANNOTATES FUNCTION
L	LUBRICATOR
	55 GALLON DRUM
	THERMOSTATIC VENT
	SPRINKLER ALARM (WATER MOTOR GONG)
	FLOW ALARM VALVE
	PIPE INSULATION
	COOLING TOWER
	CHILLER
	HORIZONTAL CENTRIFUGAL PUMP
	CENTRIFUGAL FAN WITH VARIABLE INLET VANES
	BLOWER/CENTRIFUGAL FAN
	ROTARY PUMP
	VERTICAL WET PIT PUMP
	PROGRESSIVE CAVITY PUMP
M	SUMP PUMP
	HEATER
	HEAT EXCHANGER
	BUBBLE GAUGE
	TEMPERATURE CONTROL VALVE

SYMBOL	DESCRIPTION
	AXIAL FAN
	AXIAL FAN WITH VARIABLE INLET VANES
	2-STAGE RECIPROCATING AIR COMPRESSOR
	SINGLE STAGE RECIPROCATING AIR COMPRESSOR
	2-STAGE ROTARY SCREW AIR COMPRESSOR
	RECIPROCATING PUMP
	PRESSURE VESSELS, VERTICAL (SHOWN) OR HORIZONTAL (TANKS, RECEIVERS, SEPARATORS, SUMPS ETC.)
	TANK
	HVAC COIL (A) E ELECTRIC HW HEATING WATER DX DIRECT EXPANSION NG INDIRECT GAS FIRED CH CHILLED WATER STM STEAM GL GLYCOL (B) HCL HEATING COIL CCL COOLING COIL HRC HEAT RECOVERY COIL
	UNIT HEATER (A) HW HEATING WATER DX DIRECT EXPANSION STM STEAM (B) HCL HEATING COIL
	PRESSURIZED GAS BOTTLE
	DOUBLE CONTAINMENT TANK
	HUMIDIFIER
	MANUAL BALANCE DAMPER
	MULTI POINT PITOT TUBE ARRAY
NO/NC	DAMPER (NORMALLY OPEN) OR NORMALLY CLOSED
	EVAPORATIVE AIR COOLER
	OPPOSED BLADE DAMPER FOR HVAC EQUIPMENT
	BACKDRAFT DAMPER
	AXIAL FAN
TDV	TRIPLE DUTY VALVE

SYMBOL	DESCRIPTION
	SINGLE DUCT VARIABLE VOLUME BOX
A B	WING TYPE FACE AND BYPASS DAMPER (A) HW HEATING WATER DX DIRECT EXPANSION CH CHILLED WATER STM STEAM GL GLYCOL (B) HCL HEATING COIL CCL COOLING COIL HRC HEAT RECOVERY COIL
	COLLECTION BIN
	CYCLONE SEPARATOR
	FLUID RECOVERY PUMP
	DUAL SERVICE HEAT EXCHANGER
	MULTI BLADE DAMPER
	SINGLE BLADE DAMPER
M	MOTOR
	TEST PORT
	PILOT LIGHT
	SEPARATOR
	MIST ELIMINATOR
HEPA	HEPA FILTER
	CARBON ABSORBER FILTER
	ATMOSPHERIC FILTER

SYMBOL	DESCRIPTION
SD	SUCTION DIFFUSER
	PNEUMATIC-ELECTRIC TRANSDUCER
FT	FLOW TRANSMITTER
TT	TEMPERATURE TRANSMITTER
	BACK FLOW PREVENTER W/PRESSURE REDUCTION
	FIRESCREEN
	PREFILTER
	AIR COMPRESSOR W/TANK
	VACUUM PUMP
XXXX	ROOM NUMBER

NOTE: -▷◁- = NORMALLY OPEN (OPEN CENTER)
-▶◀- = NORMALLY CLOSED (SOLID CENTER)

NO	DATE	CLASS REV	ADC	DESCRIPTION	DWN	DES	CHKD	SUB	APP

AECOM

RLWTF-UP LOW LEVEL WASTE SUBPROJECT

PROCESS FLOW DIAGRAM AND P&ID SYMBOL LEGEND

DRAWN	V DAVISON
DESIGN	B SHREEVE
CHECKED	C MOYERS
DATE	5/8/14

BLDG. 251 TA-50

SUBMITTED MANNY TARIN — APPROVED FOR RELEASE ED ARTIOLA

Los Alamos NATIONAL LABORATORY PO Box 1663 Los Alamos, New Mexico 87545

SHEET M-0202

62 OF 118

CLASSIFICATION | REVIEWER | DATE

PROJECT ID 100761 | DRAWING NO C55865 | REV 0

CHARLES MOYERS NEW MEXICO 16538 REGISTERED PROFESSIONAL ENGINEER 05-07-14

File Location: P:\RLWTF LOW-LEVEL WASTE FACILITY\300 CAD\C55865 CAD\SHEETS\13 MECHANICAL\55865-M-0202-R0.DWG
Plotted By: DAESON, WARREN Plot Date: Friday, May 02, 2014

C55865

PROCESS FLOW AND PIPING AND INSTRUMENTATION DIAGRAM LEGEND

LINE TYPES

(ALL SYMBOLS SHOWN ARE NOT NECESSARILY USED ON THE DRAWINGS)

SYMBOL	DESCRIPTION
———	PROCESS FLOW LINE
———	INSTRUMENT SUPPLY OR CONNECTION TO PROCESS
~·~·~	UNDEFINED SIGNAL
-//-//-	PNEUMATIC SIGNAL
- - - - - -	ELECTRIC SIGNAL
-L-L-	HYDRAULIC SIGNAL
-||-	CAPILLARY TUBE
~\/~\/~	ELECTROMAGNETIC OR SONIC SIGNAL (GUIDED)
∿ ∿	ELECTROMAGNETIC OR SONIC SIGNAL (NOT GUIDED)
-o-o-	INTERNAL SYSTEM LINK (SOFTWARE OR DATA LINK
-o-o-	MECHANICAL LINK
OPTIONAL BINARY (ON-OFF) SYMBOLS	
-//-//-	PNEUMATIC BINARY SIGNAL
-/\/\/\-	ELECTRIC BINARY SIGNAL
-E-E-	ELECTRICAL HEAT TRACING
-S-S-	STEAM HEAT TRACING
XX	FP – FLOOR PENETRATION RP – ROOF PENETRATION WP – WALL PENETRATION SB – SYSTEM BREAK

INSTRUMENT/FUNCTION SYMBOLS

	PRIMARY LOCATION NORMALLY ACCESSIBLE TO OPERATOR	FIELD MOUNTED	AUXILIARY LOCATION NORMALLY ACCESSIBLE TO OPERATOR	AUXILIARY LOCATION NORMALLY INACCESSIBLE TO OPERATOR
DISCRETE INSTRUMENTS	XX / XXX	XX / XXX	XX / XXX	XX / XXX
SHARED DISPLAY, SHARED CONTROL	XX / XXX	XX / XXX	XX / XXX	XX / XXX
COMPUTER FUNCTION	XX / XXX	XX / XXX	XX / XXX	XX / XXX
PROGRAMMABLE LOGIC CONTROL	XX / XXX	XX / XXX	XX / XXX	XX / XXX

XX / XXX FLOW INDICATOR

XX / XXX XX / XXX INSTRUMENTS SHARING COMMON HOUSING

X / XX PANEL MOUNTED PATCHBOARD POINT 12

INSTRUMENTATION IDENTIFICATION TABLE

- J-1 COMPONENT FUNCTION NUMBER
- J-2 COMPONENT SEQUENCE NUMBER
- J-2A COMPONENT SEQUENCE # CONT'D
- J-3 VENDOR DESIGNATION
- J-4 PANEL NUMBER
- J-5 APPLICABLE NOTES
- J-6 SYSTEM ACRONYM
- J-7 ASME TEST SYMBOL FOR TEST ONLY OR TEST PLUS NORMAL USE
- J-8 SET-POINT(S)
- J-9 FUNCTION (SEE INSTRUMENT/FUNCTION SYMBOLS)

NOTE

INSTRUMENTATION FUNCTION IDENTIFIERS (J-1) AND FUNCTION SYMBOLS PER ANSI/ISA S5.1.

VALVE & INSTRUMENTATION FUNCTION IDENTIFIERS (SELECTED)

FIRST-LETTERS	INITIATING, MEASURED, OR CONTROLLED VARIABLE	CONTROLLERS: RECORDING	CONTROLLERS: INDICATING	CONTROLLERS: BLIND	VALVES	READOUT DEVICE: RECORDING	READOUT DEVICE: INDICATING	SWITCHES AND ALARM DEVICES *: HIGH**	SWITCHES AND ALARM DEVICES *: LOW	SWITCHES AND ALARM DEVICES *: COMB	TRANSMITTERS: RECORDING	TRANSMITTERS: INDICATING	TRANSMITTERS: BLIND	SOLENOIDS, RELAYS, COMPUTING DEVICES	PRIMARY ELEMENT	TEST POINT	WELL OR PROBE	VIEWING DEVICE, GLASS	SAFETY DEVICE	FINAL ELEMENT
A	ANALYSIS	ARC	AIC	AC		AR	AI	ASH	ASL	ASHL	ART	AIT	AT	AY	AE	AP	AW			AV
B	BURNER/ COMBUSTION	BRC	BIC	BC		BR	BI	BSH	BSL	BSHL	BRT	BIT	BT	BY	BE		BW	BG		BZ
C	CONDUCTIVITY		CIC	CC										CCD	CE					
D	USER'S CHOICE																			
E	VOLTAGE	ERC	EIC	EC		ER	EI	ESH	ESL	ESHL	ERT	EIT	ET	EY	EE					EZ
F	FLOW RATE	FRC	FIC	FC	FCV FICV	FR	FI	FSH	FSL	FSHL	FRT	FIT	FT	FY	FE	FP		FG		FV
FQ	FLOW QUANTITY	FQRC	FQIC			FQR	FQI	FQSH	FQSL			FQIT	FQT	FQY	FQE					FQV
FF	FLOW RATIO	FFRC	FFIC	FFC		FFR	FFI	FFSH	FFSL						FE					FFV
G	USER'S CHOICE																			
H	HAND		HIC	HC	HV					HS										HV
I	CURRENT	IRC	IIC			IR	II	ISH	ISL	ISHL	IRT	IIT	IT	IY	IE					IZ
J	POWER	JRC	JIC	ARC		JR	JI	JSH	JSL	JSHL	JRT	JIT	JT	JY	JE					JV
K	TIME	KRC	KIC	KC	KCV	KR	KI	KSH	KSL	KSHL	KRT	KIT	KT	KY	KE					KV
L	LEVEL	LRC	LIC	LC	LCV	LR	LI	LSH	LSL	LSHL	LRT	LIT	LT	LY	LE		LW	LG		LV
M	MOISTURE/ HUMIDITY						MI						MT							
N	USER'S CHOICE																			
O	USER'S CHOICE																			
P	PRESSURE VACUUM	PRC	PIC	PC	PCV	PR	PI	PSH	PSL	PSHL	PRT	PIT	PT	PY	PE	PTP			PSV PSE	PV
PD	PRESSURE DIFFERENTIAL	PDRC	PDIC	PDC	PDCV	PDR	PDI	PDSH	PDSL		PDRT	PDIT	PDT	PDY	PE	PTP				PDV
Q	QUANTITY	QRC	QIC			QR	QI	QSH	QSL	QSHL	QRT	QIT	QT	QY	QE					QZ
R	RADIATION	RRC	RIC	RC		RR	RI	RSH	RSL	RSHL	RRT	RIT	RT	RY	RE		RW			RZ
S	SPEED	SRC	SIC	SC	SCV	SR	SI	SSH	SSL	SSHL	SRT	SIT	ST	SY	SE					SV
T	TEMPERATURE	TRC	TIC	TC	TCV	TR	TI	TSH	TSL	TSHL	TRT	TIT	TT	TY	TE	TP	TW		TSE	TV
T	TEMPERATURE DIFFERENTIAL	TDRC	TDIC	TDC	TDCV	TDR	TDI	TDSH	TDSL		TDRT	TDIT	TDT	TDY	TDE	TDP TP	TDW TW			TDV
U	MULTIVARIABLE					UR	UI							UY						UV
V	MACHINERY VIBRATION ANALYSIS					VR	VI	VSH VS	VSL	VSHL	VRT	VIT	VT	VY	VE					VZ
W	WEIGHT FORCE	WRC	WIC	WC	WCV	WR	WI	WSH	WSL	WSHL	WRT	WIT	WT	WY	WE					WZ
WD	WEIGHT FORCE DIFFERENTIAL	WDRC	WDIC	WDC	WDCV	WDR	WDI	WDSH	WDSL		WDRT	WDIT	WDT	WDY	WDE					WDZ
X	USER'S CHOICE																			
Y	EVENT STATE PRESENCE		YIC	YC		YR	YI	YSH	YSL				YT	YY	YE					YZ
Z	POSITION DIMENSION	ZRC	ZIC	ZC	ZCV	ZR	ZI	ZSH	ZSL	ZSHL	ZRT	ZIT	ZT	ZY	ZE					ZV
ZD	GAUGING DEVIATION	ZDRC	ZDIC	ZDC	ZDCV	ZDR	ZDI	ZDSH	ZDSL		ZDRT	ZDIT	ZDT	ZDY	ZDE					ZDV

NOTE:
THIS TABLE IS NOT ALL-INCLUSIVE.

* A, ALARM, THE ANNUNCIATING DEVICE, MAY BE USED IN THE SAME FASHION AS S, SWITCH, THE ACTING DEVICE.

** THE LETTERS H AND L MAY BE OMITTED IN THE UNDEFINED CASE.

OTHER POSSIBLE COMBINATIONS:

FO	(RESTRICTION ORIFICE)	PFR	(RATIO)
FRK, HIK	(CONTROL STATIONS)	KQI	(RUNNING TIME INDICATOR)
FX	(ACCESSORIES)	QQI	(INDICATING COUNTER)
TJR	(SCANNING RECORDER)	WKIC	(RATE-OF-WEIGHT-LOSS CONTROLLER)
LLH	(PILOT LIGHT)	HMS	(HAND MOMENTARY SWITCH)

(ALL SYMBOLS SHOWN ARE NOT NECESSARILY USED ON THE DRAWINGS)

INSTRUMENT/FUNCTION SYMBOLS

SYMBOL	DESCRIPTION
X	P = PURGE OR FLUSHING DEVICE R = RESET FOR LATCH-TYPE ACTUATOR
X	S = SOLENOID D = DIGITAL P = PILOT T = TRAP M = MAGNETIC FLOWMETER SP = SET POINT
√	ROOT EXTRACTION
±	BIAS
X	MULTIPLY
>	HIGH SELECTING
<	LOW SELECTING
↑	HIGH LIMITING
↓	LOW LIMITING
K	PROPORTIONAL
-K	REVERSE PROPORTIONAL
+	SUMMING
÷	DIVIDING
CA-1	EQUIPMENT TAG

PLAN BREAKS & CONTINUATION FLAGS

SYMBOL	DESCRIPTION
Y# X OR X Y#	PIPE OR WIRE IS CONTINUED ON DRAWING X (INCLUDING SHEET NUMBER), GRID COORDINATE (Y#); FLOW IS TO THAT DRAWING.
X Y# OR Y# X	PIPE OR WIRE IS CONTINUED ON DRAWING X (INCLUDING SHEET NUMBER), GRID COORDINATE (Y#); FLOW IS FROM THAT DRAWING.
X Y#	PIPE OR WIRE IS CONTINUED ON DRAWING X (INCLUDING SHEET NUMBER), GRID COORDINATE (Y#); FLOW IS IN BOTH DIRECTIONS

INTERLOCK SYMBOL

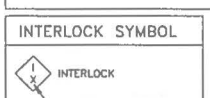

INSTRUMENT/EQUIPMENT LABELING LEGEND

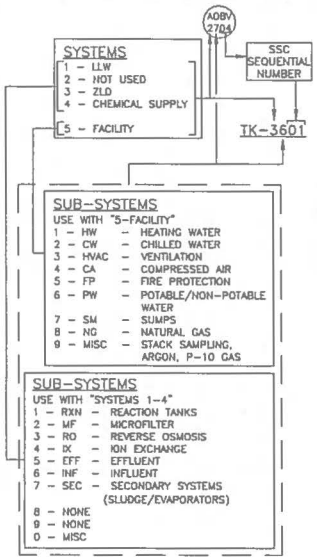

NO	DATE	CLASS REV	ADC	DESCRIPTION	DWN	DES	CHKD	SUB	APP

AECOM

RLWTF–UP LOW LEVEL WASTE SUBPROJECT

PROCESS FLOW DIAGRAM AND P&ID LEGEND

DRAWN	V DAVISON
DESIGN	B SHREEVE
CHECKED	C MOYERS
DATE	5/8/14

BLDG. 251 TA-50

SUBMITTED MANNY TARIN

APPROVED FOR RELEASE ED ARTIGLIA

Los Alamos NATIONAL LABORATORY PO Box 1663 Los Alamos, New Mexico 87545

SHEET M-0203

63 OF 118

CLASSIFICATION | REVIEWER | DATE

PROJECT ID 100761 | DRAWING NO C55865 | REV 0

CHANCE MOYERS NEW MEXICO 10838 REGISTERED PROFESSIONAL ENGINEER 05-09-14

8/25/14

File Location: P:\RLWTF LOW-LEVEL WASTE FACILITY\300 DAR\C55865 DWR\SHEETS\18 MECHANICAL\X55865-M-0203-R0.DWG
Plotted By: SANDRA WAESCH Plot Date: Friday, May 02, 2014

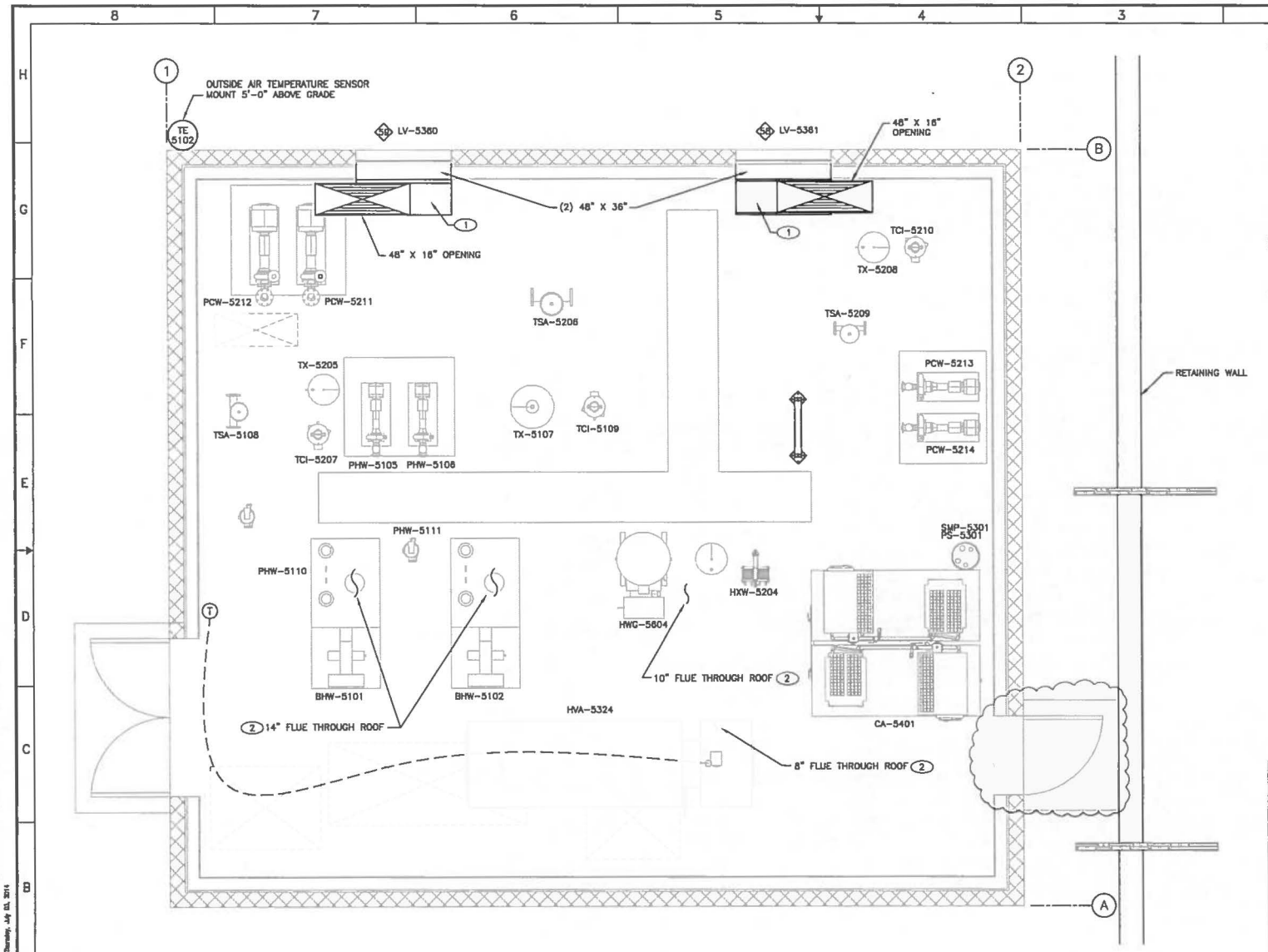

1 HVAC PLAN
1/2"=1'-0"

GENERAL NOTES

1. IF THIS SHEET IS NOT 24"x 36", THEN IT IS A REDUCED SIZE PLOT. USE GRAPHIC SCALE ACCORDINGLY.
2. FINISHED FLOOR ELEVATION 100'-0" = 7262.50 FT.
3. SEE SHEETS M-0201 THROUGH M-0203 FOR GENERAL MECHANICAL NOTES, LEGEND AND ABBREVIATIONS.
4. SEE DRAWING C55864, SHEETS M-7000 THROUGH M-7006 FOR MECHANICAL EQUIPMENT LIST.
5. SUPPORTS AND/OR HANGERS SHALL BE DESIGNED PER SPECIFICATION 220548.

KEYED NOTES

(1) COMBUSTION AIR DUCTS, 16"x48" DUCT UP TO WITHIN 1'-0" BELOW ROOF DECKING, OFFSET DUCT TO AVOID ROOF JOISTS. ONE 16"x48" DUCT DOWN TERMINATE WITHIN 1'-0" ABOVE FINISHED FLOOR.

(2) FLUE SHALL TERMINATE MINIMUM 3'-0" ABOVE HIGHEST POINT OF ROOF. TERMINATE FLUE WITH STACK CAP.

COMBUSTION AIR SIZING	
REQUIRED FREE AREA PER INPUT RATING OF APPLIANCES	1 SQ. IN. PER 4000 BTUH
INPUT OF APPLIANCES	280,000 BTUH
REQUIRED FREE AREA	700 SQ. IN.
FREE AREA FOR 48"x36" LOUVER WITH 43% FREE AREA	743 SQ. IN.

NO	DATE	CLASS REV	ADC	DESCRIPTION	DWN	DES	CHKD	SUB	APP
1	7/7/14	U		ADDED DOOR	AG	MM	ER	MT	

AECOM

RLWTF-UP LOW LEVEL WASTE SUBPROJECT

HVAC PLAN

DRAWN	V DAVISON
DESIGN	B SHREVE
CHECKED	C MOYERS
DATE	5/9/14

BLDG. 251 TA-50

SUBMITTED: MANNY TARIN

APPROVED FOR RELEASE: ED ARTIOLIA

Los Alamos NATIONAL LABORATORY PO Box 1663 Los Alamos, New Mexico 87545

SHEET M-1200

64 OF 118

CLASSIFICATION | REVIEWER | DATE

PROJECT ID 100761 | DRAWING NO C55865 | REV 1

N. EVELYN ROGERS NEW MEXICO 22184 REGISTERED PROFESSIONAL ENGINEER 7/14

6h52T :

File: Users\MANNY TARIN\Desktop\RLWTF LOW-LEVEL WASTE FACILITY\SSE DAP\C55865 DAP\SHEETS\M\MECHANICAL\C55865-M-1200-RLJ.dwg
Plotted By: BROSAM, CARLOS Plot Date: Monday, July 07, 2014

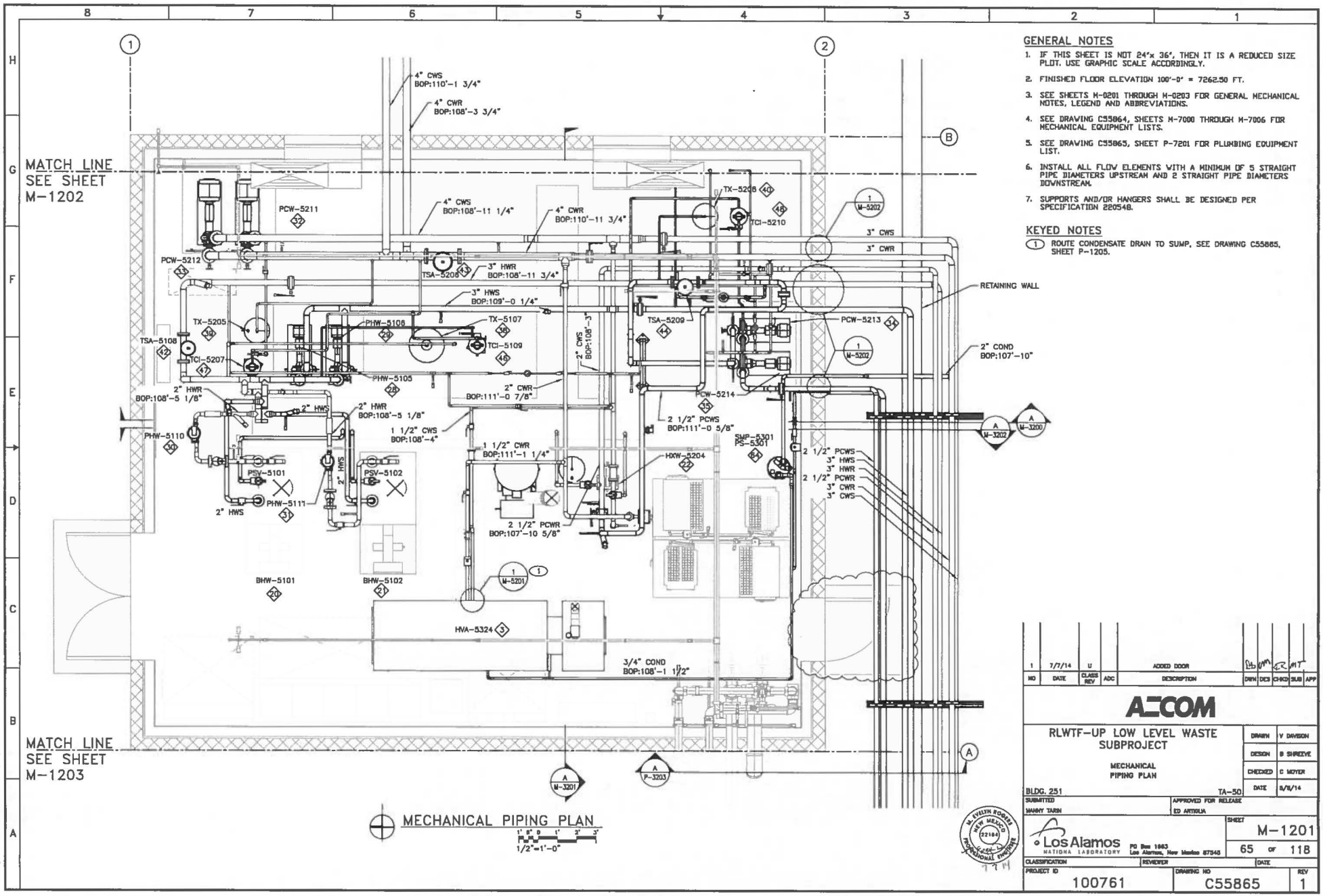

GENERAL NOTES

1. IF THIS SHEET IS NOT 24"x 36", THEN IT IS A REDUCED SIZE PLOT. USE GRAPHIC SCALE ACCORDINGLY.
2. FINISHED FLOOR ELEVATION 100'-0" = 7262.50 FT.
3. SEE SHEETS M-0201 THROUGH M-0203 FOR GENERAL MECHANICAL NOTES, LEGEND AND ABBREVIATIONS.
4. SEE DRAWING C55864, SHEETS M-7000 THROUGH M-7006 FOR MECHANICAL EQUIPMENT LISTS.
5. SEE DRAWING C55865, SHEET P-7201 FOR PLUMBING EQUIPMENT LIST.
6. INSTALL ALL FLOW ELEMENTS WITH A MINIMUM OF 5 STRAIGHT PIPE DIAMETERS UPSTREAM AND 2 STRAIGHT PIPE DIAMETERS DOWNSTREAM.
7. SUPPORTS AND/OR HANGERS SHALL BE DESIGNED PER SPECIFICATION 220548.

KEYED NOTES

(1) ROUTE CONDENSATE DRAIN TO SUMP, SEE DRAWING C55865, SHEET P-1205.

NO	DATE	CLASS REV	ADC	DESCRIPTION	DRW	DES	CHKD	SUB	APP
1	7/7/14	U		ADDED DOOR					

AECOM

RLWTF-UP LOW LEVEL WASTE SUBPROJECT

MECHANICAL PIPING PLAN

BLDG. 251 TA-50

DRAWN	V DAVISON
DESIGN	B SHREEVE
CHECKED	C MOYER
DATE	8/8/14

SUBMITTED: MANNY TARIN
APPROVED FOR RELEASE: ED ARTIOLA

Los Alamos NATIONAL LABORATORY, PO Box 1663, Los Alamos, New Mexico 87545

SHEET M-1201
65 OF 118

CLASSIFICATION | REVIEWER | DATE

PROJECT ID 100761
DRAWING NO C55865
REV 1

M. EVELYN ROMERO, NEW MEXICO 22184, PROFESSIONAL ENGINEER

File Location: W:\RLWTF LOW-LEVEL WASTE FACILITY\300 CAD\C55865 CUR\SHEETS\15 MECHANICAL\C55865-M-1201-RLWG
Plotted By: DAVISON, ALAN Plot Date: Thursday, July 03, 2014

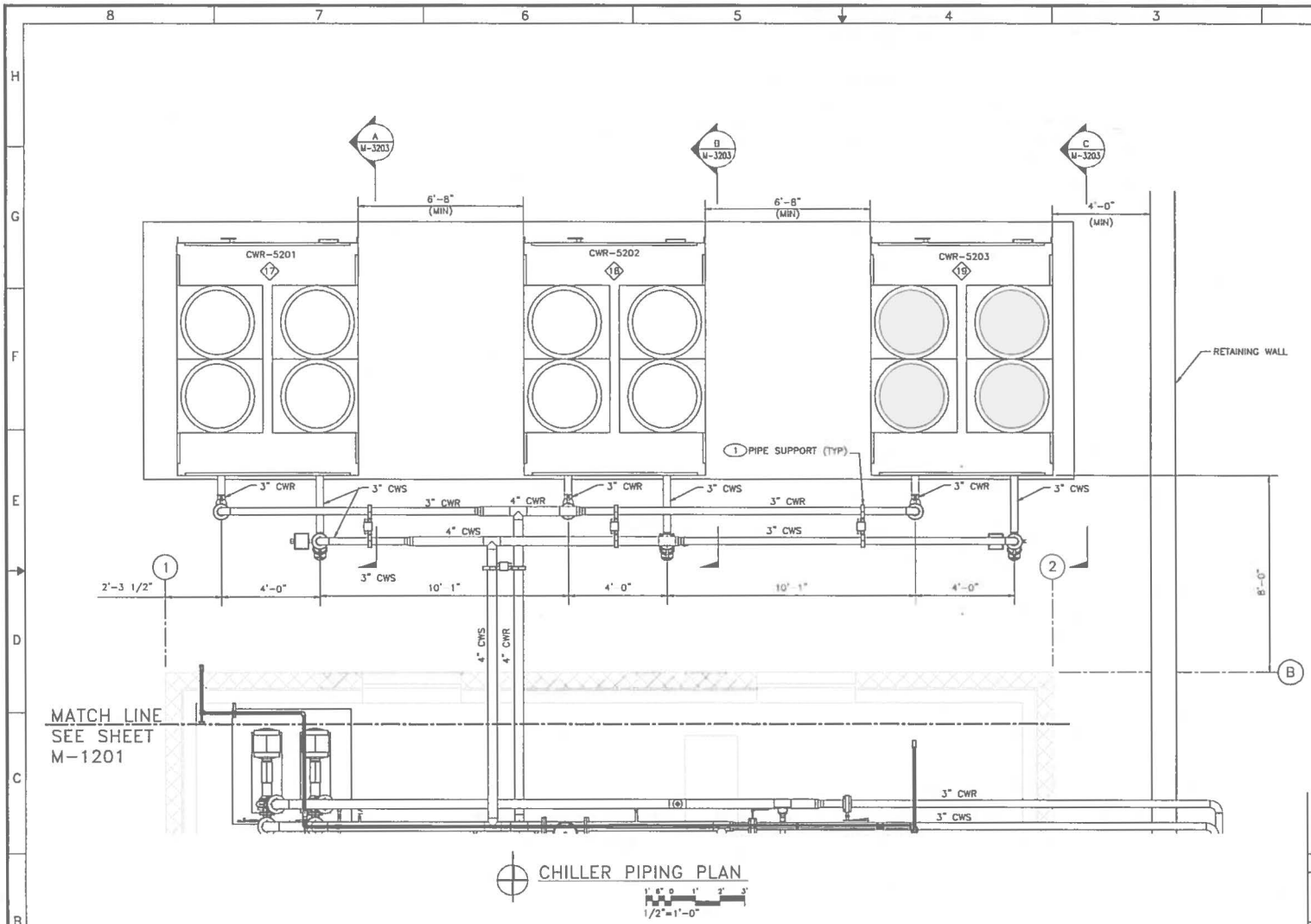

CHILLER PIPING PLAN

1/2"=1'-0"

GENERAL NOTES

1. IF THIS SHEET IS NOT 24"x 36", THEN IT IS A REDUCED SIZE PLOT. USE GRAPHIC SCALE ACCORDINGLY.
2. SEE SHEETS M-0201 THROUGH M-0203 FOR GENERAL MECHANICAL NOTES, LEGEND AND ABBREVIATIONS.
3. FINISHED FLOOR ELEVATION 100'-0" = 7262.50 FT.
4. SUPPORTS AND/OR HANGERS SHALL BE DESIGNED PER SPECIFICATION 220548.

KEYED NOTES:

(1) FOR PIPE SUPPORT DETAILS, SEE DRAWING C55865, SHEET Q-5202.

NO	DATE	CLASS REV	ADC	DESCRIPTION	DWN	DES	CHKD	SUB	APP

AECOM

RLWTF-UP LOW LEVEL WASTE SUBPROJECT

CHILLER PIPING PLAN

DRAWN V DAVISON

DESIGN B SHREEVE

CHECKED C MOYERS

DATE 5/8/14

BLDG. 251 TA-50

SUBMITTED MANNY TARIN

APPROVED FOR RELEASE ED ARTIGLIA

Los Alamos NATIONAL LABORATORY PO Box 1663 Los Alamos, New Mexico 87545

SHEET M-1202

66 OF 118

CLASSIFICATION REVIEWER DATE

PROJECT ID 100761

DRAWING NO C55865

REV 0

05-07-14

T55T125

File: L:\acad\dgn\ PUBLIC\RLWTF LOW-LEVEL WASTE FACILITY\300 CAD\C55865 CAD\SHEETS\13 MECHANICAL\355865-M-1202-R0.DWG

Plotted By: DAVISON, VANESSA; Plot Date: Friday, May 02, 2014

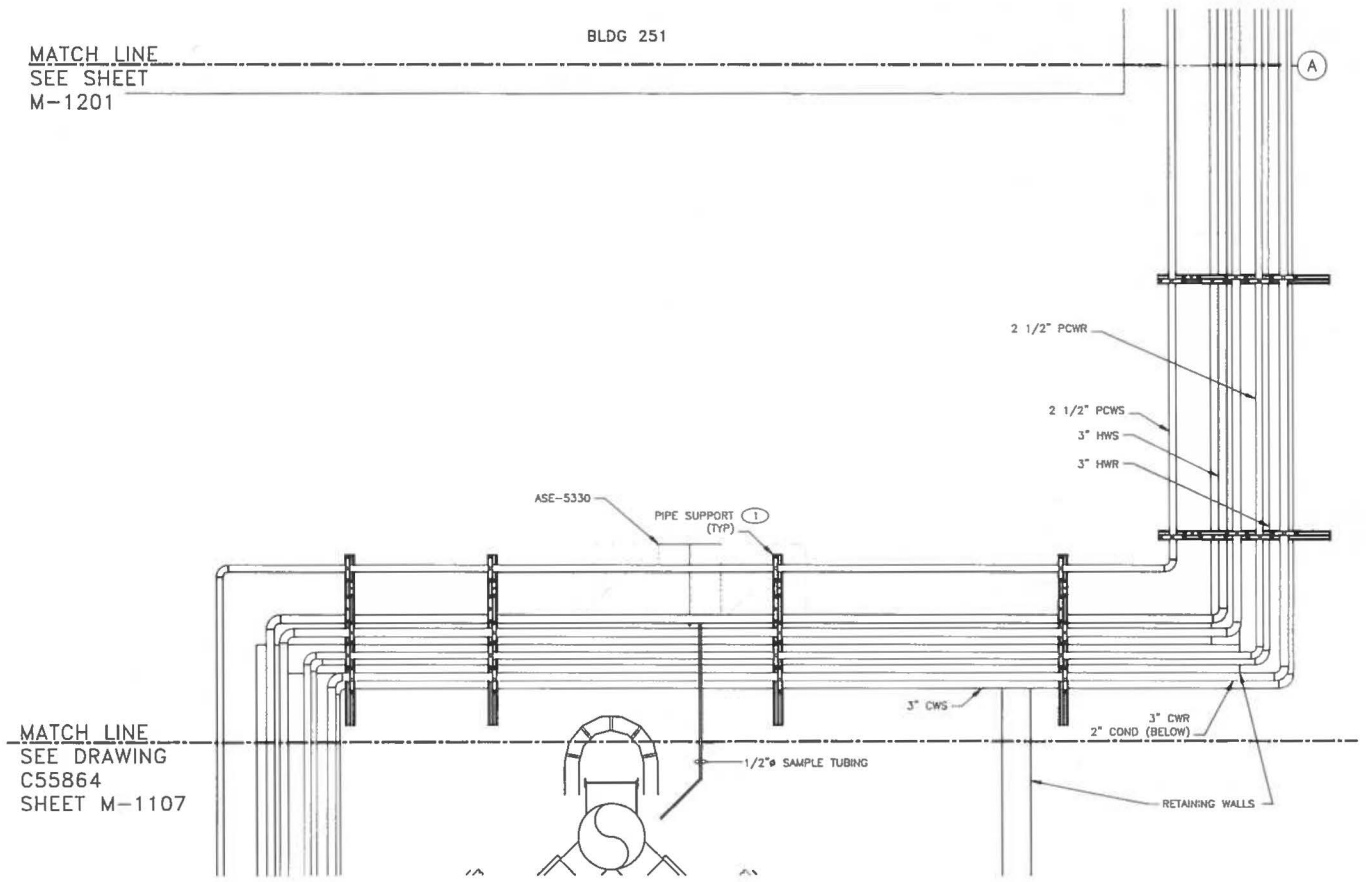

MECHANICAL FACILITY PIPING PLAN

1/2"=1'-0"

GENERAL NOTES

1. IF THIS SHEET IS NOT 24"x 36", THEN IT IS A REDUCED SIZE PLOT. USE GRAPHIC SCALE ACCORDINGLY.
2. SEE SHEETS M-0201 THROUGH M-0203 FOR GENERAL MECHANICAL NOTES, LEGEND AND ABBREVIATIONS.
3. FINISHED FLOOR ELEVATION 100'-0" = 7262.50 FT.
4. SUPPORTS AND/OR HANGERS SHALL BE DESIGNED PER SPECIFICATION 220548.

KEYED NOTES

1. FOR PIPE SUPPORT DETAILS, SEE DRAWING C55865, SHEET Q-5202.

NO	DATE	CLASS REV	ADC	DESCRIPTION	DWN	DES	CHKD	SUB	APP

AECOM

RLWTF-UP LOW LEVEL WASTE SUBPROJECT

MECHANICAL FACILITY PIPING PLAN

BLDG. 251 TA-50

DRAWN	V DAVISON
DESIGN	B SHREEVE
CHECKED	C MOYER
DATE	5/8/14

SUBMITTED: MANNY TARIN

APPROVED FOR RELEASE: ED ARTIGLIA

Los Alamos NATIONAL LABORATORY PO Box 1663 Los Alamos, New Mexico 87545

SHEET M-1203

67 of 118

CLASSIFICATION | REVIEWER | DATE

PROJECT ID 100761 | DRAWING NO C55865 | REV 0

CHARLES MOYERS NEW MEXICO 16838 LICENSED PROFESSIONAL ENGINEER

05-08-14

File Location: P:\RLWTF LOW-LEVEL WASTE FACILITY\500 CAD\C55865 DUB\SHEETS\15 MECHANICAL\55865-M-1203-R0.DWG
Plotted By: DAVISON, WANESSA Plot Date: Friday, May 02, 2014

25521 : 12552

GENERAL NOTES

1. IF THIS SHEET IS NOT 24"x 36", THEN IT IS A REDUCED SIZE PLOT. USE GRAPHIC SCALE ACCORDINGLY.
2. SEE DRAWING C55864, M-7000 THROUGH M-7006 FOR MECHANICAL EQUIPMENT LIST
3. SEE SHEETS M-0201 THROUGH M-0203 FOR GENERAL MECHANICAL NOTES, LEGEND AND ABBREVIATIONS.

KEYED NOTES:

1. MAXIMUM 11 1/2". MINIMUM 9" BETWEEN THE ROOF DECK OR FINISHED FLOOR.
2. INSTALL SPLITTER IN 72" X 48" OPENING TO SEPARATE THE UPPER AND LOWER COMBUSTION AIR OPENING. SPLITTER SHALL BE FULL DEPTH OF THE DUCT AT MIDPOINT OF LOUVER.
3. FOR PIPE SUPPORT DETAILS, SEE DRAWING C55865, SHEET Q-5202.

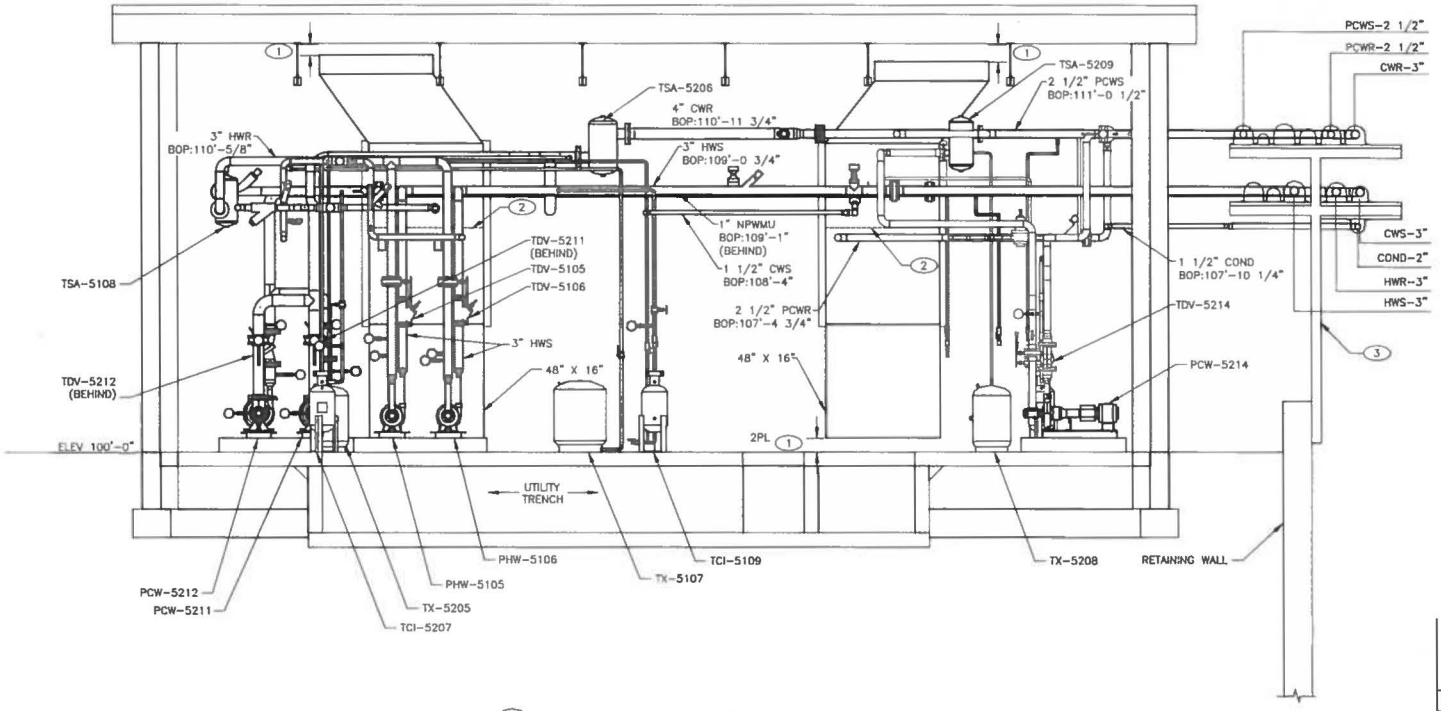

A M-1201 LLW UTILITY BUILDING SECTION

1/2"=1'-0"

NO	DATE	CLASS REV	ADC	DESCRIPTION	DWN	DES	CHKD	SUB	APP

AECOM

RLWTF-UP LOW LEVEL WASTE SUBPROJECT

SECTION

BLDG. 251 TA-50

DRAWN	V DAVISON
DESIGN	B SHREEVE
CHECKED	C MOYERS
DATE	8/8/14

SUBMITTED MANNY TARIN

APPROVED FOR RELEASE ED ARTIGLIA

Los Alamos NATIONAL LABORATORY PO Box 1663 Los Alamos, New Mexico 87545

SHEET M-3200

68 OF 118

CLASSIFICATION | REVIEWER | DATE

PROJECT ID 100761 | DRAWING NO C55865 | REV 0

CHARLES MOYERS NEW MEXICO 18838 LICENSED PROFESSIONAL ENGINEER

05-08-14

File Location: P:\RLWTF LOW-LEVEL WASTE FACILITY\500 CAD\C55865 CUB\SHEETS\15 MECHANICAL\55865-M-3200-R0.DWG
Plotted By: DAVISON, WANESSA; Plot Date: Friday, May 02, 2014

: 12553

GENERAL NOTES

1. IF THIS SHEET IS NOT 24"x 36", THEN IT IS A REDUCED SIZE PLOT. USE GRAPHIC SCALE ACCORDINGLY.
2. SEE DRAWING C55864, M-7000 THROUGH M-7006 FOR MECHANICAL EQUIPMENT LIST.
3. SEE SHEETS M-0201 THROUGH M-0203 FOR GENERAL MECHANICAL NOTES, LEGEND AND ABBREVIATIONS.

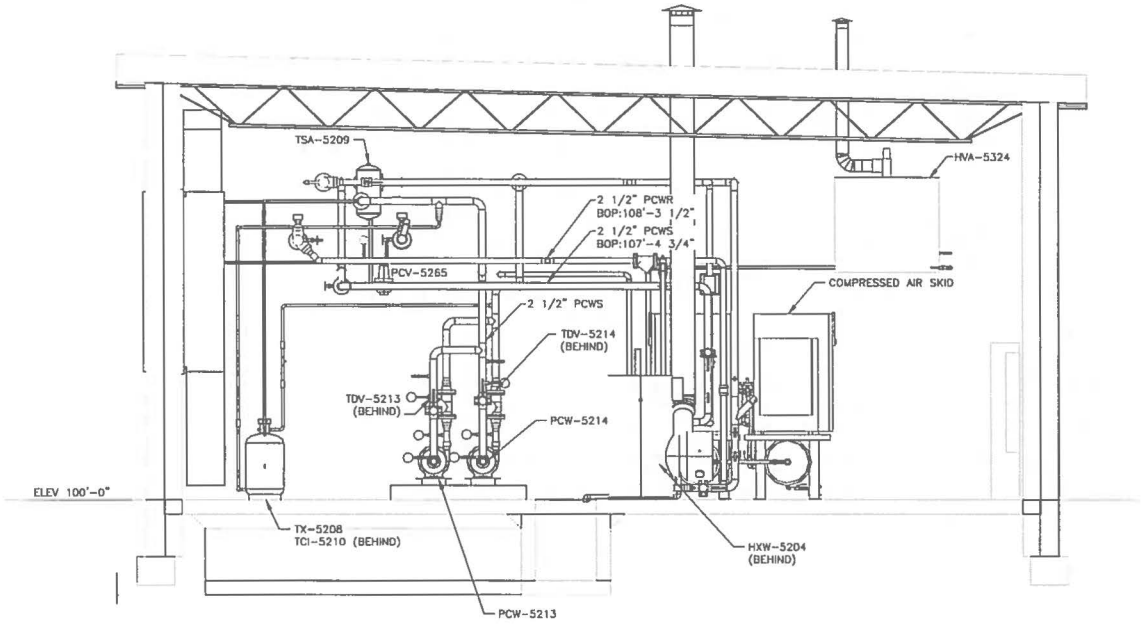

A M-1201 LLW UTILITY BUILDING SECTION

1/2"=1'-0"

NO	DATE	CLASS REV	ADC	DESCRIPTION	DWN	DES	CHKD	SUB	APP

AECOM

RLWTF-UP LOW LEVEL WASTE SUBPROJECT

SECTION

BLDG. 251 TA-50

DRAWN	V DAVISON
DESIGN	B SHREEVE
CHECKED	C MOYERS
DATE	5/8/14

SUBMITTED MANNY TARIN

APPROVED FOR RELEASE ED ARTIGLIA

Los Alamos NATIONAL LABORATORY PO Box 1663 Los Alamos, New Mexico 87545

SHEET M-3201

69 OF 118

CLASSIFICATION REVIEWER DATE

PROJECT ID 100761 DRAWING NO C55865 REV 0

CHARLES MOYERS NEW MEXICO 18838 LICENSED PROFESSIONAL ENGINEER

05-08-14

File Location: P:\RLWTF LOW-LEVEL WASTE FACILITY\500 CAD\C55865 CUB\SHEETS\15 MECHANICAL\55865-M-3201-R0.DWG
Plotted By: DAVISON, WAMESK Plot Date: Friday, May 02, 2014

12554

GENERAL NOTES

1. IF THIS SHEET IS NOT 24"x 36", THEN IT IS A REDUCED SIZE PLOT. USE GRAPHIC SCALE ACCORDINGLY.
2. SEE DRAWING C55864, M-7000 THROUGH M-7006 FOR MECHANICAL EQUIPMENT LIST.
3. SEE SHEETS M-0201 THROUGH M-0203 FOR GENERAL MECHANICAL NOTES, LEGEND AND ABBREVIATIONS.

KEYED NOTES

1. FOR PIPE SUPPORT DETAILS, SEE DRAWING C55865, DETAIL 1, SHEET Q-5202

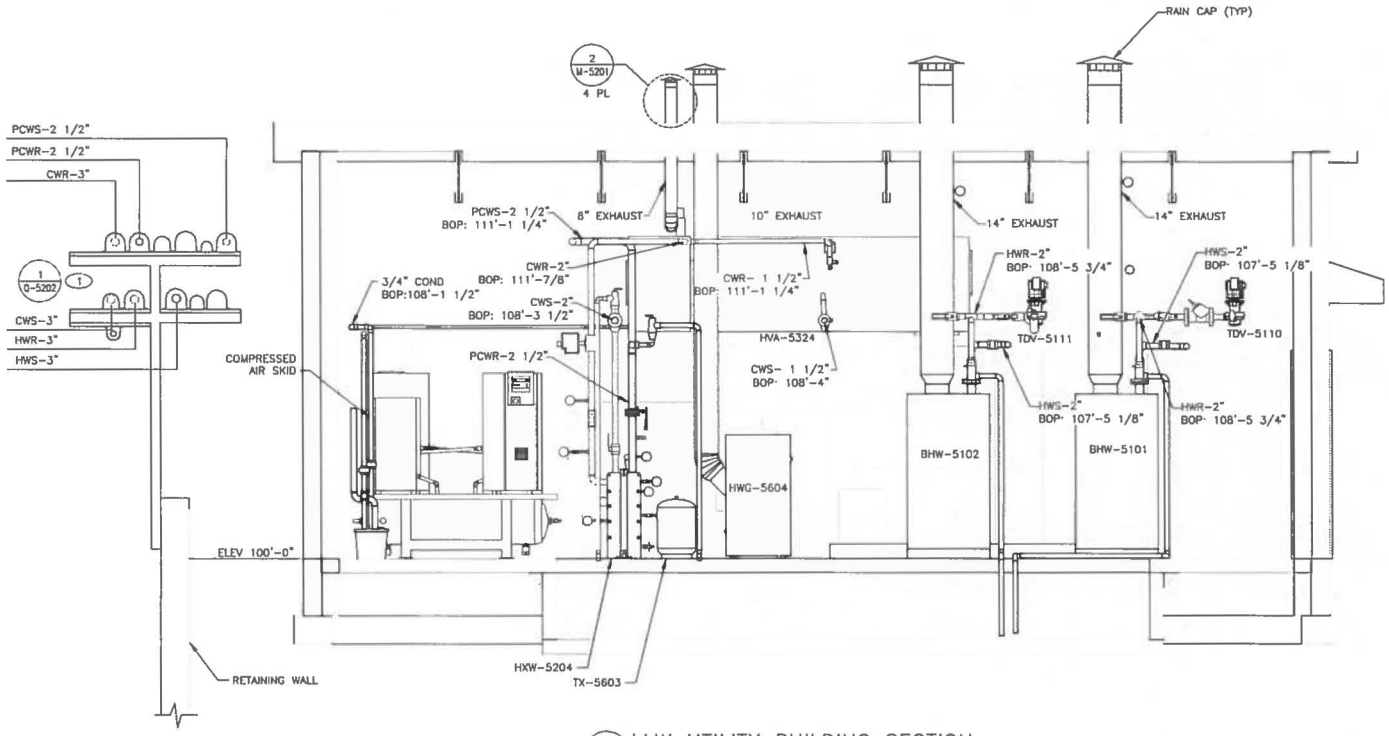

A M-1201 LLW UTILITY BUILDING SECTION

1/2"=1'-0"

NO	DATE	CLASS REV	ADC	DESCRIPTION	DWN	DES	CHKD	SUB	APP

AECOM

RLWTF-UP LOW LEVEL WASTE SUBPROJECT

SECTION

BLDG. 251 TA-50

DRAWN	V DAVISON
DESIGN	B SHREEVE
CHECKED	C MOYERS
DATE	5/8/14

SUBMITTED: MANNY TARIN

APPROVED FOR RELEASE: ED ARTIGLIA

Los Alamos NATIONAL LABORATORY PO Box 1663 Los Alamos, New Mexico 87545

SHEET M-3202

70 OF 118

CLASSIFICATION | REVIEWER | DATE

PROJECT ID 100761 | DRAWING NO C55865 | REV 0

CHARLES MOYERS NEW MEXICO 18838 LICENSED PROFESSIONAL ENGINEER

05-08-14

File Location: P:\RLWTF LOW-LEVEL WASTE FACILITY\500 CAD\C55865 CUB\SHEETS\15 MECHANICAL\55865-M-3202-R0.DWG
Plotted By: DAVISON, VANESSA; Plot Date: Friday, May 02, 2014

55521 : 12555

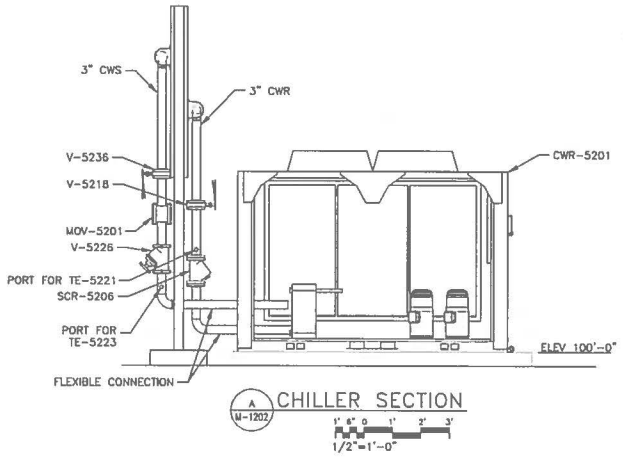

A M-1202 CHILLER SECTION

1' 6" 0 1' 2' 3'

1/2"=1'-0"

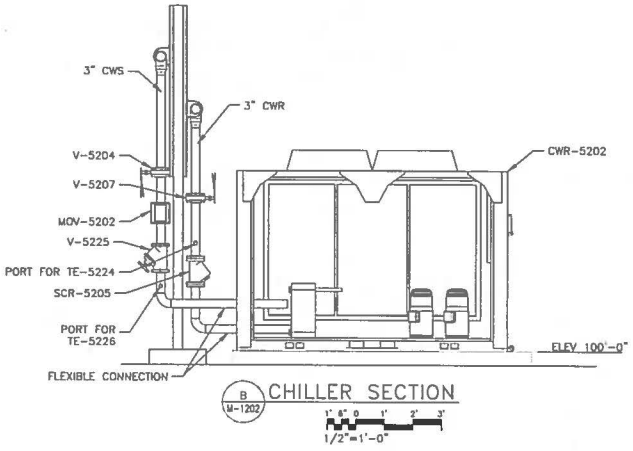

B M-1202 CHILLER SECTION

1' 6" 0 1' 2' 3'

1/2"=1'-0"

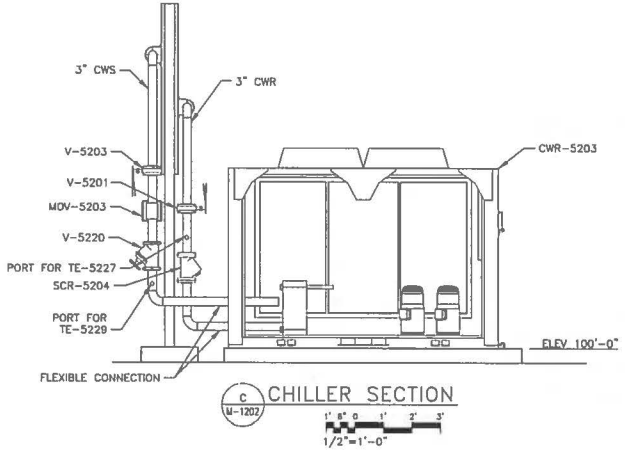

C M-1202 CHILLER SECTION

1' 6" 0 1' 2' 3'

1/2"=1'-0"

GENERAL NOTES

1. IF THIS SHEET IS NOT 24"x 36", THEN IT IS A REDUCED SIZE PLOT. USE GRAPHIC SCALE ACCORDINGLY.
2. SEE DRAWING C55864, M-7000 THROUGH M-7006 FOR MECHANICAL EQUIPMENT LIST.
3. SEE SHEETS M-0201 THROUGH M-0203 FOR GENERAL MECHANICAL NOTES, LEGEND AND ABBREVIATIONS.

NO	DATE	CLASS REV	ADC	DESCRIPTION	DWN	DES	CHKD	SUB	APP

AECOM

RLWTF-UP LOW LEVEL WASTE SUBPROJECT

CHILLER SECTIONS

BLDG. 251 TA-50

DRAWN	V DAVISON
DESIGN	B SHREEVE
CHECKED	C MOYERS
DATE	5/8/14

SUBMITTED MANNY TARIN

APPROVED FOR RELEASE ED ARTIGLIA

Los Alamos NATIONAL LABORATORY PO Box 1663 Los Alamos, New Mexico 87545

SHEET M-3203

71 OF 118

CLASSIFICATION REVIEWER DATE

PROJECT ID 100761 DRAWING NO C55865 REV 0

CHARLES MOYERS 16839 NEW MEXICO PROFESSIONAL ENGINEER 05-09-14

95521

File: L:\acs\Env PA\RLWTF LOW-LEVEL WASTE FACILITY\SDR CAD\C55865 CU\SHEETS\15 MECHANICAL\C55865-M-3203-R0.DWG

Plotted By: DAVISON, VANESSA; Plot Date: Friday, May 02, 2014

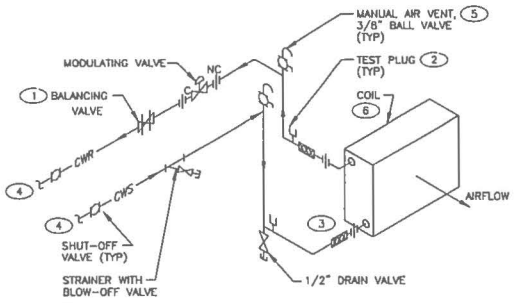

ISOMETRIC VIEW

1 M-1201 CHILLED WATER COIL 2-WAY VALVE PIPING DETAIL

(VARIABLE FLOW THROUGH COIL, FAIL TO NO COOLING)

SCALE: NONE

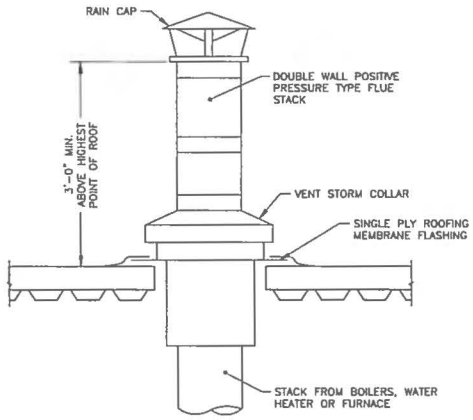

SECTION VIEW

2 M-3202 FLUE VENT DETAIL

SCALE: NONE

KEYED NOTES:

1. INSTALL BALANCING VALVE WITH MINIMUM OF 3 STRAIGHT PIPE DIAMETERS UPSTREAM AND 1 STRAIGHT PIPE DIAMETER DOWNSTREAM.
2. MAINTAIN 6" MINIMUM CLEARANCE ABOVE TEST PLUG TO ALLOW GAUGE TO BE INSERTED. DO NOT COVER PLUG WITH INSULATION.
3. INSTALL FLEX CONNECTION AT COIL CONNECTIONS.
4. CONNECT BRANCH LINES FROM COIL INTO TOP OR SIDE OF SUPPLY AND RETURN MAINS. CONNECTING INTO BOTTOM OF MAIN IS NOT ACCEPTABLE.
5. INSTALL MANUAL AIR VENTS IN SUPPLY AND RETURN COIL BRANCH PIPING AS FOLLOWS:
   A) IN PIPING HIGH POINT WHEN PIPING IS ABOVE MAIN.
   B) CLOSE TO COIL WHEN PIPING IS NOT ABOVE MAIN (SIDE CONNECTION).
6. INSTALL COIL SO AIR PASSES THROUGH FINS IN PROPER DIRECTION NOTED ON COIL.

NO	DATE	CLASS REV	ADC	DESCRIPTION	DWN	DES	CHKD	SUB	APP

AECOM

RLWTF-UP LOW LEVEL WASTE SUBPROJECT

MECHANICAL DETAILS

DRAWN	V DAVISON
DESIGN	B SHREEVE
CHECKED	C MOYERS
DATE	5/6/14

BLDG. 251 TA-50

SUBMITTED: MANNY TARIN

APPROVED FOR RELEASE: ED ARTIGLIA

Los Alamos NATIONAL LABORATORY PO Box 1663 Los Alamos, New Mexico 87545

SHEET M-5201

72 OF 118

CLASSIFICATION | REVIEWER | DATE

PROJECT ID 100761 | DRAWING NO C55865 | REV 0

CHARLES MOYERS NEW MEXICO 16838 LICENSED PROFESSIONAL ENGINEER

05-08-14

File Location: P:\RLWTF LOW-LEVEL WASTE FACILITY\500 CAD\C55865 CUB\SHEETS\15 MECHANICAL\55865-M-5201-R0.DWG
Plotted By: DAVISON, VANESSA; Plot Date: Friday, May 02, 2014

: 12557

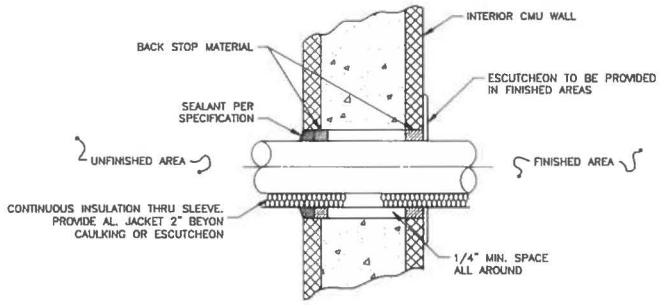

SECTION VIEW

1 / M-1201 CMU WALL PIPE PENETRATION DETAIL

NO	DATE	CLASS REV	ADC	DESCRIPTION	DWN	DES	CHKD	SUB	APP

AECOM

RLWTF–UP LOW LEVEL WASTE SUBPROJECT

MECHANICAL DETAILS

DRAWN	V DAWSON
DESIGN	B SHREEVE
CHECKED	C MOYERS
DATE	5/8/14

BLDG. 251 TA-50

SUBMITTED MANNY TARIN

APPROVED FOR RELEASE ED ARTIGLIA

CHARLES MOYERS NEW MEXICO 15839 REGISTERED PROFESSIONAL ENGINEER 05-07-14

Los Alamos NATIONAL LABORATORY PO Box 1663 Los Alamos, New Mexico 87545

SHEET M-5202

73 OF 118

CLASSIFICATION REVIEWER DATE

PROJECT ID 100761

DRAWING NO C55865

REV 0

85521 :

File Location: P:\RLWTF LOW-LEVEL WASTE FACILITY\300 CAD\C55865 CUR\SHEETS\15 MECHANICAL\55865-M-5202-R0.DWG

Plotted By: DWSON, WMCSA; Plot Date: Friday, May 02, 2014

GENERAL NOTES

1. SEE DRAWING C55864 SHEETS M-7000 THROUGH M-7006 FOR MECHANICAL EQUIPMENT LIST.
2. SEE SHEETS M-0201, M-0202, AND M-0203 FOR GENERAL MECHANICAL NOTES, LEGEND AND ABBREVIATIONS.

KEYED NOTES

(1) BAS CONTROLLER WILL COMMUNICATE ALL SIGNALS TO FCS.

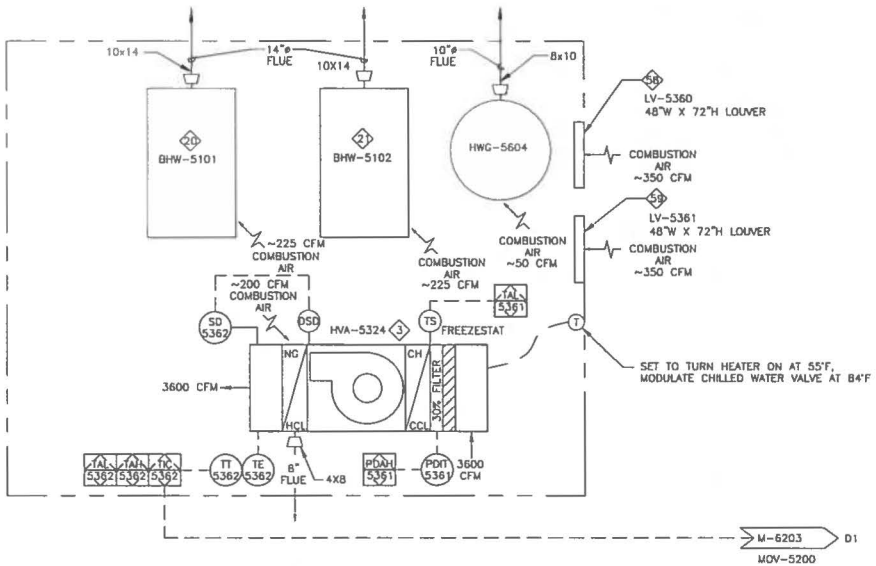

AIR FLOW SCHEMATIC
SCALE: NONE

NO	DATE	CLASS REV	ADC	DESCRIPTION	DWN	DES	CHKD	SUB	APP

AECOM

RLWTF-UP LOW LEVEL WASTE SUBPROJECT

AIR FLOW DIAGRAM

DRAWN	V DAVISON
DESIGN	B SHREEVE
CHECKED	C MOYERS
DATE	5/8/14

BLDG. 251 TA-50

SUBMITTED MANNY TARIN

APPROVED FOR RELEASE ED ARTIGLIA

Los Alamos NATIONAL LABORATORY PO Box 1663 Los Alamos, New Mexico 87545

SHEET M-6200

74 OF 118

CLASSIFICATION REVIEWER DATE

PROJECT ID 100761

DRAWING NO C55865

REV 0

CHARLES MOYERS NEW MEXICO 10838 REGISTERED PROFESSIONAL ENGINEER
05-07-14

65521.1559

File Location: P:\RLWTF LOW-LEVEL WASTE FACILITY\500 CAD\C55865 CUD\SHEETS\15 MECHANICAL\55865-M-6200-R0.DWG
Plotted By: DAVISON, VANESSA Plot Date: Friday, May 02, 2014

SEQUENCE OF OPERATIONS HVA-5324

A GRAPHIC WILL DISPLAY THE STATUS OF HVA-5324.

RUN CONDITIONS:
HVA-5324 RUNS CONTINUOUSLY UNLESS SHUTDOWN ON SAFETIES.

EMERGENCY SHUTDOWN:
THE UNIT SHALL SHUT DOWN AND GENERATE AN ALARM UPON RECEIVING AN EMERGENCY SHUTDOWN SIGNAL.

FREEZE PROTECTION:
THE UNIT SHALL SHUT DOWN AND GENERATE AN ALARM UPON RECEIVING A FREEZESTAT STATUS.

SMOKE DETECTION:
THE UNIT SHALL SHUT DOWN AND GENERATE AN ALARM UPON RECEIVING A SMOKE DETECTOR STATUS FROM THE FACP.

SUPPLY FAN:
THE SUPPLY FAN SHALL RUN ANYTIME THE UNIT IS COMMANDED TO RUN.

ALARMS SHALL BE PROVIDED AS FOLLOWS:

- SUPPLY FAN FAILURE: COMMANDED ON, BUT THE STATUS IS OFF.
- SUPPLY FAN IN HAND: COMMANDED OFF, BUT THE STATUS IS ON.

ROOM TEMPERATURE COOLING SET-POINT
THE CONTROLLER SHALL MONITOR THE SPACE AIR TEMPERATURE AND SHALL MODULATE THE COOLING COIL VALVE TO MAINTAIN COOLING SET-POINT.

COOLING SETPOINT SHALL BE 84°F.

HEATING SET-POINT SHALL BE 55°F.

COOLING COIL VALVE.
THE CONTROLLER SHALL MEASURE THE SUPPLY AIR TEMPERATURE AND MODULATE THE COOLING COIL VALVE TO MAINTAIN THE SPACE COOLING SET-POINT.

THE COOLING SHALL BE ENABLED WHENEVER:

- OUTSIDE AIR TEMPERATURE IS GREATER THAN 60°F (ADJ.).
- AND THE SPACE TEMPERATURE IS ABOVE COOLING SETPOINT.
- AND THE FAN STATUS IS ON.

THE COOLING COIL VALVE SHALL OPEN TO 50% (ADJ.) WHENEVER THE FREEZESTAT IS ON.

HEATING:
THE CONTROLLER SHALL MEASURE THE SPACE TEMPERATURE, MODULATE/STAGE THE GAS HEATING CONTROL VALVES TO MAINTAIN THE SPACE HEATING SET-POINT.

THE HEATING SHALL BE ENABLED WHENEVER:

- OUTSIDE AIR TEMPERATURE IS LESS THAN 65°F (ADJ.).
- AND THE SPACE TEMPERATURE IS BELOW HEATING SETPOINT.
- AND THE FAN STATUS IS ON.

FILTER DIFFERENTIAL PRESSURE MONITOR:
THE CONTROLLER SHALL MONITOR THE DIFFERENTIAL PRESSURE ACROSS THE FINAL FILTER.

ALARMS SHALL BE PROVIDED AS FOLLOWS:

- FINAL FILTER CHANGE REQUIRED: FINAL FILTER DIFFERENTIAL PRESSURE EXCEEDS A USER DEFINABLE LIMIT (ADJ.).

SUPPLY AIR TEMPERATURE:
THE CONTROLLER SHALL MONITOR THE SUPPLY AIR TEMPERATURE.

ALARMS SHALL BE PROVIDED AS FOLLOWS:

- HIGH SUPPLY AIR TEMP: IF THE SUPPLY AIR TEMPERATURE IS GREATER THAN 120°F (ADJ.).
- LOW SUPPLY AIR TEMP: IF THE SUPPLY AIR TEMPERATURE IS LESS THAN 45°F (ADJ.).

	HARDWARE POINTS				SOFTWARE POINTS					
POINT NAME	AI	AO	BI	BO	AV	BV	SCHED	TREND	ALARM	SHOW ON GRAPHIC
OUTSIDE AIR TEMP	X							X		X
FINAL FILTER DIFFERENTIAL PRESSURE	X							X		
SUPPLY AIR TEMP	X							X		X
COOLING VALVE		X						X		X
HEATING		X						X		X
FREEZESTAT			X					X	X	X
SMOKE DETECTOR			X					X	X	X
SUPPLY FAN STATUS			X					X		X
SUPPLY FAN START/STOP				X				X		X
SUPPLY AIR TEMP SETPOINT					X			X		X
EMERGENCY SHUTDOWN						X		X	X	X
SUPPLY FAN FAILURE									X	
SUPPLY FAN IN HAND									X	
FINAL FILTER CHANGE REQUIRED									X	X
HIGH SUPPLY AIR TEMP									X	
LOW SUPPLY AIR TEMP									X	
TOTALS	3	2	3	1	1	1	0	11	8	11

TOTAL HARDWARE (9) TOTAL HARDWARE (21)

NO	DATE	CLASS REV	ADC	DESCRIPTION	DWN	DES	CHKD	SUB	APP

AECOM

RLWTF-UP LOW LEVEL WASTE SUBPROJECT

SEQUENCE OF OPERATIONS

DRAWN V DAVISON
DESIGN B SHREEVE
CHECKED C MOYERS
DATE 5/6/14

BLDG. 251 TA-50

SUBMITTED MANNY TARIN
APPROVED FOR RELEASE ED ARTIOLIA

Los Alamos NATIONAL LABORATORY PO Box 1663 Los Alamos, New Mexico 87545

SHEET M-6201
75 OF 118

CLASSIFICATION REVIEWER DATE

PROJECT ID 100761
DRAWING NO C55865
REV 0

CHARLES MOYERS NEW MEXICO 16839 REGISTERED PROFESSIONAL ENGINEER
05-07-14

09527 :
File Location: P:\RLWTF LOW-LEVEL WASTE FACILITY\500 CAD\C55865 CAD\SHEETS\15 MECHANICAL\55865-M-6201-R0.DWG
Plotted By: DAVISON, VANESSA; Plot Date: Friday, May 02, 2014

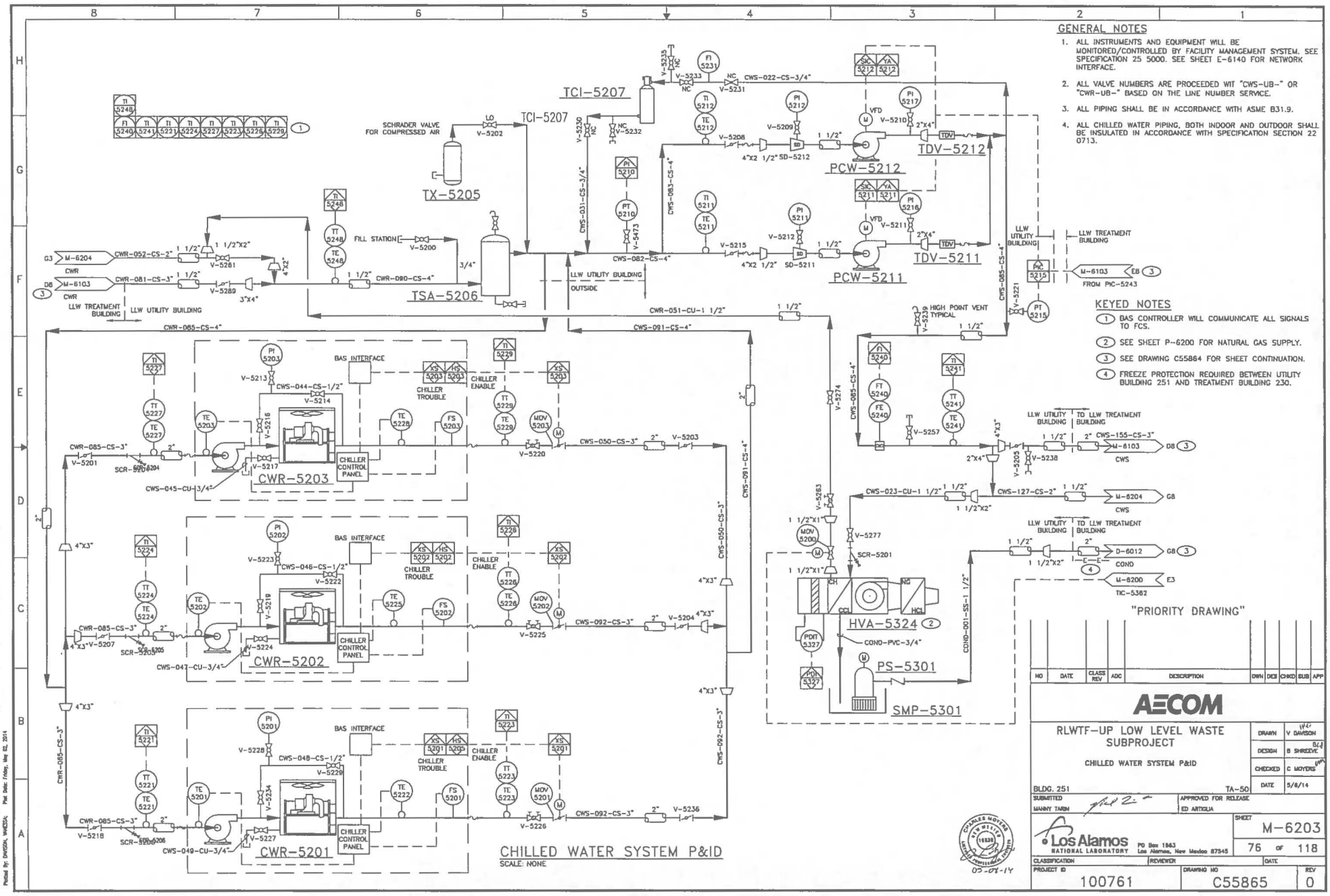
GENERAL NOTES
1. ALL INSTRUMENTS AND EQUIPMENT WILL BE MONITORED/CONTROLLED BY FACILITY MANAGEMENT SYSTEM. SEE SPECIFICATION 25 5000. SEE SHEET E-6140 FOR NETWORK INTERFACE.
2. ALL VALVE NUMBERS ARE PROCEEDED WIT "CWS-UB-" OR "CWR-UB-" BASED ON THE LINE NUMBER SERVICE.
3. ALL PIPING SHALL BE IN ACCORDANCE WITH ASME B31.9.
4. ALL CHILLED WATER PIPING, BOTH INDOOR AND OUTDOOR SHALL BE INSULATED IN ACCORDANCE WITH SPECIFICATION SECTION 22 0713.
KEYED NOTES
1 BAS CONTROLLER WILL COMMUNICATE ALL SIGNALS TO FCS.
2 SEE SHEET P-6200 FOR NATURAL GAS SUPPLY.
3 SEE DRAWING C55864 FOR SHEET CONTINUATION.
4 FREEZE PROTECTION REQUIRED BETWEEN UTILITY BUILDING 251 AND TREATMENT BUILDING 230.
TCI-5207
TX-5205
TSA-5206
PCW-5212
PCW-5211
TDV-5212
TDV-5211
CWR-5203
CWR-5202
CWR-5201
HVA-5324
SMP-5301
PS-5301
CHILLED WATER SYSTEM P&ID
SCALE: NONE
"PRIORITY DRAWING"
AECOM
RLWTF-UP LOW LEVEL WASTE SUBPROJECT
CHILLED WATER SYSTEM P&ID
BLDG. 251
TA-50
DRAWN V DAVISON
DESIGN B SHREEVE
CHECKED C MOYERS
DATE 5/8/14
SUBMITTED MANNY TARIN
APPROVED FOR RELEASE ED ARTIGLIA
Los Alamos NATIONAL LABORATORY PO Box 1663 Los Alamos, New Mexico 87545
SHEET M-6203
76 OF 118
CLASSIFICATION
REVIEWER
DATE
PROJECT ID 100761
DRAWING NO C55865
REV 0

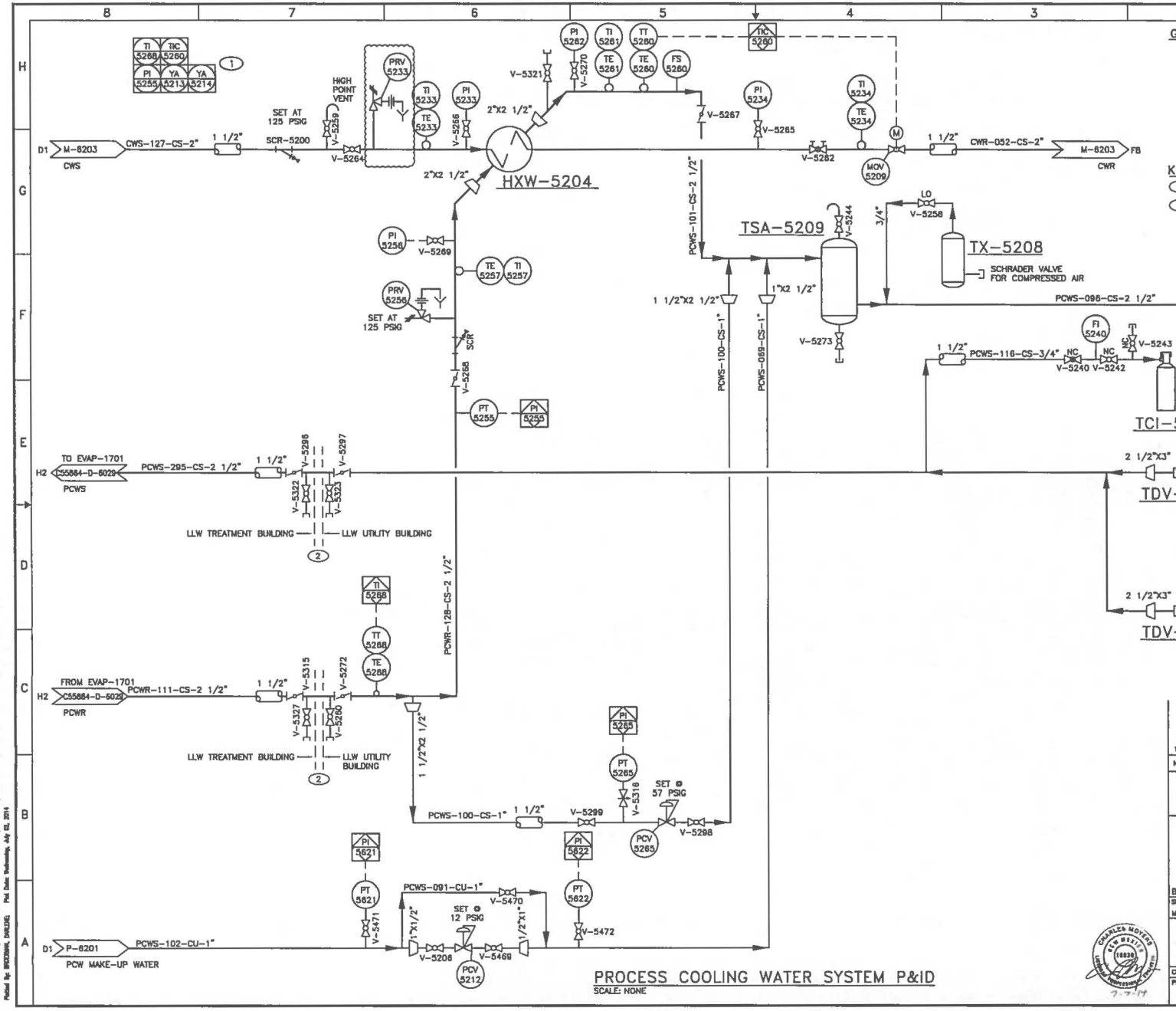

GENERAL NOTES

1. ALL INSTRUMENTS AND EQUIPMENT WILL BE MONITORED/CONTROLLED BY FACILITY MANAGEMENT SYSTEM. SEE SPECIFICATION 25 5000. SEE SHEET E-6140 FOR NETWORK INTERFACE.
2. ALL VALVE NUMBERS ARE PROCEEDED WITH "CWS-UB-", "CWR-UB-", "PCWS-UB-", OR "PCWS-UB-" BASED ON THE LINE NUMBER SERVICE.
3. ALL PIPING SHALL BE IN ACCORDANCE WITH ASME B31.9.
4. ALL PIPING, BOTH INDOOR AND OUTDOOR SHALL BE INSULATED IN ACCORDANCE WITH SPECIFICATION SECTION 22 0713.

KEYED NOTES

1. BAS CONTROLLER WILL COMMUNICATE ALL SIGNALS TO FCS.
2. 2" THICK INSULATION AND HEAT TRACE OUTDOOR PIPING BETWEEN BUILDINGS.

"PRIORITY DRAWING"

NO	DATE	CLASS REV	ADC	DESCRIPTION	DWN	DES	CHKD	SUB	APP
1	7/7/14	U		ADDED VALVE					

AECOM

RLWTF-UP LOW LEVEL WASTE SUBPROJECT

PROCESS COOLING WATER SYSTEM P&ID

BLDG. 251 TA-50

DRAWN	V DAVISON
DESIGN	B SHREEVE
CHECKED	C MOYERS
DATE	5/8/14

SUBMITTED: MANNY TARIN

APPROVED FOR RELEASE: ED ARTIGLIA

Los Alamos NATIONAL LABORATORY PO Box 1663 Los Alamos, New Mexico 87545

SHEET M-6204

77 OF 118

CLASSIFICATION | REVIEWER | DATE

PROJECT ID 100761 | DRAWING NO C55865 | REV 1

PROCESS COOLING WATER SYSTEM P&ID

SCALE: NONE

File Location: W:\RLWTF LOW-LEVEL WASTE FACILITY\500 CAD\C55865 CUB\SHEETS\15 MECHANICAL\55865-M-6204-R0.DWG

Plotted By: BROCKMAN, DARLENE; Plot Date: Wednesday, July 02, 2014

12562

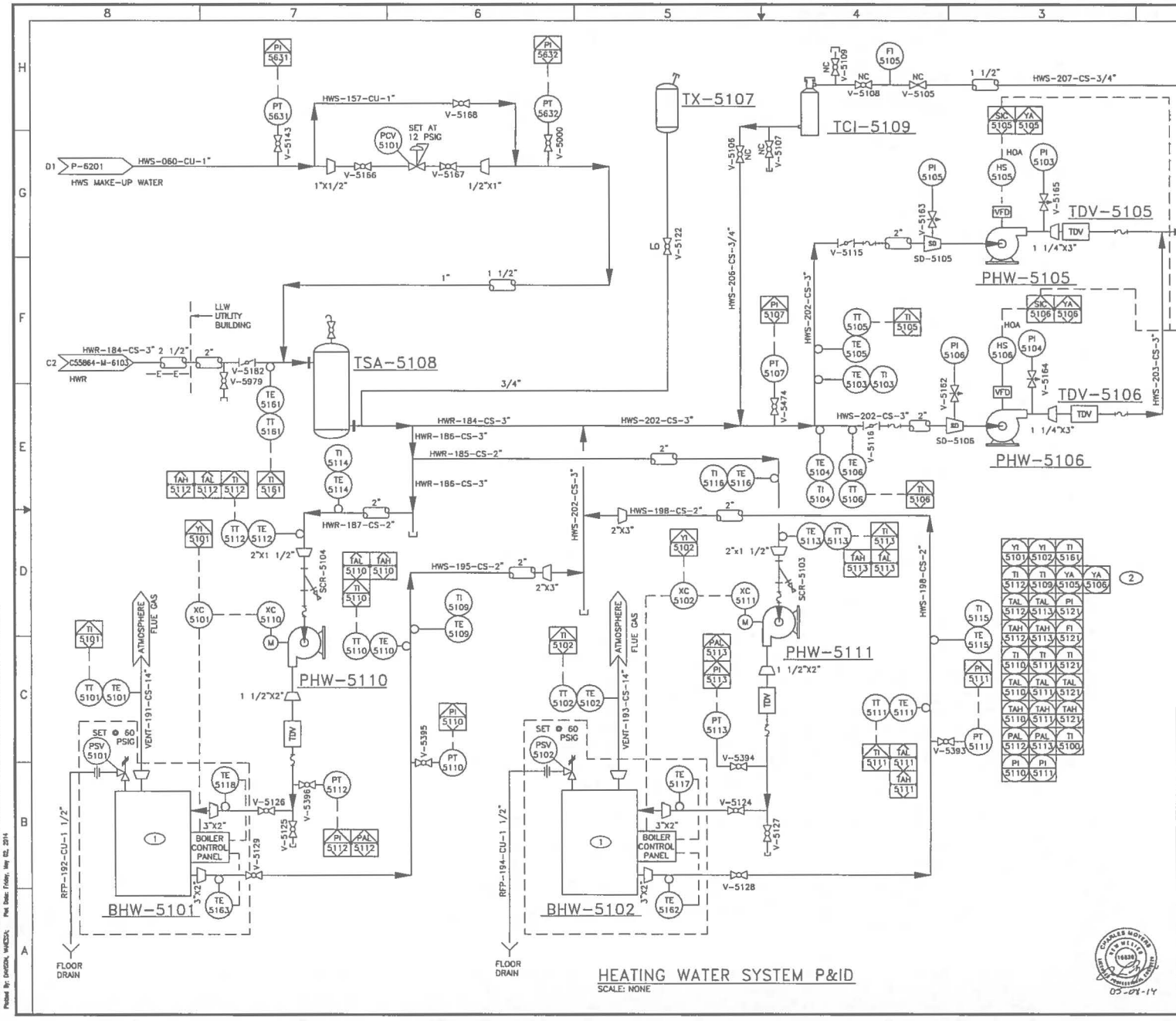

HEATING WATER SYSTEM P&ID

SCALE: NONE

GENERAL NOTES

1. ALL INSTRUMENTS AND EQUIPMENT WILL BE MONITORED/CONTROLLED BY FACILITY MANAGEMENT SYSTEM, SEE SPECIFICATION 25 5000. SEE SHEET E-6140 FOR NETWORK INTERFACE.
2. ALL VALVE NUMBERS ARE PROCEEDED WITH "HWS-UB-" OR "HWR-UB-" BASED ON THE LINE NUMBER SERVICE.
3. ALL PIPING, BOTH INDOOR AND OUTDOOR SHALL BE INSULATED IN ACCORDANCE WITH SPECIFICATION SECTION 22 0713.

KEYED NOTES

1. SEE SHEET P-6200 FOR NATURAL GAS P&ID.
2. BAS CONTROLLER WILL COMMUNICATE ALL SIGNALS TO FCS.

"PRIORITY DRAWING"

NO	DATE	CLASS REV	ADC	DESCRIPTION	DWN	DES	CHKD	SUB	APP

AECOM

RLWTF-UP LOW LEVEL WASTE SUBPROJECT

HEATING WATER SYTEM P&ID

BLDG. 251 TA-50

DRAWN	V DAVISON
DESIGN	B SHREEVE
CHECKED	C MOYERS
DATE	5/6/14

SUBMITTED MANNY TARIN

APPROVED FOR RELEASE ED ARTIGLIA

Los Alamos NATIONAL LABORATORY PO Box 1663 Los Alamos, New Mexico 87545

SHEET M-6205

78 OF 118

CLASSIFICATION | REVIEWER | DATE

PROJECT ID 100761 | DRAWING NO C55865 | REV 0

05-08-14

File Location: P:\RLWTF LOW-LEVEL WASTE FACILITY\500 CAD\C55865 CUB\SHEETS\15 MECHANICAL\55865-M-6205-RO.DWG
Plotted By: DAVISON, VANESSA; Plot Date: Friday, May 02, 2014

12563

CHILLER PLANT

THERE IS ONE CHILLED WATER PLANT SERVING THE LLW TREATMENT BUILDING AND LLW UTILITY BUILDING IN A PRIMARY/SECONDARY ARRANGEMENT. THE PLANT CONSISTS OF THREE AIR-COOLED SCROLL CHILLERS (LEAD/LAG AND STANDBY), TWO CHILLED WATER PUMPS (LEAD/STANDBY), TWO PROCESS COOLING WATER PUMPS (LEAD/STANDBY), AND A CHILLED WATER TO PROCESS COOLING WATER HEAT EXCHANGER. THE CHILLER MANAGER WILL SELECT THE NUMBER OF CHILLERS REQUIRED AS WELL AS WHICH PUMPS ARE OPERATIONAL. EACH CHILLER HAS ITS OWN CHILLED WATER PUMP.

THE CHILLER MANAGER WILL DETERMINE WHICH CHILLERS WILL OPERATE BASED ON TONNAGE OR FAILED CONDITION.

A HARDWIRED CONNECTION BETWEEN THE CHILLER CONTROLLER AND THE CHILLER MANAGER WILL BE USED FOR OPENING THE CHILLER ISOLATION VALVE, INITIATING THE START OF THE CHILLERS AND DETERMINATION OF THE STATUS OF A CHILLERS CONDITION IN RESPECT TO ITS RECEIVED COMMAND.

A GRAPHIC WILL DISPLAY THE STATUS OF THE CHILLER PLANT'S STATUS.

CHILLED WATER SYSTEM – CHILLER MANAGER – RUN CONDITIONS:
THE CHILLED WATER SYSTEM SHALL BE ENABLED TO RUN WHENEVER:

- A DEFINABLE NUMBER OF CHILLED WATER COILS NEED COOLING.
- A CHILLED WATER PUMP IS OPERATING.
- THE PROCESS COOLING WATER SYSTEM NEEDS COOLING. (HEAT EXCHANGER CHILLED WATER CONTROL VALVE OPEN)

TO PREVENT SHORT CYCLING, THE CHILLER MANAGER SHALL RUN FOR AND BE OFF FOR MINIMUM ADJUSTABLE TIMES (BOTH USER DEFINABLE).

EACH CHILLER SHALL RUN SUBJECT TO ITS OWN INTERNAL SAFETIES AND CONTROLS.

CHILLER STAGING – THREE EQUAL SIZED CHILLERS RUNNING IN PARALLEL: (CWR-5201, CWR-5202 AND CWR-5203)
THIS SECTION REFERS TO THE STAGING AND SEQUENCING OF EACH CHILLER "TRAIN". THE SEQUENCE OF OPERATION FOR EACH INDIVIDUAL CHILLER AND ITS ASSOCIATED SUPPORT EQUIPMENT (SUCH AS PUMPS) IS NOT INCLUDED IN THIS SECTION.

THE CONTROLLER SHALL DETERMINE THE FACILITY COOLING LOAD AND SHALL STAGE THE CHILLERS ON IN SEQUENCE TO MEET RISING COOLING DEMAND AND RISING MAIN CHWS TEMPERATURE WHERE:

- LOAD (IN TONS REFRIGERATION) = [CHWR TEMP (DEGREES F) – CHWS TEMP (DEGREES F)] X FLOW (GPM)] / 26.6.
- LOAD (IN KW REFRIGERATION) = [CHWR TEMP (DEGREES C) – CHWS TEMP (DEGREES C)] X FLOW (LITERS/MIN)] / 15.92
- UNITS SHALL BE CONVERTED AS REQUIRED TO REFLECT ACTUAL SYSTEM OF UNITS USED (METRIC OR ENGLISH)
- MAIN CHWS TEMPERATURE IS MEASURED AT A POINT LEAVING THE CHILLER PLANT AND ENTERING THE FACILITY. THIS POINT SHALL BE DOWNSTREAM AND COMMON TO ALL CHILLERS.

THE CONTROLLER SHALL DETERMINE THE FACILITY COOLING LOAD FROM:

- CHWS FLOW (MAIN CHWS LEAVING CHILLER PLANT), FI-5240
- CHWS TEMPERATURE (MAIN CHWS LEAVING CHILLER PLANT), TI-5241
- CHWR TEMPERATURE (MAIN CHWR RETURNING TO CHILLER PLANT), TI-5248

THE FOLLOWING SETPOINTS ARE RECOMMENDED VALUES. ALL SETPOINTS SHALL BE FIELD ADJUSTED DURING THE COMMISSIONING PERIOD TO MEET THE REQUIREMENTS OF ACTUAL FIELD CONDITIONS.

THE LEAD CHILLER TRAIN AND PUMP SHALL RUN ANYTIME THE CHILLER MANAGER IS ENABLED. ADDITIONAL CHILLERS AND PUMPS SHALL STAGE ON AS FOLLOWS. TO PREVENT SHORT CYCLING, THERE SHALL BE A USER DEFINABLE (ADJ.) DELAY BETWEEN STAGES, AND EACH STAGE SHALL HAVE A USER DEFINABLE (ADJ.) MINIMUM RUNTIME.

STAGE ON	2ND CHILLER
IF LOAD RISES ABOVE A SETPOINT* OF:	44 TONS
AND CHILLED WATER SUPPLY FLOW RISES ABOVE	85 GPM
OR CHWS TEMP RISES ABOVE SETPOINT OF:	50°F
STAGE OFF	**2ND CHILLER**
WHEN LOAD DROPS BELOW ITS SETPOINT* BY:	10 TONS
AND CWS TEMP DROPS BELOW SETPOINT BY:	3°F
AND CHILLED WATER SUPPLY FLOW DROPS BELOW	95 GPM

*BASED ON A PERCENTAGE OF THE RUNNING CHILLER(S) COMBINED CAPACITY (ADJ. SETPOINTS).

THE CHILLER AND STAGING ORDER SHALL BE USER DEFINABLE. THE DESIGNATED LEAD, SECOND AND THIRD CHILLER ORDER (USER DEFINABLE) SHALL ROTATE UPON ONE OF THE FOLLOWING CONDITIONS (USER SELECTABLE):

- MANUALLY THROUGH A SOFTWARE SWITCH
- IF CHILLER RUNTIME (ADJ.) IS EXCEEDED
- DAILY
- WEEKLY
- MONTHLY

EACH CHILLER SHALL RUN SUBJECT TO ITS OWN INTERNAL SAFETIES AND CONTROLS. ON FAILURE OF ANY CHILLER, THE FAILED CHILLER SHALL BE "REMOVED" FROM OPERATION AND THE NEXT AVAILABLE PIECE OF EQUIPMENT AS DEFINED BY THE USER SHALL BE STAGED ON IN ITS PLACE.

ALARMS SHALL BE PROVIDED AS FOLLOWS:

- CHILLER 1 FAILURE: COMMANDED ON, BUT THE STATUS IS OFF.
- CHILLER 2 FAILURE: COMMANDED ON, BUT THE STATUS IS OFF.
- CHILLER 3 FAILURE: COMMANDED ON, BUT THE STATUS IS OFF.
- HIGH MAIN CHILLED WATER SUPPLY TEMP: IF THE MAIN CHILLED WATER SUPPLY TEMPERATURE IS GREATER THAN 50°F (ADJ.).
- LOW MAIN CHILLED WATER SUPPLY TEMP: IF THE MAIN CHILLED WATER SUPPLY TEMPERATURE IS LESS THAN 38°F (ADJ.).
- HIGH MAIN CHILLED WATER RETURN TEMP: IF THE MAIN CHILLED WATER RETURN TEMPERATURE IS GREATER THAN 60°F (ADJ.).
- MAIN CHILLED WATER RETURN TEMP: IF THE MAIN CHILLED WATER RETURN TEMPERATURE IS LESS THAN 45°F (ADJ.).

	HARDWARE POINTS				SOFTWARE POINTS					
POINT NAME	AI	AO	BI	BO	AV	BV	SCHED	TREND	ALARM	SHOW ON GRAPHIC
MAIN CHILLED WATER SUPPLY TEMP	X							X		X
MAIN CHILLED WATER RETURN TEMP	X							X		X
MAIN CHILLED WATER SUPPLY FLOW	X							X		X
CHILLER 1 FAILURE									X	X
CHILLER 2 FAILURE									X	X
CHILLER 3 FAILURE									X	X
HIGH MAIN CHILLED WATER SUPPLY TEMP									X	
LOW MAIN CHILLED WATER SUPPLY TEMP									X	
HIGH MAIN CHILLED WATER RETURN TEMP									X	
LOW MAIN CHILLED WATER RETURN TEMP									X	
TOTALS	3	0	0	0	0	0	0	3	7	6

TOTAL HARDWARE (3) TOTAL SOFTWARE (10)

CHILLED WATER PUMP SYSTEM – RUN CONDITIONS: (PCW-5211 AND PCW-5212)

THE CHILLED WATER PUMPS SHALL BE ENABLED WHENEVER:

- A CHILLED WATER COIL NEEDS COOLING.
- THE PROCESS COOLING WATER SYSTEM NEEDS COOLING. (HEAT EXCHANGER CHILLED WATER CONTROL VALVE OPEN)
- OR THE OUTSIDE AIR TEMPERATURE IS GREATER THAN 54°F (ADJ.).

TO PREVENT SHORT CYCLING, THE CHILLED WATER PUMP SYSTEM SHALL RUN FOR AND BE OFF FOR MINIMUM ADJUSTABLE TIMES (BOTH USER DEFINABLE).

THE PUMPS SHALL RUN FOR FREEZE PROTECTION ANYTIME THE OUTSIDE AIR TEMPERATURE IS LESS THAN 38°F (ADJ.).

CHILLED WATER PUMP VARIABLE FLOW RATE CONTROL

PUMP SPEED IS CONTROLLED TO MAINTAIN PIPE PRESSURE AT SETPOINT AS SENSED AT A PRESSURE SENSOR NEAR (PT-5215) PUMP (AT FAST SCAN RATE). THIS SETPOINT IS UPDATED (AT A SLOWER RATE) BY REMOTE PRESSURE SENSOR (PT-5210) NOTE: THE PRESSURES AT THE TWO SENSORS ARE NOT THE SAME DUE TO SENSOR LOCATION IN PIPING SYSTEM. OBTAIN VALUES FROM TEST AND BALANCE CONTRACTOR.

ENSURE THAT THE PRESSURE SIGNAL IS COMMUNICATED QUICKLY TO THE CONTROL LOOP (AND NOT DELAYED DUE TO NETWORK TIMING) AND THAT A DEFAULT VALUE IS SET IN THE EVENT OF A NETWORK FAILURE.

CONTROL PIPE PRESSURE AT PUMP

INITIATE START PUMP COMMAND BEFORE SIGNAL SENT TO VFD

RUN TIMER SHOULD LIMIT INITIAL START UP TO 50% FULL POWER (RAMP UP WITHOUT OVERSHOOTING)

RAMP-UP AND RAMP-DOWN INCREMENTAL CHANGES SHALL BE EQUAL.

USE PID LOOP TO CONTROL PUMP SPEED BASED ON PRESSURE SETPOINT.

VARIABLE SPEED DRIVE ACCELERATION SETTINGS, DECELERATION SETTINGS, MINIMUM SPEEDS, ETC. SHALL BE ADJUSTED AT START UP IN COORDINATION WITH THE DRIVE SUPPLIER AND INSTALLER TO ACHIEVE STABLE CONTROL FOR OPTIMAL SYSTEM PERFORMANCE.

MOTOR SPEED SHALL NOT BE RESET TO 0 HZ FOR AT LEAST FIVE (5) MINUTES (INITIAL, TO BE SET PER MANUFACTURER'S REQUIREMENTS) AFTER CHILLER SHUT-DOWN.

(CONTINUED ON M-6207)

NO	DATE	CLASS REV	ADC	DESCRIPTION	DWN	DES	CHKD	SUB	APP

AECOM

RLWTF-UP LOW LEVEL WASTE SUBPROJECT

CHILLED WATER SYSTEM SEQUENCE OF OPERATIONS

BLDG. 251 TA-50

DRAWN	V DAVISON
DESIGN	B SHREEVE
CHECKED	C MOYERS
DATE	5/8/14

SUBMITTED MANNY TARIN

APPROVED FOR RELEASE ED ARTIGLIA

Los Alamos NATIONAL LABORATORY PO Box 1663 Los Alamos, New Mexico 87545

SHEET M-6206

79 OF 118

CLASSIFICATION REVIEWER DATE

PROJECT ID 100761

DRAWING NO C55865

REV 0

CHARLES MOYERS NEW MEXICO 16838 REGISTERED PROFESSIONAL ENGINEER 05-07-14

ENGINEERING
File Location: P:\RLWTF LOW-LEVEL WASTE FACILITY\300 CAD\C55865 CUR\SHEETS\19 MECHANICAL\55865-M-6206-R0.DWG
Plotted By: DAVISON, VANESSA Plot Date: Friday, May 02, 2014

(CONTINUED FROM M-6206)

CHILLED WATER PUMP LEAD/STANDBY OPERATION:

THE TWO CHILLED WATER PUMPS SHALL OPERATE IN A LEAD/STANDBY FASHION.

- THE LEAD PUMP SHALL RUN FIRST.
- ON FAILURE OF THE LEAD PUMP, THE STANDBY PUMP SHALL RUN AND THE LEAD PUMP SHALL TURN OFF.

THE DESIGNATED LEAD PUMP SHALL ROTATE UPON ONE OF THE FOLLOWING CONDITIONS (USER SELECTABLE):

- MANUALLY THROUGH A SOFTWARE SWITCH
- IF PUMP RUNTIME (ADJ.) IS EXCEEDED
- DAILY
- WEEKLY
- MONTHLY

ALARMS SHALL BE PROVIDED AS FOLLOWS:

- CHILLED WATER PUMP 1
  - FAILURE: COMMANDED ON, BUT THE STATUS IS OFF.
  - RUNNING IN HAND: COMMANDED OFF, BUT THE STATUS IS ON.
  - RUNTIME EXCEEDED: STATUS RUNTIME EXCEEDS A USER DEFINABLE LIMIT.
- CHILLED WATER PUMP 2
  - FAILURE: COMMANDED ON, BUT THE STATUS IS OFF.
  - RUNNING IN HAND: COMMANDED OFF, BUT THE STATUS IS ON.
  - RUNTIME EXCEEDED: STATUS RUNTIME EXCEEDS A USER DEFINABLE LIMIT.

CHILLED WATER TEMPERATURE MONITORING:

THE FOLLOWING TEMPERATURES SHALL BE MONITORED:

- CHILLED WATER SUPPLY.
- CHILLED WATER RETURN.

ALARMS SHALL BE PROVIDED AS FOLLOWS:

- HIGH CHILLED WATER SUPPLY TEMP: IF THE CHILLED WATER SUPPLY TEMPERATURE IS GREATER THAN 55°F (ADJ.).
- LOW CHILLED WATER SUPPLY TEMP: IF THE CHILLED WATER SUPPLY TEMPERATURE IS LESS THAN 38°F (ADJ.).

PROCESS COOLING WATER PUMP SYSTEM – RUN CONDITIONS: (PCW-5213 AND PCW-5214)

THE PROCESS COOLING WATER PUMPS SHALL RUN CONTINUOUSLY:

TO PREVENT SHORT CYCLING, THE PROCESS COOLING WATER PUMP SYSTEM SHALL RUN FOR AND BE OFF FOR MINIMUM ADJUSTABLE TIMES (BOTH USER DEFINABLE).

THE PUMPS SHALL RUN FOR FREEZE PROTECTION ANYTIME THE OUTSIDE AIR TEMPERATURE IS LESS THAN 38°F (ADJ.).

PROCESS COOLING WATER PUMP LEAD/STANDBY OPERATION:

THE TWO PROCESS COOLING WATER PUMPS SHALL OPERATE IN A LEAD/STANDBY FASHION.

- THE LEAD PUMP SHALL RUN FIRST.
- ON FAILURE OF THE LEAD PUMP, THE STANDBY PUMP SHALL RUN AND THE LEAD PUMP SHALL TURN OFF.

THE DESIGNATED LEAD PUMP SHALL ROTATE UPON ONE OF THE FOLLOWING CONDITIONS (USER SELECTABLE):

- MANUALLY THROUGH A SOFTWARE SWITCH
- IF PUMP RUNTIME (ADJ.) IS EXCEEDED
- DAILY
- WEEKLY
- MONTHLY

ALARMS SHALL BE PROVIDED AS FOLLOWS:

- PROCESS COOLING WATER PUMP 1
  - FAILURE: COMMANDED ON, BUT THE STATUS IS OFF.
  - RUNNING IN HAND: COMMANDED OFF, BUT THE STATUS IS ON.
  - RUNTIME EXCEEDED: STATUS RUNTIME EXCEEDS A USER DEFINABLE LIMIT.
- PROCESS COOLING WATER PUMP 2
  - FAILURE: COMMANDED ON, BUT THE STATUS IS OFF.
  - RUNNING IN HAND: COMMANDED OFF, BUT THE STATUS IS ON.
  - RUNTIME EXCEEDED: STATUS RUNTIME EXCEEDS A USER DEFINABLE LIMIT.

PROCESS COOLING WATER TEMPERATURE MONITORING:
THE FOLLOWING TEMPERATURES SHALL BE MONITORED:

- PROCESS COOLING WATER SUPPLY.
- PROCESS COOLING WATER RETURN.

ALARMS SHALL BE PROVIDED AS FOLLOWS:

- HIGH CHILLED WATER SUPPLY TEMP: IF THE PROCESS COOLING WATER SUPPLY TEMPERATURE IS GREATER THAN 65°F (ADJ.).
- LOW CHILLED WATER SUPPLY TEMP: IF THE PROCESS COOLING WATER SUPPLY TEMPERATURE IS LESS THAN 38°F (ADJ.).

PROCESS COOLING WATER SUPPLY TEMPERATURE SHALL BE CONTROLLED BY MODULATING THE HEAT EXCHANGER CHILLED WATER VALVE (MOV-5209). THE PROCESS COOLING WATER SUPPLY SET-POINT SHALL BE 60 °F (ADJ.).

	HARDWARE POINTS				SOFTWARE POINTS					
POINT NAME	AI	AO	BI	BO	AV	BV	SCHED	TREND	ALARM	SHOW ON GRAPHIC
CHILLED WATER SUPPLY TEMP	X							X		X
CHILLED WATER RETURN TEMP	X							X		X
PROCESS CHILLED WATER SUPPLY TEMP	X							X		X
PROCESS CHILLED WATER RETURN TEMP	X							X		X
CHILLED WATER PUMP 1 STATUS			X					X		X
CHILLED WATER PUMP 2 STATUS			X					X		X
CHILLED WATER PUMP 1 START/STOP				X				X		X
CHILLED WATER PUMP 2 START/STOP				X				X		X
CHILLED WATER PUMP 1 FAILURE									X	
CHILLED WATER PUMP 2 FAILURE									X	
CHILLED WATER PUMP 1 RUNNING IN HAND									X	
CHILLED WATER PUMP 2 RUNNING IN HAND									X	
CHILLED WATER PUMP 1 RUNTIME EXCEEDED									X	
CHILLED WATER PUMP 2 RUNTIME EXCEEDED									X	
CHWS PUMP DISCHARGE PRESSURE	X									X
REMOTE CHWS PRESSURE	X									X
PROCESS COOLING WATER PUMP 1 STATUS			X					X		X
PROCESS COOLING WATER PUMP 2 STATUS			X					X		X
PROCESS COOLING WATER PUMP 1 START/STOP				X				X		X
PROCESS COOLING WATER PUMP 2 START/STOP				X				X		X
PROCESS COOLING WATER PUMP 1 FAILURE									X	
PROCESS COOLING WATER PUMP 2 FAILURE									X	
PROCESS COOLING WATER PUMP 1 RUNNING IN HAND									X	
PROCESS COOLING WATER PUMP 2 RUNNING IN HAND									X	
PROCESS COOLING WATER PUMP 1 RUNTIME EXCEEDED									X	
PROCESS COOLING WATER PUMP 2 RUNTIME EXCEEDED									X	
HIGH CHILLED WATER SUPPLY TEMP									X	
LOW CHILLED WATER SUPPLY TEMP									X	
HIGH PROCESS COOLING WATER SUPPLY TEMP									X	
LOW PROCESS COOLING WATER SUPPLY TEMP									X	
TOTALS	6	0	4	4	0	0	0	12	16	14

TOTAL HARDWARE (14) TOTAL SOFTWARE (28)

NO	DATE	CLASS REV	ADC	DESCRIPTION	DWN	DES	CHKD	SUB	APP

AECOM

RLWTF-UP LOW LEVEL WASTE SUBPROJECT

CHILLED WATER SYSTEM SEQUENCE OF OPERATIONS

BLDG. 251 TA-50

DRAWN	V DAVISON
DESIGN	B SHREEVE
CHECKED	C MOYERS
DATE	5/8/14

SUBMITTED MANNY TARIN

APPROVED FOR RELEASE ED ARTIOLIA

Los Alamos NATIONAL LABORATORY PO Box 1663 Los Alamos, New Mexico 87545

SHEET M-6207

80 OF 118

CLASSIFICATION REVIEWER DATE

PROJECT ID 100761

DRAWING NO C55865

REV 0

CHARLES MOYERS 15838 REGISTERED PROFESSIONAL ENGINEER STATE OF NEW MEXICO 05-08-14

C55865

File Location: P:\RLWTF LOW-LEVEL WASTE FACILITY\300 CAD\C55865 CAD\SHEETS\13 MECHANICAL\55865-M-6207-R0.DWG

Plotted By: DAVISON, VANESSA Plot Date: Friday, May 02, 2014

HEATING WATER PLANT

THERE IS ONE HEATING WATER PLANT SERVING THE LLW TREATMENT BUILDING AND LLW UTILITY BUILDING. THE PLANT CONSISTS OF TWO FUEL-FIRED HOT WATER BOILERS, TWO HEATING WATER PRIMARY PUMPS (BOILER CIRCULATION PUMPS), AND TWO SECONDARY HEATING WATER PUMPS (LEAD/STANDBY). THE CONTROL SYSTEM WILL SELECT THE NUMBER OF HOT WATER BOILERS REQUIRED AS WELL AS WHICH PUMPS ARE OPERATIONAL.

A HARDWIRED CONNECTION BETWEEN THE BOILER CONTROLLER AND THE CONTROL SYSTEM WILL BE USED FOR STARTING THE ASSOCIATED HOT WATER BOILER PRIMARY PUMP, INITIATING THE START OF THE HOT WATER BOILERS AND DETERMINATION OF THE STATUS OF THE HOT WATER BOILER CONDITION IN RESPECT TO ITS RECEIVED COMMAND.

A GRAPHIC WILL DISPLAY THE STATUS OF THE HEATING WATER PLANT'S STATUS.

BOILER SYSTEM RUN CONDITIONS: (BHW-5101 AND BHW-5102)
THE BOILER SYSTEM SHALL BE ENABLED TO RUN WHENEVER:

- A DEFINABLE NUMBER OF HOT WATER COILS NEED HEATING.
- AND OUTSIDE AIR TEMPERATURE IS LESS THAN 65°F (ADJ.).

TO PREVENT SHORT CYCLING, THE BOILER SYSTEM SHALL RUN FOR AND BE OFF FOR MINIMUM ADJUSTABLE TIMES (BOTH USER DEFINABLE), UNLESS SHUTDOWN ON SAFETIES OR OUTSIDE AIR CONDITIONS.

THE BOILER SHALL RUN SUBJECT TO ITS OWN INTERNAL SAFETIES AND CONTROLS.

THE BOILER SYSTEM SHALL ALSO RUN FOR FREEZE PROTECTION WHENEVER THE OUTSIDE AIR TEMPERATURE IS LESS THAN 38°F (ADJ.).

BOILER 1 SAFETIES:
THE FOLLOWING SAFETIES SHALL BE MONITORED:

- BOILER ALARM.
- LOW WATER LEVEL.

ALARMS SHALL BE PROVIDED AS FOLLOWS:

- BOILER ALARM.
- LOW WATER LEVEL ALARM.

BOILER 2 SAFETIES:

THE FOLLOWING SAFETIES SHALL BE MONITORED:

- BOILER ALARM.
- LOW WATER LEVEL.

ALARMS SHALL BE PROVIDED AS FOLLOWS:

- BOILER ALARM.
- LOW WATER LEVEL ALARM.

PRIMARY (CIRCULATION) PUMPS (PHW-5110 AND PHW-5111)

PRIMARY (CIRCULATION) PUMP 1:
THE CIRCULATION PUMP 1 SHALL RUN ANYTIME BOILER 1 IS CALLED TO RUN AND SHALL HAVE A USER DEFINABLE DELAY (ADJ.) ON STOP.

ALARMS SHALL BE PROVIDED AS FOLLOWS:

- CIRCULATION PUMP 1 FAILURE: COMMANDED ON, BUT THE STATUS IS OFF.
- CIRCULATION PUMP 1 RUNNING IN HAND: COMMANDED OFF, BUT THE STATUS IS ON.
- CIRCULATION PUMP 1 RUNTIME EXCEEDED: STATUS RUNTIME EXCEEDS A USER-DEFINABLE LIMIT.

PRIMARY (CIRCULATION) PUMP 2:

THE CIRCULATION PUMP 2 SHALL RUN ANYTIME BOILER 2 IS CALLED TO RUN AND SHALL HAVE A USER DEFINABLE DELAY (ADJ.) ON STOP.

ALARMS SHALL BE PROVIDED AS FOLLOWS:

- CIRCULATION PUMP 2 FAILURE: COMMANDED ON, BUT THE STATUS IS OFF.
- CIRCULATION PUMP 2 RUNNING IN HAND: COMMANDED OFF, BUT THE STATUS IS ON.
- CIRCULATION PUMP 2 RUNTIME EXCEEDED: STATUS RUNTIME EXCEEDS A USER-DEFINABLE LIMIT.

BOILER LEAD/STANDBY OPERATION:
THE TWO BOILERS SHALL OPERATE IN A STAGED LEAD/STANDBY FASHION WHEN CALLED TO RUN AND FLOW IS PROVEN.

- THE LEAD BOILER SHALL RUN FIRST.
- ON FAILURE OF THE LEAD BOILER, THE STANDBY BOILER SHALL RUN AND THE LEAD BOILER SHALL TURN OFF.
- THE LEAD BOILER AND STANDBY BOILER SHALL RUN IN A STAGED OPERATION AS FOLLOWS:

THE CONTROL SYSTEM SHALL DETERMINE THE FACILITY HEATING LOAD AND SHALL STAGE THE BOILERS ON IN SEQUENCE TO MEET RISING HEATING DEMAND AND FALLING SECONDARY HWS TEMPERATURE WHERE.

- LOAD (IN BTU/HR) = [HWS TEMP (DEGREES F) - HWR TEMP (DEGREES F)] X FLOW (GPM) X 500].

STAGE ON	2ND BOILER
IF LOAD RISES ABOVE A SET POINT OF:	750,000 BTU/HR
AND HEATING WATER SECONDARY SUPPLY FLOW RISES ABOVE	80 GPM
OR SECONDARY HWS TEMP FALLS BELOW SET POINT BY:	10°F

STAGE OFF	2ND BOILER
WHEN SECONDARY HWS TEMP RISES ABOVE SET POINT BY:	10°F
AND HEATING WATER SECONDARY SUPPLY FLOW DROPS BELOW	75 GPM

THE DESIGNATED LEAD BOILER SHALL ROTATE UPON ONE OF THE FOLLOWING CONDITIONS: (USER SELECTABLE):

- MANUALLY THROUGH A SOFTWARE SWITCH
- IF BOILER RUNTIME (ADJ.) IS EXCEEDED
- DAILY
- WEEKLY
- MONTHLY

ALARMS SHALL BE PROVIDED AS FOLLOWS:

- BOILER 1
  - FAILURE: COMMANDED ON BUT THE STATUS IS OFF.
  - RUNNING IN HAND: COMMANDED OFF BUT THE STATUS IS ON.
  - RUNTIME EXCEEDED: STATUS RUNTIME EXCEEDS A USER DEFINABLE LIMIT.
- BOILER 2
  - FAILURE: COMMANDED ON BUT THE STATUS IS OFF.
  - RUNNING IN HAND: COMMANDED OFF BUT THE STATUS IS ON.
  - RUNTIME EXCEEDED: STATUS RUNTIME EXCEEDS A USER DEFINABLE LIMIT.
- LEAD BOILER FAILURE: THE LEAD BOILER IS IN FAILURE AND THE STANDBY BOILER IS ON.

HOT WATER SUPPLY TEMPERATURE SET POINT RESET:
THE HOT WATER SUPPLY TEMPERATURE SET POINT SHALL RESET BASED ON OUTSIDE AIR TEMPERATURE.

AS OUTSIDE AIR TEMPERATURE RISES FROM 0°F (ADJ.) TO 70°F (ADJ.) THE HOT WATER SUPPLY TEMPERATURE SET POINT SHALL RESET DOWNWARDS BY SUBTRACTING FROM 0°F (ADJ.) TO 20°F (ADJ.) FROM THE CURRENT BOILER SET POINT.

PRIMARY HOT WATER TEMPERATURE MONITORING:
THE FOLLOWING TEMPERATURES SHALL BE MONITORED:

- PRIMARY HOT WATER SUPPLY.
- PRIMARY HOT WATER RETURN.

ALARMS SHALL BE PROVIDED AS FOLLOWS:

- HIGH PRIMARY HOT WATER SUPPLY TEMP: IF GREATER THAN 200°F (ADJ.).
- LOW PRIMARY HOT WATER SUPPLY TEMP: IF LESS THAN 100°F (ADJ.).

BOILER 1 HOT WATER TEMPERATURE MONITORING:
THE FOLLOWING TEMPERATURES SHALL BE MONITORED:

- BOILER 1 HOT WATER SUPPLY.
- BOILER 1 HOT WATER RETURN.

ALARMS SHALL BE PROVIDED AS FOLLOWS:

- HIGH HOT WATER SUPPLY TEMP: IF GREATER THAN 200°F (ADJ.).
- LOW HOT WATER SUPPLY TEMP: IF LESS THAN 100°F (ADJ.).

BOILER 2 HOT WATER TEMPERATURE MONITORING:
THE FOLLOWING TEMPERATURES SHALL BE MONITORED:

- BOILER 2 HOT WATER SUPPLY.
- BOILER 2 HOT WATER RETURN.

ALARMS SHALL BE PROVIDED AS FOLLOWS:

- HIGH HOT WATER SUPPLY TEMP: IF GREATER THAN 200°F (ADJ.).
- LOW HOT WATER SUPPLY TEMP: IF LESS THAN 100°F (ADJ.).

	HARDWARE POINTS				SOFTWARE POINTS					
POINT NAME	AI	AO	BI	BO	AV	BV	SCHED	TREND	ALARM	SHOW ON GRAPHIC
PRIMARY HOT WATER SUPPLY FLOW	X							X		X
PRIMARY HOT WATER RETURN TEMP	X							X		X
PRIMARY HOT WATER SUPPLY TEMP	X							X		X
BOILER 1 HOT WATER RETURN TEMP	X							X		X
BOILER 1 HOT WATER SUPPLY TEMP	X							X		X
BOILER 2 HOT WATER RETURN TEMP	X							X		X
BOILER 2 HOT WATER SUPPLY TEMP	X							X		X
BOILER 1 HOT WATER SUPPLY TEMP SET POINT RESET		X						X		X
BOILER 2 HOT WATER SUPPLY TEMP SET POINT RESET		X						X		X

(CONTINUED ON M-6209)

NO	DATE	CLASS REV	ADC	DESCRIPTION	DWN	DES	CHKD	SUB	APP

AECOM

RLWTF-UP LOW LEVEL WASTE SUBPROJECT

HEATING WATER SYSTEM SEQUENCE OF OPERATIONS

BLDG. 251 TA-50

DRAWN	V DAVISON
DESIGN	B SHREEVE
CHECKED	C MOYERS
DATE	3/8/14

SUBMITTED MANNY TARIN

APPROVED FOR RELEASE ED ARTIGLIA

Los Alamos NATIONAL LABORATORY PO Box 1663 Los Alamos, New Mexico 87545

SHEET M-6208

81 OF 118

CLASSIFICATION | REVIEWER | DATE

PROJECT ID 100761 | DRAWING NO C55865 | REV 0

CHARLES MOYERS NEW MEXICO 10830 REGISTERED PROFESSIONAL ENGINEER 03-07-14

95527

File Location: P:\RLWTF LOW-LEVEL WASTE FACILITY\300 CAD\C55865 CVR\SHEETS\13 MECHANICAL\55865-M-6208-R0.DWG
Plotted By: DAVISON, VANESSA Plot Date: Friday, May 02, 2014

(CONTINUED FROM M-6208)

POINT NAME	HARDWARE POINTS AI	AO	BI	BO	SOFTWARE POINTS AV	BV	SCHED	TREND	ALARM	SHOW ON GRAPHIC
BOILER 1 ALARM STATUS			X					X	X	X
BOILER 1 LOW WATER LEVEL			X					X	X	X
BOILER 2 ALARM STATUS			X					X	X	X
BOILER 2 LOW WATER LEVEL			X					X	X	X
HOT WATER PUMP 1 STATUS			X					X		X
HOT WATER PUMP 2 STATUS			X					X		X
CIRCULATION PUMP 1 STATUS			X					X		X
CIRCULATION PUMP 2 STATUS			X					X		X
BOILER 1 STATUS			X					X		X
BOILER 2 STATUS			X					X		X
HOT WATER PUMP 1 START/STOP				X						X
HOT WATER PUMP 2 START/STOP				X						X
CIRCULATION PUMP 1 START/STOP				X				X		X
CIRCULATION PUMP 2 START/STOP				X				X		X
BOILER 1 ENABLE				X						X
BOILER 2 ENABLE				X						X
OUTSIDE AIR TEMP					X					X
HOT WATER PUMP 2 RUNTIME EXCEEDED									X	
HOT WATER PUMP 1 FAILURE									X	
HOT WATER PUMP 1 RUNNING IN HAND									X	
HOT WATER PUMP 1 RUNTIME EXCEEDED									X	
HOT WATER PUMP 2 FAILURE									X	
HOT WATER PUMP 2 RUNNING IN HAND									X	
CIRCULATION PUMP 1 FAILURE									X	
CIRCULATION PUMP 1 RUNNING IN HAND									X	
CIRCULATION PUMP 1 RUNTIME EXCEEDED									X	
CIRCULATION PUMP 2 FAILURE									X	
CIRCULATION PUMP 2 RUNNING IN HAND									X	
CIRCULATION PUMP 2 RUNTIME EXCEEDED									X	
BOILER 1 FAILURE									X	
BOILER 2 FAILURE									X	
BOILER 1 RUNNING IN HAND									X	
BOILER 2 RUNNING IN HAND									X	
LEAD BOILER FAILURE									X	X
BOILER 1 RUNTIME EXCEEDED									X	
BOILER 2 RUNTIME EXCEEDED									X	
HIGH PRIMARY HOT WATER SUPPLY TEMP									X	
LOW PRIMARY HOT WATER SUPPLY TEMP									X	
BOILER 1 HIGH HOT WATER SUPPLY TEMP									X	
BOILER 1 LOW HOT WATER SUPPLY TEMP									X	
BOILER 2 HIGH HOT WATER SUPPLY TEMP									X	
BOILER 2 LOW HOT WATER SUPPLY TEMP									X	
TOTALS	7	2	10	6	1	0	0	21	29	25

TOTAL HARDWARE (25) TOTAL SOFTWARE (51)

SECONDARY HOT WATER PUMP RUN CONDITIONS: (PHW-5105 AND PHW-5106)
THE HOT WATER PUMPS SHALL BE ENABLED WHENEVER:

- A DEFINABLE NUMBER OF HOT WATER COILS NEED HEATING.
- AND OUTSIDE AIR TEMPERATURE IS LESS THAN 54°F (ADJ.).

THE PUMPS SHALL RUN FOR FREEZE PROTECTION ANYTIME OUTSIDE AIR TEMPERATURE IS LESS THAN 38°F (ADJ.).

TO PREVENT SHORT CYCLING, THE PUMP SHALL RUN FOR A MINIMUM TIME AND BE OFF FOR A MINIMUM TIME (BOTH USER ADJUSTABLE).

SECONDARY HOT WATER PUMP LEAD/STANDBY OPERATION:
THE TWO HOT WATER PUMPS SHALL OPERATE IN A LEAD/STANDBY FASHION.

- THE LEAD PUMP SHALL RUN FIRST.
- ON FAILURE OF THE LEAD PUMP, THE STANDBY PUMP SHALL RUN AND THE LEAD PUMP SHALL TURN OFF.

THE DESIGNATED LEAD PUMP SHALL ROTATE UPON ONE OF THE FOLLOWING CONDITIONS (USER SELECTABLE):

- MANUALLY THROUGH A SOFTWARE SWITCH
- IF PUMP RUNTIME (ADJ.) IS EXCEEDED
- DAILY
- WEEKLY
- MONTHLY

ALARMS SHALL BE PROVIDED AS FOLLOWS:

- SECONDARY HOT WATER PUMP 1
  - FAILURE: COMMANDED ON, BUT THE STATUS IS OFF.
  - RUNNING IN HAND: COMMANDED OFF, BUT THE STATUS IS ON.
  - RUNTIME EXCEEDED: STATUS RUNTIME EXCEEDS A USER DEFINABLE LIMIT.
- SECONDARY HOT WATER PUMP 2
  - FAILURE: COMMANDED ON, BUT THE STATUS IS OFF.
  - RUNNING IN HAND: COMMANDED OFF, BUT THE STATUS IS ON.
  - RUNTIME EXCEEDED: STATUS RUNTIME EXCEEDS A USER DEFINABLE LIMIT.

HOT WATER TEMPERATURE MONITORING:
THE FOLLOWING TEMPERATURES SHALL BE MONITORED:

- HOT WATER SUPPLY.
- HOT WATER RETURN.

ALARMS SHALL BE PROVIDED AS FOLLOWS:

- HIGH HOT WATER SUPPLY TEMP: IF THE HOT WATER SUPPLY TEMPERATURE IS GREATER THAN 200°F (ADJ.).
- LOW HOT WATER SUPPLY TEMP: IF THE HOT WATER SUPPLY TEMPERATURE IS LESS THAN 100°F (ADJ.).

POINT NAME	HARDWARE POINTS AI	AO	BI	BO	SOFTWARE POINTS AV	BV	SCHED	TREND	ALARM	SHOW ON GRAPHIC
HOT WATER RETURN TEMP	X							X		X
HOT WATER SUPPLY TEMP	X							X		X
HOT WATER PUMP 1 STATUS			X					X		X
HOT WATER PUMP 2 STATUS			X					X		X
HOT WATER PUMP 1 START/STOP				X				X		X
HOT WATER PUMP 2 START/STOP				X				X		X
HOT WATER PUMP 1 FAILURE									X	
HOT WATER PUMP 2 FAILURE									X	
HOT WATER PUMP 1 RUNNING IN HAND									X	
HOT WATER PUMP 2 RUNNING IN HAND									X	
HOT WATER PUMP 1 RUNTIME EXCEEDED									X	
HOT WATER PUMP 2 RUNTIME EXCEEDED									X	
HIGH HOT WATER SUPPLY TEMP									X	
LOW HOT WATER SUPPLY TEMP									X	
TOTALS	2	0	2	2	0	0	0	6	8	6

TOTAL HARDWARE (6) TOTAL SOFTWARE (14)

NO	DATE	CLASS REV	ADC	DESCRIPTION	DWN	DES	CHKD	SUB	APP

AECOM

RLWTF-UP LOW LEVEL WASTE SUBPROJECT

HEATING WATER SYSTEM SEQUENCE OF OPERATIONS

BLDG. 251 TA-50

SUBMITTED MANNY TARIN

APPROVED FOR RELEASE ED ARTIGLIA

DRAWN V DAVISON

DESIGN B SHREEVE

CHECKED C MOYERS

DATE 5/6/14

Los Alamos NATIONAL LABORATORY PO Box 1663 Los Alamos, New Mexico 87545

SHEET M-6209

82 OF 118

CLASSIFICATION REVIEWER DATE

PROJECT ID 100761 DRAWING NO C55865 REV 0

CHARLES MOYERS 10838 REGISTERED PROFESSIONAL ENGINEER STATE OF NEW MEXICO 05-09-14

File Location: P:\RLWTF LOW-LEVEL WASTE FACILITY\300 DAS\C55865 CAD\SHEETS\13 MECHANICAL\55865-M-6209-R0.DWG
Plotted By: DAVISON, VANESSA; Plot Date: Friday, May 02, 2014

12597

GENERAL NOTES

1. SEE DRAWING C55864, SHEETS M-7000 THROUGH M-7006 FOR MECHANICAL EQUIPMENT LISTS.
2. INSTALL ALL FLOW INDICATORS WITH A MINIMUM OF STRAIGHT PIPE DIAMETERS UPSTREAM AND 2 STRAIGHT PIPE DIAMETERS DOWNSTREAM.

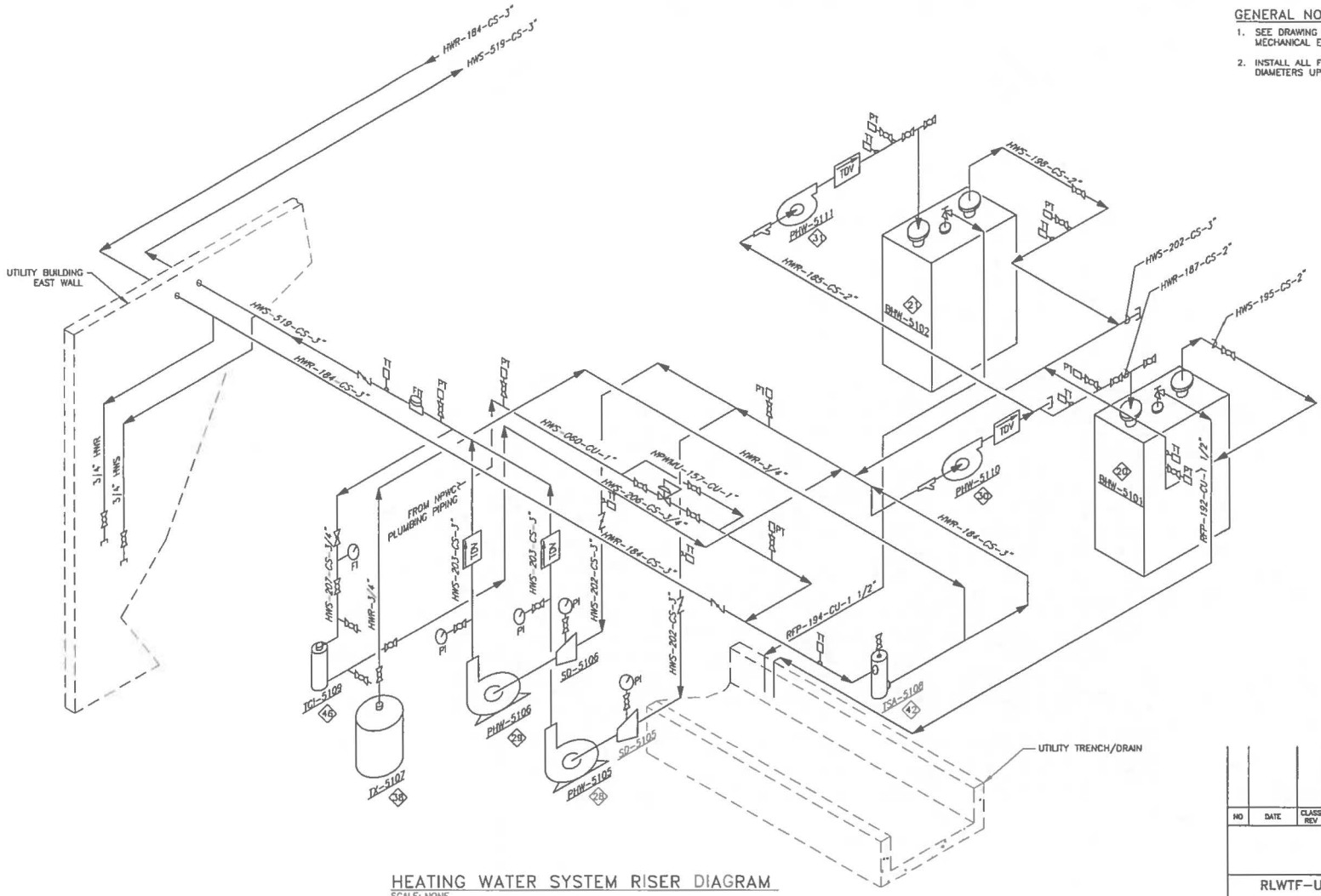

HEATING WATER SYSTEM RISER DIAGRAM
SCALE: NONE

NO	DATE	CLASS REV	ADC	DESCRIPTION	DWN	DES	CHKD	SUB	APP

AECOM

RLWTF-UP LOW LEVEL WASTE SUBPROJECT

HEATING WATER SYSTEM RISER DIAGRAM

BLDG. 251 TA-50

DRAWN	V DAVISON
DESIGN	B SHREEVE
CHECKED	C MOYERS
DATE	5/8/14

SUBMITTED MANNY TARIN

APPROVED FOR RELEASE ED ARTIGLIA

Los Alamos NATIONAL LABORATORY PO Box 1663 Los Alamos, New Mexico 87545

SHEET M-9201

83 OF 118

CLASSIFICATION | REVIEWER | DATE

PROJECT ID 100761 | DRAWING NO C55865 | REV 0

CHARLES MOYERS NEW MEXICO 16830 LICENSED PROFESSIONAL ENGINEER

05-08-14

File Location: P:\RLWTF LOW-LEVEL WASTE FACILITY\500 CAD\C55865 CUB\SHEETS\15 MECHANICAL\55865-M-9201-R0.DWG
Plotted By: DAVISON, VANESSA; Plot Date: Friday, May 02, 2014

12568

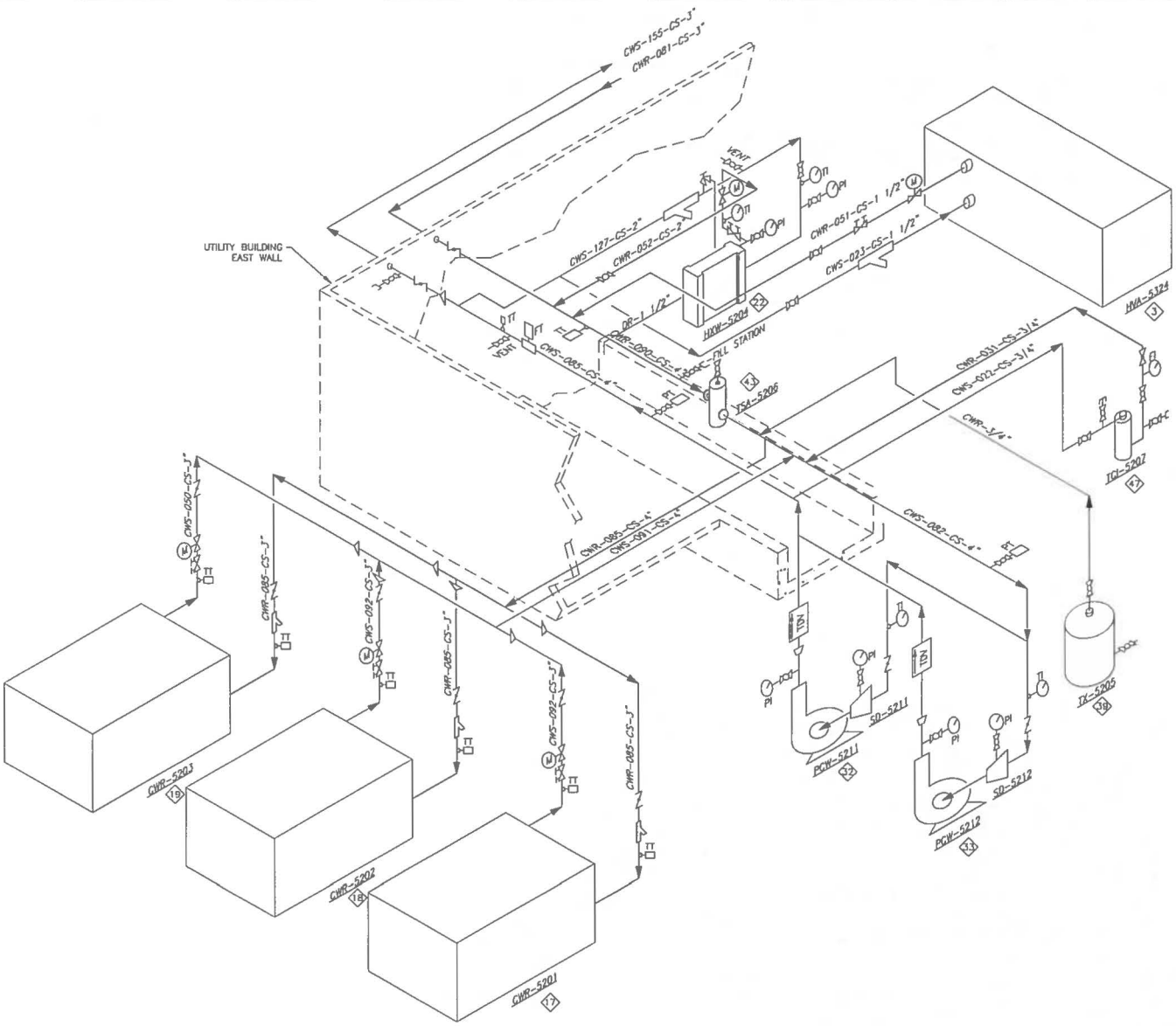

CHILLED WATER SYSTEM RISER DIAGRAM
SCALE: NONE

GENERAL NOTES

1. SEE DRAWING C55864, SHEETS M-7000 THROUGH M-7006 FOR MECHANICAL EQUIPMENT LISTS.
2. INSTALL ALL FLOW INDICATORS WITH A MINIMUM OF STRAIGHT PIPE DIAMETERS UPSTREAM AND 2 STRAIGHT PIPE DIAMETERS DOWNSTREAM.

NO	DATE	CLASS REV	ADC	DESCRIPTION	DWN	DES	CHKD	SUB	APP

AECOM

RLWTF-UP LOW LEVEL WASTE SUBPROJECT

CHILLED WATER SYSTEM RISER DIAGRAM

BLDG. 251 TA-50

DRAWN	V DAVISON
DESIGN	B SHREEVE
CHECKED	C MOYERS
DATE	5/8/14

SUBMITTED: MANNY TARIN
APPROVED FOR RELEASE: ED ARTIGLIA

Los Alamos NATIONAL LABORATORY PO Box 1663 Los Alamos, New Mexico 87545

SHEET M-9202
84 OF 118

CLASSIFICATION | REVIEWER | DATE

PROJECT ID 100761 | DRAWING NO C55865 | REV 0

05-08-14

File Location: P:\RLWTF LOW-LEVEL WASTE FACILITY\500 CAD\C55865 CUB\SHEETS\15 MECHANICAL\55865-M-9202-R0.DWG
Plotted By: DAVISON, VANESSA; Plot Date: Friday, May 02, 2014

12569

GENERAL NOTES

1. SEE DRAWING C55864, SHEETS M-7000 THROUGH M-7006 FOR MECHANICAL EQUIPMENT LISTS.
2. INSTALL ALL FLOW INDICATORS WITH A MINIMUM OF STRAIGHT PIPE DIAMETERS UPSTREAM AND 2 STRAIGHT PIPE DIAMETERS DOWNSTREAM.

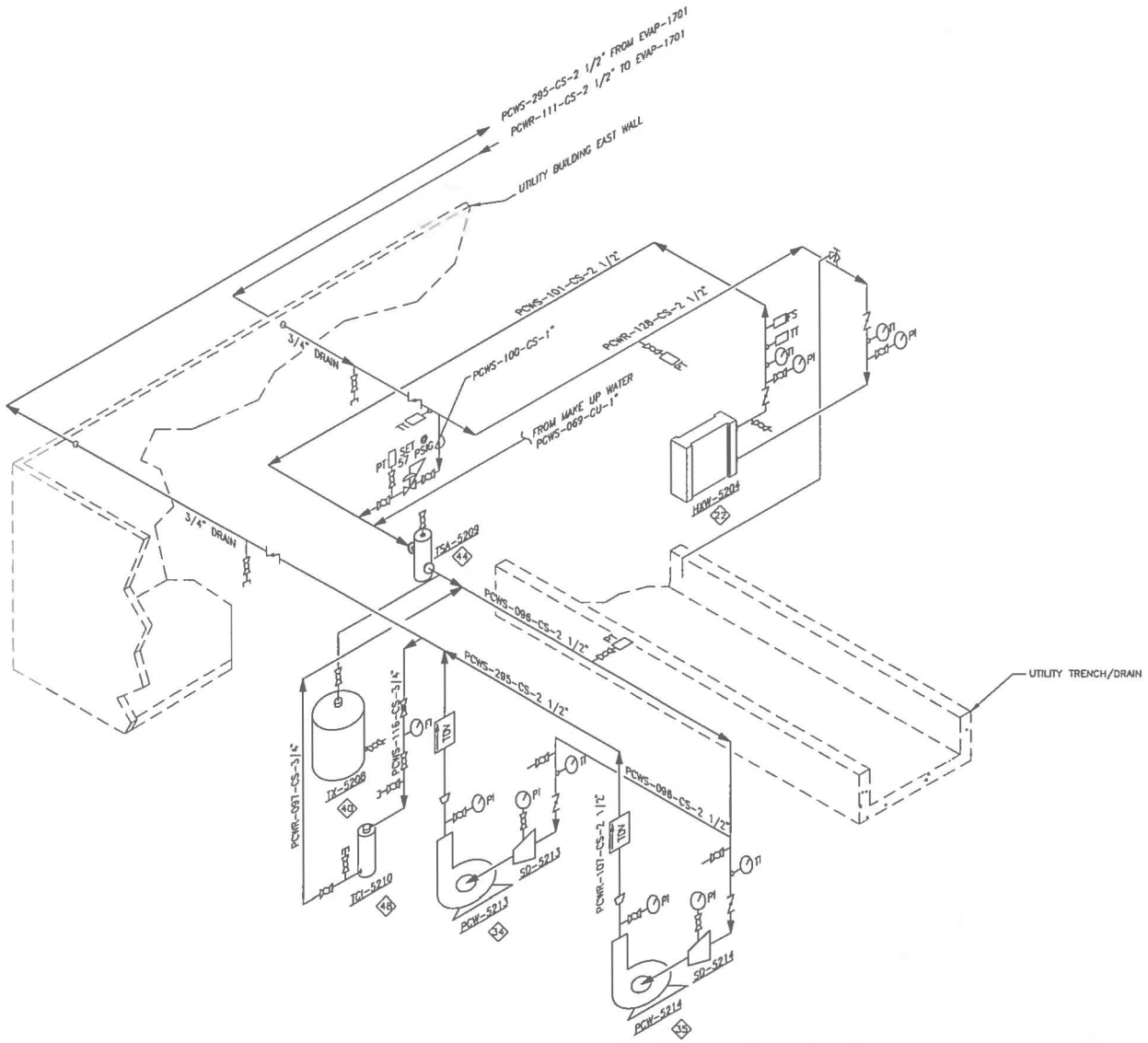

PROCESS COOLING WATER SYSTEM RISER DIAGRAM

SCALE: NONE

NO	DATE	CLASS REV	ADC	DESCRIPTION	DWN	DES	CHKD	SUB	APP

AECOM

RLWTF-UP LOW LEVEL WASTE SUBPROJECT

PROCESS COOLING WATER SYSTEM RISER DIAGRAM

BLDG. 251 TA-50

DRAWN	V DAVISON
DESIGN	B SHREEVE
CHECKED	C MOYERS
DATE	5/8/14

SUBMITTED: MANNY TARIN

APPROVED FOR RELEASE: ED ARTIGLIA

Los Alamos NATIONAL LABORATORY PO Box 1663 Los Alamos, New Mexico 87545

SHEET M-9203

85 OF 118

CLASSIFICATION | REVIEWER | DATE

PROJECT ID 100761 | DRAWING NO C55865 | REV 0

CHARLES MOYERS NEW MEXICO 18838 LICENSED PROFESSIONAL ENGINEER

05-08-14

File Location: P:\RLWTF LOW-LEVEL WASTE FACILITY\500 CAD\C55865 CUB\SHEETS\15 MECHANICAL\55865-M-9203-R0.DWG
Plotted By: DAVISON, VANESSA Plot Date: Friday, May 02, 2014

12570

(ALL SYMBOLS SHOWN ARE NOT NECESSARILY USED ON THE DRAWINGS)

ELECTRICAL SYMBOL LEGEND

ELECTRICAL SYMBOLS

SYMBOL	DESCRIPTION
	EXISTING CONSTRUCTION
	EXISTING TO BE REMOVED
	FUTURE CONSTRUCTION
	NEW CONSTRUCTION
	ELECTRICAL SIGNAL/UG CONDUIT
	NETWORKING DATA LINK
	HOMERUN CONDUIT
	GROUND
	PHASE
	SWITCHED
	NEUTRAL
	INSTRUMENT GROUND
	FLEXIBLE CONDUIT
	CONDUIT DOWN
	CONDUIT UP
	CONDUIT SEAL
E	CONDUIT CAP
480V 600A	BUSWAY WITH DESCRIPTION
G	GROUNDING CONDUCTOR
	CABLE TRAY
J	CEILING MOUNTED JUNCTION BOX
J HJ	WALL MOUNTED JUNCTION BOX
	DUPLEX RECEPTACLE OUTLET
	SINGLE RECEPTACLE OUTLET
	DOUBLE DUPLEX RECEPTACLE
GFCI WP	GROUND FAULT CIRCUIT INTERRUPTER DUPLEX OUTLET WITH WEATHERPROOF COVER
*	SPECIAL PURPOSE OUTLET – USE SUBSCRIPT TO IDENTIFY TYPE IN SPECS
*	FLOOR RECEPTACLE OUTLET – USE SUBSCRIPT TO IDENTIFY TYPE IN SPECS
	RECEPTACLE RACEWAY
* = a	SINGLE POLE SWITCH – CONTROLS FIXTURES INDICATED
* = 2	DOUBLE POLE SWITCH
* = 3	THREE-WAY SWITCH
* = 4	FOUR-WAY SWITCH
* = WP	WEATHERPROOF SWITCH
* = K	KEY OPERATED SWITCH
* = T	MOTOR RATED SWITCH, WITH THERMAL OVERLOAD PROTECTION
LC	LIGHTING CONTROLLER
600	DIMMER SWITCH – NUMBER INDICATES WATTAGE
M	OCCUPANCY SENSING SWITCH
P	PHOTOCELL
6 30	REMOTE CONTROL SWITCH 6 POLE, 30 AMPS
A 1, a	FLUORESCENT LUMINAIRE A = FIXTURE TYPE 1 = CIRCUIT NUMBER a = SWITCH CONTROLLING FIXTURE
A 1, a	WALL MOUNTED FLUORESCENT LUMINAIRE A = FIXTURE TYPE 1 = CIRCUIT NUMBER a = SWITCH CONTROLLING FIXTURE

SYMBOL	DESCRIPTION
A 1, a	CEILING MOUNTED LUMINAIRE A = FIXTURE TYPE 1 = CIRCUIT NUMBER a = SWITCH CONTROLLING FIXTURE
A 1, a	WALL MOUNTED LUMINAIRE A = FIXTURE TYPE 1 = CIRCUIT NUMBER a = SWITCH CONTROLLING FIXTURE
A 1, a	EMERGENCY LUMINAIRE A = FIXTURE TYPE W/ "EL" 1 = CIRCUIT NUMBER a = SWITCH CONTROLLING FIXTURE
A	LIGHT POLE WITH LUMINAIRE A = FIXTURE TYPE
	EMERGENCY LIGHTING UNIT RECHARGEABLE TYPE A = FIXTURE TYPE
A	CEILING MOUNTED EXIT SIGN – ARROW AS INDICATED A = FIXTURE TYPE 1 = CIRCUIT NUMBER
A	TWO FACED EXIT SIGN A = FIXTURE TYPE 1 = CIRCUIT NUMBER
A	WALL MOUNTED EXIT SIGN A = FIXTURE TYPE 1 = CIRCUIT NUMBER
	SWITCHGEAR, POWER PANELBOARD LIGHTING PANELBOARD
	CLEAR SPACE (WORKING CLEARANCE OR FUTURE)
T	TRANSFORMER
40A 60A F	FUSIBLE DISCONNECT 40A – INDICATES FUSE SIZE 60A – INDICATES SWITCH SIZE
20 J	NON-FUSIBLE DISCONNECT SWITCH – NUMBER INDICATES SWITCH SIZE
2 J 20	COMBINATION MAGNETIC STARTER AND CIRCUIT BREAKER 2 – INDICATES NEMA STARTER SIZE 20 – INDICATES CIRCUIT BREAKER TRIP
2	MAGNETIC STARTER – NUMBER INDICATES NEMA STARTER SIZE
SS 3	SOFT STARTER – NUMBER INDICATES NEMA STARTER SIZE
ASD	ADJUSTABLE SPEED DRIVE
PB	PULL BOX
	T–TELEPHONE RACEWAY F–FIRE ALARM RACEWAY FO–FIBER OPTIC RACEWAY C–CONTROL RACEWAY E–ELECTRICAL RACEWAY
	KEYED NOTE DESIGNATION
	ELECTRICAL EQUIPMENT DESIGNATION
	MECHANICAL EQUIPMENT DESIGNATION
	NAMEPLATE DESIGNATION
	PART BUBBLE
XX	LIGHTNING PROTECTION SYSTEM AIR TERMINAL XX = LENGTH IN INCHES
	CONNECTION POINT (NS)
	EXOTHERMIC BOND OR COMPRESSION FITTING CONNECTIONS (NS)

SYMBOL	DESCRIPTION
LP–xx	PANELBOARD WITH MAIN CIRCUIT BREAKER
100 LP–xx	PANELBOARD WITH MAIN LUGS 100 INDICATES PANEL SIZE
100/3	MEDIUM VOLTAGE DISCONNECT SWITCH
600	MEDIUM VOLTAGE DRAWOUT CIRCUIT BREAKER
1000 1200	DRAWOUT CIRCUIT BREAKER (TRIP/FRAME)
7 MCP	MOTOR CIRCUIT PROTECTOR
300 400	CIRCUIT BREAKER (TRIP/FRAME)
480 Δ 208Y/120 500 KVA	TRANSFORMER – DELTA–WYE CONNECTION
	SURGE PROTECTION (MOV)
3000/5 3	CURRENT TRANSFORMER – NUMBERS INDICATE RATIO AND QUANTITY
3	POTENTIAL TRANSFORMER – NUMBER INDICATES QUANTITY
5A	FUSE
A5	FUSIBLE ELEMENT
A5	FUSIBLE DISCONNECT SWITCH
	GROUND
100 C	CIRCUIT BREAKER BUSWAY PLUG (NUMBER INDICATES C/B TRIP)
N E L	AUTOMATIC TRANSFER SWITCH
R1	RELAY #1
CR	CONTROL RELAY (NS)
12,700	AVAILABLE 3 PHASE FAULT CURRENT (RMS SYM–AMPS)
	BUS PLUG CIRCUIT BREAKER
	PLUG–IN CONNECTOR
	NORMALLY CLOSED CONTACT
	REMOTE NORMALLY CLOSED CONTACT (NS)
	NORMALLY OPEN CONTACT
	REMOTE NORMALLY OPEN CONTACT (NS)
	PROTECTIVE RELAY, SOLENOID COIL
	OVERLOAD RELAY
	CONNECTION
	CONNECTION

SYMBOL	DESCRIPTION
5	MOTOR (NUMBER INDICATES HP)
XX	LOAD (GROUP OR NON MOTOR)
SCR	SILICON CONTROLLED RECTIFIER–BASED CONTROLLER
CAM J2	CONTINUOUS AIR MONITOR J2 IDENTIFICATION NUMBER
FAS J2	FIXED AIR SAMPLER J2 IDENTIFICATION NUMBER

INSTRUMENT/FUNCTION SYMBOLS

	PRIMARY LOCATION NORMALLY ACCESSIBLE TO OPERATOR
DISCRETE INSTRUMENTS	J1 J2
SHARED DISPLAY, SHARED CONTROL	J1 J2

ABBREVIATIONS

(ALL ABBREVIATIONS SHOWN ARE NOT NECESSARILY USED ON THE DRAWINGS)

A	AMPS
AL	ALUMINUM
AFF	ABOVE FINISHED FLOOR
BAS	BUILDING AUTOMATION SYSTEM
C	CONDUIT
CAB	CABINET
CAM	CONTINUOUS AIR MONITOR
CAV	CONSTANT AIR VOLUME VALVE
CU	COPPER
DS	DISCONNECT SWITCH
E	ELECTRICAL
ES	EMERGENCY STOP
EWS	ENGINEERING WORKSTATION
EXST	EXISTING
FAS	FIXED AIR SAMPLER
FCS	FACILITY CONTROL SYSTEM
FO	FIBEROPTIC
FP	FIRE PROTECTION
FSD	FIRE SMOKE DAMPER
GND	GROUND
GFI	GROUND FAULT INTERRUPTER
HVAC	HEATING VENTILATING AND AIR CONDITIONING
HWR	HOT WATER RETURN
HWS	HOT WATER SUPPLY
IJB	INSTRUMENT JUNCTION BOX

ABBREVIATIONS (CONTINUED)

KCMIL	THOUSAND CIRCULAR MIL
KV	KILOVOLTS
KVA	KILOVOLT–AMPS
KW	KILOWATTS
LP	LIGHTING PANEL
MCC	MOTOR CONTROL CENTER
MCS	MOTOR COMBINATION STARTER
MOV	METAL OXIDE VARISTER
MR	MULTI RATIO
MV	MEDIUM VOLTAGE
NS	NOT STANDARD
OWS	OPERATOR WORK STATION
PJB	POWER JUNCTION BOX
PP	POWER PANEL
RLWTF	RADIOACTIVE LIQUID WASTE TREATMENT FACILITY
SPD	SURGE PROTECTION DEVICE
SS	SOFT START
SWBD	SWITCHBOARD
SWGR	SWITCHGEAR
T	TELECOMMUNICATION
THK	THICK
TR	DRY TYPE TRANSFORMER
UG	UNDERGROUND
UL	UNDERWRITERS LABORATORIES
V	VOLTS
WP	WEATHERPROOF
XFMR	TRANSFORMER

NO	DATE	CLASS REV	ADC	DESCRIPTION	DWN	DES	CHKD	SUB	APP

AECOM

RLWTF–UP LOW LEVEL WASTE SUBPROJECT

SYMBOL LEGEND AND ABBREVIATIONS

BLDG. 251 TA–50

SUBMITTED MANNY TARIN

APPROVED FOR RELEASE ED ARTIOLA

DRAWN	V DAVISON
DESIGN	S MOORE
CHECKED	D MOE
DATE	5/8/14

Los Alamos NATIONAL LABORATORY PO Box 1663 Los Alamos, New Mexico 87545

CLASSIFICATION REVIEWER DATE

PROJECT ID 100761 DRAWING NO C55865 REV 0

SHEET E–0201

86 OF 118

LICENSED DAVID MOE NEW MEXICO 21367 PROFESSIONAL ENGINEER

Plot Date: Friday, May 02, 2014
Plotted By: DAVISON, VANESSA
File Location: P:\RLWTF LOW-LEVEL WASTE FACILITY\100 CAD\CSABS CUBS\SHEET\E18 ELECTRICAL\100855-E-0201.MS DWG

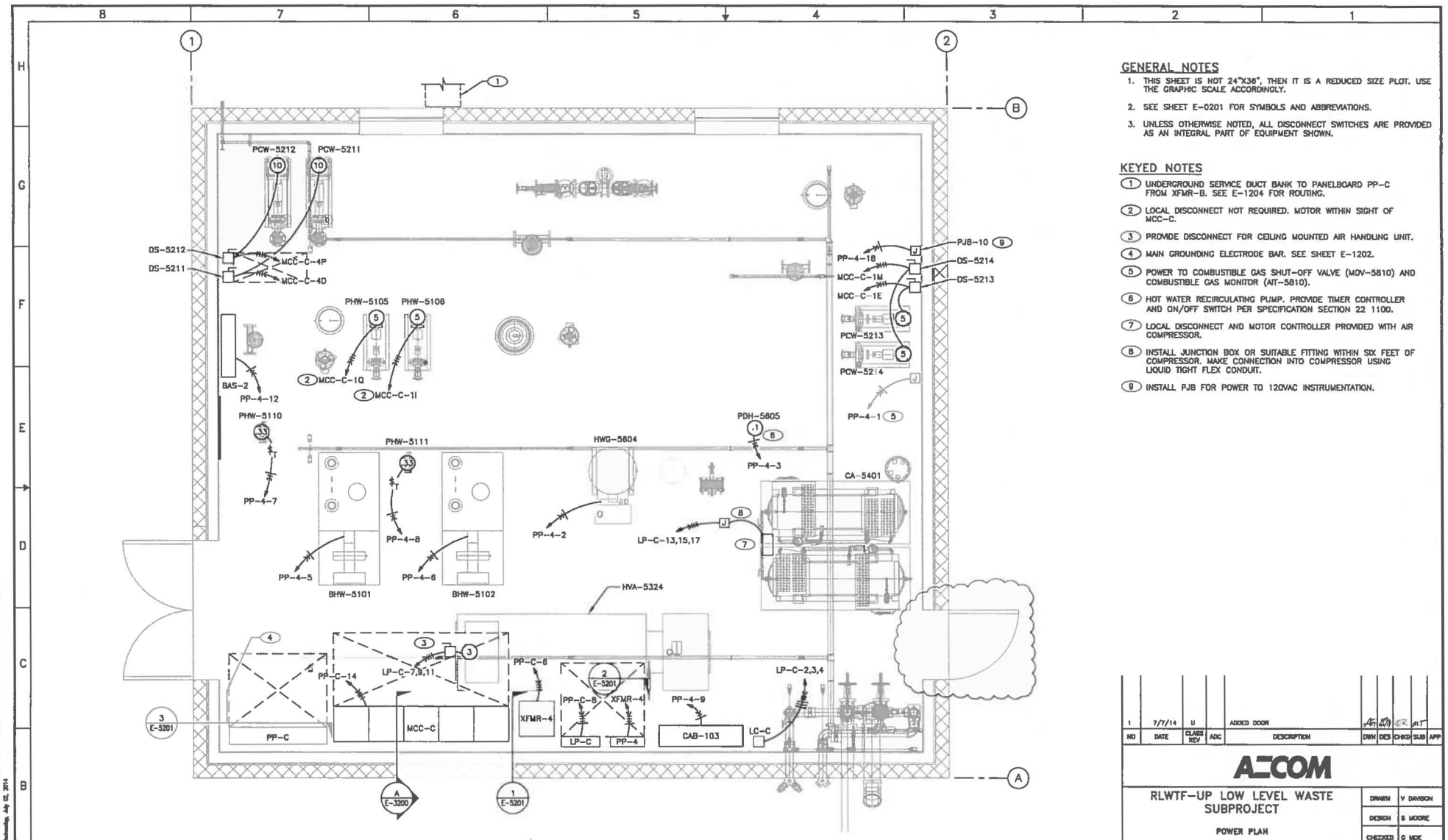

POWER PLAN

1/2"=1'-0"

GENERAL NOTES

1. THIS SHEET IS NOT 24"X36", THEN IT IS A REDUCED SIZE PLOT. USE THE GRAPHIC SCALE ACCORDINGLY.
2. SEE SHEET E-0201 FOR SYMBOLS AND ABBREVIATIONS.
3. UNLESS OTHERWISE NOTED, ALL DISCONNECT SWITCHES ARE PROVIDED AS AN INTEGRAL PART OF EQUIPMENT SHOWN.

KEYED NOTES

(1) UNDERGROUND SERVICE DUCT BANK TO PANELBOARD PP-C FROM XFMR-B. SEE E-1204 FOR ROUTING.

(2) LOCAL DISCONNECT NOT REQUIRED. MOTOR WITHIN SIGHT OF MCC-C.

(3) PROVIDE DISCONNECT FOR CEILING MOUNTED AIR HANDLING UNIT.

(4) MAIN GROUNDING ELECTRODE BAR. SEE SHEET E-1202.

(5) POWER TO COMBUSTIBLE GAS SHUT-OFF VALVE (MOV-5810) AND COMBUSTIBLE GAS MONITOR (AIT-5810).

(6) HOT WATER RECIRCULATING PUMP. PROVIDE TIMER CONTROLLER AND ON/OFF SWITCH PER SPECIFICATION SECTION 22 1100.

(7) LOCAL DISCONNECT AND MOTOR CONTROLLER PROVIDED WITH AIR COMPRESSOR.

(8) INSTALL JUNCTION BOX OR SUITABLE FITTING WITHIN SIX FEET OF COMPRESSOR. MAKE CONNECTION INTO COMPRESSOR USING LIQUID TIGHT FLEX CONDUIT.

(9) INSTALL PJB FOR POWER TO 120VAC INSTRUMENTATION.

NO	DATE	CLASS REV	ADC	DESCRIPTION	DRN	DES	CHKD	SUB	APP
1	7/7/14	U		ADDED DOOR					

AECOM

RLWTF-UP LOW LEVEL WASTE SUBPROJECT

POWER PLAN

BLDG. 251 TA-50

DRAWN	V DAVISON
DESIGN	S MOORE
CHECKED	G MOE
DATE	5/8/14

SUBMITTED MANNY TARIN

APPROVED FOR RELEASE ED ARTIOLA

Los Alamos NATIONAL LABORATORY PO Box 1663 Los Alamos, New Mexico 87545

SHEET E-1200

87 OF 118

CLASSIFICATION REVIEWER DATE

PROJECT ID 100761

DRAWING NO C55865

REV 1

EUGENE DAVID RAE NEW MEXICO 21389 PROFESSIONAL ENGINEER 7-7-14

21572 :

File Location: W:\PLANT\ LOW-LEVEL WASTE FACILITY\300 CAD\C55865 CUP\SHEETS\16 ELECTRICAL\C55865-E-1200-R1.DWG
Plotted By: BRENNAN, DARLENE, Plot Date: Wednesday, July 02, 2014

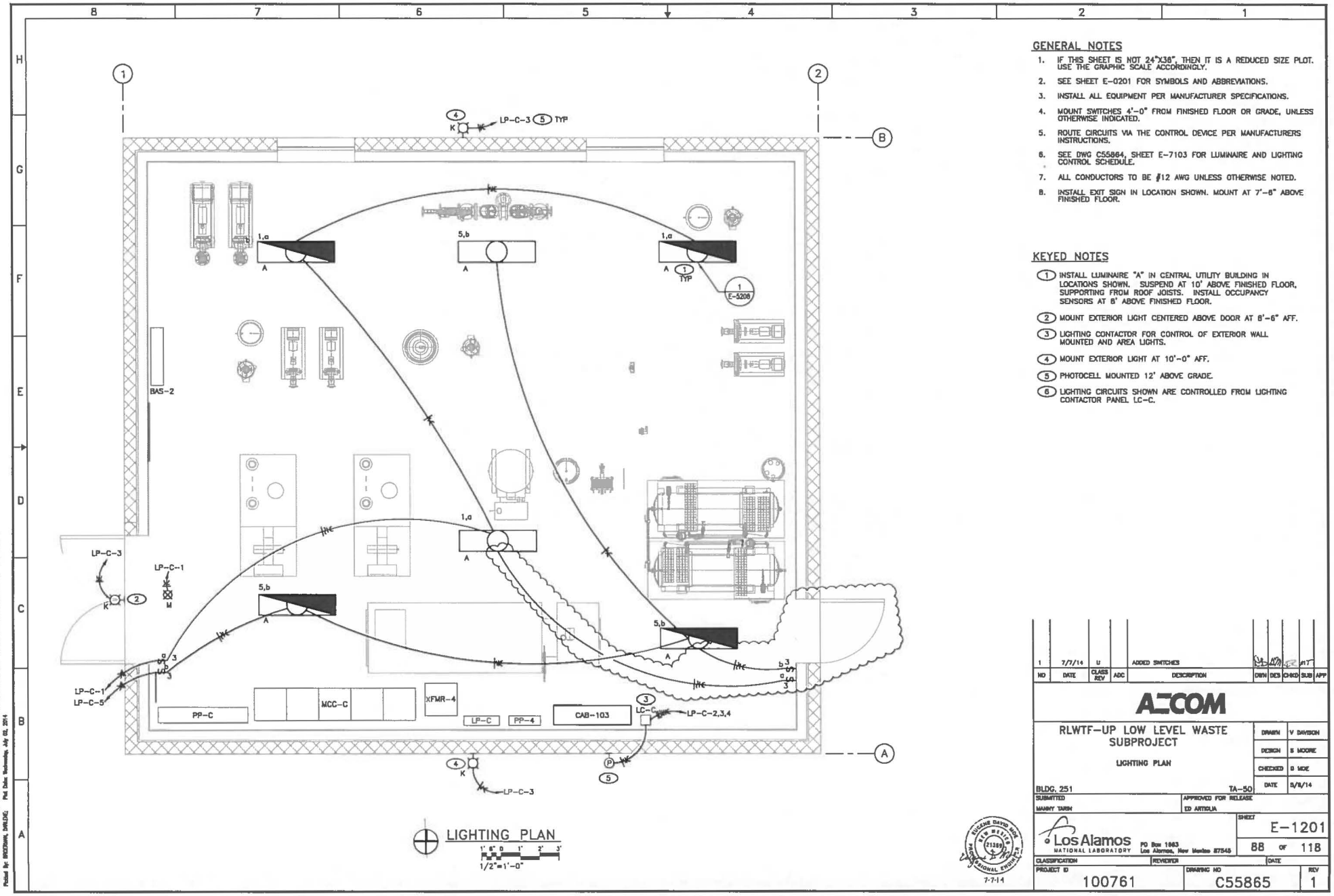

LIGHTING PLAN

1" 6" 0 1' 2' 3'

1/2"=1'-0"

GENERAL NOTES

1. IF THIS SHEET IS NOT 24"X36", THEN IT IS A REDUCED SIZE PLOT. USE THE GRAPHIC SCALE ACCORDINGLY.
2. SEE SHEET E-0201 FOR SYMBOLS AND ABBREVIATIONS.
3. INSTALL ALL EQUIPMENT PER MANUFACTURER SPECIFICATIONS.
4. MOUNT SWITCHES 4'-0" FROM FINISHED FLOOR OR GRADE, UNLESS OTHERWISE INDICATED.
5. ROUTE CIRCUITS VIA THE CONTROL DEVICE PER MANUFACTURERS INSTRUCTIONS.
6. SEE DWG C55864, SHEET E-7103 FOR LUMINAIRE AND LIGHTING CONTROL SCHEDULE.
7. ALL CONDUCTORS TO BE #12 AWG UNLESS OTHERWISE NOTED.
8. INSTALL EXIT SIGN IN LOCATION SHOWN. MOUNT AT 7'-6" ABOVE FINISHED FLOOR.

KEYED NOTES

(1) INSTALL LUMINAIRE "A" IN CENTRAL UTILITY BUILDING IN LOCATIONS SHOWN. SUSPEND AT 10' ABOVE FINISHED FLOOR, SUPPORTING FROM ROOF JOISTS. INSTALL OCCUPANCY SENSORS AT 8' ABOVE FINISHED FLOOR.

(2) MOUNT EXTERIOR LIGHT CENTERED ABOVE DOOR AT 8'-6" AFF.

(3) LIGHTING CONTACTOR FOR CONTROL OF EXTERIOR WALL MOUNTED AND AREA LIGHTS.

(4) MOUNT EXTERIOR LIGHT AT 10'-0" AFF.

(5) PHOTOCELL MOUNTED 12' ABOVE GRADE.

(6) LIGHTING CIRCUITS SHOWN ARE CONTROLLED FROM LIGHTING CONTACTOR PANEL LC-C.

NO	DATE	CLASS REV	ADC	DESCRIPTION	DRWN	DES	CHKD	SUB	APP
1	7/7/14	U		ADDED SWITCHES					

AECOM

RLWTF-UP LOW LEVEL WASTE SUBPROJECT

LIGHTING PLAN

BLDG. 251 TA-50

DRAWN	V DAVISON
DESIGN	S MOORE
CHECKED	B MOE
DATE	5/8/14

SUBMITTED: MANNY TARIN

APPROVED FOR RELEASE: ED ARTIGUA

Los Alamos NATIONAL LABORATORY PO Box 1663 Los Alamos, New Mexico 87545

SHEET E-1201

88 OF 118

CLASSIFICATION | REVIEWER | DATE

PROJECT ID 100761 | DRAWING NO C55865 | REV 1

EUGENE DAVID MOE NEW MEXICO 21389 REGISTERED PROFESSIONAL ENGINEER

7-7-14

File Location: W:\PLANT LOW-LEVEL WASTE FACILITY\300 CAD\CS5865 CAD\SHEETS\14 ELECTRICAL\C55865-E-1201-R1.DWG
Plotted By: BRADSHAW, DARLENE Plot Date: Wednesday, July 02, 2014

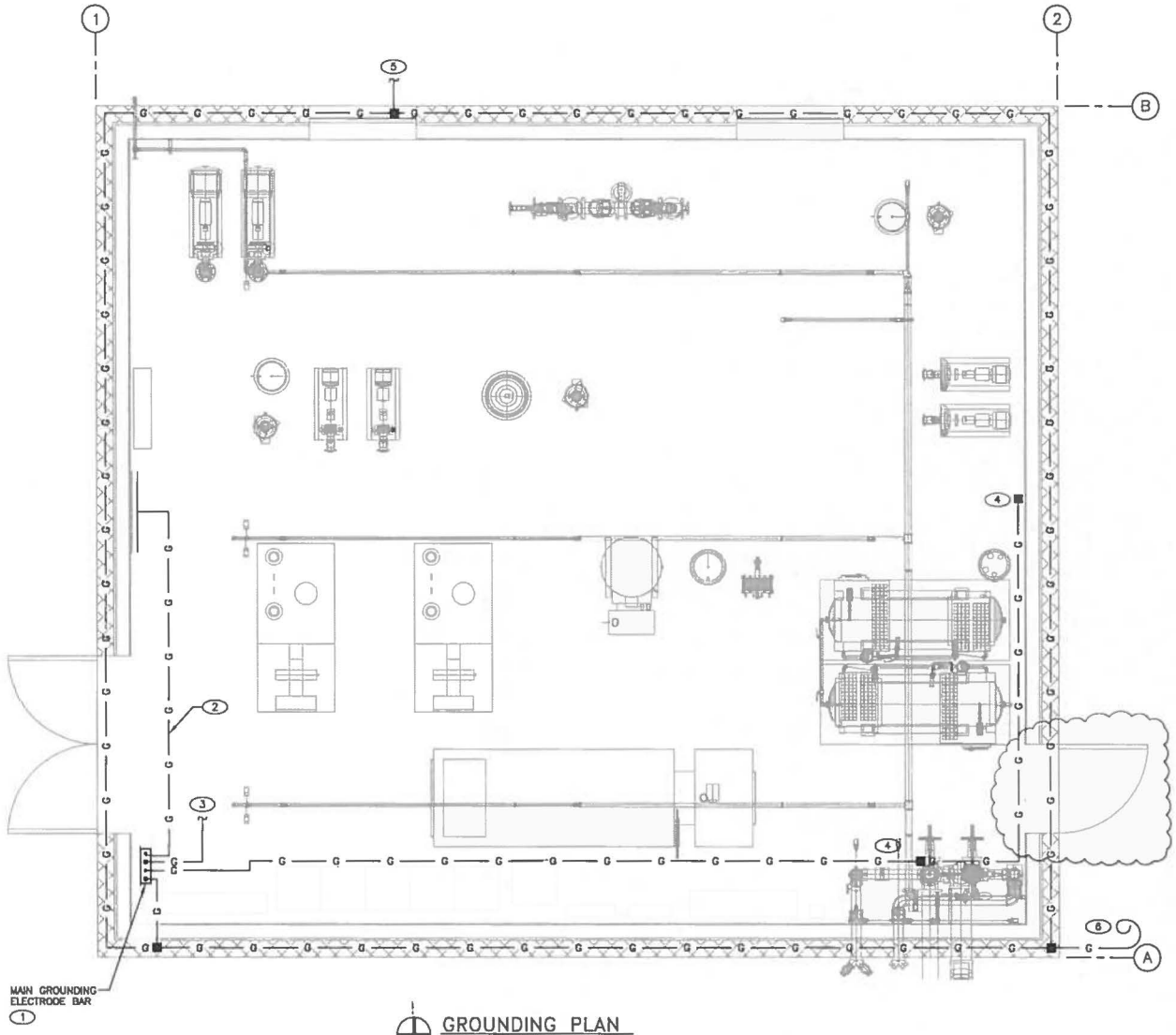

GROUNDING PLAN

1/2"=1'-0"

GENERAL NOTES

1. IF THIS SHEET IS NOT 24"X36", THEN IT IS A REDUCED SIZE PLOT. USE THE GRAPHIC SCALE ACCORDINGLY.
2. ALL GROUNDING ELECTRODE CONDUCTORS ARE #4/0 AWG UNLESS OTHERWISE SPECIFIED.
3. SEE SHEET E-6201 GROUNDING SYSTEM DIAGRAM FOR OTHER CONDUCTOR SIZES.
4. SEE SHEET E-0201 FOR SYMBOLS AND ABBREVIATIONS.

KEYED NOTES

1. INSTALL CONCRETE ENCASED ELECTRODE PER REQUIREMENT ON SHEET E-6201. PROVIDE 5 FEET OF BARE COPPER A.F.F. FOR BONDING MAIN GROUNDING ELECTRODE BAR TO GROUNDING ELECTRODE SYSTEM.
2. BOND THE TELECOMMUNICATIONS MAIN GROUNDING BUSBAR TO THE BUILDING ELECTRICAL SYSTEM MAIN ELECTRODE GROUNDING BAR USING INSULATED THW #4/0 AWG CONDUCTOR INSTALLED IN 1" PVC CONDUIT.
3. BOND METALLIC PIPING SYSTEMS TO MAIN GROUNDING ELECTRODE GROUND BAR. (REF E-6201).
4. BOND FIRE RISER AND NATURAL GAS PIPING TO THE MAIN GROUNDING ELECTRODE GROUND BAR.
5. BOND SERVICE DUCT BANK GROUND CONDUCTOR TO BUILDING GROUNDING ELECTRODE SYSTEM.
6. PROVIDE 10'-0" (MIN) GROUNDING CONDUCTOR BONDED TO BUILDING GROUNDING ELECTRODE SYSTEM FOR BONDING PIPE RACK.

NO	DATE	CLASS REV	ADC	DESCRIPTION	DWN	DES	CHKD	SUB	APP
1	7/7/14	U		ADDED DOOR					

AECOM

RLWTF-UP LOW LEVEL WASTE SUBPROJECT

GROUNDING PLAN

BLDG. 251 TA-50

DRAWN	V DAVISON
DESIGN	S MOORE
CHECKED	G MOE
DATE	5/8/14

SUBMITTED: MANNY TARIN

APPROVED FOR RELEASE: ED ARTIGLIA

Los Alamos NATIONAL LABORATORY PO Box 1663 Los Alamos, New Mexico 87545

SHEET E-1202

89 OF 118

CLASSIFICATION | REVIEWER | DATE

PROJECT ID 100761 | DRAWING NO C55865 | REV 1

EUGENE DAVID MOE NEW MEXICO 21368 PROFESSIONAL ENGINEER 7-7-14

File Location: W:\RLWTF LOW-LEVEL WASTE FACILITY\500 CAD\C55865 CUST\SHEETS\18 ELECTRICAL\55865-E-1202-R1.DWG
Plotted By: BOEDMAN, DAVLENE; Plot Date: Wednesday, July 02, 2014

: 12574

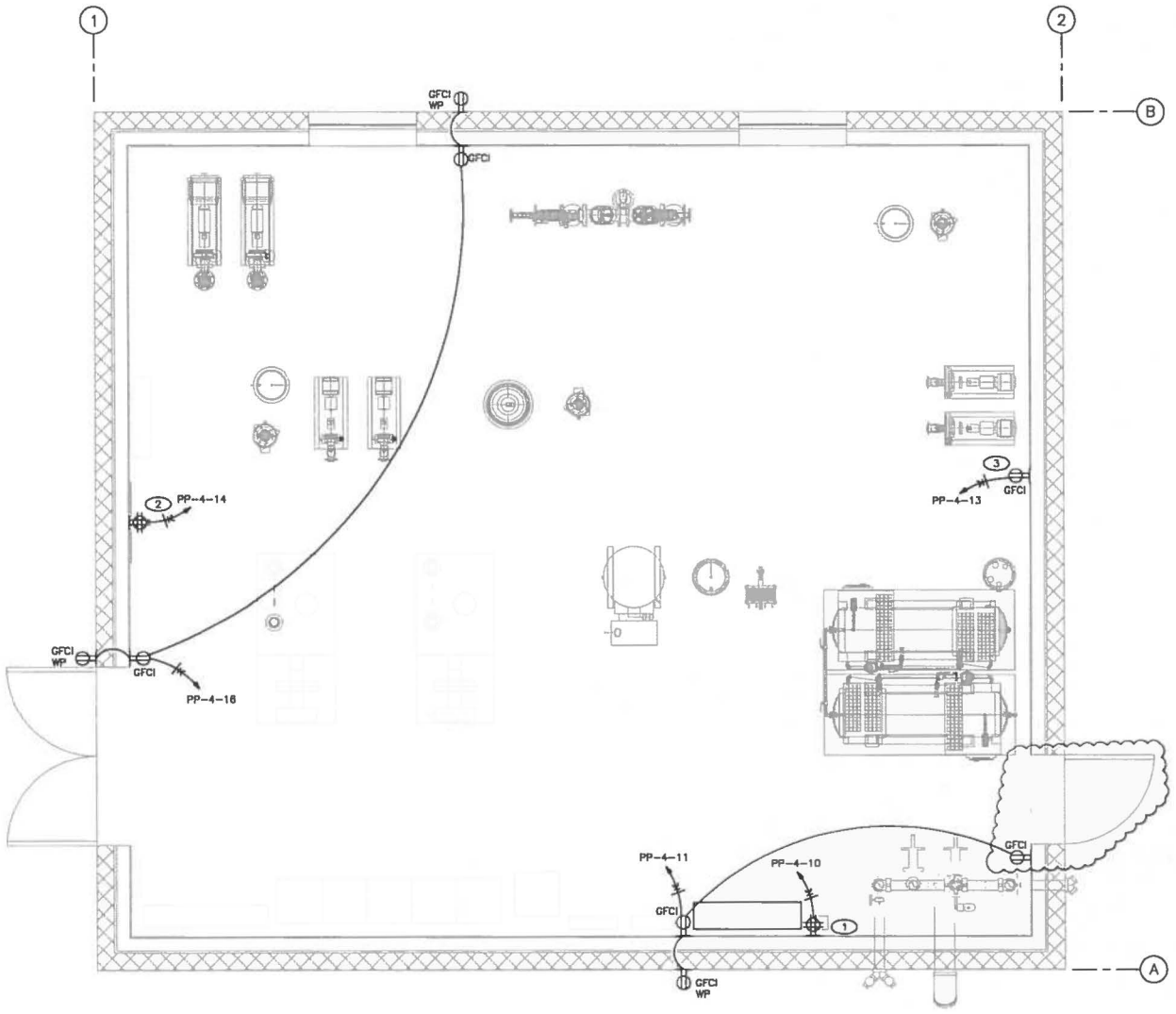

RECEPTACLE PLAN

1/2"=1'-0"

GENERAL NOTES

1. IF THIS SHEET IS NOT 24"X36", THEN IT IS A REDUCED SIZE PLOT. USE THE GRAPHIC SCALE ACCORDINGLY.
2. SEE DRAWING C55864 SHEET E-0201 FOR SYMBOLS AND ABBREVIATIONS.

KEYED NOTES

(1) DEDICATED RECEPTACLE FOR COMPUTER WORKSTATION. INSTALL 42" AFF.

(2) INSTALL RECEPTACLE ABOVE TELECOMMUNICATIONS BACKBOARD.

(3) INSTALL DEDICATED RECEPTACLE FOR SUMP PUMP.

NO	DATE	CLASS REV	ADC	DESCRIPTION	DWN	DES	CHKD	SUB	APP
1	7/7/14	U		REVISED RECEPTACLE					

AECOM

RLWTF-UP LOW LEVEL WASTE SUBPROJECT

RECEPTACLE PLAN

DRAWN	V DAVISON
DESIGN	S MOORE
CHECKED	D MOE
DATE	5/8/14

BLDG. 251 TA-50

SUBMITTED: MANNY TARIN

APPROVED FOR RELEASE: ED ARTIOLA

Los Alamos NATIONAL LABORATORY PO Box 1663 Los Alamos, New Mexico 87545

SHEET E-1203

90 OF 118

CLASSIFICATION | REVIEWER | DATE

PROJECT ID 100761

DRAWING NO C55865

REV 1

EUGENE DAVID MOE 21369 REGISTERED PROFESSIONAL ENGINEER 7-7-14

51521 :

File Location: N:\PLWTF LOW-LEVEL WASTE FACILITY\360 CAD\C55865 CAD\SHEETS\10 ELECTRICAL\55865-E-1203-R1.DWG

Plotted By: BRIDGMAN, DARLENE Plot Date: Wednesday, July 02, 2014

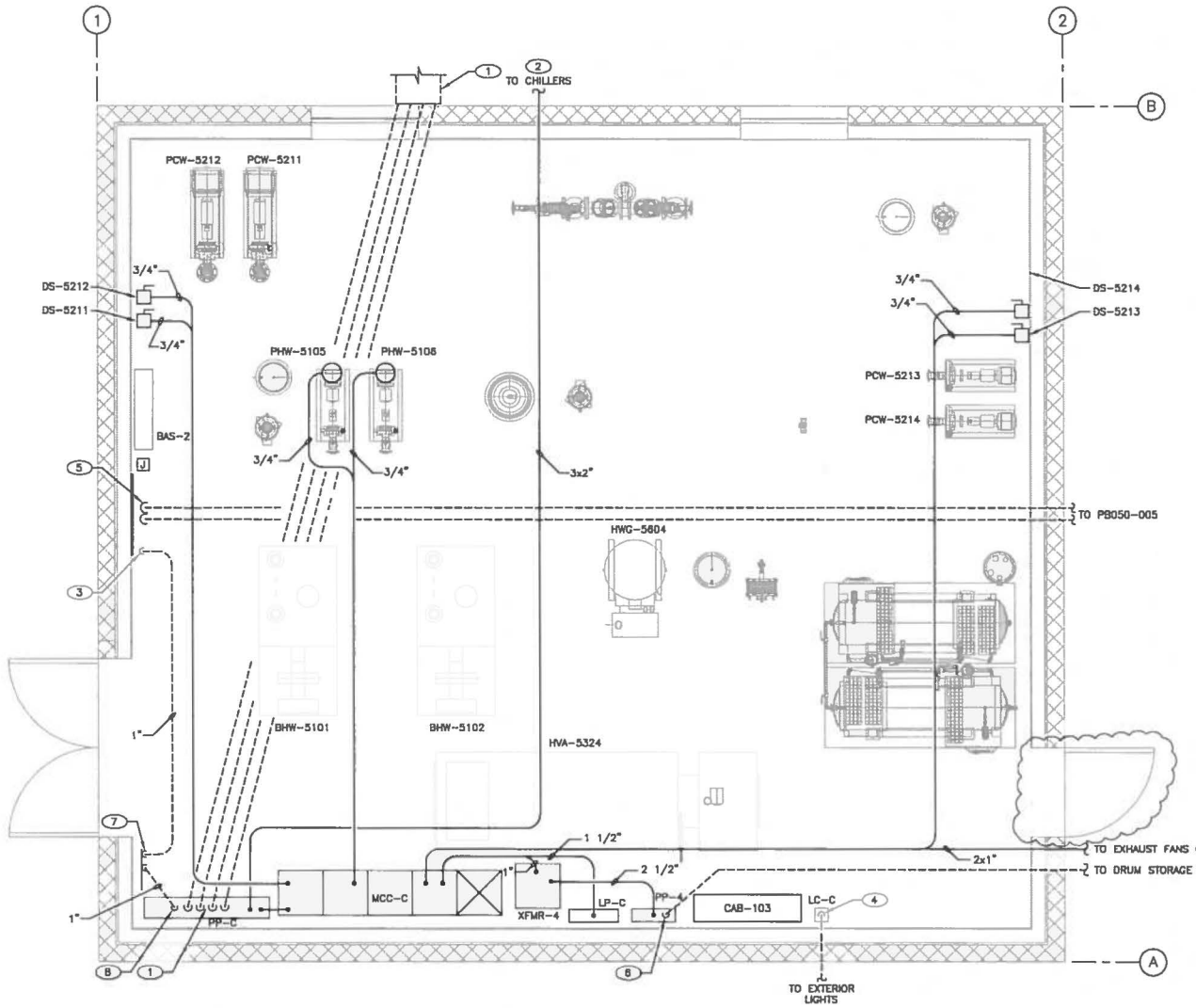

CONDUIT PLAN

1/2"=1'-0"

GENERAL NOTES

1. IF THIS SHEET IS NOT 24"X36", THEN IT IS A REDUCED SIZE PLOT. USE THE GRAPHIC SCALE ACCORDINGLY.
2. SEE SHEET E-0201 FOR SYMBOLS AND ABBREVIATIONS.
3. DRAWING ONLY SHOWS CONDUIT THAT PENETRATES THE BUILDING WALLS OR FLOOR, OR SUPPLIES LARGE EQUIPMENT. FOR ALL CONDUIT REQUIRED SEE SHEET E-7203.
4. CONDUIT STUB-UP CONNECTIONS SHALL BE RIGID STEEL OR INTERMEDIATE METALLIC CONDUIT UNLESS STUB-UP OCCURS WITHIN AN ENCLOSURE OR IS USED FOR GROUND CONDUCTORS ONLY.
5. CONDUIT FLOOR PENETRATION DIMENSIONS ARE APPROXIMATIONS. CONDUIT RISER LOCATIONS SHALL BE ADJUSTED AS NEEDED TO COORDINATE WITH FINAL EQUIPMENT LOCATIONS.

KEYED NOTES

1. (4) 3 1/2" CONDUIT UNDERGROUND THROUGH FLOOR SLAB TO DUCT BANK TO XFMR-B. CONDUITS TO BE CENTERED 4'-0" EAST OF COLUMN GRID 1 AND 2'-0" NORTH OF COLUMN GRID A. SEE DRAWING C55864 SHEET E-1000.
2. ROUTE CONDUIT ON PIPE RACK.
3. 1" CONDUIT THROUGH FLOOR SLAB FOR COMMUNICATIONS GROUND BAR. CONNECTION TO MAIN GROUNDING ELECTRODE GROUND BAR. CONDUIT IS 1'-9" EAST OF COLUMN GRID LINE 1 AND 16'-6" NORTH OF COLUMN GRID LINE A.
4. 1" CONDUIT THROUGH FLOOR SLAB FOR EXTERIOR LIGHTING. SEE DRAWING C55864 SHEET E-1002. CONDUIT IS 9'-0" WEST OF COLUMN GRID LINE 2 AND 1'-9" NORTH OF COLUMN GRID LINE A.
5. 4" CONDUITS THROUGH FLOOR SLAB FOR ENTRANCE COMMUNICATION CABLES. SEE DRAWING C55864 SHEET E-1000. CONDUITS TO BE CENTERED IS 1'-9" EAST OF COLUMN GRID LINE 1 AND 16'-6" NORTH OF COLUMN GRID LINE A.
6. 1" CONDUIT THROUGH FLOOR SLAB FOR DRUM STORAGE BRANCH CIRCUIT. SEE DRAWING C55864 SHEET E-1000. CONDUIT IS X'-X" WEST OF COLUMN GRID LINE 2 AND Y'-Y" NORTH OF COLUMN GRID LINE A.
7. (2) 1" CONDUIT THROUGH FLOOR SLAB FOR MAIN GROUNDING ELECTRODE GROUND FOR CONNECTIONS. CONDUITS TO BE CENTERED 1'-9" EAST OF COLUMN GRID LINE 1 AND 3'-6" NORTH OF COLUMN GRID LINE A.
8. 1" CONDUIT THROUGH FLOOR SLAB FOR SWITCHBOARD CONNECTION TO MAIN GROUNDING ELECTRODE GROUND BAR. CONDUIT IS 2'-10" EAST OF COLUMN GRID LINE 1 AND 2'-0" NORTH OF COLUMN GRID LINE A.

NO	DATE	CLASS REV	ADC	DESCRIPTION	DWN	DES	CHKD	SUB	APP
1	7/7/14	U		ADDED DOOR					

AECOM

RLWTF-UP LOW LEVEL WASTE SUBPROJECT

CONDUIT PLAN

BLDG. 251 TA-50

DRAWN	V DAVISON
DESIGN	S MOORE
CHECKED	G MOE
DATE	5/8/14

SUBMITTED: MANNY TARIN

APPROVED FOR RELEASE: ED ARTIGLIA

Los Alamos NATIONAL LABORATORY PO Box 1663 Los Alamos, New Mexico 87545

SHEET E-1204

91 OF 118

CLASSIFICATION | REVIEWER | DATE

PROJECT ID 100761 | DRAWING NO C55865 | REV 1

EUGENE DAVID MOE NEW MEXICO 21389 PROFESSIONAL ENGINEER

7-7-14

File Location: W:\RLWTF LOW-LEVEL WASTE FACILITY\500 CAD\C55865 CUB\SHEETS\16 ELECTRICAL\55865-E-1204-R1.DWG
Plotted By: BROCKMAN, DARLING; Plot Date: Wednesday, July 02, 2014

12576

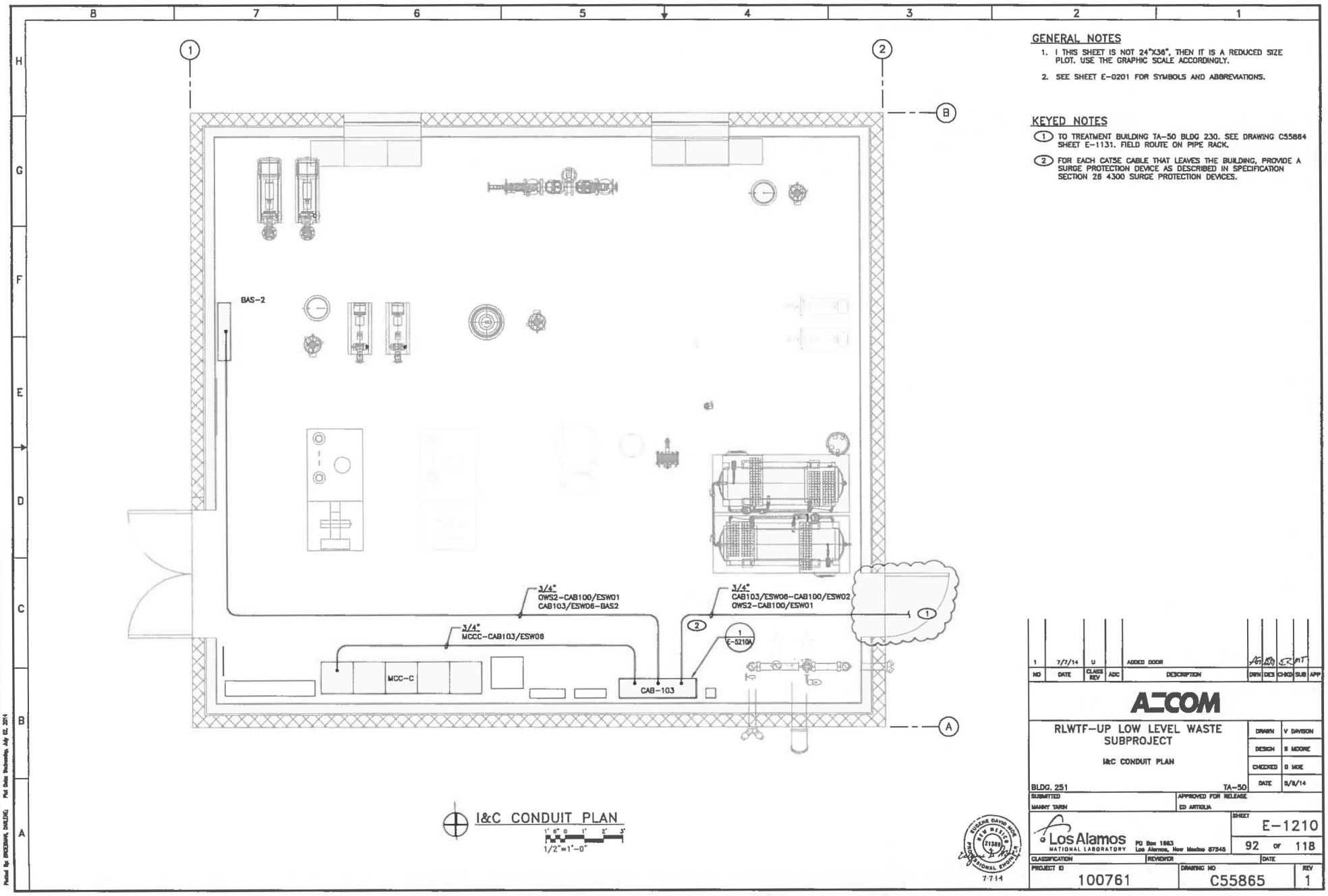

I&C CONDUIT PLAN

1/2"=1'-0"

GENERAL NOTES

1. I THIS SHEET IS NOT 24"X36", THEN IT IS A REDUCED SIZE PLOT. USE THE GRAPHIC SCALE ACCORDINGLY.
2. SEE SHEET E-0201 FOR SYMBOLS AND ABBREVIATIONS.

KEYED NOTES

(1) TO TREATMENT BUILDING TA-50 BLDG 230. SEE DRAWING C55864 SHEET E-1131. FIELD ROUTE ON PIPE RACK.

(2) FOR EACH CAT5E CABLE THAT LEAVES THE BUILDING, PROVIDE A SURGE PROTECTION DEVICE AS DESCRIBED IN SPECIFICATION SECTION 26 4300 SURGE PROTECTION DEVICES.

NO	DATE	CLASS REV	ADC	DESCRIPTION	DRN	DES	CHKD	SUB	APP
1	7/7/14	U		ADDED DOOR					

AECOM

RLWTF-UP LOW LEVEL WASTE SUBPROJECT

I&C CONDUIT PLAN

BLDG. 251 TA-50

DRAWN	V DAVISON
DESIGN	S MOORE
CHECKED	G MOE
DATE	5/8/14

SUBMITTED: MANNY TARIN

APPROVED FOR RELEASE: ED ARTIOLA

Los Alamos NATIONAL LABORATORY PO Box 1663 Los Alamos, New Mexico 87545

SHEET E-1210

92 OF 118

CLASSIFICATION | REVIEWER | DATE

PROJECT ID 100761 | DRAWING NO C55865 | REV 1

7-7-14

File Location: W:\RLWTF LOW-LEVEL WASTE FACILITY\300 CAD\C55865 CUR\SHEETS\10 ELECTRICAL\55865-E-1210-R1.DWG
Plotted By: BROSNAN, DARLENE Plot Date: Wednesday, July 02, 2014

125171

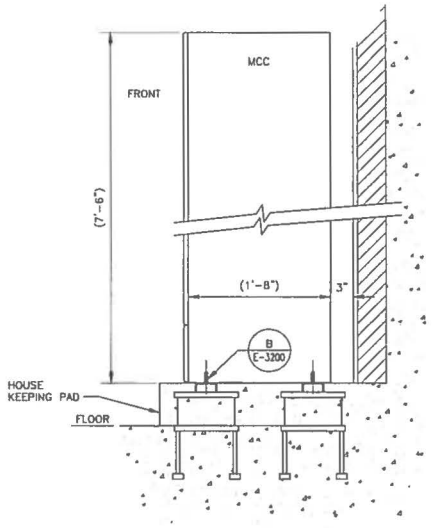

A E-1200 MCC-C FLOOR MOUNTING SECTION

1 1/2"=1'-0"

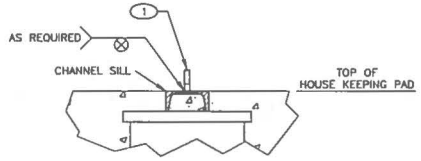

B E-5201 B E-3200 SILL CHANNEL EMBEDMENT SECTION

3"=1'-0"

GENERAL NOTES

1. IF THIS SHEET IS NOT 24"X36", THEN IT IS A REDUCED SIZE PLOT. USE THE GRAPHIC SCALE ACCORDINGLY.

KEYED NOTES

1. ATTACH MOTOR CONTROL CENTER TO EMBED PLATES USING WELD STUDS OF MANUFACTURER RECOMMENDED SIZE IN MANUFACTURER RECOMMENDED LOCATIONS. REFER TO FACTORY SUPPLIED DRAWINGS TO DETERMINE APPROPRIATE ANCHOR LOCATIONS.

NO	DATE	CLASS REV	ADC	DESCRIPTION	DWN	DES	CHKD	SUB	APP

AECOM

RLWTF-UP LOW LEVEL WASTE SUBPROJECT

ELECTRICAL SECTIONS

BLDG. 251 TA-50

DRAWN	V DAVISON
DESIGN	S MOORE
CHECKED	G MOE
DATE	5/6/14

SUBMITTED MANNY TARIN

APPROVED FOR RELEASE ED ARTIGLIA

Los Alamos NATIONAL LABORATORY PO Box 1663 Los Alamos, New Mexico 87545

SHEET E-3200

93 OF 118

CLASSIFICATION REVIEWER DATE

PROJECT ID 100761 DRAWING NO C55865 REV 0

ELOGNE DAVID MOE NEW MEXICO 21989 PROFESSIONAL ENGINEER

File Location: P:\RLWTF LOW-LEVEL WASTE FACILITY\500 CAD\C55865 CUB\SHEETS\18 ELECTRICAL\55865-E-3200-RO.DWG
Plotted By: DAVISON, VANESSA; Plot Date: Friday, May 02, 2014

12578

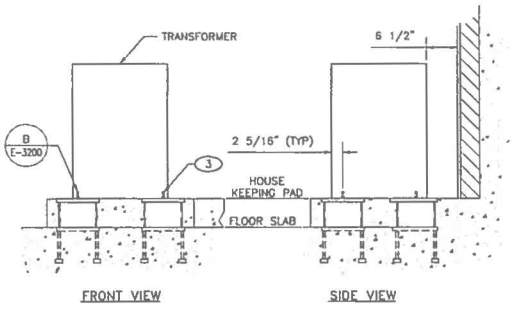

1 E-1200 TRANSFORMER INSTALLATION
SCALE: NONE

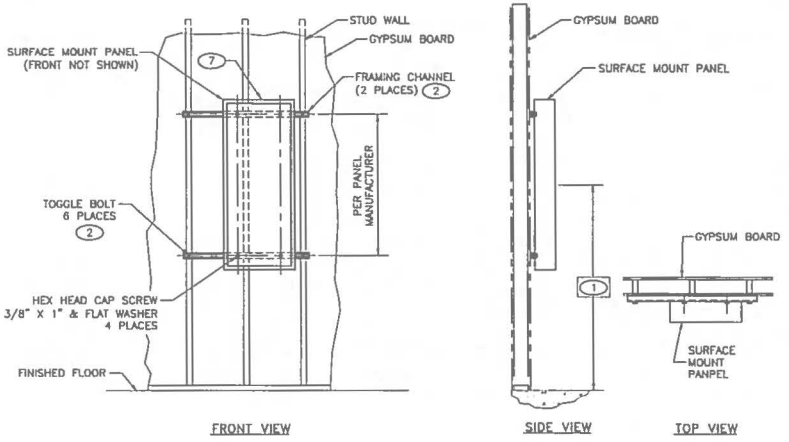

2 E-1200 STUD WALL PANEL INSTALLATION
SCALE: NONE

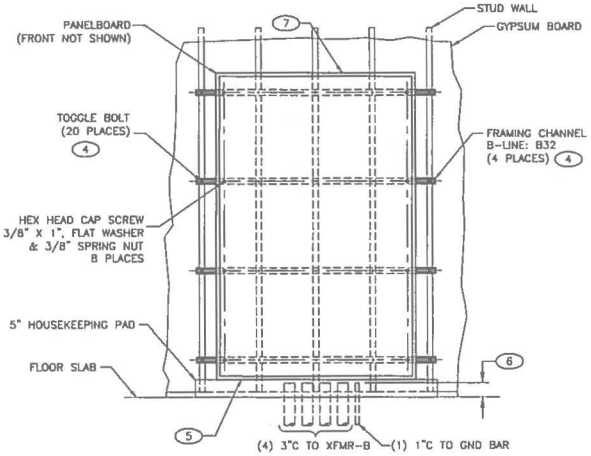

3 E-1200 SERVICE PANEL INSTALLATION
SCALE: NONE

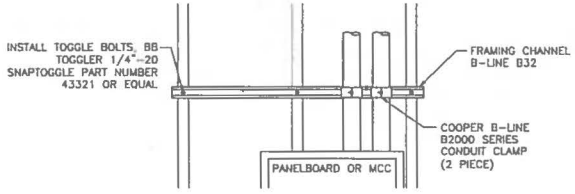

4 E-5201 VERTICAL CONDUIT SUPPORT FROM SHEET ROCK WALL
SCALE: NONE

GENERAL NOTES

1. IF THIS SHEET IS NOT 24"X36", THEN IT IS A REDUCED SIZE PLOT. USE THE GRAPHIC SCALE ACCORDINGLY.

KEYED NOTES

1. INSTALL PANEL HEIGHT SO THAT CENTER IS 4'-0" AFF.
2. INSTALL QTY THREE (3) TOGGLE BOLTS ON THREE (3) METAL STUDS FOR EACH STRUT. USE BB TOGGLER 1/4"-20 SNAPTOGGLE PART NUMBER 43321 OR EQUAL.
3. ATTACH TRANSFORMER TO EMBED PLATES USING WELD STUDS OF MANUFACTURER RECOMMENDED SIZE IN MANUFACTURER RECOMMENDED LOCATIONS.
4. INSTALL QTY FIVE (5) TOGGLE BOLTS ON FIVE (5) METAL STUDS FOR EACH STRUT. USE BB TOGGLER 1/4"-20 SNAPTOGGLE PART NUMBER 43321 OR EQUAL.
5. MOUNT PANELBOARD WITH BOTTOM FLUSH WITH TOP OF HOUSEKEEPING PAD. COORDINATE LOCATION OF SERVICE CONDUITS AND BLOCKOUT WITH OPENING IN BOTTOM OF PANELBOARD.
6. INSTALL CONDUITS 4" ABOVE FINISHED FLOOR.
7. SEE DETAIL 4 THIS SHEET FOR CONDUIT SUPPORT REQUIREMENTS.

NO	DATE	CLASS REV	ADC	DESCRIPTION	DWN	DES	CHKD	SUB	APP

AECOM

RLWTF-UP LOW LEVEL WASTE SUBPROJECT

INSTALLATION DETAILS

BLDG. 251 TA-50

DRAWN	V DAVISON
DESIGN	S MOORE
CHECKED	G MOE
DATE	5/8/14

SUBMITTED: MANNY TARIN
APPROVED FOR RELEASE: ED ARTIGLIA

Los Alamos NATIONAL LABORATORY
PO Box 1663 Los Alamos, New Mexico 87545

SHEET E-5201
94 OF 118

CLASSIFICATION | REVIEWER | DATE

PROJECT ID 100761 | DRAWING NO C55865 | REV 0

File Location: P:\RLWTF LOW-LEVEL WASTE FACILITY\500 CAD\C55865 CUB\SHEETS\16 ELECTRICAL\55865-E-5201-R0.DWG
Plotted By: DAVISON, VANESSA; Plot Date: Friday, May 02, 2014

12579

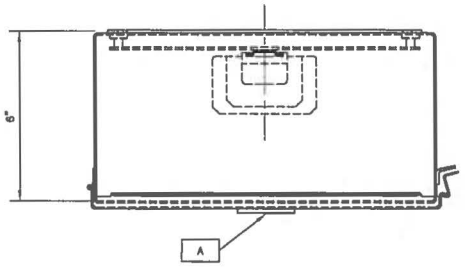

TOP VIEW

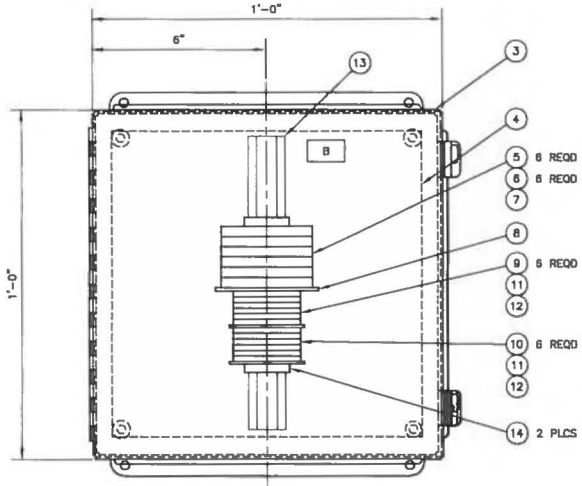

FRONT VIEW

1 PJB-11

1 C55864-E-1004 PJB-11 DETAIL

SCALE: NONE

PARTS LIST/MATERIAL LIST

QTY REQD	PART / DWG NUMBER	NOMENCLATURE/DESCRIPTION	MATERIAL/REFERENCE	SHEET	ITEM NO.
X	-010	PJB-11 POWER JUNCTION BOX			1
					2
1	A1212CHNF OR APPROVED EQUAL	ENCLOSURE, 12"x12"x6" NEMA TYPE 4, SINGLE DOOR	HOFFMAN		3
1	A12P12 OR APPROVED EQUAL	BACK PANEL, 10.75" X 10.88"	HOFFMAN		4
6	1492-H6 OR APPROVED EQUAL	FUSE BLOCK, 300V, 12A MAX	ALLEN-BRADLEY		5
6		FUSE, .25" X 1.25", 2A	---		6
1	1492-SJFB8-10 OR APPROVED EQUAL	SIDE JUMPER, INSULATED, 10 POLE	ALLEN-BRADLEY		7
1	1492-N37 OR APPROVED EQUAL	END BARRIER	ALLEN-BRADLEY		8
6	1492-J3 OR APPROVED EQUAL	TERMINAL, 600V, GREY, SINGLE CIRCUIT FEED THROUGH			9
6	1492-J3-G OR APPROVED EQUAL	TERMINAL, 600V, GREEN, SINGLE CIRCUIT FEED THROUGH	ALLEN-BRADLEY		10
2	1492-SJ5B-10 OR APPROVED EQUAL	SIDE JUMPER, INSULATED, 10 POLE	ALLEN-BRADLEY		11
2	1492-EBJ3 OR APPROVED EQUAL	END BARRIER	ALLEN-BRADLEY		12
AR	199-DR1 OR APPROVED EQUAL	RAIL, MOUNTING, STEEL	ALLEN-BRADLEY		13
2	1492-ERL35 OR APPROVED EQUAL	END ANCHOR	ALLEN-BRADLEY		14

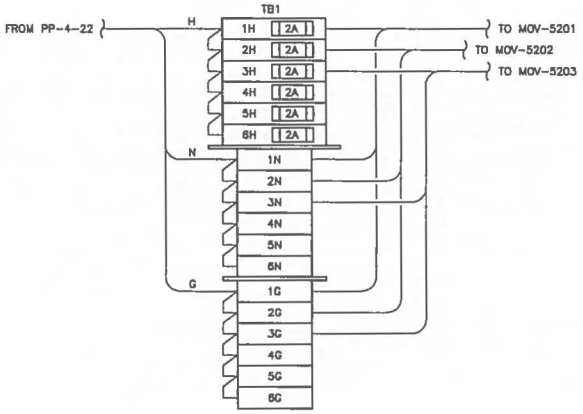

PJB-11 WIRING DIAGRAM

SCALE: NONE

GENERAL NOTES

1. EQUIPMENT SHALL BE INSTALLED PER MANUFACTURER'S INSTRUCTIONS USING THE APPROPRIATE HARDWARE.
2. NAMEPLATE SHALL BE 1/16" THK MATTE FINISH LAMINATED PLASTIC WHITE SURFACE/BLACK CORE. BOND IN PLACE WHERE POSSIBLE.
3. ALL WIRES AND CABLE SHALL BE LABELED AT BOTH TERMINATIONS.

NAMEPLATE ENGRAVING SCHEDULE

ITEM	SIZE	CHAR SIZE	ENGRAVING
A	3" W x 1 H"	3/16"	PJB-11
B	1" W x 0.5 H"	1/4"	TB1

NO	DATE	CLASS REV	ADC	DESCRIPTION	DRN	DES	CHKD	SUB	APP

AECOM

RLWTF-UP LOW LEVEL WASTE SUBPROJECT

PJB-11 PANEL LAYOUT

DRAWN V DAVISON

DESIGN S MOORE

CHECKED G MOE

DATE 5/15/14

BLDG. 251 TA-50

SUBMITTED MANNY TARIN

APPROVED FOR RELEASE ED ARTIGLIA

Los Alamos NATIONAL LABORATORY PO Box 1663 Los Alamos, New Mexico 87545

SHEET E-5202

95 OF 118

CLASSIFICATION REVIEWER DATE

PROJECT ID 100761

DRAWING NO C55865

REV 0

New Mexico 21369 Professional Engineer

09851 1259
File Location: P:_TECHPUBLISH\60239831 - RLWTF\ADD STUDIES, DESIGN\ADD DESIGN SUBMISSIONS\481 CONCEPT DESIGN\DEL 12_5-6-14 FINAL\DEL 12 DRAWINGS\231-LLW UTILITY BUILDING\CAD FILES\231-ELECTRICAL\55865-E-5202-R0.DWG
Plotted By: BRIZUELA, VALERIE Plot Date: Thursday, May 15, 2014

PARTS LIST/MATERIAL LIST

QTY REQD	PARTS / DASH NUMBER	NOMENCLATURE/DESCRIPTION	MATERIAL/REFERENCE	SHEET	ITEM NO.
X	-010	PJB-12 POWER JUNCTION BOX			1
					2
1	A1212CHNF OR APPROVED EQUAL	ENCLOSURE, 12"x12"x6" NEMA TYPE 4, SINGLE DOOR	HOFFMAN		3
1	A12P12 OR APPROVED EQUAL	BACK PANEL, 10.75" X 10.88"	HOFFMAN		4
6	1492-H6 OR APPROVED EQUAL	FUSE BLOCK, 300V, 12A MAX	ALLEN-BRADLEY		5
6		FUSE, .25" X 1.25", 2A	--		6
1	1492-SJFB8-10 OR APPROVED EQUAL	SIDE JUMPER, INSULATED, 10 POLE	ALLEN-BRADLEY		7
1	1492-N37 OR APPROVED EQUAL	END BARRIER	ALLEN-BRADLEY		8
6	1492-J3 OR APPROVED EQUAL	TERMINAL, 600V, GREY, SINGLE CIRCUIT FEED THROUGH			9
6	1492-J3-G OR APPROVED EQUAL	TERMINAL, 600V, GREEN, SINGLE CIRCUIT FEED THROUGH	ALLEN-BRADLEY		10
2	1492-SJ5B-10 OR APPROVED EQUAL	SIDE JUMPER, INSULATED, 10 POLE	ALLEN-BRADLEY		11
2	1492-EBJ3 OR APPROVED EQUAL	END BARRIER	ALLEN-BRADLEY		12
AR	199-DR1 OR APPROVED EQUAL	RAIL, MOUNTING, STEEL	ALLEN-BRADLEY		13
2	1492-ERL35 OR APPROVED EQUAL	END ANCHOR	ALLEN-BRADLEY		14

GENERAL NOTES

1. EQUIPMENT SHALL BE INSTALLED PER MANUFACTURER'S INSTRUCTIONS USING THE APPROPRIATE HARDWARE.
2. NAMEPLATE SHALL BE 1/16" THK MATTE FINISH LAMINATED PLASTIC WHITE SURFACE/BLACK CORE. BOND IN PLACE WHERE POSSIBLE.
3. ALL WIRES AND CABLE SHALL BE LABELED AT BOTH TERMINATIONS.

NAMEPLATE ENGRAVING SCHEDULE

ITEM	SIZE	CHAR SIZE	ENGRAVING
A	3" W x 1 H"	3/16"	PJB-12
B	1" W x 0.5 H"	1/4"	TB1

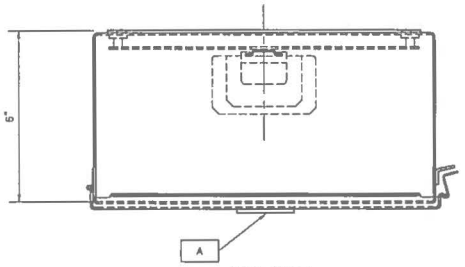

TOP VIEW

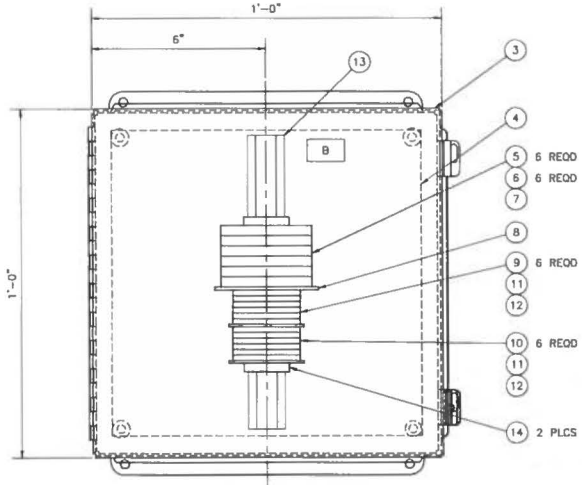

FRONT VIEW

1 PJB-12

1 C55864-E-1004 PJB-12 DETAIL

SCALE: NONE

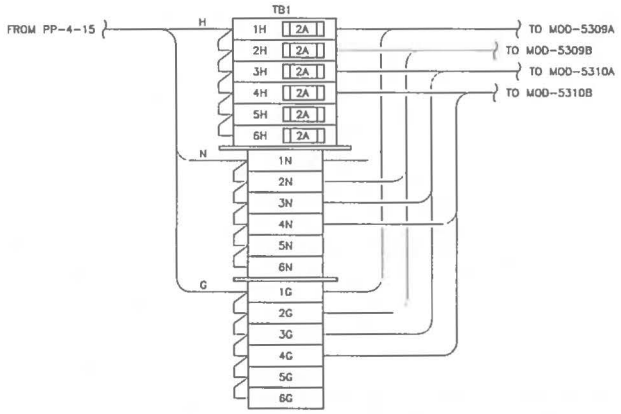

PJB-12 WIRING DIAGRAM

SCALE: NONE

NO	DATE	CLASS REV	ADC	DESCRIPTION	DWN	DES	CHKD	SUB	APP

AECOM

RLWTF-UP LOW LEVEL WASTE SUBPROJECT

PJB-12 PANEL LAYOUT

DRAWN V DAWSON
DESIGN S MOORE
CHECKED G MOE
DATE 5/8/14

BLDG. 251 TA-50

SUBMITTED MANNY TARIN

APPROVED FOR RELEASE ED ARTIGLIA

Los Alamos NATIONAL LABORATORY PO Box 1663 Los Alamos, New Mexico 87545

SHEET E-5203

96 OF 118

CLASSIFICATION REVIEWER DATE

PROJECT ID 100761

DRAWING NO C55865

REV 0

18521 :

File Location: P:\RLWTF LOW-LEVEL WASTE FACILITY\300 CAD\C55865 CUR\SHEETS\16 ELECTRICAL\55865-E-5203-R0.DWG
Plotted By: DAWSON, VANESSA Plot Date: Friday, May 02, 2014

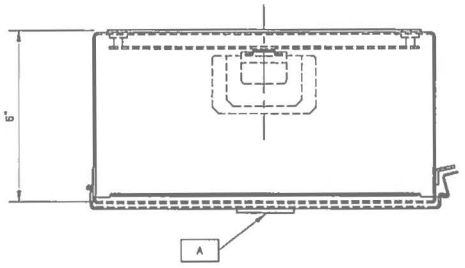

TOP VIEW

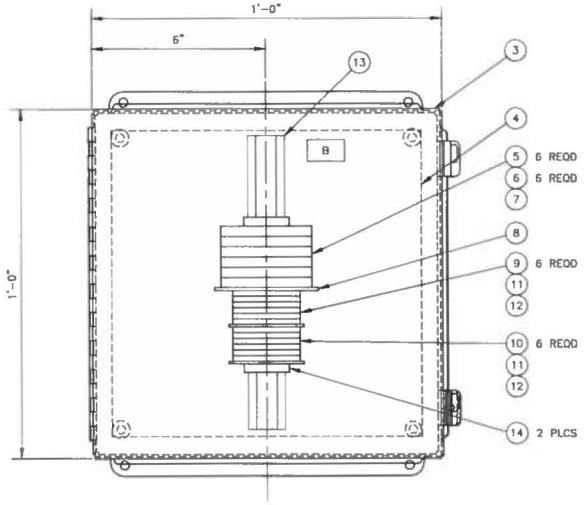

FRONT VIEW

1 PJB-10

1 / E-1200 PJB-10 DETAIL

SCALE: NONE

PARTS LIST/MATERIAL LIST

QTY REQD	PARTS / DWN NUMBER	NOMENCLATURE/DESCRIPTION	MATERIAL/REFERENCE	SHEET	ITEM NO.
X	-010	PJB-10 POWER JUNCTION BOX			1
					2
1	A1212CH OR APPROVED EQUAL	ENCLOSURE, 12"x12"x6" NEMA TYPE 12, SINGLE DOOR	HOFFMAN		3
1	A12P12 OR APPROVED EQUAL	BACK PANEL, 10.75" X 10.88"	HOFFMAN		4
6	1492-H6 OR APPROVED EQUAL	FUSE BLOCK, 300V, 12A MAX	ALLEN-BRADLEY		5
6		FUSE, .25" X 1.25", 2A	--		6
1	1492-SJFB8-10 OR APPROVED EQUAL	SIDE JUMPER, INSULATED, 10 POLE	ALLEN-BRADLEY		7
1	1492-N37 OR APPROVED EQUAL	END BARRIER	ALLEN-BRADLEY		8
6	1492-J3 OR APPROVED EQUAL	TERMINAL, 600V, GREY, SINGLE CIRCUIT FEED THROUGH			9
6	1492-J3-G OR APPROVED EQUAL	TERMINAL, 600V, GREEN, SINGLE CIRCUIT FEED THROUGH	ALLEN-BRADLEY		10
2	1492-SJ5B-10 OR APPROVED EQUAL	SIDE JUMPER, INSULATED, 10 POLE	ALLEN-BRADLEY		11
2	1492-EBJ3 OR APPROVED EQUAL	END BARRIER	ALLEN-BRADLEY		12
AR	199-DR1 OR APPROVED EQUAL	RAIL, MOUNTING, STEEL	ALLEN-BRADLEY		13
2	1492-ERL35 OR APPROVED EQUAL	END ANCHOR	ALLEN-BRADLEY		14

GENERAL NOTES

1. EQUIPMENT SHALL BE INSTALLED PER MANUFACTURER'S INSTRUCTIONS USING THE APPROPRIATE HARDWARE.
2. NAMEPLATE SHALL BE 1/16" THK MATTE FINISH LAMINATED PLASTIC WHITE SURFACE/BLACK CORE. BOND IN PLACE WHERE POSSIBLE.
3. ALL WIRES AND CABLE SHALL BE LABELED AT BOTH TERMINATIONS.

NAMEPLATE ENGRAVING SCHEDULE

ITEM	SIZE	CHAR SIZE	ENGRAVING
A	3" W x 1 H"	3/16"	PJB-10
B	1" W x 0.5 H"	1/4"	TB1

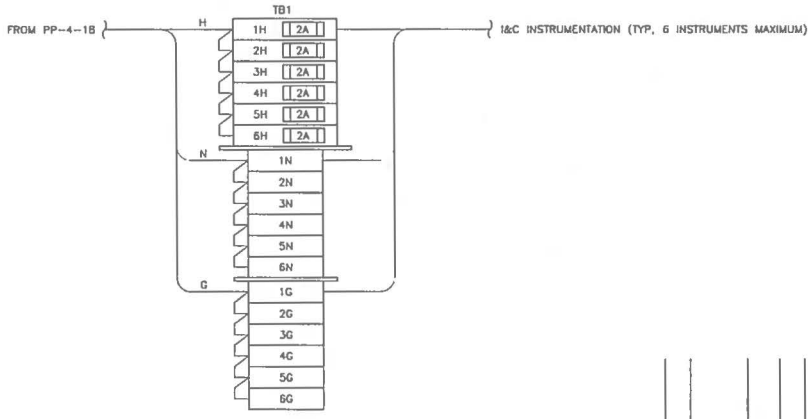

PJB-10 WIRING DIAGRAM

NO	DATE	CLASS REV	ADC	DESCRIPTION	DWN	DES	CHKD	SUB	APP

AECOM

RLWTF-UP LOW LEVEL WASTE SUBPROJECT

PJB-10 PANEL LAYOUT

DRAWN	V DAVISON	
DESIGN	S MOORE	
CHECKED	G MOE	
DATE	5/8/14	

BLDG. 251 TA-50

SUBMITTED MANNY TARIN

APPROVED FOR RELEASE ED ARTIGLIA

Los Alamos NATIONAL LABORATORY PO Box 1663 Los Alamos, New Mexico 87545

SHEET E-5204

97 OF 118

CLASSIFICATION REVIEWER DATE

PROJECT ID 100761

DRAWING NO C55865

REV 0

28527 :

File Location: P:\RLWTF LOW-LEVEL WASTE FACILITY\500 CAD\C55865 CUR\SHEETS\18 ELECTRICAL\55865-E-5204-R0.DWG
Plotted By: DAVISON, VANESSA, Plot Date: Friday, May 02, 2014

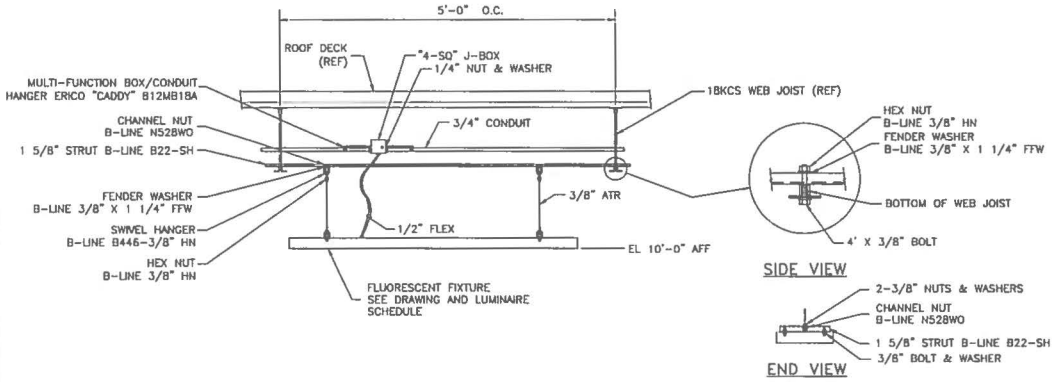

1 E-1201 TYPE "A" FIXTURE MOUNTING DETAIL
SCALE: NONE

NO	DATE	CLASS REV	ADC	DESCRIPTION	DWN	DES	CHKD	SUB	APP

AECOM

RLWTF-UP LOW LEVEL WASTE SUBPROJECT

LIGHTING DETAILS

DRAWN	V DAVISON
DESIGN	S MOORE
CHECKED	G MOE
DATE	5/6/14

BLDG. 251 TA-50

SUBMITTED MANNY TARIN

APPROVED FOR RELEASE ED ARTIGLIA

Los Alamos NATIONAL LABORATORY PO Box 1663 Los Alamos, New Mexico 87545

SHEET E-5208

98 OF 118

CLASSIFICATION | REVIEWER | DATE

PROJECT ID 100761 | DRAWING NO C55865 | REV 0

File Location: P:\RLWTF LOW-LEVEL WASTE FACILITY\500 CAD\C55865 CUB\SHEETS\16 ELECTRICAL\55865-E-5208-R0.DWG
Plotted By: DAVISON, VANESSA; Plot Date: Friday, May 02, 2014

: 12583

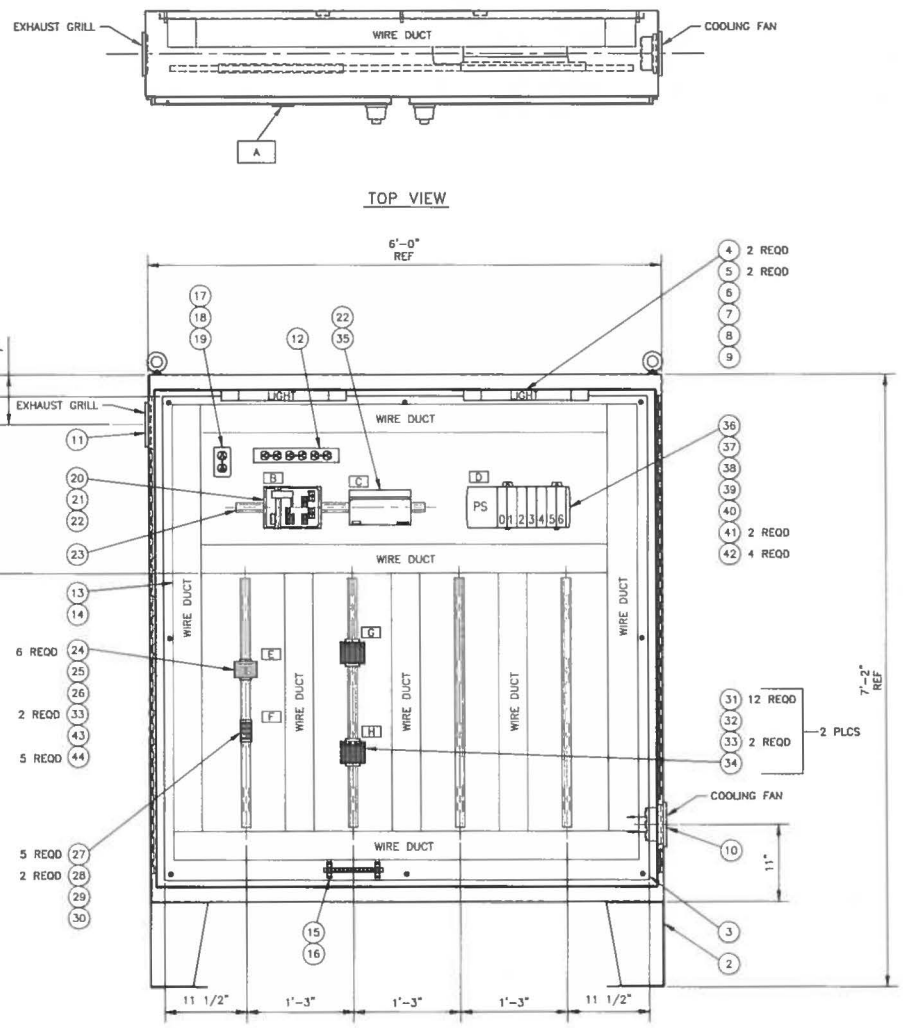

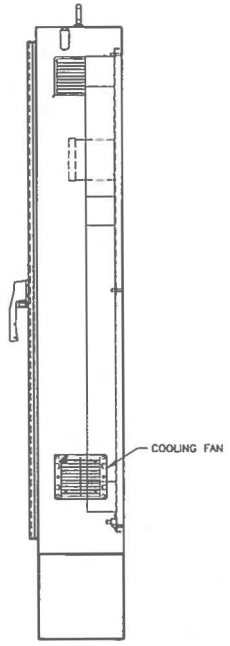

1 CAB-103

1 E-1200 1 E-1210 CAB-103 DETAIL (DOORS NOT SHOWN)

1 1/2"=1'-0"

GENERAL NOTES

1. EQUIPMENT SHALL BE INSTALLED PER MANUFACTURER'S INSTRUCTIONS USING THE APPROPRIATE HARDWARE.
2. ALL WIRES AND CABLE SHALL BE LABELED AT BOTH TERMINATIONS.
3. ENCLOSURE AND ENCLOSURE DOORS SHALL BE ATTACHED TO GROUND.
4. SEE SHEET E-5202B FOR PARTS LIST/MATERIAL LIST AND NAMEPLATE ENGRAVING SCHEDULE.
5. SEE SHEET E-6152 FOR I/O SLOT ASSIGNMENTS.
6. SEE SHEET E-6168A AND E-6168B FOR PANEL TERMINATION.
7. SEE SHEET E-6213 FOR INSTRUMENT ELECTRICAL DISTRIBUTION.
8. IF THIS SHEET IS NOT 24"X36", THEN IT IS A REDUCED SIZE PLOT. USE THE GRAPHIC SCALE ACCORDINGLY.

NO	DATE	CLASS REV	ADC	DESCRIPTION	DWN	DES	CHKD	SUB	APP

AECOM

RLWTF-UP LOW LEVEL WASTE SUBPROJECT

CAB-103 PANEL LAYOUT

DRAWN	V DAVISON
DESIGN	S MOORE
CHECKED	G MOE
DATE	5/8/14

BLDG. 251 TA-50

SUBMITTED MANNY TARIN

APPROVED FOR RELEASE ED ARTIGLIA

Los Alamos NATIONAL LABORATORY PO Box 1663 Los Alamos, New Mexico 87545

SHEET E-5210A

99 OF 118

CLASSIFICATION REVIEWER DATE

PROJECT ID 100761 DRAWING NO C55865 REV 0

File Location: P:\RLWTF LOW-LEVEL WASTE FACILITY\500 CAD\C55865 CUB\SHEETS\16 ELECTRICAL\55865-E-5210A-R0.DWG
Plotted By: DAVISON, VANESSA; Plot Date: Friday, May 02, 2014

: 12584

PARTS LIST/MATERIAL LIST

QTY REQD	PARTS / DWG NUMBER	NOMENCLATURE/DESCRIPTION	MATERIAL/REFERENCE	SHEET	ITEM NO.
X	-010	CAB-103 CABINET			1
1	A74H7212LP3PT OR APPROVED EQUAL	ENCLOSURE FREE STANDING 74"x72"x12" NEMA TYPE 4, TWO DOOR, FLOOR STANDS	HOFFMAN		2
1	A72P72 OR APPROVED EQUAL	BACK PANEL 68" X 68"	HOFFMAN		3
2	LF120V18	18" FLUORESCENT LIGHT ENCLOSURE	HOFFMAN		4
2	F8T5	18" FLUORESCENT BULB	HOFFMAN		5
1	LF120VCORD	FLUORESCENT LIGHT POWER CORD	HOFFMAN		6
1	ALFSWD	DOOR ACTIVATED SWITCH	HOFFMAN		7
1	LGCABLE24	GANGING CABLE, 24"	HOFFMAN		8
1	LDSWITCH18	DOOR SWITCH CABLE, 18"	HOFFMAN		9
1	TFP41	COOLING FAN PACKAGE, 4" FAN, AND TYPE 1 FILTER	HOFFMAN		10
1	TEP4	EXHAUST GRILL & FILTER, TYPE 1	HOFFMAN		11
1	DP1N120615	POWER OUTLET STRIP	HOFFMAN		12
AR	G4X4WH6 OR APPROVED EQUAL	WIRE DUCT, WIDE SLOT, WHITE, 4.25" X 4.1"	PANDUIT		13
AR	C4WH6 OR APPROVED EQUAL	COVER, WHITE	PANDUIT		14
1	UGB2/0-414-12	GROUNDING BAR, 12 PORT	PANDUIT		15
1	UGB-B-SO	BONDING STAND-OFF	PANDUIT		16
1	5262G	DUPLEX RECEPTACLE, NEMA 5-15R, GRAY	HUBBELL		17
1	660	HANDY BOX, 4" X 2" X 1-7/8"	RACO		18
1	864	HANDY BOX COVER, DUPLEX RECEPTACLE	RACO		19
1	IE-3000-8TC	8-PORT 10/100 ETHERNET SWITCH	CISCO		20
1	PWR-IE3000-AC	POWER CONVERTER	CISCO		21
2	5625.072.1731	POWER CORC, 5-15P TO ROJ, 18/3, 6FT	AMERICORD		22
AR	199-DR1 OR APPROVED EQUAL	RAIL, MOUNTING, STEEL	ALLEN-BRADLEY		23
6	1492-H6	FUSE BLOCK, 300V, 12A MAX	ALLEN-BRADLEY		24
1	1492-N37	END BARRIER	ALLEN-BRADLEY		25
AR	1492-N49	SIDE JUMPER, FANNING STRIP, 10 POLE	ALLEN-BRADLEY		26
5	1492-HM1BL	TERMINAL BLOCK, 600V, 30A MAX	ALLEN-BRADLEY		27
2	1492-EAH35	END ANCHOR	ALLEN-BRADLEY		28
1	1492-NM36	END BARRIER	ALLEN-BRADLEY		29
AR	1492-N39	SIDE JUMPER, FANNING STRIP, 50 POLE	ALLEN-BRADLEY		30
24	1492-JT3M OR APPROVED EQUAL	TERMINAL, 300V, 3 LEVEL/3 CIRCUIT, WITH GROUND POINT	ALLEN-BRADLEY		31
2	1492-EBJ3TM OR APPROVED EQUAL	END BARRIER	ALLEN-BRADLEY		32
6	1492-EAHJ35 OR APPROVED EQUAL	END ANCHOR	ALLEN-BRADLEY		33
AR	1492-SJ6A-50	INSULATED SIDE JUMPER, 50 POLE	ALLEN-BRADLEY		34
1	1606XL480E	POWER SUPPLY, 480W, 24-28V	ALLEN-BRADLEY		35
1	1756-A7	7 SLOT CONTROLOGIX CHASSIS	ALLEN-BRADLEY		36
1	1756-PA75	85-255V AC POWER SUPPLY (5V@13A)	ALLEN-BRADLEY		37
1	1756-ENBT	ETHERNET BRIDGE MODULE	ALLEN-BRADLEY		38
1	1756-IB16I	10-30VDC ISOLATED INPUT 16 PTS (36 PIN)	ALLEN-BRADLEY		39
1	1756-IF16	ANALOG INPUT CURRENT/VOLTAGE 16PTS (36 PIN)	ALLEN-BRADLEY		40
2	1756-TBCH	36 PIN SCREW CLAMP BLOCK WITH STANDARD HOUSING	ALLEN-BRADLEY		41
4	1756-N2	EMPTY SLOT FILLER CARD	ALLEN-BRADLEY		42
1		FUSE, 5.0A	--		43
5		FUSE, 0.5A	--		44

NAMEPLATE ENGRAVING SCHEDULE

ITEM	SIZE	CHAR SIZE	ENGRAVING
A	3" W x 1" H	3/8"	CAB-103
B	3" W x 1" H	3/8"	SW6
C	3" W x 1" H	3/8"	PS1
D	3" W x 1" H	3/8"	NODE 8
E	1" W x 0.5" H	1/4"	PB1
F	1" W x 0.5" H	1/4"	RTN1
G	1" W x 0.5" H	1/4"	TB1
H	1" W x 0.5" H	1/4"	TB2
J	1" W x 0.5" H	1/4"	TB3
K	1" W x 0.5" H	1/4"	TB4

GENERAL NOTES

1. NAMEPLATE SHALL BE 1/16" THK MATTE FINISH LAMINATED PLASTIC WHITE SURFACE/BLACK CORE. BOND IN PLACE WHERE POSSIBLE.

NO	DATE	CLASS REV	ADC	DESCRIPTION	DWN	DES	CHKD	SUB	APP

AECOM

RLWTF-UP LOW LEVEL WASTE SUBPROJECT

CAB-103 PANEL LAYOUT

DRAWN: V DAVISON
DESIGN: S MOORE
CHECKED: G MOE
DATE: 5/6/14

BLDG. 251 TA-50

SUBMITTED: MANNY TARIN
APPROVED FOR RELEASE: ED ARTIGLIA

Los Alamos NATIONAL LABORATORY
PO Box 1663 Los Alamos, New Mexico 87545

SHEET: E-5210B
100 OF 118

CLASSIFICATION | REVIEWER | DATE

PROJECT ID: 100761
DRAWING NO: C55865
REV: 0

58521

File Location: P:\RLWTF LOW-LEVEL WASTE FACILITY\300 CAD\C55865 DUB\SHEETS\16 ELECTRICAL\55865-E-5210B-RD.DWG
Plotted By: DAVISON, VANESSA Plot Date: Friday, May 02, 2014

CAB-103: NETWORK 1, NODE 7

SLOT 0	SLOT 1		SLOT 2	SLOT 3		SLOT 4	SLOT 5	SLOT 6
1756-ENBT ETHERNET BRIDGE	DI_7_1 1756-IB16I 16 PT 10V-30V DC ISOLATED INPUT, SINK/SOURCE		EMPTY	AI_7_3 1756-IF16 16 CHANNEL NON-ISOLATED VOLTAGE/CURRENT ANALOG IN		EMPTY	EMPTY	FS-RA-CLX-BAS BACNET INTERFACE
	0			0	PIT-5407			
	1			1				
	2			2	PIT-5603			
	3			3	PIT-5804			
	4			4	FIT-5600			
	5			5	AT-5810			
	6			6	FIT-5811			
	7			7				
	8			8				
	9			9				
	10			10				
	11			11				
	12			12				
	13			13				
	14			14				
	15			15				

NO	DATE	CLASS REV	ADC	DESCRIPTION	DWN	DES	CHKD	SUB	APP

AECOM

RLWTF-UP LOW LEVEL WASTE SUBPROJECT

CAB-103 NODE 7 I/O MODULE DISTRIBUTION

BLDG. 251 TA-50

DRAWN	V DAVISON
DESIGN	S MOORE
CHECKED	G MOE
DATE	5/8/14

SUBMITTED MANNY TARIN

APPROVED FOR RELEASE ED ARTIGLIA

Los Alamos NATIONAL LABORATORY PO Box 1663 Los Alamos, New Mexico 87545

SHEET E-6152

101 OF 118

CLASSIFICATION | REVIEWER | DATE

PROJECT ID 100761

DRAWING NO C55865

REV 0

Plot Scale: 1:1.25
Plot Date: Friday, May 02, 2014
Plotted By: DAVISON, VANESSA
Plot Name: P:\RLWTF - LOW-LEVEL WASTE FACILITY\500 CAD\C55865 CAD\SHEETS\16 ELECTRICAL\55865-E-6152-R0.DWG

File Location: P:\RLWTF LOW-LEVEL WASTE FACILITY\300 CAD\C55865 CUB\SHEETS\16 ELECTRICAL\55865-E-6168A-R0.DWG
Plotted By: DAVISON, VANESSA; Plot Date: Friday, May 02, 2014

GENERAL NOTES

1. SEE SHEET E-5210A & E-5210B FOR PANEL LAYOUT DETAILS.

NO	DATE	CLASS REV	ADC	DESCRIPTION	DWN	DES	CHKD	SUB	APP

AECOM

RLWTF-UP LOW LEVEL WASTE SUBPROJECT

CAB-103 PANEL TERMINATION

TA-50 BLDG. 251

SUBMITTED: MANNY TAPIA

APPROVED FOR RELEASE: ED ARTEAGA

DESIGN: S MOORE

DRAWN: V DAVISON

CHECKED: G MOK

DATE: 5/6/14

Los Alamos NATIONAL LABORATORY

PO Box 1663 Los Alamos, New Mexico 87545

CLASSIFICATION: UNCLASSIFIED

PROJECT ID: 100761

REVIEWER:

DRAWING NO: C55865

SHEET: E-6168A

DATE: 102 OF 118

REV: 0

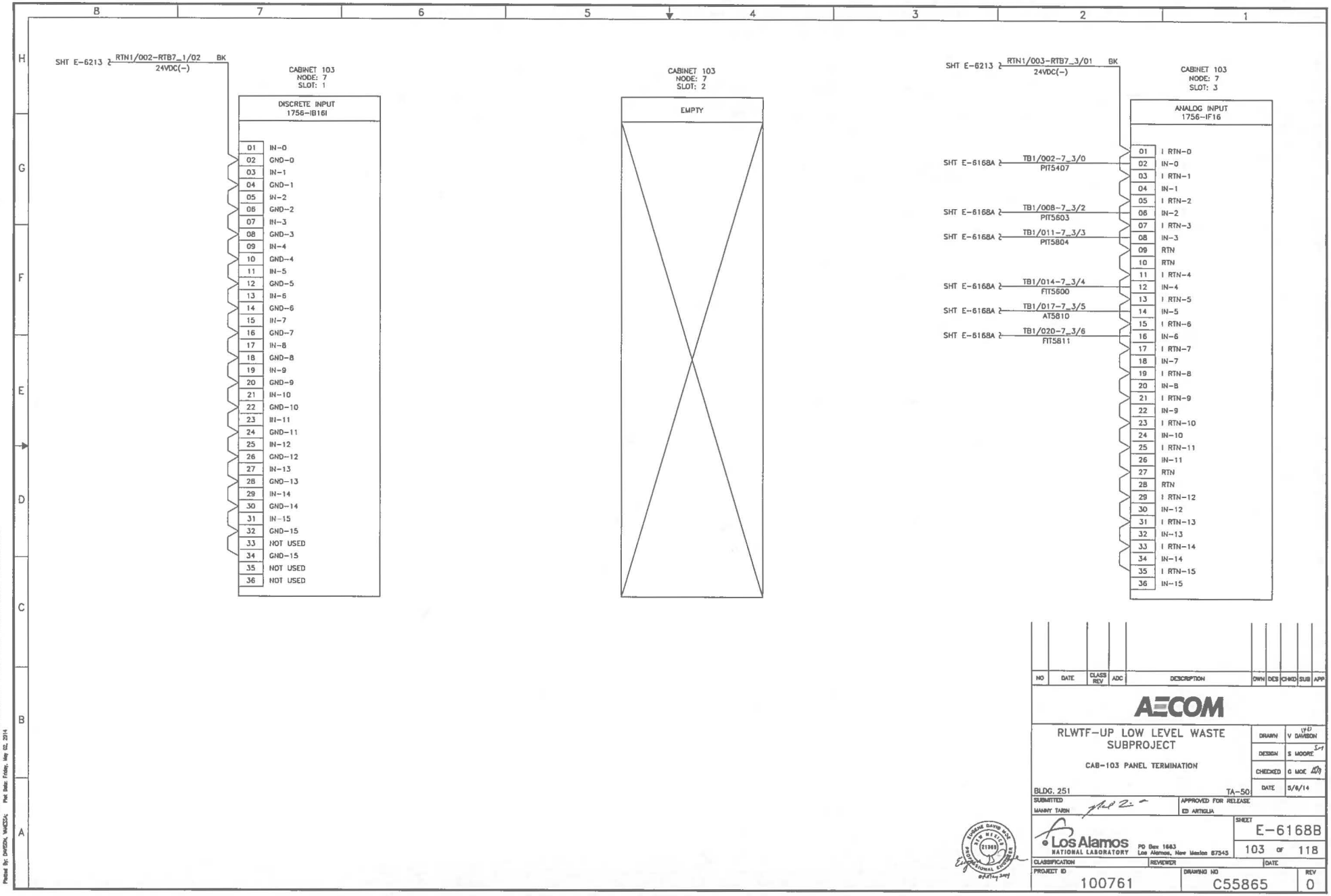
SHT E-6213 RTN1/002-RTB7_1/02 BK
24VDC(-)
CABINET 103
NODE: 7
SLOT: 1
DISCRETE INPUT
1756-IB16I
01 IN-0
02 GND-0
03 IN-1
04 GND-1
05 IN-2
06 GND-2
07 IN-3
08 GND-3
09 IN-4
10 GND-4
11 IN-5
12 GND-5
13 IN-6
14 GND-6
15 IN-7
16 GND-7
17 IN-8
18 GND-8
19 IN-9
20 GND-9
21 IN-10
22 GND-10
23 IN-11
24 GND-11
25 IN-12
26 GND-12
27 IN-13
28 GND-13
29 IN-14
30 GND-14
31 IN-15
32 GND-15
33 NOT USED
34 GND-15
35 NOT USED
36 NOT USED
CABINET 103
NODE: 7
SLOT: 2
EMPTY
SHT E-6213 RTN1/003-RTB7_3/01 BK
24VDC(-)
CABINET 103
NODE: 7
SLOT: 3
ANALOG INPUT
1756-IF16
SHT E-6168A TB1/002-7_3/0 PIT5407
SHT E-6168A TB1/008-7_3/2 PIT5603
SHT E-6168A TB1/011-7_3/3 PIT5804
SHT E-6168A TB1/014-7_3/4 FIT5600
SHT E-6168A TB1/017-7_3/5 AT5810
SHT E-6168A TB1/020-7_3/6 FIT5811
01 I RTN-0
02 IN-0
03 I RTN-1
04 IN-1
05 I RTN-2
06 IN-2
07 I RTN-3
08 IN-3
09 RTN
10 RTN
11 I RTN-4
12 IN-4
13 I RTN-5
14 IN-5
15 I RTN-6
16 IN-6
17 I RTN-7
18 IN-7
19 I RTN-8
20 IN-8
21 I RTN-9
22 IN-9
23 I RTN-10
24 IN-10
25 I RTN-11
26 IN-11
27 RTN
28 RTN
29 I RTN-12
30 IN-12
31 I RTN-13
32 IN-13
33 I RTN-14
34 IN-14
35 I RTN-15
36 IN-15
NO DATE CLASS REV ADC DESCRIPTION DWN DES CHKD SUB APP
AECOM
RLWTF-UP LOW LEVEL WASTE SUBPROJECT
CAB-103 PANEL TERMINATION
DRAWN V DAVISON
DESIGN S MOORE
CHECKED G MOE
DATE 5/8/14
BLDG. 251 TA-50
SUBMITTED MANNY TARIN
APPROVED FOR RELEASE ED ARTIGLIA
Los Alamos NATIONAL LABORATORY PO Box 1663 Los Alamos, New Mexico 87545
SHEET E-6168B
103 OF 118
CLASSIFICATION REVIEWER DATE
PROJECT ID 100761
DRAWING NO C55865
REV 0
File Location: P:\RLWTF LOW-LEVEL WASTE FACILITY\300 CAD\C55865 DWG\SHEETS\16 ELECTRICAL\55865-E-61688-R0.DWG
Plotted By: DAVISON, VANESSA; Plot Date: Friday, May 02, 2014
25588

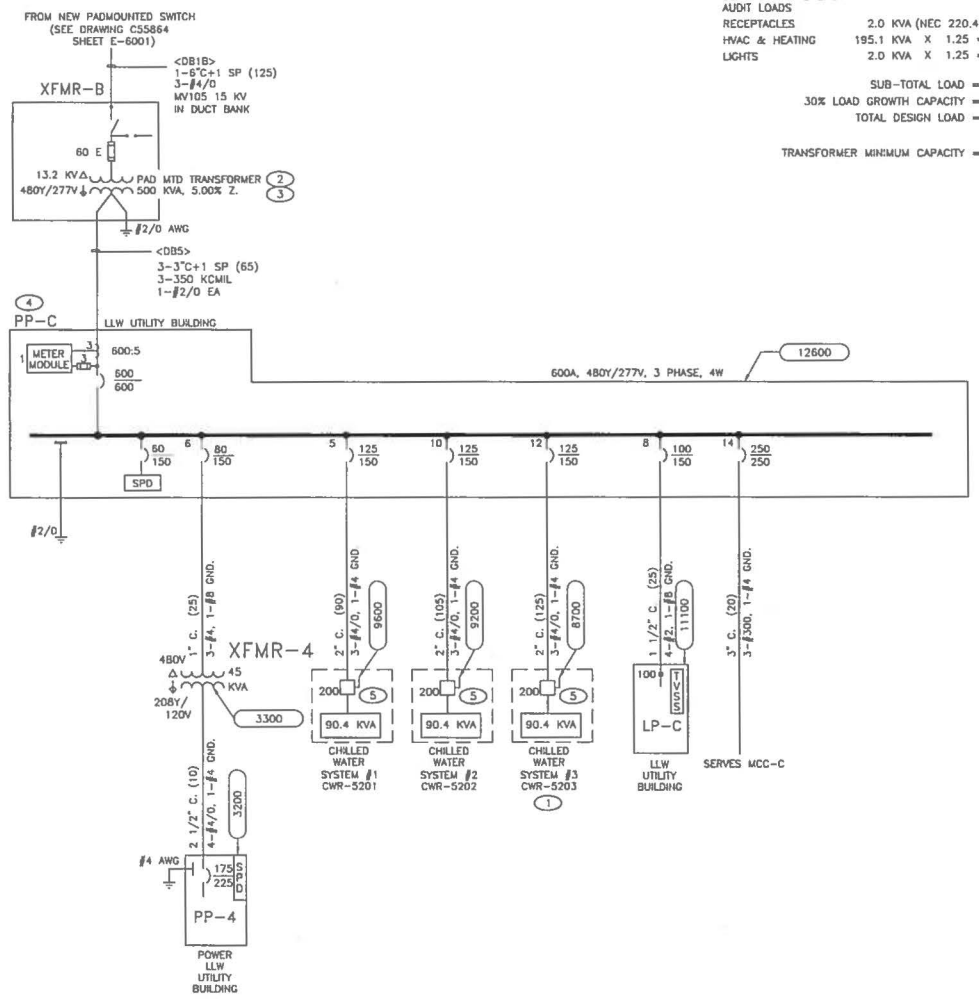

PP-C ONE-LINE DIAGRAM

SCALE: NONE

ELECTRICAL LOAD SUMMARY

(6)	CONNECTED LOAD	LOAD FACTOR	DESIGN LOAD
LARGEST KVA MOTOR	44.6 KVA	X 1.25 =	55.7 KVA
REMAINING MOTORS	120.8 KVA (NEC 220.60)		57.8 KVA
GENERAL AND ENERGY AUDIT LOADS	95.4 KVA		5.4 KVA
RECEPTACLES	2.0 KVA (NEC 220.44)		2.0 KVA
HVAC & HEATING	195.1 KVA	X 1.25 =	243.9 KVA
LIGHTS	2.0 KVA	X 1.25 =	2.5 KVA
		SUB-TOTAL LOAD =	367.3 KVA
		30% LOAD GROWTH CAPACITY =	110.2 KVA
		TOTAL DESIGN LOAD =	477.5 KVA, 574.3 AMPS
		TRANSFORMER MINIMUM CAPACITY =	500 KVA

GENERAL NOTES

1. SEE SHEET E-0201 FOR SYMBOLS AND ABBREVIATIONS.
2. (39000) = AVAILABLE 3ø FAULT CURRENT (RMS, SYM. AMPS).
3. (75) = CIRCUIT LENGTH IN FEET.
4. <DB5> = REFERENCE TO DUCT BANK SIZING CALCULATION.
5. SURGE PROTECTIVE DEVICE REQUIREMENTS AND TYPE IDENTIFIED IN SPECIFICATION SECTION 26 4300.
6. PHASE CONDUCTORS FOR ABOVE GROUND FEEDERS LARGER THAN #1/0 AWG ARE ALUMINUM OR COPPER-CLAD ALUMINUM. SEE CONDUIT AND WIRE SCHEDULE FOR CONDUCTOR TYPES.

KEYED NOTES

1. NORMALLY OFF BACKUP CHILLER.
2. LANL MAINTENANCE AND SITE SERVICES WILL FURNISH AND INSTALL PAD MOUNTED TRANSFORMER AND MV CABLE.
3. PAD MOUNTED TRANSFORMER SHALL CONTAIN LESS THAN 500 GALLONS OF MINERAL OIL. CONTAINMENT IS NOT REQUIRED AT THE TRANSFORMER PAD.
4. SERVICE ENTRANCE RATED.
5. DISCONNECT SWITCH PROVIDED WITH EQUIPMENT.
6. CONNECTED AND DESIGN LOAD VALUES OBTAINED FROM ELECTRICAL SYSTEM ANALYSIS CALCULATION.

"PRIORITY DRAWING"

NO	DATE	CLASS REV	ADC	DESCRIPTION	DWN	DES	CHKD	SUB	APP

AECOM

RLWTF-UP LOW LEVEL WASTE SUBPROJECT

PP-C ONE-LINE DIAGRAM

BLDG. 251 TA-50

DRAWN	V DAVISON
DESIGN	S MOORE
CHECKED	G MOE
DATE	5/9/14

SUBMITTED MANNY TARIN — APPROVED FOR RELEASE ED ARTIGLIA

Los Alamos NATIONAL LABORATORY — PO Box 1663 Los Alamos, New Mexico 87545

SHEET E-6200

104 OF 118

CLASSIFICATION | REVIEWER | DATE

PROJECT ID 100761 | DRAWING NO C55865 | REV 0

68571 :

File Location: P:\RLWTF LOW LEVEL WASTE FACILITY\100-CADD\SMS OUTSHEET\E118 ELECTRICAL\SMS E-6200.MS DWG
Plotted By: DAVSON, WESLEY Plot Date: Friday, May 02, 2014

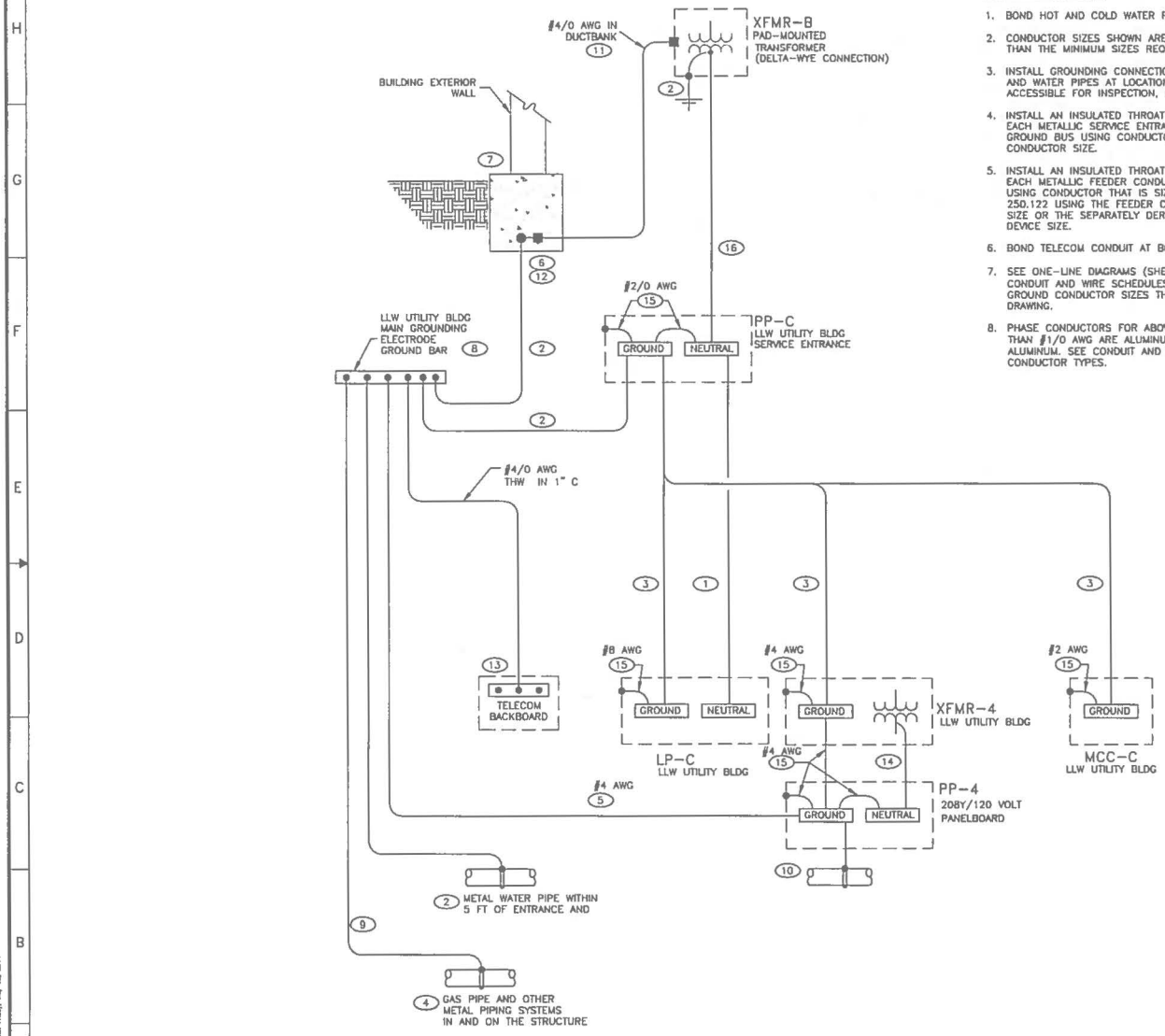

GROUNDING SYSTEM DIAGRAM

SCALE: NONE

GENERAL NOTES

1. BOND HOT AND COLD WATER PIPING SYSTEMS.
2. CONDUCTOR SIZES SHOWN ARE MINIMUM AND MAY BE LARGER THAN THE MINIMUM SIZES REQUIRED BY NEC.
3. INSTALL GROUNDING CONNECTIONS TO BUILDING STRUCTURE AND WATER PIPES AT LOCATIONS THAT ARE VISIBLE AND ACCESSIBLE FOR INSPECTION, MAINTENANCE, AND TESTING.
4. INSTALL AN INSULATED THROAT GROUNDING BUSHING ON EACH METALLIC SERVICE ENTRANCE CONDUIT. BOND TO GROUND BUS USING CONDUCTOR. USING THE SERVICE PHASE CONDUCTOR SIZE.
5. INSTALL AN INSULATED THROAT GROUNDING BUSHING ON EACH METALLIC FEEDER CONDUIT. BOND TO GROUND BUS USING CONDUCTOR THAT IS SIZED BASED ON NEC TABLE 250.122 USING THE FEEDER CIRCUIT OVERCURRENT DEVICE SIZE OR THE SEPARATELY DERIVED SYSTEM OVERCURRENT DEVICE SIZE.
6. BOND TELECOM CONDUIT AT BOTH ENDS.
7. SEE ONE-LINE DIAGRAMS (SHEET E-6200 AND E-6202) AND CONDUIT AND WIRE SCHEDULES (SHEET E-7203) FOR GROUND CONDUCTOR SIZES THAT ARE NOT SHOWN ON THIS DRAWING.
8. PHASE CONDUCTORS FOR ABOVE GROUND FEEDERS LARGER THAN #1/0 AWG ARE ALUMINUM OR COPPER-CLAD ALUMINUM. SEE CONDUIT AND WIRE SCHEDULE FOR CONDUCTOR TYPES.

KEYED NOTES

1. INSTALL GROUNDED CONDUCTOR (NEUTRAL) SAME SIZE AS THE LARGEST PHASE CONDUCTOR.
2. INSTALL #2/0 AWG COPPER GROUNDING ELECTRODE CONDUCTOR. SIZE IS BASED ON NEC TABLE 250.66 USING THE SERVICE PHASE CONDUCTOR SIZE.
3. INSTALL EQUIPMENT GROUNDING CONDUCTOR SIZED BASED ON NEC TABLE 250.122 USING THE FEEDER OVERCURRENT DEVICE SIZE.
4. BOND TO GAS PIPE ON THE BUILDING SIDE OF THE GAS METER.
5. INSTALL GROUNDING ELECTRODE CONDUCTOR. SIZE IS BASED ON NEC TABLE 250.66 USING THE SEPARATELY DERIVED SYSTEM PHASE CONDUCTOR SIZE.
6. INSTALL A CONCRETE ENCASED MAIN GROUNDING ELECTRODE IN BUILDING FOUNDATION AROUND ENTIRE BUILDING PERIMETER. LOCATE ELECTRODE IN BOTTOM ONE-THIRD OF FOUNDATION WITH AT LEAST 3 INCHES OF CONCRETE COVER. USE #4/0 AWG BARE COPPER CABLE.
7. BUILDING EXTERIOR WALL IS CONCRETE BLOCK. BOND ANY STRUCTURAL STEEL COLUMNS TO THE MAIN GROUNDING ELECTRODE GROUND BAR USING #4/0 AWG.
8. INSTALL MAIN GROUNDING ELECTRODE GROUND BAR FOR SINGLE POINT GROUNDING. SEE SHEET E-1202 FOR LOCATION. MAKE CONNECTIONS USING TWO-HOLE COMPRESSION SPADE LUGS THAT MEET IEEE 837 REQUIREMENTS. LABEL EACH CONNECTION TO THE GROUND BAR.
9. INSTALL BONDING JUMPER THAT IS SIZED BASED ON NEC TABLE 250.66 USING THE LARGEST SERVICE OR SEPARATELY DERIVED SYSTEM PHASE CONDUCTOR.
10. BOND TO METAL PIPING SYSTEMS IN THE AREA SERVED BY THE SEPARATELY DERIVED SYSTEM.
11. BOND DUCTBANK CONCRETE ENCASED GROUND CONDUCTOR TO THE BUILDING GROUNDING ELECTRODE SYSTEM.
12. INSTALL IRREVERSIBLE COMPRESSION CONNECTOR WITH TAMPER-PROOF HARDWARE OR INSTALL EXOTHERMIC WELD.
13. INSTALL A COPPER GROUNDING BAR BY TELECOMMUNICATIONS BACKBOARD. CONNECT TO THE MAIN GROUNDING ELECTRODE GROUND BAR USING COMPRESSION SPADE LUGS.
14. INSTALL GROUNDED CONDUCTOR (NEUTRAL) THAT IS NOT LESS THAN THE PHASE CONDUCTOR AMPACITY.
15. INSTALL COPPER BONDING CONDUCTOR. SIZE IS BASED ON NEC TABLE 250.66 USING THE SERVICE OR SEPARATELY DERIVED SYSTEM PHASE CONDUCTOR SIZE.
16. INSTALL GROUNDED CONDUCTOR (NEUTRAL) WITH EACH PARALLEL SERVICE CONDUIT. SEE SHEET E-6200.

NO	DATE	CLASS REV	ADC	DESCRIPTION	DWN	DES	CHKD	SUB	APP

AECOM

RLWTF-UP LOW LEVEL WASTE SUBPROJECT

GROUNDING SYSTEM DIAGRAM

DRAWN	V DAWSON
DESIGN	S MOORE
CHECKED	G MOE
DATE	5/8/14

BLDG. 251 TA-50

SUBMITTED MANNY TARIN — APPROVED FOR RELEASE ED ARTIGLIA

Los Alamos NATIONAL LABORATORY PO Box 1663 Los Alamos, New Mexico 87545

SHEET E-6201

105 OF 118

CLASSIFICATION | REVIEWER | DATE

PROJECT ID 100761 | DRAWING NO C55865 | REV 0

C255905
File Location: P:\RLWTF LOW-LEVEL WASTE FACILITY\300 CAD\C55865 CUR\SHEETS\16 ELECTRICAL\55865-E-6201-R0.DWG
Plotted By: DAWSON, VANESSA; Plot Date: Friday, May 02, 2014

GENERAL NOTES

1. SEE LEGEND SHEET FOR SYMBOLS AND ABBREVIATIONS.
2. (39000) = AVAILABLE 3ø FAULT CURRENT (RMS, SYM. AMPS).
3. (75) = CIRCUIT LENGTH IN FEET.
4. FOR EACH MOTOR STARTER AND ADJUSTIBLE SPEED DRIVE SHOWN, PROVIDE BACNET COMPATIBLE COMMUNICATIONS INTERFACE TO PROVIDE REMOTE STATUS, START/STOP AND SPEED CONTROL FROM THE BAS.
5. UNLESS OTHERWISE NOTED, ALL DISCONNECT SWITCHES ARE PROVIDED AS PART OF THE EQUIPMENT SHOWN.
6. PROVIDE MOTOR CIRCUIT PROTECTORS WITH ADJUSTABLE TRIP SETTINGS WITHIN THE MAXIMUM SETTING ALLOWED BY NFPA 70 FOR INSTANTANEOUS TRIP BREAKERS.
7. PHASE CONDUCTORS FOR ABOVE GROUND FEEDERS LARGER THAN #1/0 AWG ARE ALUMINUM OR COPPER-CLAD ALUMINUM. SEE CONDUIT AND WIRE SCHEDULE FOR CONDUCTOR TYPES.

KEYED NOTES

(1) NORMALLY OFF BACKUP MOTOR.

(2) PROVIDE DISCONNECT SWITCH WITH AUXILIARY CONTACT FOR PUMP RUN PERMISSIVE INTERLOCK WITH ASD.

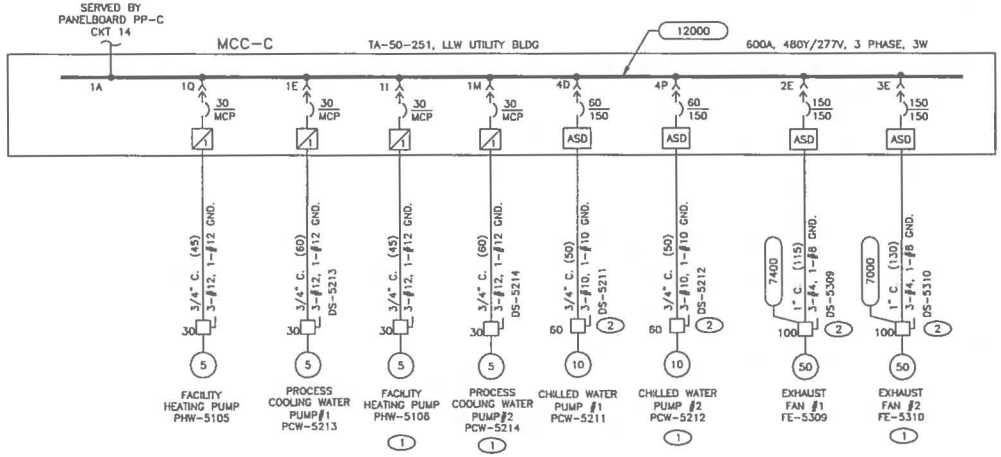

MCC-C ONE-LINE DIAGRAM

SCALE: NONE

"PRIORITY DRAWING"

NO	DATE	CLASS REV	ADC	DESCRIPTION	DWN	DES	CHKD	SUB	APP

AECOM

RLWTF-UP LOW LEVEL WASTE SUBPROJECT

MCC-C ONE-LINE DIAGRAM

BLDG. 251 TA-50

DRAWN	V DAVISON
DESIGN	S MOORE
CHECKED	G MOE
DATE	5/8/14

SUBMITTED MANNY TARIN

APPROVED FOR RELEASE ED ARTIGLIA

Los Alamos NATIONAL LABORATORY PO Box 1663 Los Alamos, New Mexico 87545

SHEET E-6202

106 OF 118

CLASSIFICATION | REVIEWER | DATE

PROJECT ID 100761 | DRAWING NO C55865 | REV 0

ENGINE DAVID MOE 21369 NEW MEXICO PROFESSIONAL ENGINEER

File Location: P:\RLWTF LOW-LEVEL WASTE FACILITY\300 CAD\C55865 CUS\SHEETS\16 ELECTRICAL\55865-E-6202-R0.DWG
Plotted By: DAVISON, WANESSA Plot Date: Friday, May 02, 2014

12591

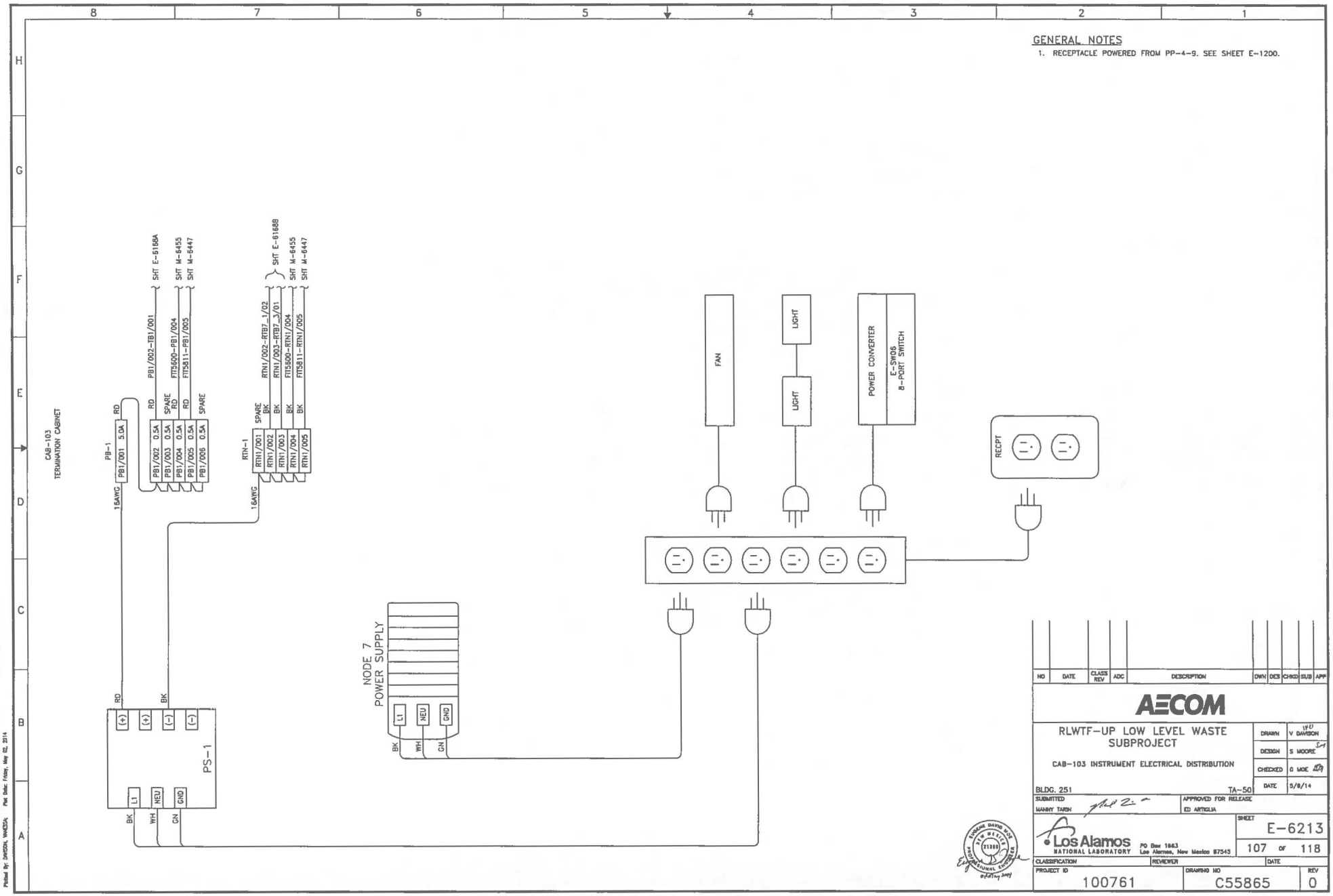
GENERAL NOTES
1. RECEPTACLE POWERED FROM PP-4-9. SEE SHEET E-1200.
CAB-103
TERMINATION CABINET
PB-1
PB1/001 5.0A
PB1/002 0.5A
PB1/003 0.5A
PB1/004 0.5A
PB1/005 0.5A
PB1/006 0.5A
PB1/002-TB1/001
FIT5600-PB1/004
FIT5811-PB1/005
SHT E-6168A
SHT M-6455
SHT M-6447
RTN-1
RTN1/001
RTN1/002
RTN1/003
RTN1/004
RTN1/005
RTN1/002-RTB7_1/02
RTN1/003-RTB7_3/01
FIT5600-RTN1/004
FIT5811-RTN1/005
SHT E-6168B
SHT M-6455
SHT M-6447
16AWG
RD
BK
SPARE
PS-1
L1
NEU
GND
WH
GN
NODE 7
POWER SUPPLY
FAN
LIGHT
LIGHT
POWER CONVERTER
E-SW06
8-PORT SWITCH
RECPT
RLWTF-UP LOW LEVEL WASTE SUBPROJECT
CAB-103 INSTRUMENT ELECTRICAL DISTRIBUTION
BLDG. 251
TA-50
AECOM
Los Alamos NATIONAL LABORATORY
PO Box 1663 Los Alamos, New Mexico 87545
E-6213
107 OF 118
100761
C55865
0

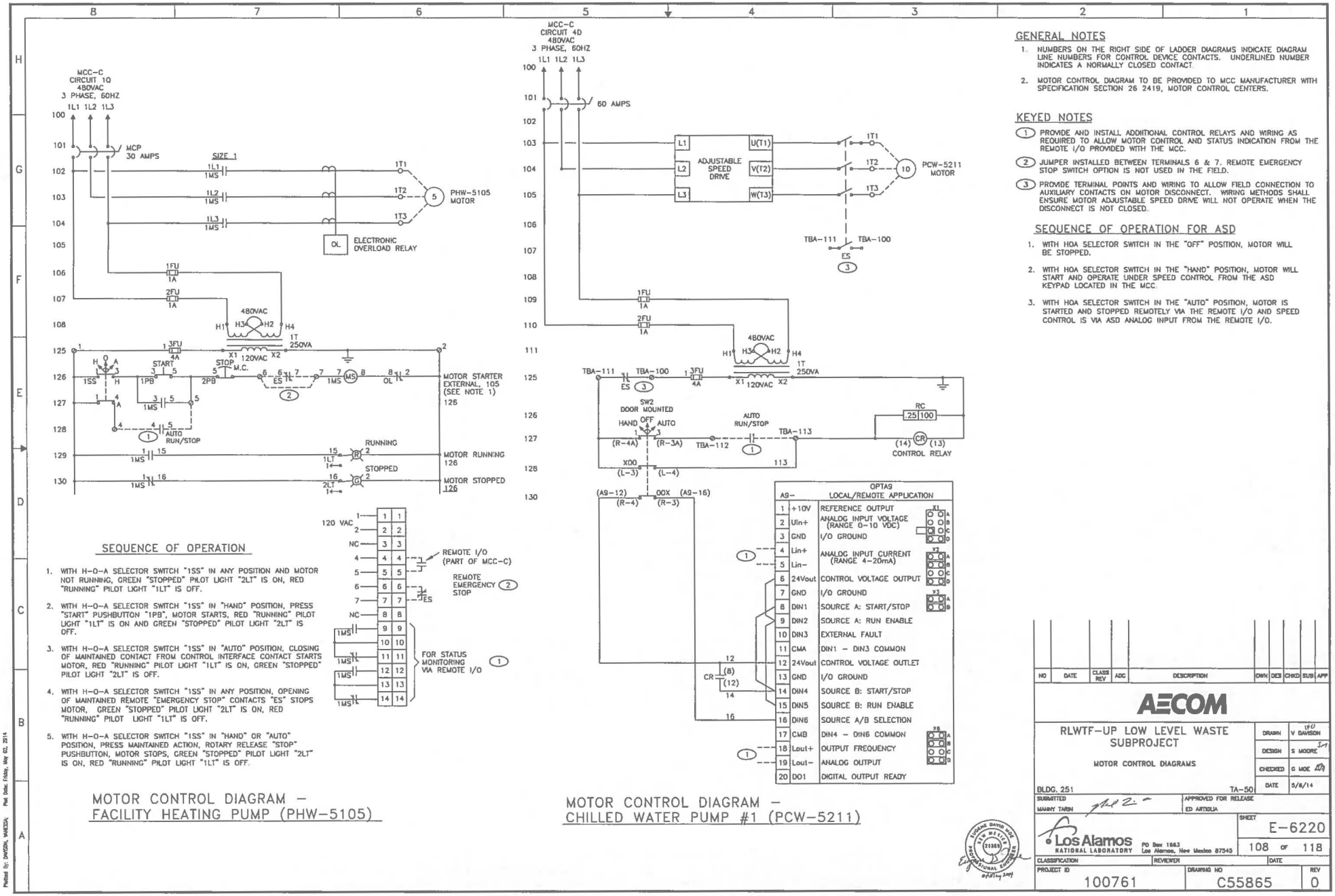

SEQUENCE OF OPERATION

1. WITH H-O-A SELECTOR SWITCH "1SS" IN ANY POSITION AND MOTOR NOT RUNNING, GREEN "STOPPED" PILOT LIGHT "2LT" IS ON, RED "RUNNING" PILOT LIGHT "1LT" IS OFF.
2. WITH H-O-A SELECTOR SWITCH "1SS" IN "HAND" POSITION, PRESS "START" PUSHBUTTON "1PB", MOTOR STARTS, RED "RUNNING" PILOT LIGHT "1LT" IS ON AND GREEN "STOPPED" PILOT LIGHT "2LT" IS OFF.
3. WITH H-O-A SELECTOR SWITCH "1SS" IN "AUTO" POSITION, CLOSING OF MAINTAINED CONTACT FROM CONTROL INTERFACE CONTACT STARTS MOTOR, RED "RUNNING" PILOT LIGHT "1LT" IS ON, GREEN "STOPPED" PILOT LIGHT "2LT" IS OFF.
4. WITH H-O-A SELECTOR SWITCH "1SS" IN ANY POSITION, OPENING OF MAINTAINED REMOTE "EMERGENCY STOP" CONTACTS "ES" STOPS MOTOR, GREEN "STOPPED" PILOT LIGHT "2LT" IS ON, RED "RUNNING" PILOT LIGHT "1LT" IS OFF.
5. WITH H-O-A SELECTOR SWITCH "1SS" IN "HAND" OR "AUTO" POSITION, PRESS MAINTAINED ACTION, ROTARY RELEASE "STOP" PUSHBUTTON, MOTOR STOPS, GREEN "STOPPED" PILOT LIGHT "2LT" IS ON, RED "RUNNING" PILOT LIGHT "1LT" IS OFF.

MOTOR CONTROL DIAGRAM –
FACILITY HEATING PUMP (PHW-5105)

MOTOR CONTROL DIAGRAM –
CHILLED WATER PUMP #1 (PCW-5211)

GENERAL NOTES

1. NUMBERS ON THE RIGHT SIDE OF LADDER DIAGRAMS INDICATE DIAGRAM LINE NUMBERS FOR CONTROL DEVICE CONTACTS. UNDERLINED NUMBER INDICATES A NORMALLY CLOSED CONTACT.
2. MOTOR CONTROL DIAGRAM TO BE PROVIDED TO MCC MANUFACTURER WITH SPECIFICATION SECTION 26 2419, MOTOR CONTROL CENTERS.

KEYED NOTES

(1) PROVIDE AND INSTALL ADDITIONAL CONTROL RELAYS AND WIRING AS REQUIRED TO ALLOW MOTOR CONTROL AND STATUS INDICATION FROM THE REMOTE I/O PROVIDED WITH THE MCC.

(2) JUMPER INSTALLED BETWEEN TERMINALS 6 & 7. REMOTE EMERGENCY STOP SWITCH OPTION IS NOT USED IN THE FIELD.

(3) PROVIDE TERMINAL POINTS AND WIRING TO ALLOW FIELD CONNECTION TO AUXILIARY CONTACTS ON MOTOR DISCONNECT. WIRING METHODS SHALL ENSURE MOTOR ADJUSTABLE SPEED DRIVE WILL NOT OPERATE WHEN THE DISCONNECT IS NOT CLOSED.

SEQUENCE OF OPERATION FOR ASD

1. WITH HOA SELECTOR SWITCH IN THE "OFF" POSITION, MOTOR WILL BE STOPPED.
2. WITH HOA SELECTOR SWITCH IN THE "HAND" POSITION, MOTOR WILL START AND OPERATE UNDER SPEED CONTROL FROM THE ASD KEYPAD LOCATED IN THE MCC.
3. WITH HOA SELECTOR SWITCH IN THE "AUTO" POSITION, MOTOR IS STARTED AND STOPPED REMOTELY VIA THE REMOTE I/O AND SPEED CONTROL IS VIA ASD ANALOG INPUT FROM THE REMOTE I/O.

NO	DATE	CLASS REV	ADC	DESCRIPTION	DWN	DES	CHKD	SUB	APP

AECOM

RLWTF-UP LOW LEVEL WASTE SUBPROJECT

MOTOR CONTROL DIAGRAMS

DRAWN	V DAWSON
DESIGN	S MOORE
CHECKED	G MOE
DATE	5/8/14

BLDG. 251 TA-50

SUBMITTED MANNY TARIN — APPROVED FOR RELEASE ED ARTIOLA

Los Alamos NATIONAL LABORATORY PO Box 1663 Los Alamos, New Mexico 87545

SHEET E-6220

108 OF 118

CLASSIFICATION | REVIEWER | DATE

PROJECT ID 100761 | DRAWING NO C55865 | REV 0

C55871

File Location: P:\RLWTF LOW-LEVEL WASTE FACILITY\300 CAD\C55865 CUR\SHEETS\18 ELECTRICAL\55865-E-6220-R0.DWG
Plotted By: DAWSON, WARREN Plot Date: Friday, May 02, 2014

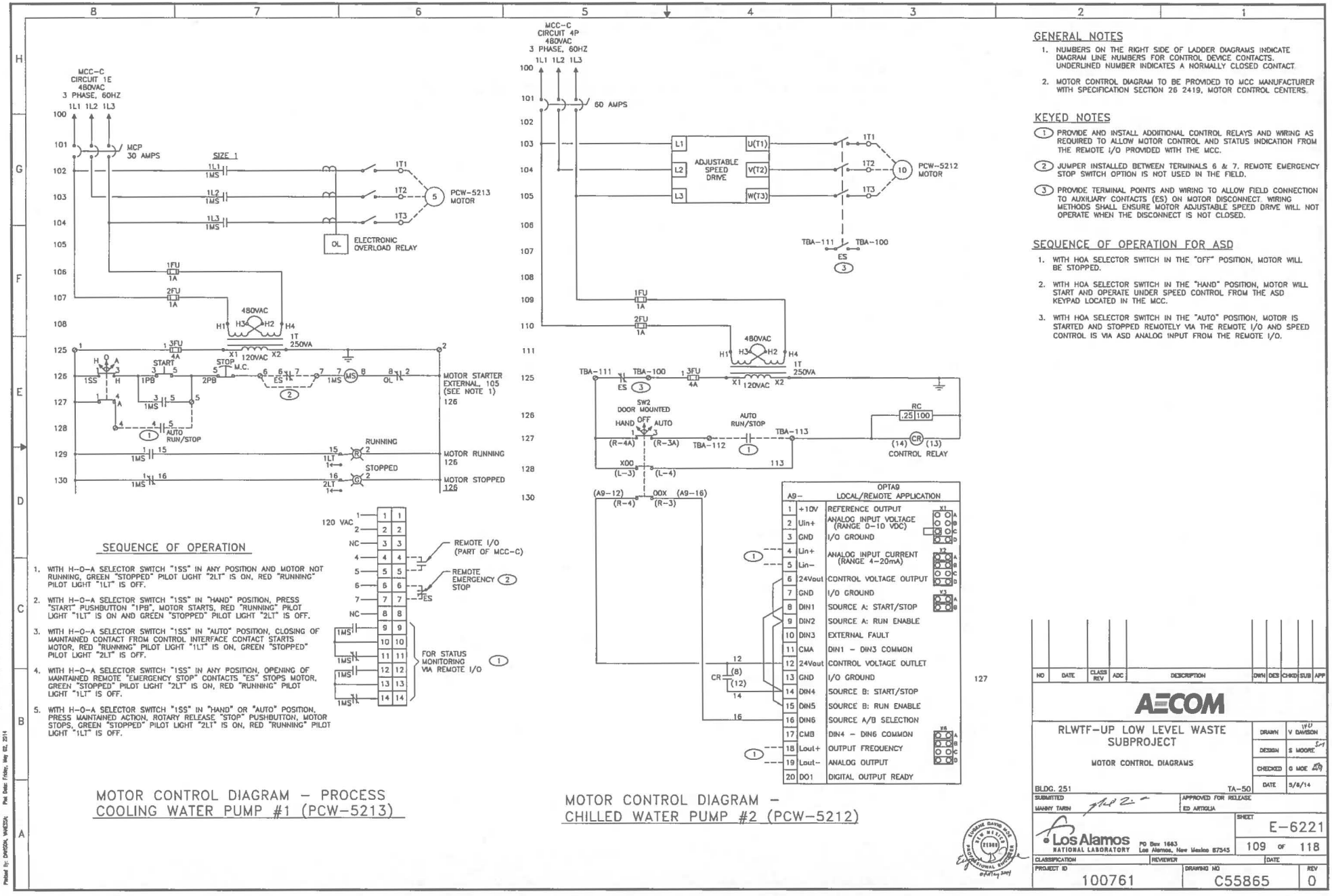

SEQUENCE OF OPERATION

1. WITH H-O-A SELECTOR SWITCH "1SS" IN ANY POSITION AND MOTOR NOT RUNNING, GREEN "STOPPED" PILOT LIGHT "2LT" IS ON, RED "RUNNING" PILOT LIGHT "1LT" IS OFF.
2. WITH H-O-A SELECTOR SWITCH "1SS" IN "HAND" POSITION, PRESS "START" PUSHBUTTON "1PB", MOTOR STARTS, RED "RUNNING" PILOT LIGHT "1LT" IS ON AND GREEN "STOPPED" PILOT LIGHT "2LT" IS OFF.
3. WITH H-O-A SELECTOR SWITCH "1SS" IN "AUTO" POSITION, CLOSING OF MAINTAINED CONTACT FROM CONTROL INTERFACE CONTACT STARTS MOTOR, RED "RUNNING" PILOT LIGHT "1LT" IS ON, GREEN "STOPPED" PILOT LIGHT "2LT" IS OFF.
4. WITH H-O-A SELECTOR SWITCH "1SS" IN ANY POSITION, OPENING OF MAINTAINED REMOTE "EMERGENCY STOP" CONTACTS "ES" STOPS MOTOR, GREEN "STOPPED" PILOT LIGHT "2LT" IS ON, RED "RUNNING" PILOT LIGHT "1LT" IS OFF.
5. WITH H-O-A SELECTOR SWITCH "1SS" IN "HAND" OR "AUTO" POSITION, PRESS MAINTAINED ACTION, ROTARY RELEASE "STOP" PUSHBUTTON, MOTOR STOPS, GREEN "STOPPED" PILOT LIGHT "2LT" IS ON, RED "RUNNING" PILOT LIGHT "1LT" IS OFF.

GENERAL NOTES

1. NUMBERS ON THE RIGHT SIDE OF LADDER DIAGRAMS INDICATE DIAGRAM LINE NUMBERS FOR CONTROL DEVICE CONTACTS. UNDERLINED NUMBER INDICATES A NORMALLY CLOSED CONTACT.
2. MOTOR CONTROL DIAGRAM TO BE PROVIDED TO MCC MANUFACTURER WITH SPECIFICATION SECTION 26 2419, MOTOR CONTROL CENTERS.

KEYED NOTES

(1) PROVIDE AND INSTALL ADDITIONAL CONTROL RELAYS AND WIRING AS REQUIRED TO ALLOW MOTOR CONTROL AND STATUS INDICATION FROM THE REMOTE I/O PROVIDED WITH THE MCC.

(2) JUMPER INSTALLED BETWEEN TERMINALS 6 & 7. REMOTE EMERGENCY STOP SWITCH OPTION IS NOT USED IN THE FIELD.

(3) PROVIDE TERMINAL POINTS AND WIRING TO ALLOW FIELD CONNECTION TO AUXILIARY CONTACTS (ES) ON MOTOR DISCONNECT. WIRING METHODS SHALL ENSURE MOTOR ADJUSTABLE SPEED DRIVE WILL NOT OPERATE WHEN THE DISCONNECT IS NOT CLOSED.

SEQUENCE OF OPERATION FOR ASD

1. WITH HOA SELECTOR SWITCH IN THE "OFF" POSITION, MOTOR WILL BE STOPPED.
2. WITH HOA SELECTOR SWITCH IN THE "HAND" POSITION, MOTOR WILL START AND OPERATE UNDER SPEED CONTROL FROM THE ASD KEYPAD LOCATED IN THE MCC.
3. WITH HOA SELECTOR SWITCH IN THE "AUTO" POSITION, MOTOR IS STARTED AND STOPPED REMOTELY VIA THE REMOTE I/O AND SPEED CONTROL IS VIA ASD ANALOG INPUT FROM THE REMOTE I/O.

MOTOR CONTROL DIAGRAM – PROCESS COOLING WATER PUMP #1 (PCW-5213)

MOTOR CONTROL DIAGRAM – CHILLED WATER PUMP #2 (PCW-5212)

NO	DATE	CLASS REV	ADC	DESCRIPTION	DWN	DES	CHKD	SUB	APP

AECOM

RLWTF-UP LOW LEVEL WASTE SUBPROJECT

MOTOR CONTROL DIAGRAMS

DRAWN V DAVISON
DESIGN S MOORE
CHECKED G MOE
DATE 5/8/14

BLDG. 251 TA-50

SUBMITTED MANNY TARIN
APPROVED FOR RELEASE ED ARTIAGA

Los Alamos NATIONAL LABORATORY PO Box 1663 Los Alamos, New Mexico 87545

SHEET E-6221
109 OF 118

CLASSIFICATION REVIEWER DATE

PROJECT ID 100761
DRAWING NO C55865
REV 0

i16521 :
File Location: P:\RLWTF LOW-LEVEL WASTE FACILITY\500 CAD\C55865 CAD\SHEETS\16 ELECTRICAL\55865-E-6221-R0.DWG
Plotted By: DAVIDA WIESER Plot Date: Friday, May 02, 2014

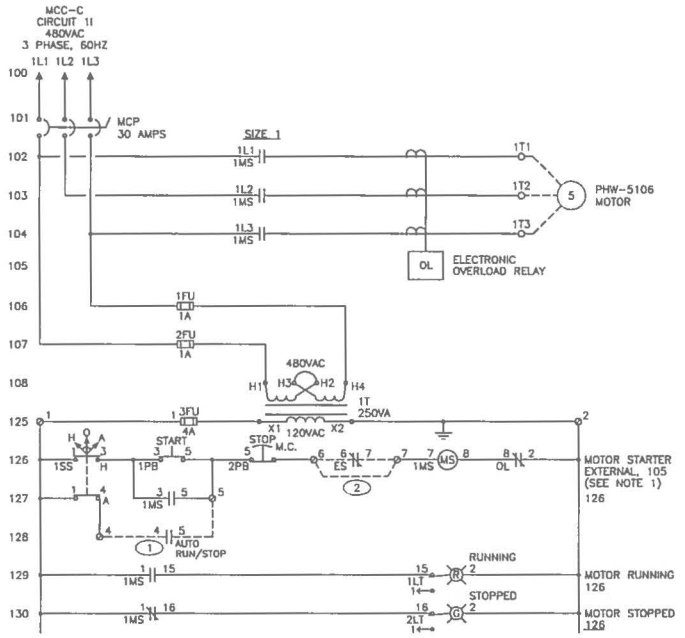

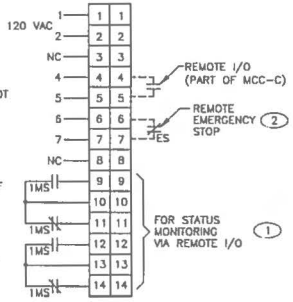

SEQUENCE OF OPERATION

1. WITH H-O-A SELECTOR SWITCH "1SS" IN ANY POSITION AND MOTOR NOT RUNNING, GREEN "STOPPED" PILOT LIGHT "2LT" IS ON, RED "RUNNING" PILOT LIGHT "1LT" IS OFF.
2. WITH H-O-A SELECTOR SWITCH "1SS" IN "HAND" POSITION, PRESS "START" PUSHBUTTON "1PB", MOTOR STARTS, RED "RUNNING" PILOT LIGHT "1LT" IS ON AND GREEN "STOPPED" PILOT LIGHT "2LT" IS OFF.
3. WITH H-O-A SELECTOR SWITCH "1SS" IN "AUTO" POSITION, CLOSING OF MAINTAINED CONTACT FROM CONTROL INTERFACE CONTACT STARTS MOTOR, RED "RUNNING" PILOT LIGHT "1LT" IS ON, GREEN "STOPPED" PILOT LIGHT "2LT" IS OFF.
4. WITH H-O-A SELECTOR SWITCH "1SS" IN ANY POSITION, OPENING OF MAINTAINED REMOTE "EMERGENCY STOP" CONTACTS "ES" STOPS MOTOR, GREEN "STOPPED" PILOT LIGHT "2LT" IS ON, RED "RUNNING" PILOT LIGHT "1LT" IS OFF.
5. WITH H-O-A SELECTOR SWITCH "1SS" IN "HAND" OR "AUTO" POSITION, PRESS MAINTAINED ACTION, ROTARY RELEASE "STOP" PUSHBUTTON, MOTOR STOPS, GREEN "STOPPED" PILOT LIGHT "2LT" IS ON, RED "RUNNING" PILOT LIGHT "1LT" IS OFF.

MOTOR CONTROL DIAGRAM – FACILITY HEATING PUMP (PHW-5106)

1 / E-6212 SCALE: NONE

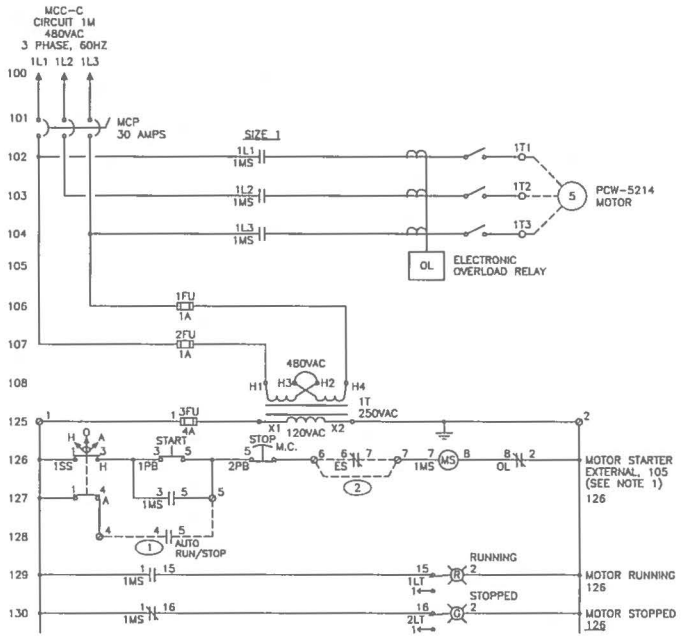

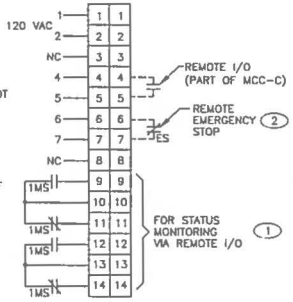

SEQUENCE OF OPERATION

1. WITH H-O-A SELECTOR SWITCH "1SS" IN ANY POSITION AND MOTOR NOT RUNNING, GREEN "STOPPED" PILOT LIGHT "2LT" IS ON, RED "RUNNING" PILOT LIGHT "1LT" IS OFF.
2. WITH H-O-A SELECTOR SWITCH "1SS" IN "HAND" POSITION, PRESS "START" PUSHBUTTON "1PB", MOTOR STARTS, RED "RUNNING" PILOT LIGHT "1LT" IS ON AND GREEN "STOPPED" PILOT LIGHT "2LT" IS OFF.
3. WITH H-O-A SELECTOR SWITCH "1SS" IN "AUTO" POSITION, CLOSING OF MAINTAINED CONTACT FROM CONTROL INTERFACE CONTACT STARTS MOTOR, RED "RUNNING" PILOT LIGHT "1LT" IS ON, GREEN "STOPPED" PILOT LIGHT "2LT" IS OFF.
4. WITH H-O-A SELECTOR SWITCH "1SS" IN ANY POSITION, OPENING OF MAINTAINED REMOTE "EMERGENCY STOP" CONTACTS "ES" STOPS MOTOR, GREEN "STOPPED" PILOT LIGHT "2LT" IS ON, RED "RUNNING" PILOT LIGHT "1LT" IS OFF.
5. WITH H-O-A SELECTOR SWITCH "1SS" IN "HAND" OR "AUTO" POSITION, PRESS MAINTAINED ACTION, ROTARY RELEASE "STOP" PUSHBUTTON, MOTOR STOPS, GREEN "STOPPED" PILOT LIGHT "2LT" IS ON, RED "RUNNING" PILOT LIGHT "1LT" IS OFF.

MOTOR CONTROL DIAGRAM – PROCESS COOLING WATER PUMP #2 (PCW-5214)

2 / E-6212 SCALE: NONE

GENERAL NOTES

1. NUMBERS ON THE RIGHT SIDE OF LADDER DIAGRAMS INDICATE DIAGRAM LINE NUMBERS FOR CONTROL DEVICE CONTACTS. UNDERLINED NUMBER INDICATES A NORMALLY CLOSED CONTACT.
2. MOTOR CONTROL DIAGRAM TO BE PROVIDED TO MCC MANUFACTURER WITH SPECIFICATION SECTION 26 2419, MOTOR CONTROL CENTERS.

KEYED NOTES

(1) PROVIDE AND INSTALL ADDITIONAL CONTROL RELAYS AND WIRING AS REQUIRED TO ALLOW MOTOR CONTROL AND STATUS INDICATION FROM THE REMOTE I/O PROVIDED WITH THE MCC.

(2) JUMPER INSTALLED BETWEEN TERMINALS 6 & 7. REMOTE EMERGENCY STOP SWITCH OPTION IS NOT USED IN THE FIELD.

NO	DATE	CLASS REV	ADC	DESCRIPTION	DWN	DES	CHKD	SUB	APP

AECOM

RLWTF-UP LOW LEVEL WASTE SUBPROJECT

MOTOR CONTROL DIAGRAMS

DRAWN	V DAVISON
DESIGN	S MOORE
CHECKED	G MOE
DATE	5/8/14

BLDG. 251 TA-50

SUBMITTED MANNY TARIN — APPROVED FOR RELEASE ED ARTIGLIA

Los Alamos NATIONAL LABORATORY — PO Box 1663 Los Alamos, New Mexico 87545

SHEET E-6222

110 OF 118

CLASSIFICATION — REVIEWER — DATE

PROJECT ID 100761 — DRAWING NO C55865 — REV 0

EUGENE DAVID MOE 21989 NEW MEXICO PROFESSIONAL ENGINEER

55621 :
File Location: P:\RLWTF LOW-LEVEL WASTE FACILITY\500 CAD\C55865 CUR\SHEETS\16 ELECTRICAL\55865-E-6222-R0.DWG
Plotted By: DAVISON, VANESSA; Plot Date: Friday, May 02, 2014

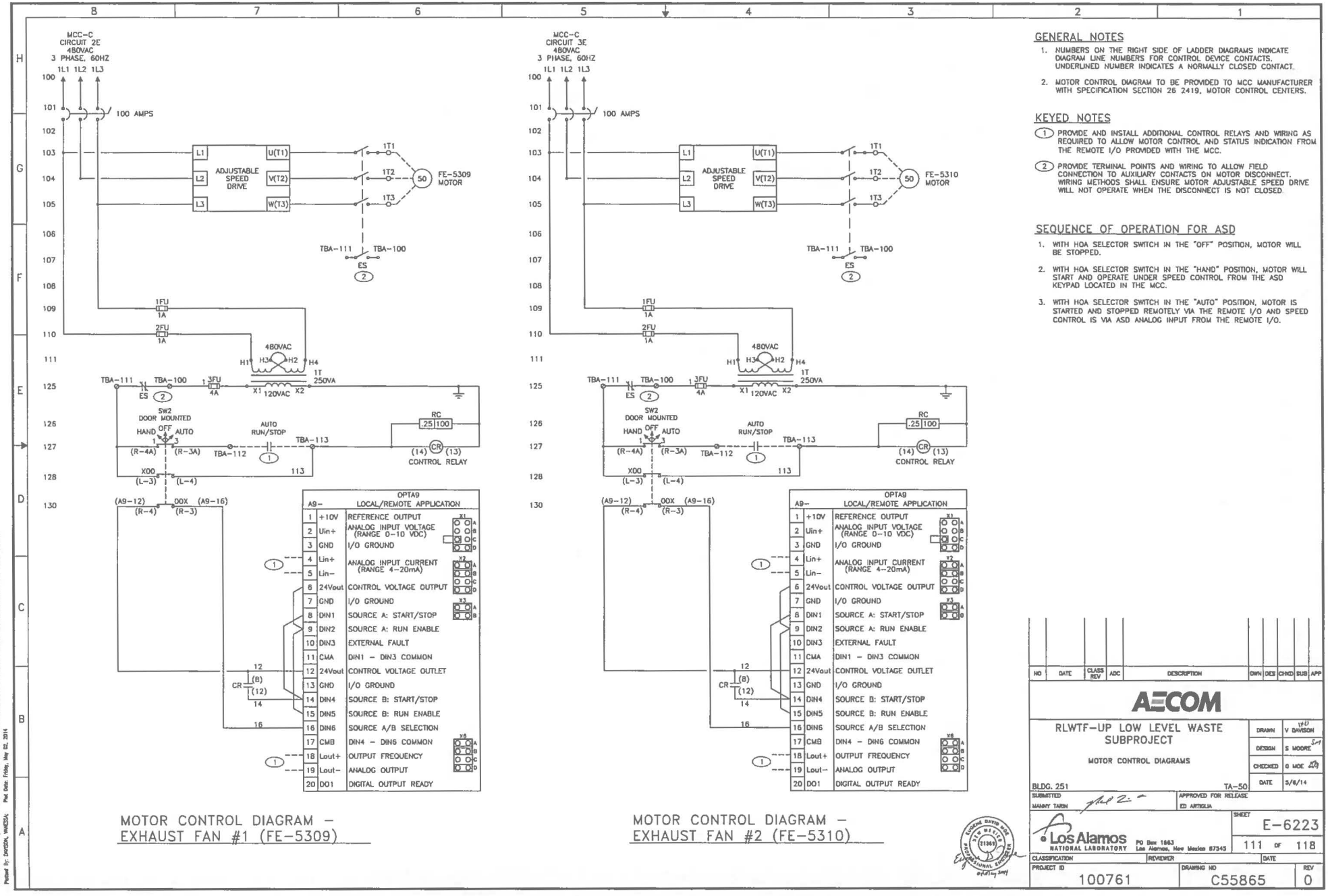

GENERAL NOTES

1. NUMBERS ON THE RIGHT SIDE OF LADDER DIAGRAMS INDICATE DIAGRAM LINE NUMBERS FOR CONTROL DEVICE CONTACTS. UNDERLINED NUMBER INDICATES A NORMALLY CLOSED CONTACT.
2. MOTOR CONTROL DIAGRAM TO BE PROVIDED TO MCC MANUFACTURER WITH SPECIFICATION SECTION 26 2419, MOTOR CONTROL CENTERS.

KEYED NOTES

(1) PROVIDE AND INSTALL ADDITIONAL CONTROL RELAYS AND WIRING AS REQUIRED TO ALLOW MOTOR CONTROL AND STATUS INDICATION FROM THE REMOTE I/O PROVIDED WITH THE MCC.

(2) PROVIDE TERMINAL POINTS AND WIRING TO ALLOW FIELD CONNECTION TO AUXILIARY CONTACTS ON MOTOR DISCONNECT. WIRING METHODS SHALL ENSURE MOTOR ADJUSTABLE SPEED DRIVE WILL NOT OPERATE WHEN THE DISCONNECT IS NOT CLOSED.

SEQUENCE OF OPERATION FOR ASD

1. WITH HOA SELECTOR SWITCH IN THE "OFF" POSITION, MOTOR WILL BE STOPPED.
2. WITH HOA SELECTOR SWITCH IN THE "HAND" POSITION, MOTOR WILL START AND OPERATE UNDER SPEED CONTROL FROM THE ASD KEYPAD LOCATED IN THE MCC.
3. WITH HOA SELECTOR SWITCH IN THE "AUTO" POSITION, MOTOR IS STARTED AND STOPPED REMOTELY VIA THE REMOTE I/O AND SPEED CONTROL IS VIA ASD ANALOG INPUT FROM THE REMOTE I/O.

NO	DATE	CLASS REV	ADC	DESCRIPTION	DWN	DES	CHKD	SUB	APP

AECOM

RLWTF-UP LOW LEVEL WASTE SUBPROJECT

MOTOR CONTROL DIAGRAMS

DRAWN V DAVISON
DESIGN S MOORE
CHECKED G MOE
DATE 5/8/14

BLDG. 251 TA-50

SUBMITTED MANNY TARIN
APPROVED FOR RELEASE ED ARTIGLIA

Los Alamos NATIONAL LABORATORY PO Box 1663 Los Alamos, New Mexico 87545

SHEET E-6223
111 OF 118

CLASSIFICATION REVIEWER DATE

PROJECT ID 100761
DRAWING NO C55865
REV 0

95521 : 12596

File Location: P:\RLWTF LOW-LEVEL WASTE FACILITY\500 CAD\C55865 CAD\SHEETS\16 ELECTRICAL\55865-E-6223-R0.DWG
Plotted By: DAVISON, VANESSA Plot Date: Friday, May 02, 2014

PANEL: LP-C
LOCATION: TA-50-251
FED FROM:

DC DEVICE TYPE: Breaker
DEVICE FAMILY: Bolt On

ENCLOSURE: NEMA 1
MOUNTING: Surface
VOLTAGE: 480/277

MAINS(A): MLO
WIRING: 3-Phase 4-Wire

CONTINUOUS(A): 100
BUS SC RATING(A) 22000
FAULT CURRENT(A): 11131

	DC AMPS P	NOTES	DESCRIPTION	DEMAND CODE	VA	CKT	PHASE LOADS VA A	B	C	CKT	VA	DEMAND CODE	DESCRIPTION	NOTES	DC AMPS P
	20 1		INT, EXIT	LTS	1440	1	1840			2	400	LTS	STREET, YARD	VIA LC-C	20 1
	20 1	VIA LC-C	EXT	LTS	45	3		445		4	400	LTS	STREET, YARD	VIA LC-C	20 1
	20 1		INT	LTS	668	5			668	6	0	SPARE	SPARE		20 1
	20 3		HTR HVA-5324	GEN	1027	7	1027			8	0	SPARE	SPARE		20 1
	" "		" "		1027	9		1027		10	0	SPARE	SPARE		20 1
	" "		" "		1027	11			1027	12	0	SPARE	SPARE		20 1
(1)	70 3		CA-5401/5402	GEN	12145	13	12145			14	0	SPARE	SPARE		20 1
	" "		" "		12145	15		12145		16	0	SPARE	SPARE		20 1
	" "		" "		12145	17			12145	18					
						19				20					
						21				22					
						23				24					
						25				26					
						27				28					
						29				30					
						31				32					
						33				34					
						35				36					
						37				38					
						39				40					
						41				42					

ALL CONNECTED	KVA	MAX PH AMPS	* PHASE TOTALS	VA	AMPS	BUS TOTALS	KVA
TOTAL CONNECTED	42.45	54.1	* A-N	15004.4	54.1	CONNECTED	42.45
TOTAL DEMAND	42.45	54.1	* B-N	13609.5	49.1	DEMAND	42.45
TOTAL DESIGN	47.74	61.3	* C-N	13832.5	49.9	DESIGN	47.74

PANEL: PP-4
LOCATION: TA-50-251
FED FROM: XFMR 4 SEC

DC DEVICE TYPE: Breaker
DEVICE FAMILY: Bolt On

ENCLOSURE: NEMA 1
MOUNTING: Surface
VOLTAGE: 208/120

MAINS(A): BKR
WIRING: 3-Phase 4-Wire

CONTINUOUS(A): 175
BUS SC RATING(A) 10000
FAULT CURRENT(A): 3210

DC AMPS P	NOTES	DESCRIPTION	DEMAND CODE	VA	CKT	PHASE LOADS VA A	B	C	CKT	VA	DEMAND CODE	DESCRIPTION	NOTES	DC AMPS P
20 1		MOV-5810, AT-5810	GEN	110	1	951			2	841	GEN	HVG-5604		20 1
20 1		PIH-5605	HEATING	92	3		1293		4	1201	GEN	ASE-5330		20 1
20 1		BHV-5101	HEATING	400	5			800	6	400	HEATING	BHV-5102		20 1
20 1		PHV-5110	HEATING	528	7	1057			8	528	HEATING	PHV-5111		20 1
20 1		CAB-103	GEN	1160	9		2176		10	1016	GEN	WORKSTATION	QUAD REC	20 1
20 1		S, E WALL, EXT	REC	540	11			725	12	200	GEN	BAS-2		20 1
0 1		SPARE	SPARE	0	13	360			14	360	REC	TELECOM, W WALL	QUAD REC	20 1
20 1	FE-5309, 5310	PJB-12	GEN	120	15		819		16	720	REC	W, N WALL, EXT		20 1
50 3	HEAT TRACE	HTC-1503	HEATING	3500	17			3581	18	100	GEN	PJB-10		20 1
" "		" "		3500	19	3500			20	0	SPARE	SPARE		20 1
" "		" "		3500	21		3581		22	100	GEN	PJB-11	CHILLER MOVS	20 1
20 1		DRUM STORAGE	REC	360	23			360	24	0	SPARE	SPARE		20 1
20 1		SPARE	SPARE	0	25	0			26	0	SPARE	SPARE		20 1
					27				28					
					29				30					
					31				32					
					33				34					
					35				36					
					37				38					
					39				40					
					41				42					

ALL CONNECTED	KVA	MAX PH AMPS	* PHASE TOTALS	VA	AMPS	BUS TOTALS	KVA
TOTAL CONNECTED	18.53	63.4	* A-N	5597.1	46.6	CONNECTED	18.53
TOTAL DEMAND	18.53	63.4	* B-N	7618.3	63.4	DEMAND	18.53
TOTAL DESIGN	21.54	70.7	* C-N	5337.0	44.4	DESIGN	21.54

GENERAL NOTES

1. PORTIONS OF THIS DRAWING WERE PREPARED FROM THE OUTPUT OF ELECTRICAL SYSTEM ANALYSIS SOFTWARE AND DO NOT CONFORM TO LANL DRAFTING STANDARDS.
2. PROVIDE GFEP CIRCUIT BREAKERS AS INDICATED ON THE PANEL SCHEDULES.
3. SEE SHEET E-7203 FOR CONDUIT AND WIRE SIZES.

KEYED NOTES

(1) DISCONNECT AND MOTOR CONTROLLER ARE PROVIDED WITH EQUIPMENT.

NO	DATE	CLASS REV	ADC	DESCRIPTION	DWN	DES	CHKD	SUB	APP

AECOM

RLWTF-UP LOW LEVEL WASTE SUBPROJECT

PANEL SCHEDULES

DRAWN: V DAVISON
DESIGN: S MOORE
CHECKED: G MOE
DATE: 5/8/14

BLDG. 251 TA-50

SUBMITTED: MANNY TARIN
APPROVED FOR RELEASE: ED ARTIOLIA

Los Alamos NATIONAL LABORATORY
PO Box 1663 Los Alamos, New Mexico 87545

SHEET: E-7200
112 OF 118

CLASSIFICATION | REVIEWER | DATE

PROJECT ID: 100761
DRAWING NO: C55865
REV: 0

25527 :

File Location: P:\RLWTF LOW-LEVEL WASTE FACILITY\500 CAD\C55865 CUR\SHEETS\18 ELECTRICAL\55865-E-7200-R0.DWG
Plotted By: DAVISON, VANESSA; Plot Date: Friday, May 02, 2014

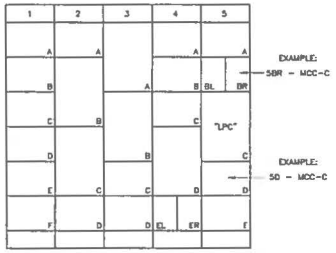

CIRCUIT DESIGNATIONS: MOTOR CONTROL CENTER (8)
SCALE: NONE

1. CIRCUIT NUMBERS FOR CIRCUITS EMANATING FROM THIS EQUIPMENT WILL UTILIZE THE HORIZONTAL AND VERTICAL LOCATORS OF THE CUBICLE FROM WHICH THE CIRCUIT IS FED.
2. WHEN THIS EQUIPMENT HAS A PANELBOARD INSTALLED WITHIN IT, THE PANELBOARD WILL BE CODED SEPARATELY. EXAMPLE: COMPARTMENT 5C IS PANELBOARD "LPC". IT IS CODED 3–34LPC. CIRCUIT FEEDING LPC IS 5BL–MCC–C.

*USE L AND R TO DESIGNATE LEFT SIDE AND RIGHT SIDE CIRCUIT BREAKER WHEN TWO CIRCUIT BREAKERS ARE INSTALLED IN THE SAME CUBICLE.

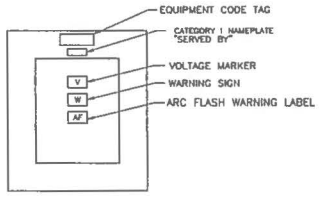

ELECTRICAL IDENTIFICATION: PANELBOARD
SCALE: NONE

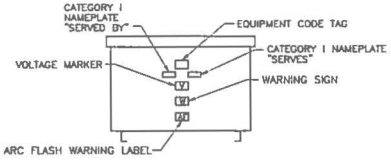

ELECTRICAL IDENTIFICATION: TRANSFORMER
SCALE: NONE

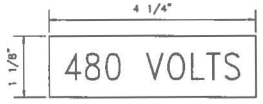

ELECTROMARK OR EQUAL

VOLTAGE MARKER
SCALE: NONE

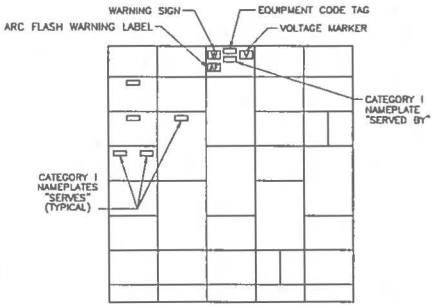

ELECTRICAL IDENTIFICATION: MOTOR CONTROL CENTER (8)
SCALE: NONE

1. ONLY COMPARTMENTS SERVING EQUIPMENT WILL HAVE CATEGORY I NAMEPLATES. SPARE UNITS AND SPACES DO NOT REQUIRE ANY NAMEPLATES.
2. MAIN WILL HAVE A CATEGORY I NAMEPLATE INSTALLED AND MAY HAVE A CATEGORY II NAMEPLATE INSTALLED.

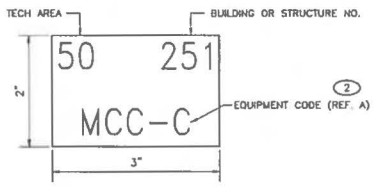

LETTERING SIZE = 48 PT.

EQUIPMENT CODE TAG
SCALE: NONE

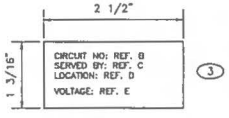

"SERVED BY"

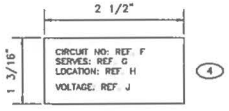

"SERVES"

LETTERING SIZE = 10 PT.

CATEGORY I NAMEPLATES
SCALE: NONE

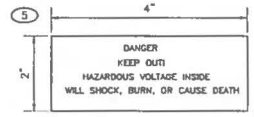

(1) ELECTROMARK OR EQUAL

WARNING SIGN
SCALE: NONE

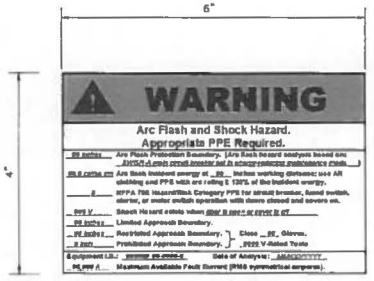

480V ARC FLASH WARNING LABEL (6)
SCALE: NONE

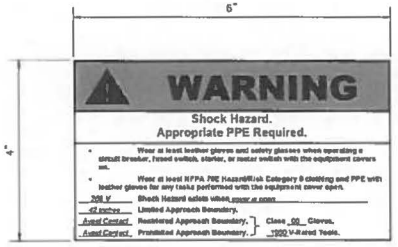

STANDARD ARC FLASH WARNING LABEL (7)
SCALE: NONE

GENERAL NOTES

1. PORTIONS OF THIS DRAWING WERE IMPORTED FROM LANL STANDARD ST–D5000–3 AND DO NOT COMPLETELY CONFORM TO LANL DRAFTING STANDARDS.

KEYED NOTES

(1) SIGN SHALL CONFORM TO ANSI Z535.4 AND OSHA DANGER AND CAUTION SPECIFICATIONS.

(2) REFER TO EQUIPMENT CODE TAG INFORMATION ON SHEET E–7202 FOR REFERENCE DATA.

(3) REFER TO CATEGORY I NAMEPLATE "SERVED BY" INFORMATION ON SHEET E–7202 FOR REFERENCE DATA.

(4) REFER TO CATEGORY I NAMEPLATE "SERVES" INFORMATION ON SHEET E–7202 FOR REFERENCE DATA.

(5) DIMENSIONS SHOWN ARE MINIMUM DIMENSIONS.

(6) PROVIDE ARC FLASH LABELS WITH DIMENSIONS AND FORMAT AS SHOWN. SEE SPECIFICATION SECTION 26 0553 FOR A COMPLETE LIST OF SPECIFIC ARC FLASH LABELS BY EQUIPMENT ID.

(7) PROVIDE STANDARD ARC FLASH LABEL FOR ALL EQUIPMENT OPERATING AT 240V OR LESS.

(8) GENERIC MOTOR CONTROL CENTER FRONT ARRANGEMENT IS FOR ILLUSTRATIVE PURPOSES ONLY.

NO	DATE	CLASS REV	ADC	DESCRIPTION	DWN	DES	CHKD	SUB	APP

AECOM

RLWTF–UP LOW LEVEL WASTE SUBPROJECT

EQUIMENT NAMEPLATE SCHEDULES

DRAWN: V DAVISON
DESIGN: S MOORE
CHECKED: G MOE
DATE: 5/8/14

BLDG. 251 TA–50

SUBMITTED: MANNY TARIN
APPROVED FOR RELEASE: ED ARTIGLIA

Los Alamos NATIONAL LABORATORY
PO Box 1663 Los Alamos, New Mexico 87545

SHEET: E–7201
113 OF 118

CLASSIFICATION | REVIEWER | DATE

PROJECT ID: 100761
DRAWING NO.: C55865
REV: 0

85271

File Location: P:\RLWTF LOW-LEVEL WASTE FACILITY\500 CAD\C55865 CUR\SHEETS\18 ELECTRICAL\55865-E-7201-R0.DWG
Plotted By: DAVISON, VANESSA; Plot Date: Friday, May 02, 2014

EQUIPMENT CODE TAG INFORMATION		CATEGORY 1 NAMEPLATE "SERVED BY" INFORMATION				CATEGORY 1 NAMEPLATE "SERVES" INFORMATION			
EQUIPMENT DESCRIPTION	EQUIPMENT CODE "REF A"	CIRCUIT NO: "REF B"	SERVED BY: "REF C"	LOCATION: "REF D"	VOLTAGE: "REF E"	CIRCUIT NO: "REF F"	SERVES: "REF G"	LOCATION: "REF H"	VOLTAGE: "REF J"
500KVA PAD MOUNTED TRANSFORMER	XFMR-B	SECONDARY	UTILITY SWITCH	OUTSIDE BLDG 251	13.2KV	SECONDARY	PP-C	BLDG 251	480V
600A MAIN BREAKER POWER PANEL	PP-C	SECONDARY	XFMR-B	OUTSIDE BLDG 251	480V	6	XFMR-4	BLDG 251	480V
						5	CWR-5201	OUTSIDE BLDG 251	480V
						10	CWR-5202	OUTSIDE BLDG 251	480V
						12	CWR-5203	OUTSIDE BLDG 251	480V
						8	LP-C	BLDG 251	480V
						14	MCC-C	BLDG 251	480V
45 KVA TRANSFORMER	XFMR-4	6	PP-C	BLDG 251	480V	SECONDARY	PP-4	BLDG 251	208V
175 MAIN BREAKER POWER PANEL	PP-4	SECONDARY	XFMR-4	BLDG 251	480V				
CHILLED WATER SYSTEM #1	CWR-5201	5	PP-C	BLDG 251	480V				
CHILLED WATER SYSTEM #2	CWR-5202	10	PP-C	BLDG 251	480V				
CHILLED WATER SYSTEM #3	CWR-5203	12	PP-C	BLDG 251	480V				
AIR HANDLING UNIT	HVA-5324	7,9,11	LP-C	BLDG 251	480V				
AIR COMPRESSOR	CA-5401/5402	13,15,17	LP-C	BLDG 251	480V				
100A MAIN LUG LIGHTING PANEL	LP-C	8	PP-C	BLDG 251	480V				
MOTOR CONTROL CENTER MCC-C	MCC-C	14	PP-C	BLDG 251	480V	1Q	PHW-5105	BLDG 251	480V
						1E	DS-5213	BLDG 251	480V
						11	PHW-5106	BLDG 251	480V
						1M	DS-5214	BLDG 251	480V
						4D	DS-5211	BLDG 251	480V
						4P	DS-5212	BLDG 251	480V
						2E	DS-5309	OUTSIDE BY FE-5309	480V
						3E	DS-5310	OUTSIDE BY FE-5309	480V
FACILITY HEATING PUMP	PHW-5105	1Q	MCC-C	BLDG 251	480V				
DISCONNECT SWITCH	DS-5213	1E	MCC-C	BLDG 251	480V		PCW-5213	BLDG 251	480V
FACILITY HEATING PUMP	PHW-5106	11	MCC-C	BLDG 251	480V				
DISCONNECT SWITCH	DS-5214	1M	MCC-C	BLDG 251	208V		PCW-5214	BLDG 251	480V
DISCONNECT SWITCH	DS-5211	4D	MCC-C	BLDG 251	480V		PCW-5211	BLDG 251	480V
DISCONNECT SWITCH	DS-5212	4P	MCC-C	BLDG 251	480V		PCW-5212	BLDG 251	480V
DISCONNECT SWITCH	DS-5309	2E	MCC-C	BLDG 251	480V		FE-5309	OUTSIDE	480V
DISCONNECT SWITCH	DS-5310	3E	MCC-C	BLDG 251	480V		FE-5310	OUTSIDE	480V
HEAT TRACE CONTROLLER	HTC-1503	17,19,21	PP-4	BLDG 251	208V				
STACK SAMPLING ENCLOSURE	ASE-5330	4	PP-4	BLDG 251	120V				
FACILITY CONTROL SYSTEM	CAB-103	9	PP-4	BLDG 251	120V				
BUILDING AUTOMATION SYSTEM	BAS-2	12	PP-4	BLDG 251	120V				

NO	DATE	CLASS REV	ADC	DESCRIPTION	DWN	DES	CHKD	SUB	APP

AECOM

RLWTF-UP LOW LEVEL WASTE SUBPROJECT

EQUIPMENT NAMEPLATE

DRAWN: V DAVISON
DESIGN: S MOORE
CHECKED: G MOE
DATE: 5/8/14

BLDG. 251 TA-50

SUBMITTED: MANNY TARIN
APPROVED FOR RELEASE: ED ARTIGLIA

Los Alamos NATIONAL LABORATORY
PO Box 1663, Los Alamos, New Mexico 87545

SHEET: E-7202
114 OF 118

CLASSIFICATION | REVIEWER | DATE

PROJECT ID: 100761
DRAWING NO: C55865
REV: 0

File Location: P:\RLWTF LOW-LEVEL WASTE FACILITY\500 CAD\C55865 CAD\SHEETS\18 ELECTRICAL\55865-E-7202-R0.DWG
Plotted By: DAVISON, VANESSA Plot Date: Friday, May 02, 2014

66521

EQUIPMENT #	EQUIPMENT NAME	CONDUCTOR SIZE		CONDUCTOR TYPE	CONDUCTOR NUMBER	CIRCUIT LENGTH (ft)	SOURCE	CKT	CONDUIT SIZE	CONDUIT FILL CIRCUIT REF	DESTINATION	
XFMR-B	13.2KV - 480Y/277V, 500 KVA TRANSFORMER	3-#4/0	CU	MV105	XFMR-B	125	SWITCH MH50-109	NA	6"	A19	XFMR-B	
PP-C	POWER PANEL C	3-350 KCMIL	CU	600V XHHW-2	PP-C	65	XFMR-B	NA	3"	A16	PP-C	(2)
		1-#2/0 GND	CU	600V XHHW-2	PP-C							
		3-350 KCMIL	CU	600V XHHW-2	PP-C	65	XFMR-B	NA	3"	A16	PP-C	
		1-#2/0 GND	CU	600V XHHW-2	PP-C							
		3-350 KCMIL	CU	600V XHHW-2	PP-C	65	XFMR-B	NA	3"	A16	PP-C	
		1-#2/0 GND	CU	600V XHHW-2	PP-C							
XFMR-4	45KVA TRANSFORMER	3-#4	CU	600V THHN/THWN	PP-C-6	25	PP-C	6	1"	A9	XFMR-4	
		1-#8 GND	CU	600V THHN/THWN	PP-C-6							
CWR-5201	CHILLED WATER SYSTEM #1	3-#4/0	AL	600V XHHW-2	PP-C-5	90	PP-C	5	2"	A12	CWR-5201	
		1-#4 GND	CU	600V THHN/THWN	PP-C-5							
CWR-5202	CHILLED WATER SYSTEM #2	3-#4/0	AL	600V XHHW-2	PP-C-10	105	PP-C	10	2"	A12	CWR-5202	
		1-#4 GND	CU	600V THHN/THWN	PP-C-10							
CWR-5203	CHILLED WATER SYSTEM #3	3-#4/0	AL	600V XHHW-2	PP-C-12	125	PP-C	12	2"	A12	CWR-5203	
		1-#4 GND	CU	600V THHN/THWN	PP-C-12							
LP-C	LIGHTING PANEL C	4-#2	CU	600V THHN/THWN	PP-C-8	25	PP-C	8	1 1/2"	A11	LP-C	
		1-#8 GND	CU	600V THHN/THWN	PP-C-8							
MCC-C	MOTOR CONTROL CENTER C	3-300 KCMIL	AL	600V XHHW-2	PP-C-14	20	PP-C	14	3"	A14	MCC-C	
		1-#4 GND	CU	600V THHN/THWN	PP-C-14							
PP-4	POWER PANEL 4	4-#4/0	AL	600V XHHW-2	XFMR-4	10	XFMR-4	NA	2 1/2"	A13	PP-4	
		1-#4 GND	CU	600V THHN/THWN	XFMR-4							
PHW-5105	FACILITY HEATING PUMP	3-#12	CU	600V THHN/THWN	MCC-C-1Q	45	MCC-C	1A	3/4	A2	PHW-5105	
		1-#12 GND	CU	600V THHN/THWN	MCC-C-1Q							
PCW-5213	PROCESS COOLING WATER PUMP #1	3-#12	CU	600V THHN/THWN	MCC-C-1E	60	MCC-C	1E	3/4	A2	PCW-5213	
		1-#12 GND	CU	600V THHN/THWN	MCC-C-1E							
PHW-5106	FACILITY HEATING PUMP	3-#12	CU	600V THHN/THWN	MCC-C-1I	45	MCC-C	1I	3/4	A2	PHW-5106	
		1-#12 GND	CU	600V THHN/THWN	MCC-C-1I							
PCW-5214	PROCESS COOLING WATER PUMP #2	3-#12	CU	600V THHN/THWN	MCC-C-1M	60	MCC-C	1M	3/4	A2	PCW-5214	
		1-#12 GND	CU	600V THHN/THWN	MCC-C-1M							
PCW-5211	CHILLED WATER PUMP #1	3-#10	CU	600V THHN/THWN	MCC-C-4D	50	MCC-C	4D	3/4	A4	PCW-5211	
		1-#10 GND	CU	600V THHN/THWN	MCC-C-4D							
PCW-5212	CHILLED WATER PUMP #2	3-#10	CU	600V THHN/THWN	MCC-C-4P	50	MCC-C	4P	3/4	A4	PCW-5212	(4)
		1-#10 GND	CU	600V THHN/THWN	MCC-C-4P							
FE-5309	EXHAUST FAN #1	3-#4	CU	600V THHN/THWN	MCC-C-2E	115	MCC-C	2E	1	A9	FE-5309	
		1-#8 GND	CU	600V THHN/THWN	MCC-C-2E							
FE-5310	EXHAUST FAN #2	3-#4	CU	600V THHN/THWN	MCC-C-3E	130	MCC-C	3E	1	A9	FE-5310	(3)
		1-#8 GND	CU	600V THHN/THWN	MCC-C-3E							

CONDUIT AND WIRE SCHEDULE

EQUIPMENT #	CKT	CONDUCTOR SIZE		CONDUCTOR TYPE	CONDUCTOR NUMBER	CABLE LENGTH (FT)	SOURCE	CONDUIT SIZE	CONDUIT FILL CIRCUIT REF	DESTINATION	
LP-C	1	3-#12	CU	600V THHN/THWN	LP-C-1	15	LP-C	3/4	A1	INTERIOR AND EXIT LIGHTS	
	3	3-#12	CU	600V THHN/THWN	LP-C-3	35	LP-C	3/4	A1	EXTERIOR LIGHTS VIA LC-C	(1)
	5	3-#12	CU	600V THHN/THWN	LP-C-5	25	LP-C	3/4	A1	INTERIOR LIGHTS	
	7,9,11	3-#12	CU	600V THHN/THWN	LP-C-7,9,11	25	LP-C	3/4	A1	MTR HVA-5324	
	13,15,17	3-#4, 1#10 GND	CU	600V THHN/THWN	LP-C-13,15,17	30	LP-C	1	A7	CA-5401/5402	
	2	3-#12	CU	600V THHN/THWN	LP-C-2	45	LP-C	1	A1	STREET AND YARD LIGHTS VIA LC-C	(1)
	4	3-#12	CU	600V THHN/THWN	LP-C-4	45	LP-C	1	A1	STREET AND YARD LIGHTS VIA LC-C	(1)
PP-4	1	3-#12	CU	600V THHN/THWN	PP-4-1	30	PP-4	3/4	A1	MOV-5810, AT-5810	
	3	3-#12	CU	600V THHN/THWN	PP-4-3	45	PP-4	3/4	A1	PDH-5605	
	5	3-#12	CU	600V THHN/THWN	PP-4-5	25	PP-4	3/4	A1	BHW-5101	
	7	3-#12	CU	600V THHN/THWN	PP-4-7	35	PP-4	3/4	A1	PHW-5110	
	9	3-#10	CU	600V THHN/THWN	PP-4-9	10	PP-4	3/4	A3	CAB-103	
	11	3-#12	CU	600V THHN/THWN	PP-4-11	10	PP-4	3/4	A1	SOUTH AND EAST WALL AND EXTERIOR RECEPTACLES	
	13	3-#12	CU	600V THHN/THWN	PP-4-13	25	PP-4	3/4	A1	PS-5301	
	15	3-#12	CU	600V THHN/THWN	PP-4-15	90	PP-4	3/4	A1	PJB-12 (EX. FAN DAMPERS)	
	17,19,21	4-#6, 1#10 GND	CU	600V THHN/THWN	PP-4-17,19,21	85	PP-4	1	A8	HTC-1503	
	23	3-#12	CU	600V THHN/THWN	PP-4-23	150	PP-4	3/4	A1	DRUM STORAGE RECEPTACLES	
	2	3-#12	CU	600V THHN/THWN	PP-4-2	25	PP-4	3/4	A1	HWG-5604	
	4	3-#12	CU	600V THHN/THWN	PP-4-4	75	PP-4	3/4	A1	ASE 5330	
	6	3-#12	CU	600V THHN/THWN	PP-4-6	25	PP-4	3/4	A1	BHW-5102	
	8	3-#12	CU	600V THHN/THWN	PP-4-8	35	PP-4	3/4	A1	PHW-5111	
	10	3-#12	CU	600V THHN/THWN	PP-4-10	5	PP-4	3/4	A1	WORKSTATION RECEPTACLE	
	12	3-#12	CU	600V THHN/THWN	PP-4-12	35	PP-4	3/4	A1	BAS-2	
	14	3-#12	CU	600V THHN/THWN	PP-4-14	30	PP-4	3/4	A1	WEST WALL TELECOM RECEPTACLES	
	16	3-#12	CU	600V THHN/THWN	PP-4-16	25	PP-4	3/4	A1	WEST AND NORTH WALL RECEPTACLES	
	18	3-#12	CU	600V THHN/THWN	PP-4-12	35	PP-4	3/4	A1	PJB-10	
	20	3-#12	CU	600V THHN/THWN	PP-4-14	30	PP-4	3/4	A1	COMBUSTIBLE GAS DETECTOR	
	22	3-#12	CU	600V THHN/THWN	PP-4-16	25	PP-4	3/4	A1	PJB-11	

GENERAL NOTES

1. ALL LENGTHS ARE ESTIMATED TO THE FIRST DEVICE, SWITCH, RECEPTACLE, FIXTURE, ETC.
2. SEE SHEET S-7201 FOR WALL PENETRATION SCHEDULE.

KEYED NOTES

(1) EXTERIOR STREET AND YARD LIGHTS CIRCUITS 2, 3 AND 4 TO BE ROUTED IN 1" CONDUIT.

(2) SPARE CONDUIT NOT SHOWN.

(3) INSTALL 3/4" CONDUIT WITH (5) #12 AWG FOR RUN PERMISSIVE INTERLOCK FOR EXHAUST FANS. SEE MOTOR CONTROL DIAGRAMS SHEET E-6223.

(4) INSTALL 3/4" CONDUIT WITH (5) #12 AWG FOR RUN PERMISSIVE INTERLOCK FOR CHILLED WATER PUMPS. SEE MOTOR CONTROL DIAGRAMS SHEETS E-6220 AND E-6221.

NO	DATE	CLASS REV	ADC	DESCRIPTION	DWN	DES	CHKD	SUB	APP

AECOM

RLWTF-UP LOW LEVEL WASTE SUBPROJECT

CONDUIT AND WIRE SCHEDULE

BLDG. 251 TA-50

DRAWN V DAVISON

DESIGN S MOORE

CHECKED D MOE

DATE 5/8/14

SUBMITTED MANNY TARIN

APPROVED FOR RELEASE ED ARTIGLIA

Los Alamos NATIONAL LABORATORY PO Box 1663 Los Alamos, New Mexico 87545

SHEET E-7203

115 OF 118

CLASSIFICATION REVIEWER DATE

PROJECT ID 100761

DRAWING NO C55865

REV 0

File Location: P:\RLWTF LOW-LEVEL WASTE FACILITY\500 CAD\C55865 CAD\SHEETS\18 ELECTRICAL\55865-E-7203-R0.DWG
Plotted By: DAVISON, VANESSA Plot Date: Friday, May 02, 2014

TELECOMMUNICATIONS SYMBOL LEGEND

(ALL SYMBOLS SHOWN ARE NOT NECESSARILY USED ON THE DRAWINGS)

SYMBOL	DESCRIPTION
	NEW WORK
	HIDDEN OR BURIED
	MULTI-OUTLET ASSEMBLY
	CABLE TRAY
	DUPLEX RECEPTACLE OUTLET
	SPECIAL PURPOSE OUTLET – USE SUBSCRIPT TO IDENTIFY TYPE IN SPECS
	CONDUIT DOWN
	CONDUIT UP
	CONDUIT UP AND DOWN
	CONDUIT SEAL
	CONDUIT CAP
	TELECOMMUNICATIONS OUTLET (2-PORT VOICE)
	TELECOMMUNICATIONS OUTLET (4-PORT VOICE/DATA)
	FLOOR MOUNTED TELECOMMUNICATIONS OUTLET (4-PORT)
S	WALL SPEAKER, 15W
S	CEILING SPEAKER, 4W
J	JUNCTION BOX
T	TELECOMMUNICATIONS RACEWAY
1	KEYED NOTE DESIGNATION
3	ELECTRICAL EQUIPMENT DESIGNATION
5	MECHANICAL EQUIPMENT DESIGNATION
7	NAMEPLATE DESIGNATION

ABBREVIATIONS

AFF	ABOVE FINISHED FLOOR
BOT	BOTTOM OF TRAY
EXP	EXPLOSION PROOF
FCS	FACILITY CONTROL SYSTEM
GFE	GOVERNMENT FURNISHED EQUIPMENT
PA	PUBLIC ADDRESS SYSTEM
RGS	RIGID GALVANIZED STEEL
TC	TELECOMMUNICATION
WP	WEATHERPROOF

NO	DATE	CLASS REV	ADC	DESCRIPTION	DWN	DES	CHKD	SUB	APP

AECOM

RLWTF-UP LOW LEVEL WASTE SUBPROJECT

SYMBOL LEGEND AND ABBREVIATIONS

BLDG. 251 TA-50

DRAWN	V DAVISON
DESIGN	S MOORE
CHECKED	G MOE
DATE	5/8/14

SUBMITTED MANNY TARIN

APPROVED FOR RELEASE ED ARTIGLIA

Los Alamos NATIONAL LABORATORY PO Box 1663 Los Alamos, New Mexico 87545

SHEET T-0201

116 OF 118

CLASSIFICATION | REVIEWER | DATE

PROJECT ID 100761 | DRAWING NO C55865 | REV 0

EUGENE DAVID MOE NEW MEXICO 21369 PROFESSIONAL ENGINEER

File Location: P:\RLWTF LOW-LEVEL WASTE FACILITY\500 CAD\C55865 CUB\SHEETS\17 TELECOMMUNICATIONS\55865-T-0201-RD.DWG
Plotted By: DAVISON, VANESSA; Plot Date: Friday, May 02, 2014

12601

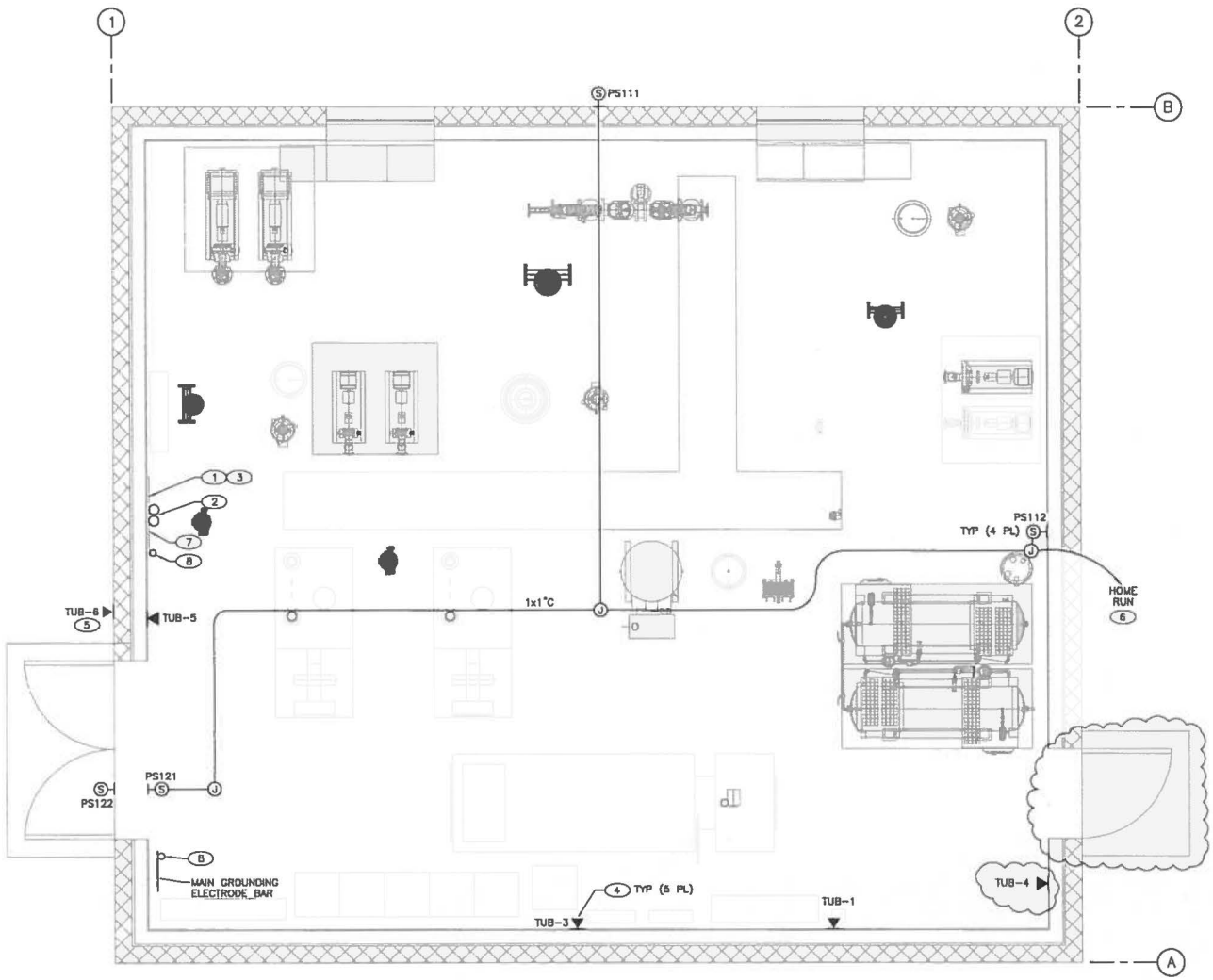

TELECOMMUNICATIONS AND PAGING PLAN

1/2"=1'-0"

GENERAL NOTES

1. IF THIS SHEET IS NOT 24" X 36", THEN IT IS A REDUCED SIZE PLOT. USE THE GRAPHIC SCALE ACCORDINGLY.
2. SEE DRAWING C55864 SHEET E-7121 FOR CABLE SCHEDULE.
3. ALL CONDUIT IS 1" UNLESS OTHERWISE NOTED.
4. SEE DRAWING C55864, SHEET T-0001 FOR GENERAL TELECOMMUNICATION NOTES, LEGEND AND ABBREVIATIONS.

KEYED NOTES

1. TELECOMMUNICATION BACKBOARD: INSTALL 3'X6' SHEET OF 3/4" ADA GRADE AB GROUP SANDED INTERIOR PLYWOOD FINISHED WITH TWO COATS OF WHITE OR LIGHT GRAY FIRE RETARDING PAINT ON ALL SIDES. WALL CABINET WILL BE INSTALLED AND SPECIFIED AS COORDINATED WITH LANL TELECOMMUNICATIONS GROUP.
2. ENTRANCE CONDUITS THROUGH FLOOR SLAB. SEE CONDUIT PLAN SHEET E-1204.
3. LANL TO PROVIDE AND INSTALL TELECOMMUNICATION TERMINATION PANEL (PANEL NOT SHOWN).
4. INSTALL 4 11/16" SQUARE, 2 1/8" DEEP OUTLET BOX WITH SINGLE DEVICE RAISED COVER. FACE PLATES, MODULAR CONNECTORS AND CABLE TO BE FURNISHED BY LANL. FIELD ROUTE 1 1/4" CONDUIT FROM EACH OUTLET TO TELECOMMUNICATIONS BACK BOARD (TELECOMMUNICATIONS CONDUIT NOT SHOWN).
5. INSTALL TELECOMMUNICATIONS OUTLET ON 12"x12" WHITE PLYWOOD FOR EXTERIOR PHONE.
6. INSTALL TWISTED PAIR UNSHIELDED SPEAKER CABLE FOR PAGING SYSTEM. INTERCONNECT SPEAKERS AS SINGLE PAGING ZONE. SEE WIRING DIAGRAM ON DRAWING C55864 SHEET T-6101.
7. INSTALL 4"X12"X1/4" COPPER TELECOMMUNICATIONS MAIN GROUNDING BUSBAR WITH INSULATED STANDOFFS AND PRE-DRILLED 1/4" HOLES, IN LOCATION SHOWN.
8. BOND TELECOMMUNICATIONS BUSBAR TO MAIN GROUNDING ELECTRODE BAR USING DEDICATED, THW, INSULATED, #4/0 AWG GROUND CONDUCTOR VIA CONDUIT THROUGH FLOOR SLAB. SEE CONDUIT PLAN SHEET E-1204.

NO	DATE	CLASS REV	ADC	DESCRIPTION	DWN	DES	CHKD	SUB	APP
1	7/7/14	U		ADDED DOOR, MOVED JACK					

AECOM

RLWTF-UP LOW LEVEL WASTE SUBPROJECT

TELECOMMUNICATIONS AND PAGING PLAN

BLDG. 251 TA-50

DRAWN	V DAVISON
DESIGN	S MOORE
CHECKED	G MOE
DATE	5/8/14

SUBMITTED: MANNY TARIN

APPROVED FOR RELEASE: ED ARTIGLIA

Los Alamos NATIONAL LABORATORY PO Box 1663 Los Alamos, New Mexico 87545

SHEET T-1200

117 OF 118

CLASSIFICATION | REVIEWER | DATE

PROJECT ID 100761 | DRAWING NO C55865 | REV 1

M. EVELYN ROGERS NEW MEXICO 22184 PROFESSIONAL ENGINEER

4/7/14

File Location: W:\RLWTF LOW-LEVEL WASTE FACILITY\500 CAD\C55865 CUB\SHEETS\17 TELECOMMUNICATIONS\55865-T-1200-R1.DWG
Plotted By: BROZEMAN, DARLENE; Plot Date: Thursday, July 03, 2014
Plotted By: BROZEMAN, DARLENE; Plot Date: Thursday, July 03, 2014

20921 : 12502

KEYED NOTES

1. INSTALL 1 1/4" MINIMUM DEDICATED CONDUIT TO EACH TELECOMMUNICATION OUTLET. REFER TO CONSTRUCTION SPECIFICATION SECTION 27 1000 OR FLOOR PLAN FOR SIZES.
2. 2-PORT AND 4-PORT TELECOMMUNICATIONS OUTLETS. INSTALL 4-11/16" SQUARE, 2-1/8" DEEP BOX WITH SINGLE DEVICE RAISED COVER.
3. INSTALL 4" X 12" X 1/4" COPPER GROUND BAR WITH INSULATED STANDOFFS AND PRE-DRILLED WITH 1/4" HOLES. INSTALL DEDICATED THW INSULATED 4/0 AWG GROUND CONDUCTOR FROM GROUND BAR TO MAIN ELECTRODE GROUND BAR. SEE SHEET E-1202.

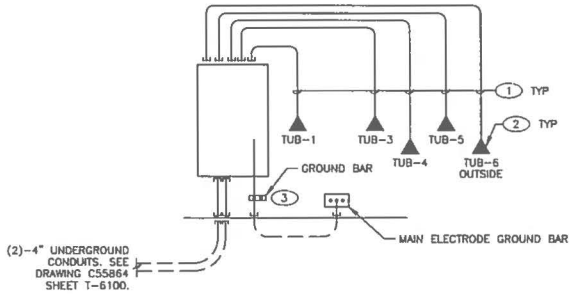

TELECOMMUNICATIONS RISER DIAGRAM

SCALE: NONE

NO	DATE	CLASS REV	ADC	DESCRIPTION	DWN	DES	CHKD	SUB	APP

AECOM

RLWTF-UP LOW LEVEL WASTE SUBPROJECT

RISER DIAGRAM

DRAWN	V DAVISON
DESIGN	S MOORE
CHECKED	G MOE
DATE	5/8/14

BLDG. 251 TA-50

SUBMITTED: MANNY TARIN

APPROVED FOR RELEASE: ED ARTIGLIA

Los Alamos NATIONAL LABORATORY PO Box 1663 Los Alamos, New Mexico 87545

SHEET T-6200

118 OF 118

CLASSIFICATION | REVIEWER | DATE

PROJECT ID 100761 | DRAWING NO C55865 | REV 0

EUGENE DAVID MOE NEW MEXICO 21388 PROFESSIONAL ENGINEER 07 May 2014

File Location: P:\RLWTF LOW-LEVEL WASTE FACILITY\500 CAD\C55865 CUB\SHEETS\17 TELECOMMUNICATIONS\55865-T-6200-R0.DWG
Plotted By: DAVISON, VANESSA Plot Date: Friday, May 02, 2014

12603

CIVIL LEGEND

(NOT ALL SYMBOLS WILL APPLY TO THIS PROJECT)

FILE NO.	SYMBOL	DESCRIPTION
		PROPERTY LINE INDICATOR
		SURFACE DRAINAGE
	EL	EXISTING CONTOUR
	EL	FINISHED CONTOUR
		UNDISTURBED EARTH OR TUFF
		SELECT COMPACT FILL
		ROCK
		COURSE POROUS FILL
		FINE POROUS FILL
		TOP OF SLOPE
		TOE OF SLOPE
	BM	BENCHMARK INDICATOR
	EL	CONTROL ELEVATION INDICATOR
	NO EL	MONUMENT NO=SEQUENTIAL DESIGNATION EL=ELEVATION
	NO EL	BORING INDICATOR NO=SEQUENTIAL DESIGNATION EL=ELEVATION
	EL	EXISTING ELEVATION INDICATOR
	EL	FINISH ELEVATION INDICATOR
		STEAM/COMMUNICATIONS MANHOLE
		STORM DRAIN GRATE
	X	C – PRECAST CONCRETE, COMMUNICATION VAULT
	X	E – PRECAST CONCRETE, ELECTRICAL VAULT
	X	F – PRECAST CONCRETE, FUEL OIL VAULT
	X	G – PRECAST CONCRETE, NATURAL GAS VAULT
	X	T – PRECAST CONCRETE, TELEPHONE VAULT
		THRUST BLOCK
		TEE FITTING
		VALVE
		CULVERT/END SECTION
		DRAINAGE ARROW
		LAYDOWN AREA

SYMBOL	DESCRIPTION
X	C – COMMUNICATION MANHOLE D – STORM DRAIN MANHOLE E – ELECTRICAL MANHOLE G – NATURAL GAS MANHOLE S – SEWER MANHOLE T – TELEPHONE MANHOLE W – WATER MANHOLE
	FIRE HYDRANT
W	UTILITY–WATER REGULATOR VALVE
TM	PRECAST CONCRETE, MANHOLE, TRANSFORMER VAULT
PB	PULL BOX
MH	MANHOLE
TP	TURNING POINT
℄	CENTERLINE
℄	PROPERTY LINE
℄	FLOW LINE
	HANDICAP DESIGNATION
25	INTERSTATE ROUTE
66	U.S. ROUTE
50	STATE ROUTE
	EXISTING PROPERTY CORNER INDICATOR
	NEW PROPERTY CORNER INDICATOR
MATERIAL	VAULT
CO	CLEANOUT
CO	DOUBLE CLEANOUT
CB	CATCH BASIN

SITE UTILITIES

PW	POTABLE WATER
C	CONDENSATE
EMP	EMPTY CONDUIT
S	STEAM
G	NATURAL GAS HIGH PRESSURE (>5 PSI)
SS	SANITARY SEWER
STS	STORM SEWER
F	FIRE PROTECTION WATER
SWTE	SANITARY WASTEWATER TREATED EFFLUENT
E	ELECTRICAL
T	TELECOMMUNICATION

CIVIL LEGEND

DEMOLITION	EXISTING	NEW	DESCRIPTION
	PP	PP	CONCRETE FOUNDATION POWER POLE
			SIDEWALK
			PAVED ROAD
		*73.0	SPOT ELEVATION
	P		POWER LINE
			LIGHT (NS)
			BOLLARD (NS)
			LIGHT POLE (NS)
			FIBER OPTIC MARKER (NS)
	E		ELECTRIC BOX (NS)
			GROUND POLE (NS)
	AH		AC & HEATING UNIT (NS)
	GND		SEWAGE TANK (NS)
X			BUSH (NS)
	PB		PHONE BOX (NS)
			FLOW GAUGE (NS)
X			DECIDUOUS TREE (NS)
			AREA INLET (NS)
			ELECTRICAL PULLBOX (NS)
			CHAIN LINK FENCE
			GUARD RAIL (NS)
		E	UNDERGROUND ELECTRIC (NS)
	AW		ABOVE GROUND WATER (NS)
	AE		ABOVE GROUND ELECTRIC (NS)
	FO		UNDERGROUND FIBER OPTIC (NS)
	W FP	FP	FIRE PROTECTION WATER (NS)
	AFO		ABOVE GROUND FIBER OPTIC (NS)
	W	W	UNDERGROUND WATER (NS)
RLW	RLW		RADIOACTIVE WASTE (NS)
	FO		FIBER OPTIC (NS)
SS	SS	SS	SANITARY SEWER (NS)
		NG	NATURAL GAS (NS)
	UKN		UNKNOWN UTILITY (NS)
UKN	FA		FIRE ALARM LINE (NS)
W DOM	W DOM	DW	DOMESTIC WATER SERVICE (NS)
SD	SD		STORM DRAIN (NS)
	COMM		COMMUNICATION CONDUITS (NS)
	SS–FORCE MAIN	SSFM	SANITARY SEWER FORCE MAIN (NS)

CIVIL LEGEND

DEMOLITION	EXISTING	NEW	DESCRIPTION
			LIMITS OF DEMOLITION AND/OR CONSTRUCTION (NS)
			PROPOSED / EXISTING LINETYPE (PLAN & PROFILE)
			ASPHALT PAVEMENT
			DIRECTION OF TRAFFIC
			SILT FENCE BOUNDARY (NS)
			CHECK VALVE (NS)
			GATE VALVE (NS)
			BACKFLOW PREVENTER
			(PIV) POST INDICATOR VALVE
			FORCE MAIN CLEANOUT (NS)
			COORDINATE, NORTHING & EASTING
			MANHOLE
			CONCRETE JERSEY BARRIER

DETAIL CALLOUT — 1 / C-5000 — 1 = DETAIL NUMBER; C-5000 = REFERENCE SHEET

ABBREVIATIONS

ADA	AMERICANS WITH DISABILITIES ACT	TOT	TOP OF THRESHOLD (NS)
BFP	BACK FLOW PREVENTOR	TOP	TOP OF PAVEMENT (NS)
CMP	CULVERT CORRUGATED METAL PIPE	TOS	TOP OF SLOPE (NS)
FF	FINISHED FLOOR	PIV	POST INDICATOR VALVE
LLW	LOW LEVEL WASTE	U & I	UTILITIES AND INFRASTRUCTURE
TOC	TOP OF CONCRETE (NS)	ZLD	ZERO LIQUID DISCHARGE
TOW	TOP OF WALL (NS)		

GENERAL NOTES

1. BASELINE UTILITY DRAWINGS ORIGINALS FROM LANL UMAP AND DO NOT CONFORM TO LANL DRAFTING STANDARDS MANUAL.

NO	DATE	CLASS REV	ADC	DESCRIPTION	DRW	DES	CHKD	SUB	APP

AECOM

RLWTF–UP LOW LEVEL WASTE SUBPROJECT

SYMBOL LEGEND

BLDG. 252 TA–50

DRAWN C. MORGAN | DESIGN C. MORGAN | CHECKED M. TARIN MT | DATE 5/8/14

SUBMITTED MANNY TARIN — APPROVED FOR RELEASE ED ARTIGLIA

Los Alamos NATIONAL LABORATORY — PO Box 1663 Los Alamos, New Mexico 87545

SHEET C–0300 — 1 OF 6

CLASSIFICATION | REVIEWER | DATE

PROJECT ID 100761 | DRAWING NO C55866 | REV 0

MANUEL TARIN III — NEW MEXICO — 16741 — PROFESSIONAL ENGINEER — 5/8/2014

File Location: P:_TECHNOLOGY\122308031 - RLWTF\300 CAD\300 CAD DIRECTORY\ACCAD\URUM STORAGE\LA\SHEET\AS888-C-0300-RALDWG
Plot Date: Tuesday, May 06, 2014
Plotted By: BROEHMAN, DARLENE

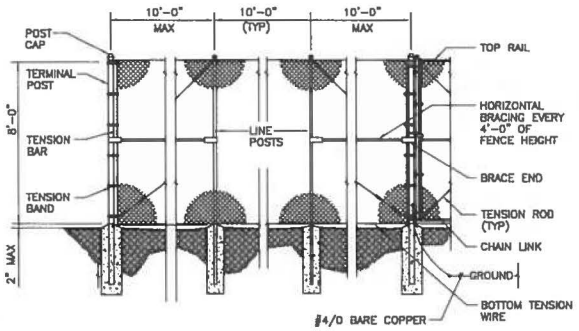

ELEVATION VIEW

1 1 C-1003 1 C-4000 FENCE DETAIL
SCALE: NONE

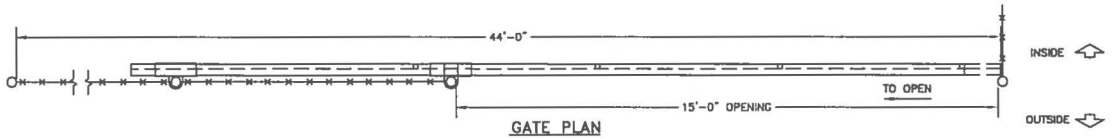

GATE PLAN

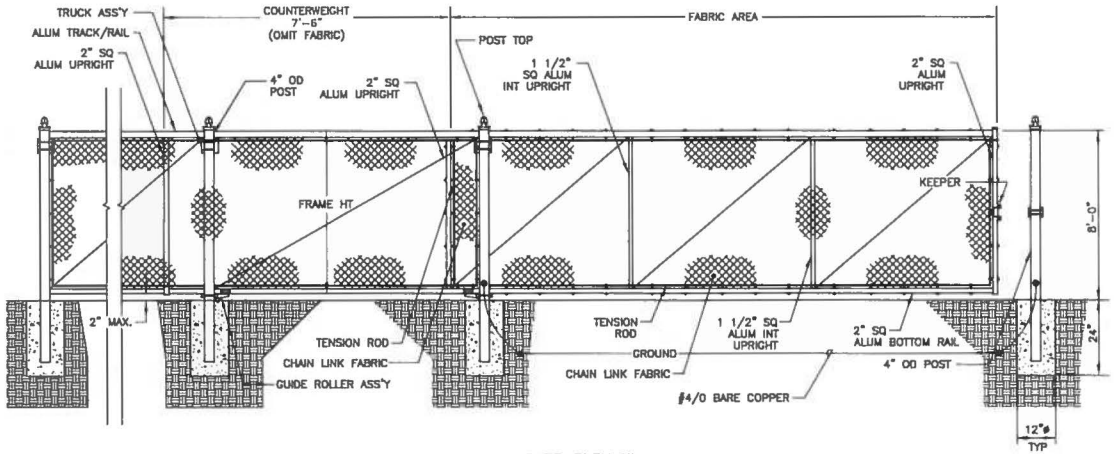

GATE ELEVATION

1 2 C-1003 2 C-4000 SINGLE CANTILEVERED SLIDING GATE
SCALE: NONE

GENERAL NOTES

1. COMPRESSIVE STRENGTH OF ALL CONCRETE SHALL BE 4000 PSI.
2. COMPACT SUBGRADE UNDER AND 12" EITHER SIDE OF FOOTING TO 95% MAXIMUM DENSITY, PER ASTM D-1557 TO 6" MIN. DEPTH.
3. SEE DRAWING C55864, SHEET E-1003 FOR LIGHTING PROTECTION MAST INSTALLATION LOCATIONS RELATIVE TO FENCE.

KEYED NOTES

1 DETAILS ARE REFERENCED FROM DRAWING C55864.

NO	DATE	CLASS REV	ADC	DESCRIPTION	DWN	DES	CHKD	SUB	APP

AECOM

RLWTF-UP LOW LEVEL WASTE SUBPROJECT

DRUM STORAGE FENCE DETAILS

BLDG. 252 TA-50

DRAWN	C. MORGAN
DESIGN	C. MORGAN
CHECKED	M. TARIN
DATE	5/8/14

SUBMITTED: MANNY TARIN
APPROVED FOR RELEASE: ED ARTIGLIA

Los Alamos NATIONAL LABORATORY PO Box 1663 Los Alamos, New Mexico 87545

SHEET C-5300
2 OF 6

CLASSIFICATION | REVIEWER | DATE

PROJECT ID 100761 | DRAWING NO C55866 | REV 0

MANUEL TARIN III NEW MEXICO 18741 PROFESSIONAL ENGINEER
5/1/14

File Location: P:_TECHNOLOGY\802398\31 - RLWTF\500 CAD\502 CAD DIRECTORY\AECOM\DRUM STORAGE\C\SHEET\55866-C-5300-RA.DWG
Plotted By: BRIDERMAN, DARLENE; Plot Date: Tuesday, May 06, 2014

12605

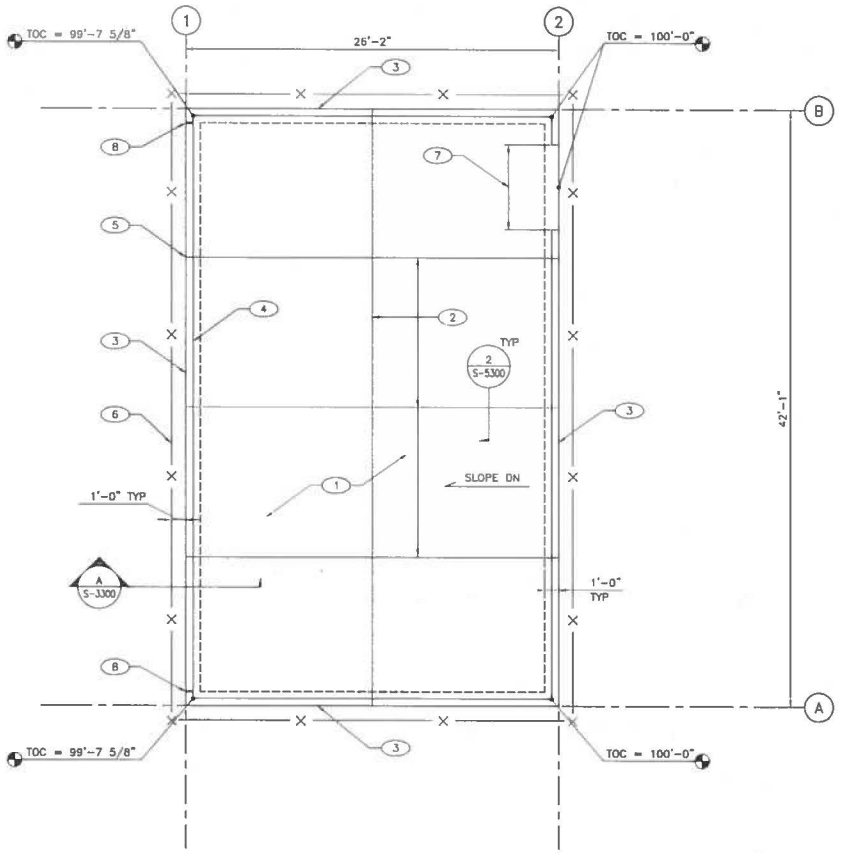

FOUNDATION PLAN

0' 1' 2' 4' 8' 8'

1/4"=1'-0"

GENERAL NOTES

1. IF THIS SHEET IS NOT 24"x36", THEN IT IS A REDUCED SIZE PLOT. USE GRAPHIC SCALE ACCORDINGLY.
2. ABBREVIATIONS & LEGEND ARE LOCATED ON SHEET C55864 S-0001. GENERAL STRUCTURAL NOTES ARE LOCATED ON SHEET C55864 S-0002.
3. ELEVATION 100'-0" CORRESPONDS TO MEAN SEA LEVEL ELEVATION OF 7255.50 FEET.
4. FOR SCHEDULES, SEE SHEET S-7300.

KEYED NOTES

(1) 8" THICK SLAB ON GRADE REINF W/ #5@18" O.C. EW.
(2) CONCRETE CONTROL JOINT.
(3) 12" GRADE BEAM, SEE A/S-3300.
(4) 6" WIDE X 4" HIGH CONCRETE CURB AROUND PERIMETER, SEE A/S-3300.
(5) AT LOCATIONS OF GRADE BEAM CONTROL JOINTS (6 TOTAL), EXTEND HALF OF GRADE BEAM REINF THROUGH CONTROL JOINT.
(6) FOR CHAIN LINK FENCING, SEE C-5300.
(7) DISCONTINUE CURB AT GATE OPENING, SEE C-5300.
(8) 1"Ø SS PIPE W/ MANUAL BUTTERFLY VALVE.

NO	DATE	CLASS REV	ADC	DESCRIPTION	DWN	DES	CHKD	SUB	APP

AECOM

RLWTF-UP LOW LEVEL WASTE SUBPROJECT

FOUNDATION PLAN

BLDG. 252 TA-50

DRAWN	G.FLORES
DESIGN	C.ROSENBERGER
CHECKED	D.AKELROD
DATE	05-06-14

SUBMITTED MANNY TARIN

APPROVED FOR RELEASE ED ARTIOLA

Los Alamos NATIONAL LABORATORY PO Box 1663 Los Alamos, New Mexico 87545

SHEET S-1300

3 OF 6

CLASSIFICATION | REVIEWER | DATE

PROJECT ID 100761

DRAWING NO C55866

REV 0

JAMES M. WEEKS NEW MEXICO 11384 REGISTERED PROFESSIONAL ENGINEER

5/12/14

File: Los Alamos PLOT PROJECT\PLANS\RLWTF LL\DRAFTING\MODEL\CAD3 [1]\R[A]\55866-S-1300.DWG
Plotted By: FLORES, GABRIEL Plot Date: Monday, May 12, 2014

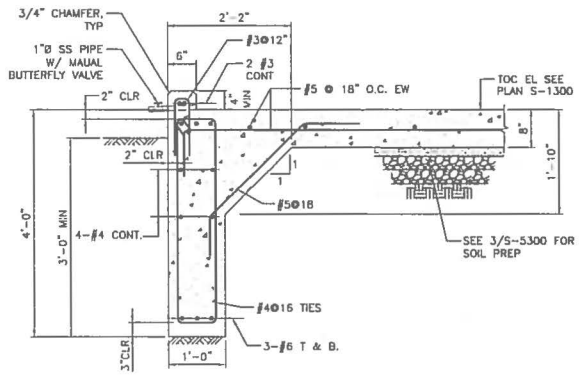

A S-1300 SECTION

1" 9" 6" 3" 0 1"
1"=1'-0"

GENERAL NOTES

1. IF THIS SHEET IS NOT 24"x36", THEN IT IS A REDUCED SIZE PLOT. USE GRAPHIC SCALE ACCORDINGLY.
2. ABBREVIATIONS & LEGEND ARE LOCATED ON SHEET C55864 S-0001. GENERAL STRUCTURAL NOTES ARE LOCATED ON SHEET C55864 S-0002.
3. FOR LAP SPLICES AND BASIC DEVELOPMENT LENGTHS OF REINFORCEMENT, SEE SCHEDULE ON S-7300.

NO	DATE	CLASS REV	ADC	DESCRIPTION	DWN	DES	CHKD	SUB	APP

AECOM

RLWTF-UP LOW LEVEL WASTE SUBPROJECT

STRUCTURAL SECTIONS

BLDG. 252 TA-50

DRAWN	G.FLORES
DESIGN	C.ROSENBERGER
CHECKED	DW D.AXELROD
DATE	05-06-14

SUBMITTED MANNY TARIN

APPROVED FOR RELEASE ED ARTIGLIA

Los Alamos NATIONAL LABORATORY PO Box 1663 Los Alamos, New Mexico 87545

SHEET S-3300

4 OF 6

CLASSIFICATION | REVIEWER | DATE

PROJECT ID 100761 | DRAWING NO C55866 | REV 0

JAMES M. WEEKS NEW MEXICO 11384 REGISTERED PROFESSIONAL ENGINEER

James M. Weeks 5/12/14

File Location: Y:\IDE PROJECTS\LANL\LANL RLWTF LLV\DRAFTING\MODEL\CADD II\DRUM\55866-S-3300.DWG
Plotted By: FLORES, GABRIEL Plot Date: Monday, May 12, 2014
: 12607

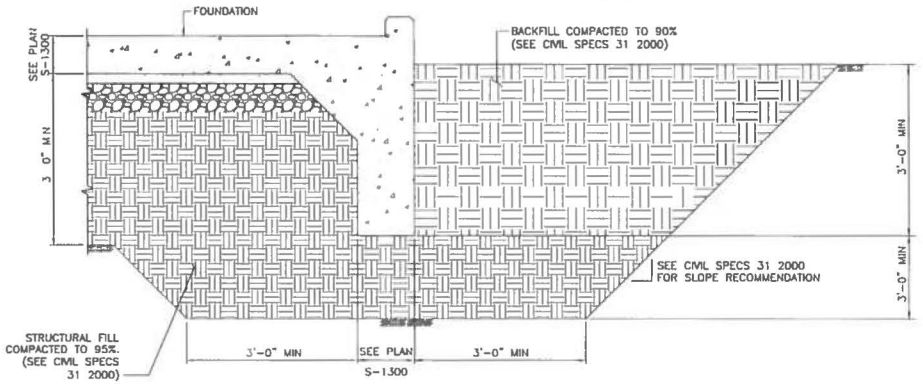

SECTION VIEW

1 S-3300 TYPICAL OVER EXCAVATION

1' 6" 0 1' 2' 3'
1/2"=1'-0"

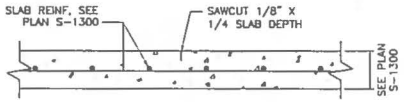

SECTION VIEW

2 S-1300 TYPICAL CONTROL JOINT

1' 6" 0 1' 2' 3'
1/2"=1'-0"

GENERAL NOTES

1. IF THIS SHEET IS NOT 24"x36", THEN IT IS A REDUCED SIZE PLOT. USE GRAPHIC SCALE ACCORDINGLY.
2. ABBREVIATIONS & LEGEND ARE LOCATED ON SHEET C55864 S-0001. GENERAL STRUCTURAL NOTES ARE LOCATED ON SHEET C55864 S-0002.

NO	DATE	CLASS REV	ADC	DESCRIPTION	DWN	DES	CHKD	SUB	APP

AECOM

RLWTF-UP LOW LEVEL WASTE SUBPROJECT

TYPICAL DETAILS

DRAWN G.FLORES
DESIGN C.GOSNOLD
CHECKED D.AXELROD
DATE 05-08-14

BLDG. 252 TA-50

SUBMITTED MANNY TARIN

APPROVED FOR RELEASE ED ARTIOLA

Los Alamos NATIONAL LABORATORY PO Box 1663 Los Alamos, New Mexico 87545

SHEET S-5300
5 OF 6

CLASSIFICATION REVIEWER DATE

PROJECT ID 100761 DRAWING NO C55866 REV 0

JAMES M. WEAVER NEW MEXICO 11384 REGISTERED PROFESSIONAL ENGINEER
5/12/14

89521

File: Lpcs:\\ade PROJECTS\LANL\LANL RLVTF LLW\DRAFTING\MODELS\CAD IN\DRAWS\55866-S-5300.DWG
Plotted By: FLORES, DARREL Plot Date: Monday, May 12, 2014

REINFORCING SPLICE AND EMBEDMENT SCHEDULE

BAR SIZE	EMBEDMENT & CLASS A SPLICE LENGTH	CLASS B SPLICE LENGTH	STD HOOK DEVELOPEMENT LENGTH
3	1'-7"	2'-1"	8"
4	2'-1"	2'-9"	10"
5	2'-7"	3'-5"	1'-0"
6	3'-1"	4'-1"	1'-3"
7	4'-6"	5'-11"	1'-5"
8	5'-2"	6'-9"	1'-7"
9	5'-10"	7'-7"	1'-10"
10	6'-7"	8'-6"	2'-1"

NOTES:

1. SPLICE LENGTHS ARE TYPICAL UNLESS OTHERWISE NOTED ON PLANS AND DETAILS.
2. SPLICES SHALL BE STAGGERED AT LEAST 24".
3. FOR HORIZONTAL BARS WITH MORE THAN 12" OF FRESH CONCRETE CAST BELOW THE SPLICE OR EMBEDMENT. LENGTHS SHALL BE 130% OF THAT SHOWN.
4. TABLE IS BASED ON f'c = 4,000 PSI.
5. SPLICES ARE CLASS A, EXCEPT WHERE NOTED ON DRAWINGS.
6. SPLICE LOCATIONS WHERE REQUIRED ARE INDICATED ON DETAILS. ADDITIONAL SPLICES AS NEEDED FOR MEANS AND METHODS OF CONSTRUCTION BY CONTRACTOR.

NO	DATE	CLASS REV	ADC	DESCRIPTION	DWN	DES	CHKD	SUB	APP

AECOM

RLWTF-UP LOW LEVEL WASTE SUBPROJECT

STRUCTURAL SCHEDULES

BLDG. 252 TA-50

DRAWN	G.FLORES
DESIGN	C.ROSENBERGER
CHECKED	D.AXELROD
DATE	05-06-14

SUBMITTED: MANNY TAREN

APPROVED FOR RELEASE: ED ARTIGLIA

Los Alamos NATIONAL LABORATORY PO Box 1663 Los Alamos, New Mexico 87545

SHEET S-7300

6 OF 6

CLASSIFICATION | REVIEWER | DATE

PROJECT ID 100761 | DRAWING NO C55866 | REV 0

JAMES M. WEEKS NEW MEXICO 11384 REGISTERED PROFESSIONAL ENGINEER

James M. Weeks 5/12/14

File Location: T:\DOE PROJECTS\LANL\LANL RLWTF LLV\DRAFTING\MODEL\CADD II\DRUM\55866-S-7300.DWG
Plotted By: FLORES, GABRIEL Plot Date: Monday, May 12, 2014
60921 :

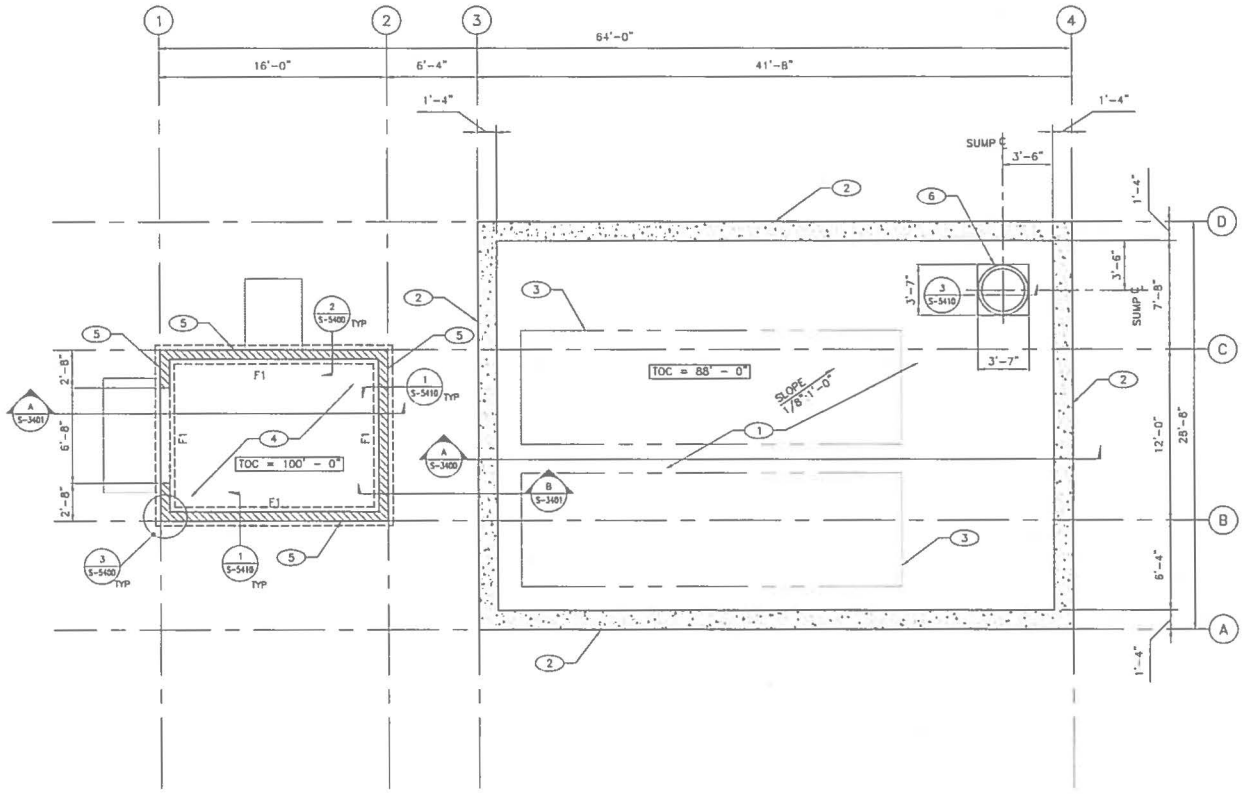

FOUNDATION PLAN

1/4"=1'-0"

GENERAL NOTES

1. IF THIS SHEET IS NOT 24"x36", THEN IT IS A REDUCED SIZE PLOT. USE GRAPHIC SCALE ACCORDINGLY.
2. ELEVATION 100'-0" CORRESPONDS TO MEAN SEA LEVEL ELEVATION OF 7265 FEET.
3. ABBREVIATIONS & LEGEND ARE LOCATED ON SHEET C55864 S-0001. GENERAL STRUCTURAL NOTES ARE LOCATED ON SHEET C55864 S-0002.
4. REFER TO DRAWING C55864 SHEET Q-1400 FOR EQUIPMENT LAYOUTS AND SIZES.
5. FOR SCHEDULES, SEE SHEET S-7400.
6. F# DESIGNATES FOOTING SIZE, SEE FOUNDATION SCHEDULE ON SHEET S-7400.

KEYED NOTES

1. 18" THICK CONCRETE FOUNDATION SLAB WITH #7 @ 9" O.C. EACH WAY, TOP AND BOTTOM.
2. 16" CONCRETE WALL WITH #7 @ 9" O.C. VERTICAL EF AND #5 @ 12" O.C. HORIZONTAL WITH STD HOOKS EF.
3. EFFLUENT TANK, SEE C55864 SHEET Q-1400, REFER TO Q-1401 FOR EMBED REQUIREMENTS.
4. 6" THICK CONCRETE SLAB ON GRADE WITH #4 @ 18" O.C. EACH WAY, MID DEPTH OF SLAB.
5. 8" FULLY GROUTED CMU WALL, REINF W/#5@16" O.C. VERT & 2 #4@4'-0" O.C. HORIZ IN 8" BOND BEAM + TRUSS TYPE JOINT REINF PER MASONRY SPECS.
6. SUMP, SEE DETAIL C55867 P-1400 AND DETAIL 3/S-5410.

NO	DATE	CLASS REV	ADC	DESCRIPTION	DWN	DES	CHKD	SUB	APP

AECOM

RLWTF-UP LOW LEVEL WASTE SUBPROJECT

FOUNDATION PLAN

BLDG. 261 TA-50

DRAWN	G.FLORES
DESIGN	C.RODRIGUEZ
CHECKED	D.AXELROD
DATE	05-06-14

SUBMITTED MANNY TARIN

APPROVED FOR RELEASE ED ARTIOLA

Los Alamos NATIONAL LABORATORY PO Box 1663 Los Alamos, New Mexico 87545

SHEET S-1400

1 OF 69

CLASSIFICATION | REVIEWER | DATE

PROJECT ID 100761 | DRAWING NO C55867 | REV 0

JAMES M. WEAVER NEW MEXICO 11384 REGISTERED PROFESSIONAL ENGINEER

5/12/14

D1527L:
File: Locus Norm: 71700E PROJECTS\LANL\LANL RLWTF LLW\DRAFTING\MODEL\LCASD 13\EFFLUENT\535867-S-1400.DWG
Plotted By: ISABEL GABRIEL File Date: Monday, May 12, 2014

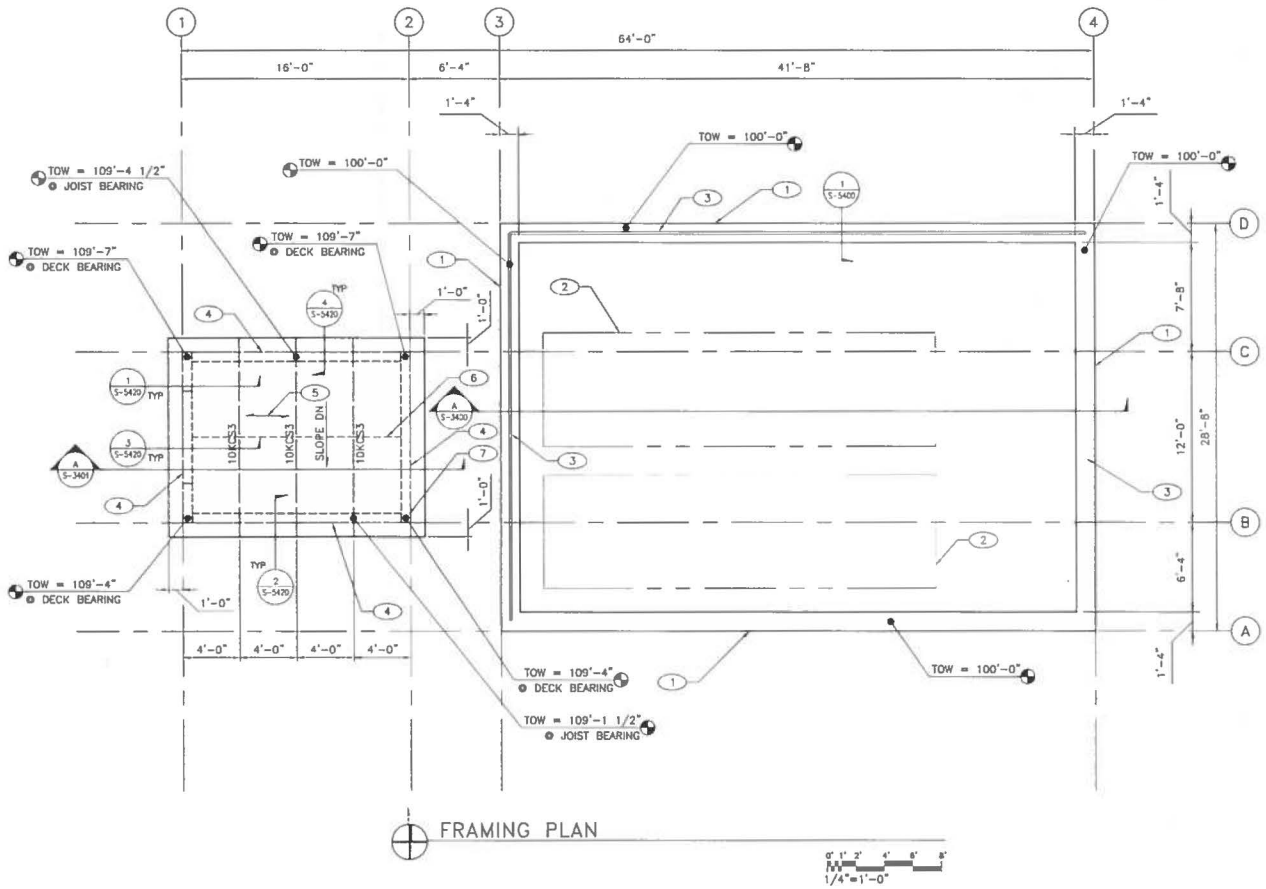

FRAMING PLAN

1/4"=1'-0"

GENERAL NOTES

1. IF THIS SHEET IS NOT 24"x36", THEN IT IS A REDUCED SIZE PLOT. USE GRAPHIC SCALE ACCORDINGLY.
2. ELEVATION 100'-0" CORRESPONDS TO MEAN SEA LEVEL ELEVATION OF 7265 FEET.
3. ABBREVIATIONS & LEGEND ARE LOCATED ON SHEET C55864 S-0001. GENERAL STRUCTURAL NOTES ARE LOCATED ON SHEET C55864 S-0002.
4. REFER TO DRAWING C55864 Q-1400 FOR EQUIPMENT LAYOUTS AND SIZES.
5. ——— – INDICATES SPAN DIRECTION OF ROOF DECK.
6. DO NOT HANG LOADS FROM METAL DECK. PROVIDE ENGINEERED STRUCTURAL SYSTEM TO HANG ALL LOADS FROM STEEL JOISTS OR BEAMS. THIS INCLUDES BUT IS NOT LIMITED TO METAL STUD SOFFITS OR CEILING FRAMING, MECHANICAL, ELECTRICAL, OR PLUMBING EQUIPMENT.
7. FOR OPEN WEB JOIST DESIGN, CRITERIA, SEE JOIST NOTES ON SHEET S-0002.
   a. ALL OSHA REQUIREMENTS AND STANDARDS FOR OPEN WEB/BAR JOISTS SHALL BE FOLLOWED.
   b. THE MAXIMUM OPEN WEB JOIST LIVE LOAD DEFLECTION SHALL BE 1/360 OF THE SPAN LENGTH.
   c. THE OPEN WEB JOIST FABRICATOR SHALL SUBMIT SHOP DRAWINGS AND CALCULATIONS WET SEALED BY A CIVIL ENGINEER LICENSED IN THE STATE OF NEW MEXICO.
   d. JOIST MANUFACTURER SHALL CHECK JOIST BRIDGING AND MODIFY AS REQUIRED TO ADEQUATELY BRACE THE BOTTOM CHORDS. SEE DETAIL 3/S-5420. FIELD INSTALL WEB MEMBERS ON JOISTS FROM POINT OF LOAD TO NEAREST PANEL POINT ON OPPOSITE CHORD, WHEN CONCENTRATED LOADS ARE NOT APPLIED DIRECTLY AT PANEL POINTS. SEE DETAIL 1/S-5401.
   e. ALL JOISTS SHALL BE DESIGNED WITH AN ADDITIONAL 300LB ROVING LOAD AT TOP OR BOTTOM CHORD.

KEYED NOTES

1. 16" CONCRETE WALL, SEE S-1400 FOR REINFORCING.
2. EFFLUENT TANK BELOW, SEE C55867 Q-1400.
3. GUARDRAIL, SEE DETAIL 1/S-5400 AND 3/S-5401.
4. CMU WALL BELOW.
5. ROOF DECK: 1 1/2" DEEP B-DECK, 18 GAGE, G-60 AS PROVIDED BY CSI METAL DECK GROUP OR APPROVED EQUAL. DECK SHALL BE CONTINUOUS OVER 3 OR MORE SPANS (4 SUPPORTS). SEE ARCHITECTURAL DRAWINGS FOR INSULATION, ROOFING, ETC. ATTACH DECK AS FOLLOWS USING HILTI X-ENP-19 FASTENERS (ICC ESR-2197):
   A. PERPENDICULAR BEARINGS AT SHEET LAP: 36/9 PATTERN (9 FASTENERS FOR EACH 3'-0" PANNEL SECTION, SEE 2/S-5401.
   B. PERPENDICULAR BEARINGS AT NON-LAP: 36/9 PATTERN (9 FASTENERS FOR EACH 3'-0" PANNEL SECTION, SEE 2/S-5401.
   C. SIDE SEAMS: HILTI #10X3/4" MIN HWH OR HHWH, SELF DRILLING STEEL SCREWS @ 6" O.C. CONFORMING TO C1513-10R REQUIREMENTS (ICC ESR-2196).
6. L1 1/4X1 1/4X7/64 HORIZONTAL BRIDGING TOP & BOTTOM CHORD, SEE DETAIL 4/S-5420.
7. CHANGE OF WALL HEIGHT BY 2 1/2" TYP, FOR JOIST BEARING @ 4 CORNERS.

NO	DATE	CLASS REV	ADC	DESCRIPTION	DWN	DES	CHKD	SUB	APP

AECOM

RLWTF-UP LOW LEVEL WASTE SUBPROJECT

FRAMING PLAN

DRAWN	G.FLORES
DESIGN	C.RODENBECK
CHECKED	D.AXELROD
DATE	05-06-14

BLDG. 261 TA-50

SUBMITTED: MANNY TARIN

APPROVED FOR RELEASE: ED ARTIGLIA

Los Alamos NATIONAL LABORATORY PO Box 1663 Los Alamos, New Mexico 87545

SHEET: S-1401

2 OF 69

CLASSIFICATION | REVIEWER | DATE

PROJECT ID: 100761 | DRAWING NO: C55867 | REV: 0

JAMES M. WEEKS NEW MEXICO 11384 REGISTERED PROFESSIONAL ENGINEER

5/12/14

ENGR 11521

File: Locus Name: Y:\ADE PROJECTS\ALANL\ALANL_RLWTF LLW\DRAFTING\MODEL\CAD3 (INSTFLUENT\553867-S-1402.DWG

Plotted By: FLORES, GABRIEL Plot Date: Monday, May 12, 2014

GENERAL NOTES

1. IF THIS SHEET IS NOT 24"x36", THEN IT IS A REDUCED SIZE PLOT. USE GRAPHIC SCALE ACCORDINGLY.
2. ABBREVIATIONS & LEGEND ARE LOCATED ON SHEET C55864 S-0001. GENERAL STRUCTURAL NOTES ARE LOCATED ON SHEET C55864 S-0002.
3. FOR LAP SPLICES AND BASIC DEVELOPMENT LENGTHS OF REINFORCEMENT, SEE SCHEDULE ON SHEET S-7400.

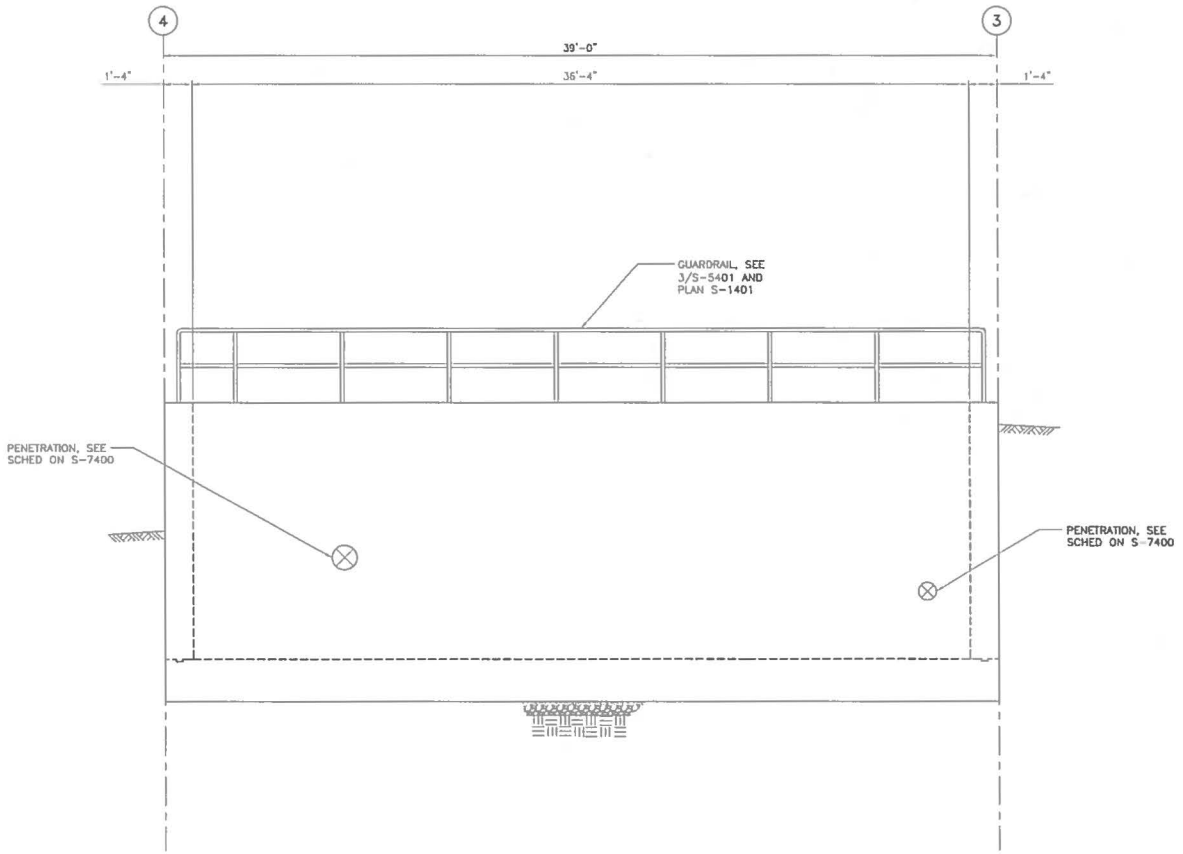

NORTH ELEVATION

1' 0 1' 2' 3' 4'
3/8"=1'-0"

NO	DATE	CLASS REV	ADC	DESCRIPTION	DWN	DES	CHKD	SUB	APP

AECOM

RLWTF-UP LOW LEVEL WASTE SUBPROJECT

STRUCTURAL ELEVATIONS

BLDG. 261 TA-50

DRAWN	G.FLORES
DESIGN	C.REDENBERGER
CHECKED	D.AKELROD
DATE	05-06-14

SUBMITTED: MANNY TARIN

APPROVED FOR RELEASE: ED ARTIGLIA

Los Alamos NATIONAL LABORATORY PO Box 1663 Los Alamos, New Mexico 87545

SHEET S-2400

3 OF 69

CLASSIFICATION | REVIEWER | DATE

PROJECT ID 100761 | DRAWING NO C55867 | REV 0

JAMES M. WEEKS NEW MEXICO 11384 REGISTERED PROFESSIONAL ENGINEER

James M. Weeks 5/12/14

12912

File Location: Y:\IDOE PROJECTS\LANL\LANL RLWTF LLW\DRAFTING\MODEL\CADD II\EFFLUENT\55867-S-2400.DWG
Plotted By: FLORES, GABRIEL Plot Date: Monday, May 12, 2014

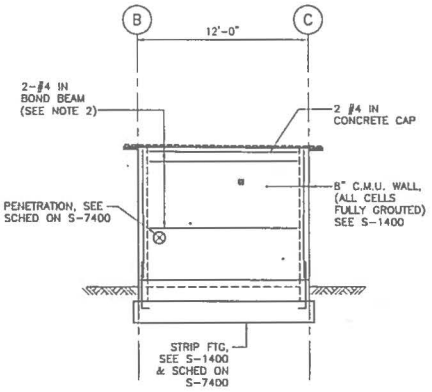

EAST ELEVATION

0' 1' 2' 4' 6' 8'
1/4"=1'-0"

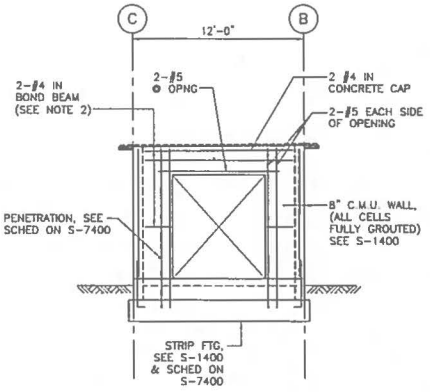

WEST ELEVATION

0' 1' 2' 4' 6' 8'
1/4"=1'-0"

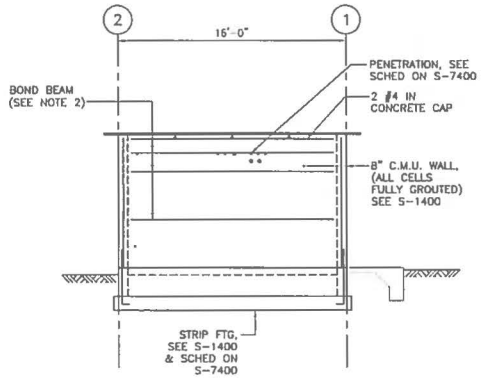

NORTH ELEVATION

0' 1' 2' 4' 6' 8'
1/4"=1'-0"

GENERAL NOTES

1. IF THIS SHEET IS NOT 24"x36", THEN IT IS A REDUCED SIZE PLOT. USE GRAPHIC SCALE ACCORDINGLY.
2. ABBREVIATIONS & LEGEND ARE LOCATED ON SHEET C55864 S-0001. GENERAL STRUCTURAL NOTES ARE LOCATED ON SHEET C55864 S-0002.
3. FOR LAP SPLICES AND BASIC DEVELOPMENT LENGTHS OF REINFORCEMENT, SEE SCHEDULE ON SHEET S-7400.

NO	DATE	CLASS REV	ADC	DESCRIPTION	DWN	DES	CHKD	SUB	APP

AECOM

RLWTF-UP LOW LEVEL WASTE SUBPROJECT

STRUCTURAL ELEVATIONS

DRAWN G.FLORES
DESIGN C.GOODRIDGE
CHECKED D.AKELROD
DATE 05-06-14

BLDG. 261 TA-50

SUBMITTED MANNY TARIN
APPROVED FOR RELEASE ED ARTIGLIA

Los Alamos NATIONAL LABORATORY PO Box 1663 Los Alamos, New Mexico 87545

SHEET S-2401
4 OF 69

CLASSIFICATION REVIEWER DATE

PROJECT ID 100761
DRAWING NO C55867
REV 0

JAMES M. WEEKS NEW MEXICO 11384 REGISTERED PROFESSIONAL ENGINEER
5/12/14

C55867 : 1

File Location: T:\DOE PROJECTS\LANL\LANL RLWTF LLW\DRAFTING\MODEL\C4252 [IVDT]LUDITA\55867-S-2401.DWG
Plotted By: FLORES, GABRIEL Plot Date: Monday, May 12, 2014

GENERAL NOTES

1. IF THIS SHEET IS NOT 24"x36", THEN IT IS A REDUCED SIZE PLOT. USE GRAPHIC SCALE ACCORDINGLY.
2. ABBREVIATIONS & LEGEND ARE LOCATED ON SHEET C55864 S-0001. GENERAL STRUCTURAL NOTES ARE LOCATED ON SHEET C55864 S-0002.
3. FOR LAP SPLICES AND BASIC DEVELOPMENT LENGTHS OF REINFORCEMENT, SEE SCHEDULE ON SHEET S-7400.

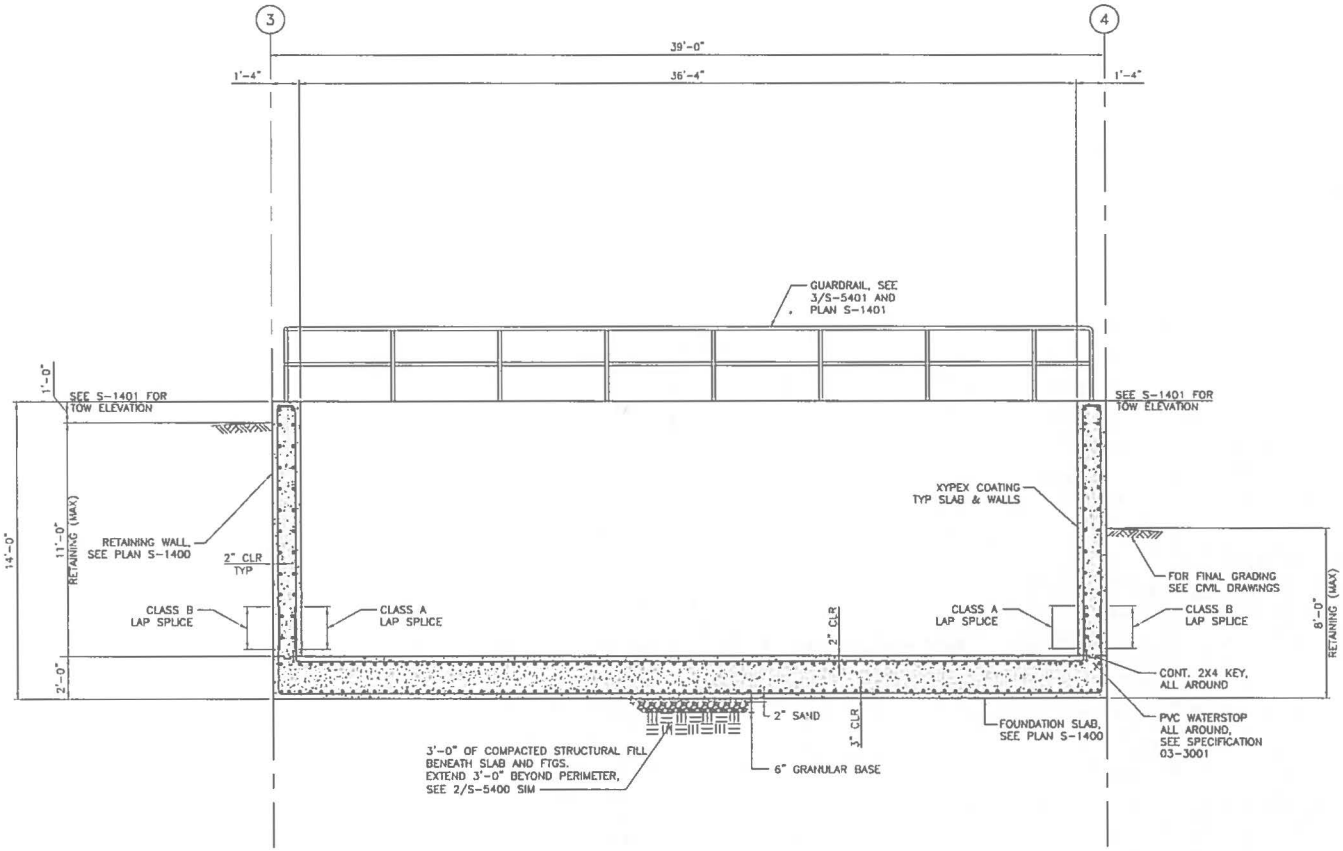

A S-1400 / S-1401 SECTION

1' 0 1' 3' 5' 4'
3/8"=1'-0"

NO	DATE	CLASS REV	ADC	DESCRIPTION	DWN	DES	CHKD	SUB	APP

AECOM

RLWTF-UP LOW LEVEL WASTE SUBPROJECT

STRUCTURAL SECTIONS

BLDG. 261 TA-50

DRAWN	G.FLORES
DESIGN	C.REDDINGER
CHECKED	D.AXELROD
DATE	05-06-14

SUBMITTED MANNY TARIN — APPROVED FOR RELEASE ED ARTIGLIA

Los Alamos NATIONAL LABORATORY PO Box 1663 Los Alamos, New Mexico 87545

SHEET S-3400 — 5 OF 69

CLASSIFICATION | REVIEWER | DATE

PROJECT ID 100761 | DRAWING NO C55867 | REV 0

JAMES M. WEEKS NEW MEXICO 11384 REGISTERED PROFESSIONAL ENGINEER
5/12/14

1527 :
File: Lacie Share 1\ADE PROJECTS\LANL\LANL_RLWTF LL\V\DRAFTING\MODELS\CAD3 [1\LOT1\LIGHT\535867-S-3400.DVG
Plotted By: FLORES, GABRIEL Plot Date: Monday, May 12, 2014

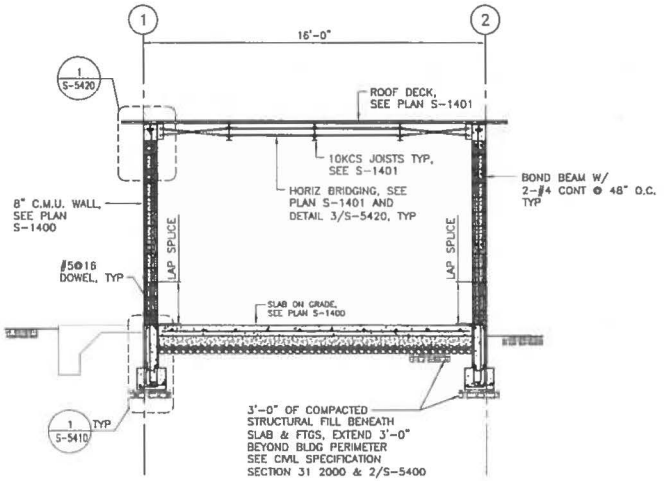

A S-1400 SECTION , S-1401

1' 0 1' 2' 3' 4'
3/8"=1'-0"

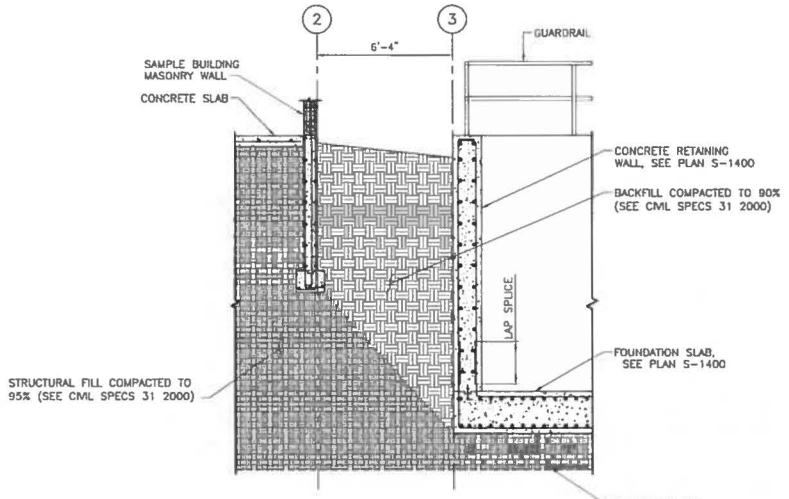

B S-1400 SECTION

1' 0 1' 2' 3' 4'
3/8"=1'-0"

GENERAL NOTES

1. IF THIS SHEET IS NOT 24"x36", THEN IT IS A REDUCED SIZE PLOT. USE GRAPHIC SCALE ACCORDINGLY.
2. ABBREVIATIONS & LEGEND ARE LOCATED ON SHEET C55864 S-0001. GENERAL STRUCTURAL NOTES ARE LOCATED ON SHEET C55864 S-0002.
3. FOR LAP SPLICES AND BASIC DEVELOPMENT LENGTHS OF REINFORCEMENT, SEE SCHEDULE ON S-7400.
4. ALL INFORMATION IS TYPICAL FOR EACH SIDE OF WALL SECTION, UNLESS NOTED OTHERWISE.

NO	DATE	CLASS REV	ADC	DESCRIPTION	DWN	DES	CHKD	SUB	APP

AECOM

RLWTF-UP LOW LEVEL WASTE SUBPROJECT

STRUCTURAL SECTIONS

BLDG. 261 TA-50

DRAWN	G.FLORES
DESIGN	C.ROSENBERGER
CHECKED	DM D.AXELROD
DATE	05-06-14

SUBMITTED MANNY TARIN

APPROVED FOR RELEASE ED ARTIGLIA

Los Alamos NATIONAL LABORATORY PO Box 1663 Los Alamos, New Mexico 87545

SHEET S-3401

6 OF 69

CLASSIFICATION | REVIEWER | DATE

PROJECT ID 100761 | DRAWING NO C55867 | REV 0

JAMES M. WEEKS NEW MEXICO 11384 REGISTERED PROFESSIONAL ENGINEER

James M. Weeks 5/12/14

File Location: Y:\DOE PROJECTS\LANL\LANL RLWTF LLV\DRAFTING\MODEL\CADD II\EFFLUENT\55867-S-3401.DWG
Plotted By: FLORES, CARROLL Plot Date: Monday, May 12, 2014

51921 :

GENERAL NOTES

1. IF THIS SHEET IS NOT 24"x36", THEN IT IS A REDUCED SIZE PLOT. USE GRAPHIC SCALE ACCORDINGLY.
2. ABBREVIATIONS & LEGEND ARE LOCATED ON SHEET C55864 S-0001. GENERAL STRUCTURAL NOTES ARE LOCATED ON SHEET C55864 S-0002.
3. FOR LAP SPLICES AND BASIC DEVELOPMENT LENGTHS OF REINFORCEMENT, SEE SCHEDULE ON S-7400.

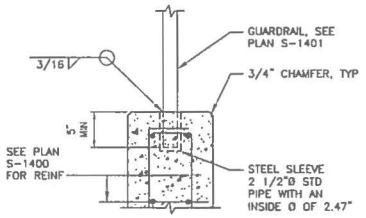

SECTION VIEW

1 S-1401 TYPICAL GUARDRAIL AT CONCRETE WALL

4" 0 8" 1'
1 1/2"=1'-0"

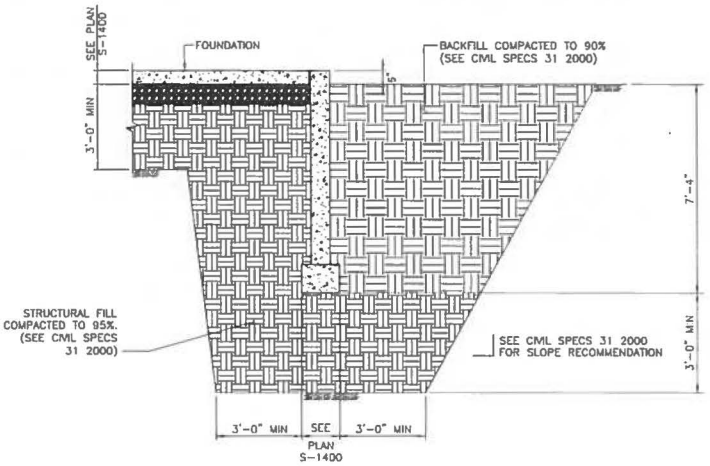

SECTION VIEW

2 S-1400, S-5410 TYPICAL GRADING AT RETAINING WALL

1' 6" 0 1' 2' 3'
1/2"=1'-0"

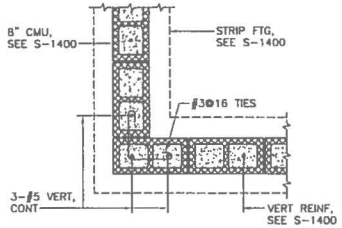

PLAN VIEW

3 S-1400 TYPICAL CMU CORNER

1' 9" 6" 3" 0 1'
1"=1'-0"

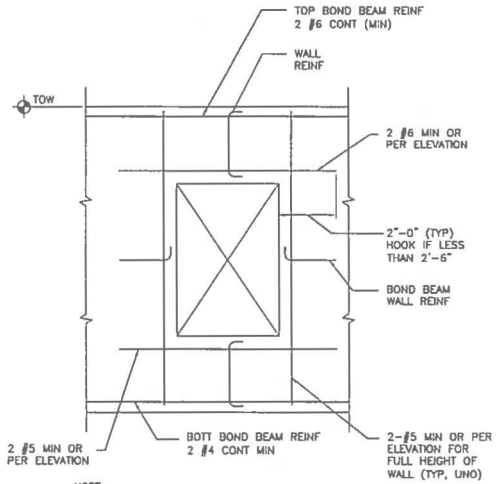

NOTE:
1. IF OPENING IS SMALL AND REINFORCING IS NOT INTERRUPTED NO ADDITIONAL REINFORCING IS REQUIRED.

ELEVATION VIEW

4 S-2401 TYPICAL CMU OPENING

2" 1" 0 1" 2"
1/2"=1"

JAMES M. WEEKS NEW MEXICO 11384 REGISTERED PROFESSIONAL ENGINEER
5/12/14

NO	DATE	CLASS REV	ADC	DESCRIPTION	DWN	DES	CHKD	SUB	APP

AECOM

RLWTF-UP LOW LEVEL WASTE SUBPROJECT

TYPICAL DETAILS

DRAWN	G.FLORES
DESIGN	C.GROSSMEIER
CHECKED	D.AKELROD
DATE	05-06-14

BLDG. 261 TA-50

SUBMITTED: MANNY TARIN
APPROVED FOR RELEASE: ED ARTIGLIA

Los Alamos NATIONAL LABORATORY PO Box 1663 Los Alamos, New Mexico 87545

SHEET S-5400
7 OF 69

CLASSIFICATION | REVIEWER | DATE

PROJECT ID 100761 | DRAWING NO C55867 | REV 0

91927
File Location: N:\ADE PROJECTS\LANL_RLVTF (LLW)\DRAFTING\MODEL\CAD\ (IN)\TFLUCHT\535867-S-5400.DWG
Plotted By: FLORES, GABRIEL Plot Date: Monday, May 12, 2014

GENERAL NOTES

1. IF THIS SHEET IS NOT 24"x36", THEN IT IS A REDUCED SIZE PLOT. USE GRAPHIC SCALE ACCORDINGLY.
2. ABBREVIATIONS & LEGEND ARE LOCATED ON SHEET C55864 S-0001. GENERAL STRUCTURAL NOTES ARE LOCATED ON SHEET C55864 S-0002.

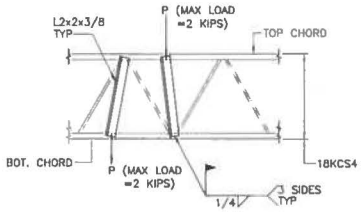

SIDE VIEW

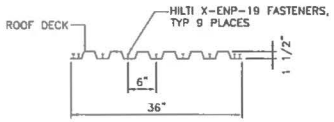

NOTE: SEE ICC ESR-2197

PATTERN 36/9

1 S-1401 TYPICAL JOIST LOADING

1" = 1'-0"

2 S-1401, S-5420 TYPICAL ROOF DECK FASTENER CONFIGURATION

1" = 1'-0"

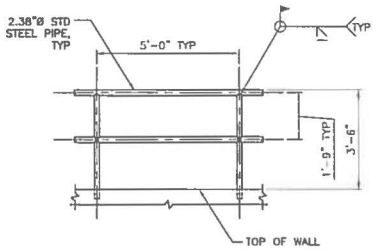

ELEVATION VIEW

NOTE:
GUARDRAIL SHALL BE IN CONFORMANCE WITH SPECIFICATION 05 5200.

3 S-1401 TYPICAL GUARDRAIL

1/2" = 1'-0"

NO	DATE	CLASS REV	ADC	DESCRIPTION	DWN	DES	CHKD	SUB	APP

AECOM

RLWTF-UP LOW LEVEL WASTE SUBPROJECT

TYPICAL DETAILS

DRAWN	G.FLORES
DESIGN	C.EISENBERGER
CHECKED	D.AXELROD
DATE	05-08-14

BLDG. 261 TA-50

SUBMITTED: MANNY TARIN

APPROVED FOR RELEASE: ED ARTIGLIA

Los Alamos NATIONAL LABORATORY PO Box 1663 Los Alamos, New Mexico 87545

SHEET: S-5401

8 OF 69

CLASSIFICATION | REVIEWER | DATE

PROJECT ID: 100761

DRAWING NO: C55867

REV: 0

JAMES M. WEEKS NEW MEXICO 11384 REGISTERED PROFESSIONAL ENGINEER

5/12/14

LT927
File: Layout Name: N:\ADE PROJECTS\LANL\LANL RLWTF LLW\DRAFTING\MODEL\CAD3 LLWTF\LIGHT\55867-S-5401.DWG
Plotted By: FLORES, DARRELL Plot Date: Monday, May 12, 2014

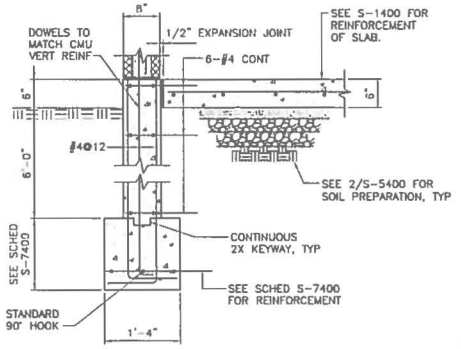

SECTION VIEW

1 S-1400 STEM WALL AT CMU

1" = 1'-0"

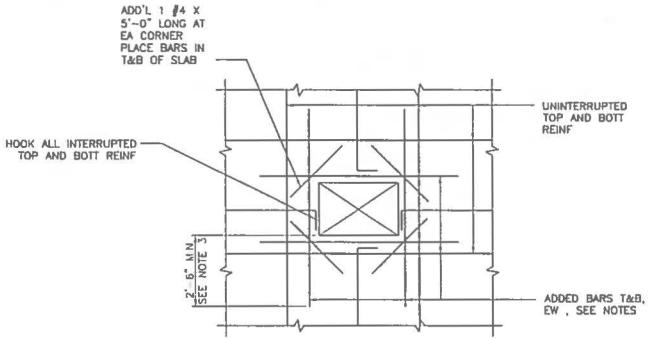

NOTES:
1. ALL T&B SLAB REINF INTERRUPTED BY AN OPENING SHALL BE COMPENSATED FOR WITH ADDITIONAL REINF EQUAL TO THAT INTERRUPTED. PLACE ADDITIONAL REINF EQUALLY ON EACH SIDE OF OPENING.
2. WHERE THE NUMBER OF BARS INTERRUPTED IS UNEVEN, THE NUMBER OF BARS ADDED SHALL BE THE NEXT HIGHEST EVEN NUMBER.
3. OR CLASS B DEVELOPMENT LENGTH PER S-7400.

PLAN VIEW

2 S-5410 TYPICAL REINFORCING @ OPENING IN SLAB

1/2" = 1'-0"

GENERAL NOTES

1. IF THIS SHEET IS NOT 24"x36", THEN IT IS A REDUCED SIZE PLOT. USE GRAPHIC SCALE ACCORDINGLY.
2. ABBREVIATIONS & LEGEND ARE LOCATED ON SHEET C55864 S-0001. GENERAL STRUCTURAL NOTES ARE LOCATED ON SHEET C55864 S-0002.
3. FOR LAP SPLICES AND BASIC DEVELOPMENT LENGTHS OF REINFORCEMENT, SEE SCHEDULE ON S-7400.

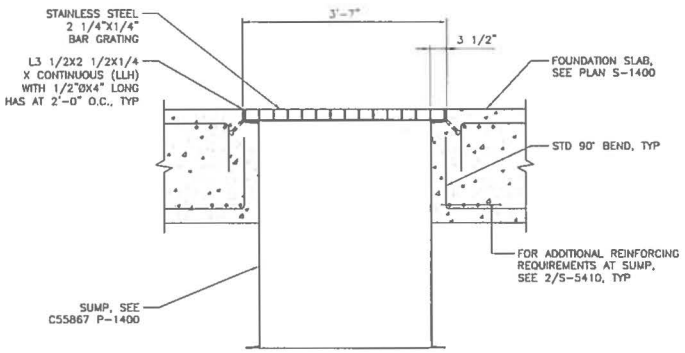

SECTION VIEW

3 S-1400 SUMP AT CONCRETE SLAB

1" = 1'-0"

JAMES M. WEAVER NEW MEXICO 11384 REGISTERED PROFESSIONAL ENGINEER

5/12/14

NO	DATE	CLASS REV	ADC	DESCRIPTION	DWN	DES	CHKD	SUB	APP

AECOM

RLWTF-UP LOW LEVEL WASTE SUBPROJECT

FOUNDATION DETAILS

DRAWN	G.FLORES	
DESIGN	C.ROSSMEISSER	
CHECKED	D.ARTILROD	
DATE	05-08-14	

BLDG. 261 TA-50

SUBMITTED MANNY TARIN

APPROVED FOR RELEASE ED ARTIGLIA

Los Alamos NATIONAL LABORATORY PO Box 1663 Los Alamos, New Mexico 87545

SHEET S-5410

9 OF 69

CLASSIFICATION REVIEWER DATE

PROJECT ID 100761

DRAWING NO C55867

REV 0

File: Locus Horn: T:\RDE PROJECTS\LAML\LAML RLWTF LLW\DRAFTING\MODELS\CAD 11\OTTLGEN1\535867-S-5410.DWG
Plotted By: FLORES, GABRIEL Plot Date: Monday, May 12, 2014

GENERAL NOTES

1. IF THIS SHEET IS NOT 24"x36", THEN IT IS A REDUCED SIZE PLOT. USE GRAPHIC SCALE ACCORDINGLY.
2. ABBREVIATIONS & LEGEND ARE LOCATED ON SHEET C55864 S-0001. GENERAL STRUCTURAL NOTES ARE LOCATED ON SHEET C55864 S-0002.
3. FOR LAP SPLICES AND BASIC DEVELOPMENT LENGTHS OF REINFORCEMENT, SEE SCHEDULE ON S-7400.

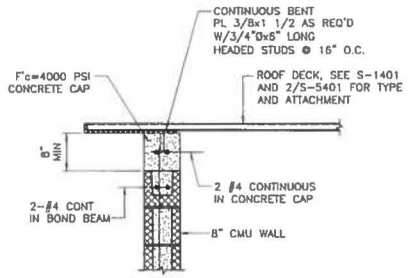

SECTION VIEW

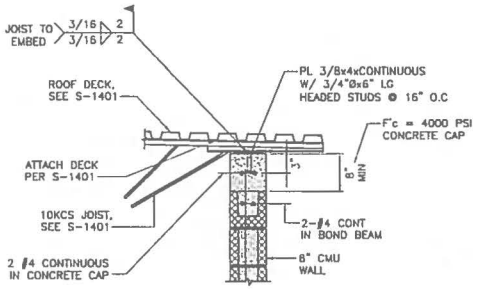

SECTION VIEW

1 S-1401 ROOF DECK AT CMU

, S-5420

1" 0" 6" 3" 0 1'
1"=1'-0"

2 S-1401 JOIST BEARING AT CMU

1" 0" 6" 3" 0 1'
1"=1'-0"

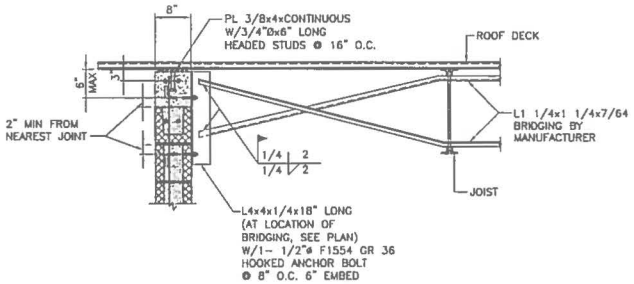

NOTE: FOR INFORMATION NOT SHOWN SEE DETAIL 1/S-5420.

SECTION VIEW

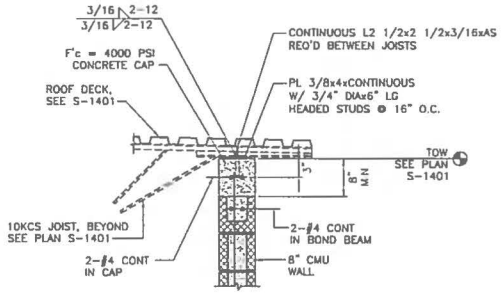

SECTION VIEW

3 S-1401 JOIST BRIDGING AT CMU

1" 0" 6" 3" 0 1'
1"=1'-0"

4 S-1401 DECK BEARING BETWEEN JOISTS

1" 0" 6" 3" 0 1'
1"=1'-0"

JAMES M. WEEKS
NEW MEXICO
11384
REGISTERED PROFESSIONAL ENGINEER
5/12/14

NO	DATE	CLASS REV	ADC	DESCRIPTION	DWN	DES	CHKD	SUB	APP

AECOM

RLWTF-UP LOW LEVEL WASTE SUBPROJECT

FRAMING DETAILS

DRAWN	G.FLORES		
DESIGN	C.ROSENBERGER		
CHECKED	D.AXELROD		
DATE	05-08-14		

BLDG. 261 TA-50

SUBMITTED: MANNY TARIN

APPROVED FOR RELEASE: ED ARTIOLIA

Los Alamos NATIONAL LABORATORY PO Box 1663 Los Alamos, New Mexico 87545

SHEET S-5420

10 OF 69

CLASSIFICATION | REVIEWER | DATE

PROJECT ID 100761 | DRAWING NO C55867 | REV 0

File: Lucia Horn P:\UDE PROJECTS\LANL\LANL RLWTF LLW\DRAFTING\MODEL\CAD LIVSFTL\DGN\S5867-S-5420.DVG
Plotted By: FLORES, GABRIEL Plot Date: Monday, May 12, 2014

C55867

PENETRATION SCHEDULE

* DISTANCES ARE TO CENTER OF PENETRATION UNLESS NOTES OTHERWISE.

	GENERAL LOCATION	PENETRATION SIZE	HORIZONTAL DISTANCE	COLUMN LINE REFERENCE	ELEVATION	SERVICE	COMMENT
SAMPLE BUILDING	NORTH WALL	1 1/4"Ø	1'-10"	WEST OF NORTHEAST CORNER	1'-6" ABOVE FF	ELEC	SLEEVED
		1 1/4"Ø	2'-0"	WEST OF NORTHEAST CORNER	8'-0" ABOVE FF	ELEC	SLEEVED
		1 1/4"Ø	7'-0"	EAST OF COL LINE 1	8'-0" ABOVE FF	ELEC	SLEEVED
		1 1/4"Ø	7'-6"	EAST OF COL LINE 1	8'-0" ABOVE FF	ELEC	SLEEVED
		2 1/2"Ø	8'-2"	EAST OF COL LINE 1	8'-0" ABOVE FF	ELEC	SLEEVED
		1 1/4"Ø	9'-4"	EAST OF COL LINE 1	8'-0" ABOVE FF	ELEC	SLEEVED
		1 1/4"Ø	9'-10"	EAST OF COL LINE 1	8'-0" ABOVE FF	ELEC	SLEEVED
		1 1/4"Ø	10'-4"	EAST OF COL LINE 1	8'-0" ABOVE FF	ELEC	SLEEVED
	WEST WALL	1 1/4"Ø	1'-10"	SOUTH OF COL LINE C	1'-6" ABOVE FF	ELEC	SLEEVED
		1 1/4"Ø	5'-0"	SOUTH OF NORTHWEST CORNER	8'-6" ABOVE FF	ELEC	SLEEVED
	EAST WALL	4"W X 4"H	4'-9"	SOUTH OF COL LINE C	6'-11" ABOVE FF	MECH	BLOCK OUT
		10"Ø	1'-6"	NORTH OF COL LINE B	3'-0" ABOVE FF	PROCESS	SLEEVED
		1 1/4"Ø	1'-10"	SOUTH OF COL LINE C	1'-6" ABOVE FF	ELEC	SLEEVED
		1 1/4"Ø	3'-0"	NORTH OF SOUTHWEST CORNER	4'-0" ABOVE FF	ELEC	SLEEVED
	SOUTH WALL	10"Ø	3'-9"	EAST OF COL LINE 1	0'-9" ABOVE FF	PROCESS	SLEEVED
EFFLUENT BASIN	NORTH WALL	14"Ø	8'-5"	WEST OF COL LINE 4	4'-0" ABOVE FF	PROCESS	SLEEVED
		10"Ø	3'-4"	EAST OF COL LINE 3	3'-2" ABOVE FF	PROCESS	SLEEVED
	WEST WALL	4"Ø	11'-3"	NORTH OF COL LINE A	7'-3" ABOVE FF	MECH	SLEEVED

FOUNDATION SCHEDULE

MARK	SIZE	DEPTH	TRANSVERSE REINFORCING	LONGITUDINAL REINFORCING	REMARKS
F1	1'-4" X CONT	1'-3"	#4 @ 12"O.C. BOTTOM	3 #4 BOTTOM	-

REINFORCING SPLICE AND EMBEDMENT SCHEDULE

BAR SIZE	EMBEDMENT & CLASS A SPLICE LENGTH	CLASS B SPLICE LENGTH	STD HOOK DEVELOPEMENT LENGTH
3	1'-7"	2'-1"	8"
4	2'-1"	2'-4"	10"
5	2'-7"	3'-5"	1'-0"
6	3'-1"	4'-1"	1'-3"
7	4'-6"	5'-11"	1'-5"
8	5'-2"	6'-4"	1'-7"
9	5'-10"	7'-7"	1'-10"
10	6'-7"	8'-6"	2'-1"

NOTES:
1. SPLICE LENGTHS ARE TYPICAL UNLESS OTHERWISE NOTED ON PLANS AND DETAILS.
2. SPLICES SHALL BE STAGGERED AT LEAST 24".
3. FOR HORIZONTAL BARS WITH LESS THAN 12" OF FRESH CONCRETE CAST BELOW THE SPLICE OR EMBEDMENT. LENGTHS MAY BE REDUCED BY 30% OF THAT SHOWN.
4. TABLE IS BASED ON f'c = 4,000 PSI.
5. SPLICES ARE CLASS A, EXCEPT WHERE NOTED ON DRAWINGS.
6. SPLICE LOCATIONS WHERE REQUIRED ARE INDICATED ON DETAILS. ADDITIONAL SPLICES AS NEEDED FOR MEANS AND METHODS OF CONSTRUCTION BY CONTRACTOR.

REINFORCING SPLICE AND EMBEDMENT SCHEDULE – MASONRY

CMU THICKNESS	BAR SIZE	F'm = 1900 PSI CENTER	F'm = 1900 PSI EDGE
8"	#3	18	18
	#4	24	24
	#5	30	35
	#6	49	66
	#7	72	90
	#8	117	135

NOTES:
1. ALL LENGTHS ARE IN INCHES.
2. WHERE 2 BARS PER CELL OCCUR THEY SHALL BE PLACED PER EDGE CONDITION.

JAMES M. WEAVER NEW MEXICO 11384 REGISTERED PROFESSIONAL ENGINEER
5/12/14

NO	DATE	CLASS REV	ADC	DESCRIPTION	DWN	DES	CHKD	SUB	APP

AECOM

RLWTF-UP LOW LEVEL WASTE SUBPROJECT

STRUCTURAL SCHEDULES

BLDG. 261 TA-50

SUBMITTED MANNY TARIN

APPROVED FOR RELEASE ED ARTIOLIA

Los Alamos NATIONAL LABORATORY PO Box 1663 Los Alamos, New Mexico 87545

DRAWN	G.FLORES
DESIGN	C.ROSSMEISSL
CHECKED	D.AXELROD
DATE	05-08-14

SHEET S-7400

11 OF 69

CLASSIFICATION | REVIEWER | DATE

PROJECT ID 100761 | DRAWING NO C55867 | REV 0

D2992 :
File Location: N:\RISE PROJECTS\LANL\LANL RLWTF LLW\LDRAFTING\MODELS\LEAD 1\EFFLUENT\353967-S-7400.DWG
Plotted By: FLORES, GABRIEL Plot Date: Monday, May 12, 2014

PROJECT DESIGN DATA

OCCUPANCY CLASSIFICATION — IBC 2009 NFPA-101 2009

LLW EFFLUENT STORAGE SAMPLING BUILDING ... F-1 GENERAL INDUSTRIAL ORDINARY HAZARD

CONSTRUCTION TYPE

261-LLW EFFLUENT STORAGE TANK ..... NA ..... NA
261-LLW EFFLUENT STORAGE SAMPLING BUILDING ... II-B 11 (000)

FLOOR AREA - ACTUAL VS ALLOWABLE

LLW EFFLUENT STORAGE SAMPLING BUILDING 261
GROSS AREA ..... 192 SF
BASE ALLOWABLE AREA ..... 14,500 SF

SPRINKLERS USED FOR 1 HR FIRE RESISTIVE CONSTRUCTION ..... NO

CORRIDOR RATINGS ..... UNRATED
SPRINKLER CORRIDOR RATING SUBSTITUTION NO
HAZARD CLASSIFICATION..... LESS THAN HAZ CAT 3
PERFORMANCE CATEGORY..... PC-1
SEISMIC CATEGORY..... SITE CLASS D

GENERAL NOTES

1. IF THIS SHEET IS NOT 24" X 36", THEN IT IS A REDUCED SIZE PLOT. USE GRAPHIC SCALE ACCORDINGLY.

NO	DATE	CLASS REV	ADC	DESCRIPTION	DWN	DES	CHKD	SUB	APP

AECOM

RLWTF-UP LOW LEVEL WASTE SUBPROJECT

PROJECT DESIGN DATA

BLDG. 261 TA-50

DRAWN	T. VLIET
DESIGN	T. LEACH
CHECKED	R. KASELOW
DATE	5/8/14

SUBMITTED MANNY TARIN

APPROVED FOR RELEASE ED ARTIGLIA

STATE OF NEW MEXICO Richard W. Kaselow 5-14-2014 NO. 2648 REGISTERED ARCHITECT

Los Alamos NATIONAL LABORATORY PO Box 1663 Los Alamos, New Mexico 87545

SHEET A-0401

12 OF 69

CLASSIFICATION REVIEWER DATE

PROJECT ID 100761 DRAWING NO C55867 REV 0

File Location: P:_TECHNOLOGY\60230831 - RLWTF\CAD CAD\502 CAD DIRECTORY\AECOM\EFFLUENT SAMPLE BUILDING\SHEET\55867-A-0401-R2.DWG
Plotted By: BROEMAN, DARLING Plot Date: Wednesday, May 07, 2014

12621

LEGEND (NOT ALL SYMBOLS WILL APPLY TO THIS PROJECT)

- 8'-0" — DIMENSION LINE WITH WITNESS LINES AND DIMENSION
- CENTER LINE
- LEADER LINE
- FUTURE CONSTRUCTION
- EXISTING CONSTRUCTION
- NEW CONSTRUCTION
- BACKGROUND, NEW CONST.
- HIDDEN LINE
- MATCH LINE
- EXISTING TO BE REMOVED
- 1 HOUR FIRE RATED WALL
- 2 HOUR FIRE RATED WALL

CODE PLAN SYMBOLS

IBC/NFPA101 TRAVEL DISTANCE TO COMMON PATH OF TRAVEL AND AN EXIT

PATH NUMBER — START POINT — END OF COMMON PATH OF TRAVEL — POINT OF EXIT

DOE-STD-1066 TRAVEL DISTANCE TO EXIT OR NON-RAD HVAC AIR ZONE

PATH NUMBER — START POINT — POINT OF EXIT

SECTION CUT — SECTION LETTER — SHEET NUMBER WHERE SECTION IS DRAWN — ARROWS INDICATE DIRECTION OF CUT

WHERE DETAIL IS A LARGER SCALE VIEW OF THE DRAWING SHOWN, (E.G., DETAIL OR ENLARGED PLAN) BUBBLE INDICATES ENLARGED AREA

DETAIL CALLOUT — DETAIL NUMBER — SHEET NUMBER WHERE DETAIL IS DRAWN

WHERE DETAIL IS AT 90° TO VIEW (E.G., A DETAIL SECTION VIEW), ARROW INDICATES DIRECTION OF CUT (NS)

INTERIOR ELEVATION CALLOUT — ELEVATION IDENTIFIER — FILLED AREA SHOWS DIRECTION — SHEET NUMBER WHERE ELEVATION IS DRAWN

NORTH ARROW — PLAN NORTH — TRUE NORTH

PLAN TITLES — PLANS — SCALE 1/4"=1'-0"

SECTION, DETAIL & INTERIOR ELEVATION TITLES — SECTION LETTER / DETAIL NUMBER / ELEVATION LETTER — SECTIONS – DETAILS — SHEET NO FROM WHICH DRAWING IS CALLED. — SCALE 1/4"=1'-0"

EXTERIOR ELEVATION TITLES — NORTH ELEVATION — SCALE 1/4"=1'-0"

- ROOM NAME & NUMBER — NAME 100
- DOOR NUMBER (NS) — 100
- WINDOW NUMBER — 100
- COLUMN LINE GRIDS — 1 / A
- KEYED NOTE — 1
- TOILET, SHOWER AND MISC. ACCESSORIES SPEC 10-2800 (NS) — W
- WALL TAG (SEE SHEET A-7101) — A
- HAND AND FOOT MONITOR (NS)
- PERSONNEL CONTAMINATION MONITOR (NS) — PCM
- HAMPERS (NS)
- ROOF DRAIN & OVERFLOW
- LIGHTS (DASHED SUSPENDED)
- EMERGENCY LIGHTS (DASHED SUSPENDED)
- HVAC DIFFUSER (NS) — SUPPLY / RETURN
- FIRE SPRINKLER HEAD (NS)
- SIDEWALL FIRE SPRINKLER HEAD (NS)
- BOLLARD (NS)
- FIRE EXTINGUISHER
- ELEVATION RELATIVE TO LOWER LEVEL FF=100'-0" — 100'-00"
- ELEVATION OF FLOOR TOPPING ABOVE DATUM — 1"
- SLOPE ARROW (POINTS DOWN,)
- FIRE FLOW DRAIN
- EXIT SIGN
- CONCRETE
- EARTH
- PRE-FINISHED METAL ROOF
- STAIR RUN (NS)

ABBREVIATIONS (NOT ALL SYMBOLS WILL APPLY TO THIS PROJECT)

ADA	AMERICANS WITH DISABILITIES ACT
ADMIN	ADMINISTRATION
AFF	ABOVE FINISHED FLOOR
BRD	BOARD
BLDG	BUILDING
BOT	BOTTOM
BS	BOTH SIDES
CL ℄	CENTERLINE
CLG	CEILING
CUB	CENTRAL UTILITY BUILDING
CHEM	CHEMICAL
CLR	CLEAR
CMU	CONCRETE MASONRY UNIT
COL	COLUMN
COMM	COMMUNICATIONS
CONC	CONCRETE
CONT	CONTINUOUS
DIA, ⌀	DIAMETER
DIM	DIMENSION
DN	DOWN
EA	EACH
EF	EACH FACE
EJ	EXPANSION JOINT
ELEC	ELECTRIC, ELECTRICAL
ELEV	ELEVATION
EQUIP	EQUIPMENT
EXP	EXPANSION
ES	EACH SIDE
EW	EACH WAY
EWC	ELECTRIC WATER COOLER
EXP	EXPANSION JOINT
FD	FLOOR DRAIN
FE	FIRE EXTINGUISHER
FEC	FIRE EXTINGUISHER CABINET
FF	FINISH FLOOR
FG	FINISH GRADE
FIN	FINISH
FOC	FACE OF CONCRETE
FOS	FACE OF STUD
FR	FRAME
FRG	FIRE RESISTIVE GLAZING (NOT WIRE)
GA	GAUGE
GB	GRAB BAR
GFE	GOVERNMENT FURNISHED EQUIPMENT
GYP BD	GYPSUM BOARD
HDWR, HW	HARDWARE
HFM	HAND AND FOOT MONITOR
HM	HOLLOW METAL
HORIZ	HORIZONTAL
HR	HOUR
HT	HEIGHT
HVAC	HEATING, VENTILATING AND AIR CONDITIONING
HW	HARDWARE
IBC	INTERNATIONAL BUILDING CODE (2009)
INSUL	INSULATION
JAN	JANITOR('S)
L	ANGLE
LAB	LABORATORY
LAV	LAVATORY
LSC	LIFE SAFETY CODE (NFPA-101, 2009)
MATL	MATERIAL
MAX	MAXIMUM
MECH	MECHANICAL
METL	METAL
MIN	MINIMUM, MINUTE
MISC	MISCELLANEOUS
MO	MASONRY OPENING
MTD	MOUNTED
NFPA	NATIONAL FIRE PROTECTION ASSOCIATION
NIC	NOT IN CONTRACT
NO/#	NUMBER
NOM	NOMINAL
NS	NON STANDARD
NTS	NOT TO SCALE
OC	ON CENTER
OD	OUTSIDE DIAMETER / OVERFLOW DRAIN
OH	OPPOSITE HAND
OHM	OCCUPATIONAL HEALTH MONITORING
OPS	OPERATIONS
PCM	PERSONNEL CONTAMINATION MONITOR, PERSONNEL CONTAMINATION MONITORING
PL	PLATE
PLAM	PLASTIC LAMINATE
PS	PULL STATION
R	RISER
RAD	RADIUS
RD	ROOF DRAIN
REINF	REINFORCING
REQD	REQUIRED
RM	ROOM
REQD	REQUIRED
RO	ROUGH OPENING
RWL	RAIN WATER LEADER
SC	SOLID CORE
SCHED	SCHEDULE
SIM	SIMILAR
STL	STEEL
SPEC	SPECIFICATION
SQ	SQUARE
SS	STAINLESS STEEL
STD	STANDARD
STOR	STORAGE
STRUC	STRUCTURE, STRUCTURAL
T	TREAD
THK	THICK, THICKNESS
TOC	TOP OF CONCRETE
TOS	TOP OF STEEL
TOW	TOP OF WALL
TRU	TRANSURANIC
TS	TUBE STEEL
TYP	TYPICAL
UON	UNLESS OTHERWISE NOTED
VERT	VERTICAL
W/	WITH
W/O	WITHOUT
WC	WATER CLOSET
WT	WEIGHT

LEGEND (CONTINUED)

- ACCESS PANEL
- CABLE TRAY
- CEILING GRID W/ SS PANELS @ PROCESS AREA

STATE OF NEW MEXICO — Richard W. Kaselow — 2-14-2014 — NO. 2648 — REGISTERED ARCHITECT

NO	DATE	CLASS REV	ADC	DESCRIPTION	DRN	DES	CHKD	SUB	APP

AECOM

RLWTF-UP LOW LEVEL WASTE SUBPROJECT

SYMBOL LEGEND AND ABBREVIATIONS

BLDG. 281 — TA-50

SUBMITTED: MANNY TARIN — APPROVED FOR RELEASE: ED ARTIOLIA

DRAWN: T. VLIET — DESIGN: T. LEACH — CHECKED: R. KASELOW — DATE: 5/8/14

Los Alamos NATIONAL LABORATORY — PO Box 1663, Los Alamos, New Mexico 87545

SHEET A-0402 — 13 OF 69

CLASSIFICATION — REVIEWER — DATE

PROJECT ID 100761 — DRAWING NO C55867 — REV 0

22921

File Location: P:_TECHNOLOGY\60230431 - RLWTF\300 CAD\302 CAD DIRECTORY\AECOM\STUDENT SAMPLE BUILDING\PLOTS\SHEET\55867-A-0402-BLDNG

Plotted By: BRICKMAN, DARLENE; Plot Date: Wednesday, May 07, 2014

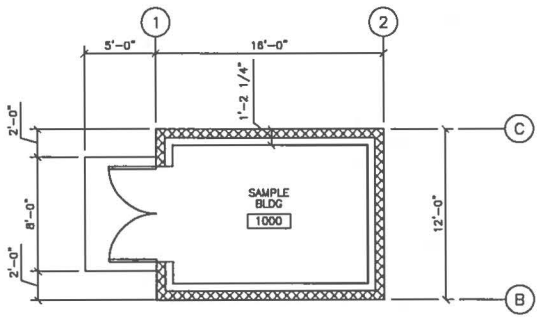

FLOOR PLAN OF RECORD

0' 1' 2' 4' 6' 8'
1/4"=1'-0"

GENERAL NOTES

1. IF THIS SHEET IS NOT 24" X 36", THEN IT IS A REDUCED SIZE PLOT. USE GRAPHIC SCALE ACCORDINGLY.
2. GROSS MEASURED AREA SHALL MEAN THE TOTAL AREA OF A BUILDING ENCLOSED BY THE DOMINANT PORTION, EXCLUDING PARKING AREAS AND LOADING DOCKS (OR PORTION OF SAME) OUTSIDE THE BUILDING. CALCULATED ON A FLOOR BY FLOOR BASIS.
3. GROSS BUILDING AREA SHALL MEAN THE TOTAL CONSTRUCTED AREA OF A BUILDING.

ROOM	ROOM NUMBER	ROOM AREA
TOTAL NET AREA	1000	139 SF
TOTAL GROSS BUILDING AREA		192 SF

"PRIORITY DRAWING"

NO	DATE	CLASS REV	ADC	DESCRIPTION	DRN	DES	CHKD	SUB	APP

AECOM

RLWTF-UP LOW LEVEL WASTE SUBPROJECT

FLOOR PLAN OF RECORD

BLDG. 261 TA-50

DRAWN T. VLIET
DESIGN T. LEACH
CHECKED R. KASELOW
DATE 5/8/14

SUBMITTED MANNY TARIN
APPROVED FOR RELEASE ED ARTIOLIA

Los Alamos NATIONAL LABORATORY PO Box 1663 Los Alamos, New Mexico 87545

SHEET A-1401
14 OF 69

CLASSIFICATION REVIEWER DATE

PROJECT ID 100761
DRAWING NO C55867
REV 0

STATE OF NEW MEXICO
Richard W. Kaselow
5-14-2014
NO. 2848
REGISTERED ARCHITECT

File Location: P:_TECHNOLOGY_ECS\25831 - RLWTF-UG3 CAD-UG3 CAD DIRECTORY\ACCOM\ATTLIGHT SAMPLE BUILDING\A\SHEET\C55867-A-1401-BLDNG
Plotted By: WICKHAM, DARLENE Plot Date: Wednesday, May 07, 2014

C55867

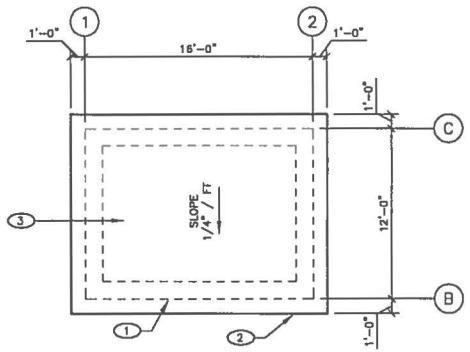

ROOF PLAN OF RECORD

0' 1' 2' 4' 6' 8'
1/4"=1'-0"

GENERAL NOTES

1. IF THIS SHEET IS NOT 24" X 36", THEN IT IS A REDUCED SIZE PLOT. USE GRAPHIC SCALE ACCORDINGLY.
2. GROSS MEASURED AREA SHALL MEAN THE TOTAL AREA OF A BUILDING ENCLOSED BY THE DOMINANT PORTION, EXCLUDING PARKING AREAS AND LOADING DOCKS (OR PORTION OF SAME) OUTSIDE THE BUILDING. CALCULATED ON A FLOOR BY FLOOR BASIS.

KEYED NOTES

(1) LINE OF WALL BELOW

(2) LINE OF ROOF OVERHANG

(3) SINGLE-PLY CHLOROSULFONATE-POLYETHYLENE (CSPE) ROOFING FULLY ADHERED

"PRIORITY DRAWING"

NO	DATE	CLASS REV	ADC	DESCRIPTION	DWN	DES	CHKD	SUB	APP

AECOM

RLWTF-UP LOW LEVEL WASTE SUBPROJECT

ROOF PLAN OF RECORD

BLDG. 261 TA-50

DRAWN	T. VIJET
DESIGN	T. LEACH
CHECKED	R. KASELOW
DATE	5/8/14

SUBMITTED MANNY TARIN

APPROVED FOR RELEASE ED ARTEAGA

STATE OF NEW MEXICO Richard W. Kaselow 5-14-2014 NO. 2648 REGISTERED ARCHITECT

Los Alamos NATIONAL LABORATORY PO Box 1663 Los Alamos, New Mexico 87545

SHEET A-1402

15 OF 69

CLASSIFICATION REVIEWER DATE

PROJECT ID 100761

DRAWING NO C55867

REV 0

File: L:\engineering\PVL_TECHNOLOGY\100761 - RLWTF\300 CAD\302 CAD DRAWINGS\CAD\UPTU\DSF SAMPLE BUILDING\A\SHEET\55867-A-1402-ROOF.dwg
Plotted by: BRODMAN, DARLENE Plot Date: Wednesday, May 07, 2014

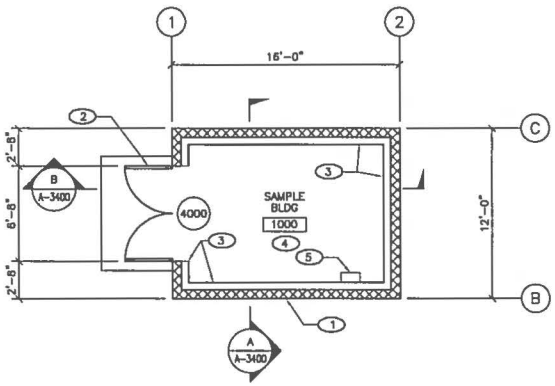

FLOOR PLAN

1/4"=1'-0"

GENERAL NOTES

1. IF THIS SHEET IS NOT 24" X 36", THEN IT IS A REDUCED SIZE PLOT. USE GRAPHIC SCALE ACCORDINGLY.

KEYED NOTES

1. 8" CMU BLOCK WALL WITH EXTERIOR SEALANT (TYPICAL)
2. HOLLOW METAL DOOR AND FRAME
3. 6" METAL STUD WALLS WITH 5/8" TYPE 'X' GYPSUM BOARD AND R-19 BATT INSULATION – TAPE, TEXTURE, PAINT
4. R-30 BATT INSULATION ON CEILING WITH 5/8" TYPE 'X' GYPSUM BOARD – TAPE, TEXTURE, PAINT
5. FIRE EXTINGUISHER

NO	DATE	CLASS REV	ADC	DESCRIPTION	DWN	DES	CHKD	SUB	APP

AECOM

RLWTF-UP LOW LEVEL WASTE SUBPROJECT

FLOOR PLAN

BLDG. 261 TA-50

DRAWN	T. VLIET
DESIGN	T. LEACH
CHECKED	R. KASELOW
DATE	5/8/14

SUBMITTED: MANNY TARIN

APPROVED FOR RELEASE: ED ARTIGLIA

Los Alamos NATIONAL LABORATORY PO Box 1663 Los Alamos, New Mexico 87545

SHEET A-1450

16 OF 69

CLASSIFICATION | REVIEWER | DATE

PROJECT ID 100761 | DRAWING NO C55867 | REV 0

STATE OF NEW MEXICO Richard W. Kaselow 5-14-2014 NO. 2648 REGISTERED ARCHITECT

File Location: P:_TECHNOLOGY\60239631 - RLWTF\500 CAD\502 CAD DIRECTORY\AECOM\EFFLUENT SAMPLE BUILDING\A\SHEET\55867-A-1450-RLDWG
Plotted By: BROOKMAN, DAVLING Plot Date: Wednesday, May 07, 2014

: 12625

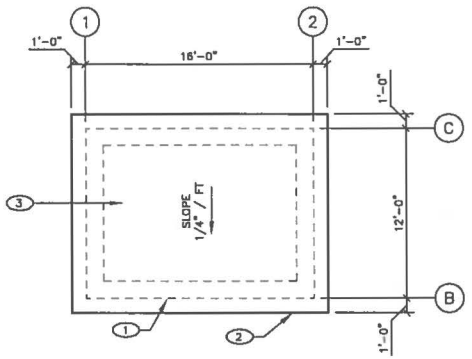

ROOF PLAN

0' 1' 2' 4' 8' 6'
1/4"=1'-0"

GENERAL NOTES

1. IF THIS SHEET IS NOT 24" X 36", THEN IT IS A REDUCED SIZE PLOT. USE GRAPHIC SCALE ACCORDINGLY.

KEYED NOTES

1. LINE OF WALL BELOW
2. LINE OF ROOF OVERHANG
3. SINGLE-PLY CHLOROSULFONATE-POLYETHYLENE (CSPE) ROOFING FULLY ADHERED

NO	DATE	CLASS REV	ADC	DESCRIPTION	DWN	DES	CHKD	SUB	APP

AECOM

RLWTF-UP LOW LEVEL WASTE SUBPROJECT

ROOF PLAN

BLDG. 261 TA-50

DRAWN	T. VLIET
DESIGN	T. LEACH
CHECKED	R. KASELOW
DATE	5/8/14

SUBMITTED: MANNY TARIN

APPROVED FOR RELEASE: ED ARTIGLIA

STATE OF NEW MEXICO
Richard W. Kaselow
5-14-2014
NO. 2648
REGISTERED ARCHITECT

Los Alamos NATIONAL LABORATORY
PO Box 1663
Los Alamos, New Mexico 87545

SHEET A-1451

17 OF 69

CLASSIFICATION | REVIEWER | DATE

PROJECT ID 100761

DRAWING NO C55867

REV 0

File Location: P:_TECHNOLOGY\60239631 - RLWTF\500 CAD\502 CAD DIRECTORY\AECOM\EFFLUENT SAMPLE BUILDING\A\SHEET\55867-A-1451-R0.DWG
Plotted By: BRIZEMAN, DARLENE; Plot Date: Wednesday, May 07, 2014

: 12626

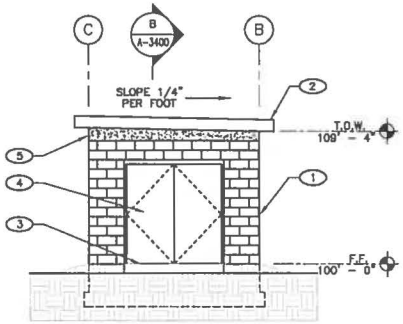

WEST ELEVATION

1/4"=1'-0"

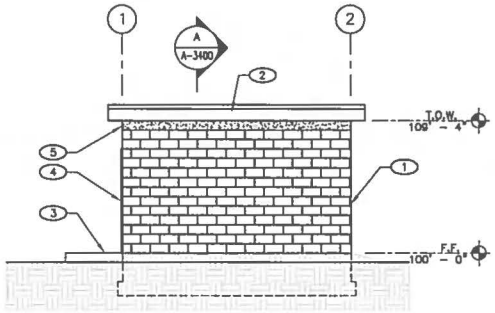

SOUTH ELEVATION

1/4"=1'-0"

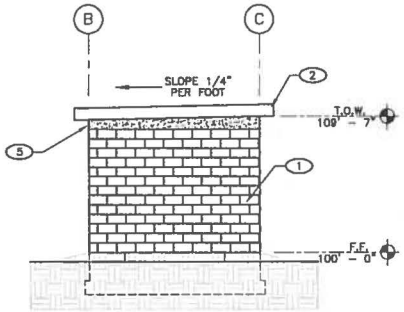

EAST ELEVATION

1/4"=1'-0"

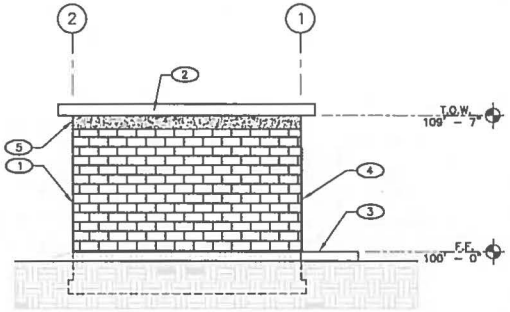

NORTH ELEVATION

1/4"=1'-0"

GENERAL NOTES

1. IF THIS SHEET IS NOT 24"x 36", THEN IT IS A REDUCED SIZE PLOT. USE GRAPHIC SCALE ACCORDINGLY.
2. PROVIDE AND INSTALL ALL SYSTEMS SHOWN UNLESS NOTED OTHERWISE.
3. 7,265.00' ABOVE MEAN SEA LEVEL (AMSL) = 100'-0" = 0.00'
4. PROVIDE TWO BUILDING STRUCTURE SIGNS PER SPECIFACTION SECTION 10 1405 AND ESM SETION B-C, G2040 2.3 COORDINATE WITH LANL FOR LOCATION.

KEYED NOTES

(1) 8" CMU BLOCK WALL WITH EXTERIOR SEALANT (TYPICAL)
(2) METAL FASCIA AND SOFFIT
(3) 4' X 8' CONCRETE FLATWORK
(4) HOLLOW METAL DOOR AND FRAME
(5) CONTINUOUS CONCRETE CAP – SEE STRUCTURAL S-5420

NO	DATE	CLASS REV	ADC	DESCRIPTION	DWN	DES	CHKD	SUB	APP

AECOM

RLWTF-UP LOW LEVEL WASTE SUBPROJECT

ELEVATIONS

DRAWN	T. VUET
DESIGN	T. LEACH
CHECKED	R. KASELOW
DATE	5/8/14

BLDG. 281 TA-50

SUBMITTED: MANNY TARIN

APPROVED FOR RELEASE: ED ARTIGLIA

Los Alamos NATIONAL LABORATORY PO Box 1663 Los Alamos, New Mexico 87545

SHEET A-2400

18 OF 69

CLASSIFICATION | REVISION | DATE

PROJECT ID 100761 | DRAWING NO C55867 | REV 0

STATE OF NEW MEXICO Richard W. Kaselow 5-14-2014 NO. 2648 REGISTERED ARCHITECT

12627

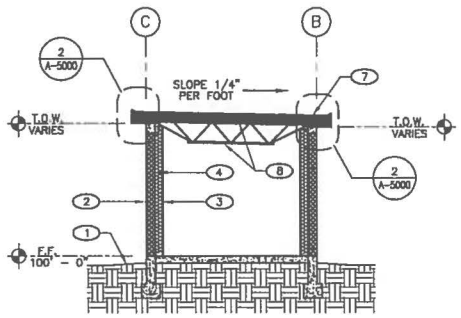

A A-1150 BUILDING SECTION

0' 1' 2' 4' 6' 8'
1/4"=1'-0"

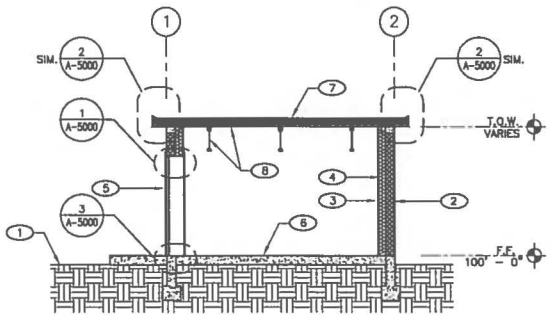

B A-1150 BUILDING SECTION

0' 1' 2' 4' 6' 8'
1/4"=1'-0"

GENERAL NOTES

1. IF THIS SHEET IS NOT 24"x 36", THEN IT IS A REDUCED SIZE PLOT. USE GRAPHIC SCALE ACCORDINGLY.
2. PROVIDE AND INSTALL ALL SYSTEMS SHOWN UNLESS NOTED OTHERWISE.

KEYED NOTES

1. FINISH GRADE
2. 8" CMU BLOCK WALL WITH EXTERIOR SEALANT (TYPICAL)
3. 6" METAL STUD WALL WITH 5/8" TYPE 'X' GYPSUM BOARD, TAPE, TEXTURE AND PAINT
4. R-19 BATT INSULATION
5. HOLLOW METAL DOOR AND FRAME – SEE DOOR SCHEDULE
6. CONCRETE FLOOR WITH SEALANT
7. SINGLE-PLY CHLOROSULFONATE-POLYETHYLENE (CSPE) ROOFING FULLY ADHERED TO 3/4" SUBSTRATE WITH 5" POLYISOCYANURANTE R-30
8. STEEL JOISTS AND ROOF DECK – SEE STRUCTURAL

NO	DATE	CLASS REV	ADC	DESCRIPTION	DWN	DES	CHKD	SUB	APP

AECOM

RLWTF-UP LOW LEVEL WASTE SUBPROJECT

BUILDING SECTIONS

BLDG. 261 TA-50

DRAWN	T. VLIET
DESIGN	T. LEACH
CHECKED	R. KASELOW
DATE	5/8/14

SUBMITTED: MANNY TARIN

APPROVED FOR RELEASE: ED ARTIOLIA

STATE OF NEW MEXICO
Richard W. Kaselow
5-14-2014
NO. 2648
REGISTERED ARCHITECT

Los Alamos NATIONAL LABORATORY
PO Box 1663
Los Alamos, New Mexico 87545

SHEET A-3400

19 OF 69

CLASSIFICATION | REVIEWER | DATE

PROJECT ID 100761 | DRAWING NO C55867 | REV 0

File Location: P:_TECHNOLOGY\60239831 - RLWTF\500 CAD\502 CAD DIRECTORY\AECOM\EFFLUENT SAMPLE BUILDING\A\SHEET\55867-A-3400-RD.DWG
Plotted By: BROOKMAN, DARLENE; Plot Date: Wednesday, May 07, 2014

: 12628

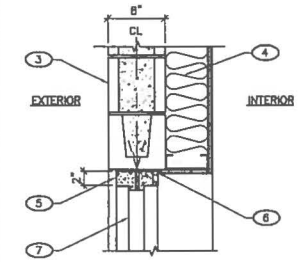

1 A-7000 1 A-3400 DOOR HEAD/JAMB (SIM)

4" 0 8" 1'
1 1/2"=1'-0"

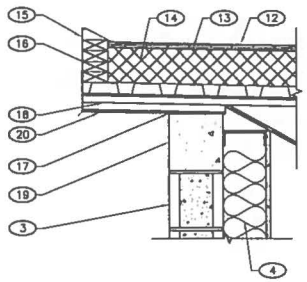

2 A-3400 ROOF DETAIL

4" 0 8" 1'
1 1/2"=1'-0"

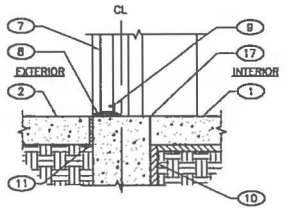

3 A-7000 3 A-3400 THRESHOLD

4" 0 8" 1'
1 1/2"=1'-0"

GENERAL NOTES

1. IF THIS SHEET IS NOT 24" X 36", THEN IT IS A REDUCED SIZE PLOT. USE GRAPHIC SCALE ACCORDINGLY.

KEYED NOTES

1. FLOOR FINISH – AS SCHEDULED
2. CONCRETE STOOP
3. CMU BLOCK WALL WITH EXTERIOR SEALANT – SEE STRUCTURAL S-3401
4. 6" METAL STUD WITH R-19 BATT INSULATION AND 5/8" TYPE 'X' GYPSUM BOARD, TAPE, TEXTURE AND PAINT
5. HOLLOW METAL DOOR FRAME WITH JAMB ANCHORS (FULL GROUT)
6. WOOD SHIM WITH SEALANT BOTH SIDES
7. INSULATED METAL DOOR
8. ADA COMPLIANT THRESHOLD
9. WEATHERSTRIPPING
10. 1" RIGID INSULATION AT PERIMETER
11. 1/2" EXPANSION JOINT
12. SINGLE-PLY CHLOROSULFONATE-POLYETHYLENE (CSPE) ROOFING FULLY ADHERED
13. 3/4" SUBSTRATE
14. 5" POLYISOCYANURATE RIGID INSULATION R-30
15. METAL ROOF EDGE AND FLASHING
16. WOOD BLOCKING
17. SEALANT
18. ROOF JOISTS AND ROOF DECK – SEE STRUCTURAL S-5420
19. CONTINUOUS CONCRETE CAP – SEE STRUCTURAL S-5420
20. METAL SOFFIT

NO	DATE	CLASS REV	ADC	DESCRIPTION	DWN	DES	CHKD	SUB	APP

AECOM

RLWTF-UP LOW LEVEL WASTE SUBPROJECT

DETAILS

BLDG. 261 TA-50

DRAWN	T. VLIET
DESIGN	T. LEACH
CHECKED	R. KASELOW
DATE	5/8/14

SUBMITTED MANNY TARIN

APPROVED FOR RELEASE ED ARTIGUA

STATE OF NEW MEXICO
Richard W. Kaselow
5-14-2014
NO. 2648
REGISTERED ARCHITECT

Los Alamos NATIONAL LABORATORY PO Box 1663 Los Alamos, New Mexico 87545

SHEET A-5400

20 OF 69

CLASSIFICATION | REVIEWER | DATE

PROJECT ID 100761 | DRAWING NO C55867 | REV 0

File Location: P:_TECHNOLOGY\60239831 – RLWTF\500 CAD\502 CAD DIRECTORY\AECOM\EFFLUENT SAMPLE BUILDING\A\SHEET\55867-A-5400-RLDWG
Plotted By: BROCKMAN, DARLENE; Plot Date: Wednesday, May 14, 2014

12629

ROOM FINISH SCHEDULE

ROOM		WALLS				FLOOR	CEILING	
NUMBER	NAME	N	S	E	W		MATL	HEIGHT
1000	SAMPLE BUILDING	GB|P	GB|P	GB|P	GB|P	C|C	GB|P	SLOPED

FINISH SCHEDULE LEGEND (NOT ALL FINISHES USED IN THIS BUILDING)	
C|C	CONCRETE PAINTED WITH INDUSTRIAL COATING
GB|P	PAINTED GYPSUM BOARD

GENERAL NOTES

1. IF THIS SHEET IS NOT 24" X 36", THEN IT IS A REDUCED SIZE PLOT. USE GRAPHIC SCALE ACCORDINGLY.

DOOR AND FRAME SCHEDULE

DOOR							FRAME							
MARK	SIZE			TYPE	MATL	GLAZING	TYPE	MATL	DETAIL			FIRE RATING LABEL	HARDWARE SET NO	NOTES
	WD	HGT	THK						HEAD	JAMB	THRESHOLD			
4000	6'-0"	7'-2"	1 7/8"	A	HM	N/A	1	HM	1/A-5000	1/A-5000	3/A-5000	N/A	2A	2-36" LEAVES

DOOR TYPE

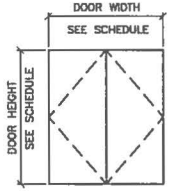

A

DOOR FRAME TYPE

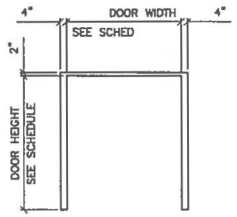

1

NO	DATE	CLASS REV	ADC	DESCRIPTION	DWN	DES	CHKD	SUB	APP

AECOM

RLWTF-UP LOW LEVEL WASTE SUBPROJECT

ROOM FINISH SCHEDULE
DOOR AND FRAME SCHEDULE

BLDG. 261 TA-50

DRAWN	T. VUET
DESIGN	T. LEACH
CHECKED	R. KASELOW
DATE	5/8/14

SUBMITTED MANNY TARIN

APPROVED FOR RELEASE ED ARTIGLIA

STATE OF NEW MEXICO
Richard W. Kaselow
5-14-2014
NO. 2648
REGISTERED ARCHITECT

Los Alamos NATIONAL LABORATORY PO Box 1663 Los Alamos, New Mexico 87545

SHEET A-7400

21 OF 69

CLASSIFICATION | REVIEWER | DATE

PROJECT ID 100761 | DRAWING NO C55867 | REV 0

File Location: P:_TECHNOLOGY\60239831 - RLWTF\500 CAD\502 CAD DIRECTORY\AECOM\EFFLUENT SAMPLE BUILDING\A\SHEET\55867-A-7400-R0.DWG
Plotted By: BRIEBMAN, DARLENE; Plot Date: Wednesday, May 07, 2014

: 12630

GENERAL NOTES

1. IF THIS SHEET IS NOT 24"X36", THEN IT IS A REDUCED SIZE PLOT. USE THE GRAPHIC SCALE ACCORDINGLY.
2. SECURE TANK BASE TO EMBED PLATES WITH 3/8" FILLET WELD IN ID OF 2" DIAMETER HOLES OF BASE.

KEYED NOTES

1. MATCH DRILL PUMP P-1503 BASE TO SUPPORT WELDED TO EMBED PLATE IN WALL.
2. FIELD VERIFY PUMP LOCATION PRIOR TO WELDING PUMP SUPPORT PLATE TO EMBEDED PLATE.

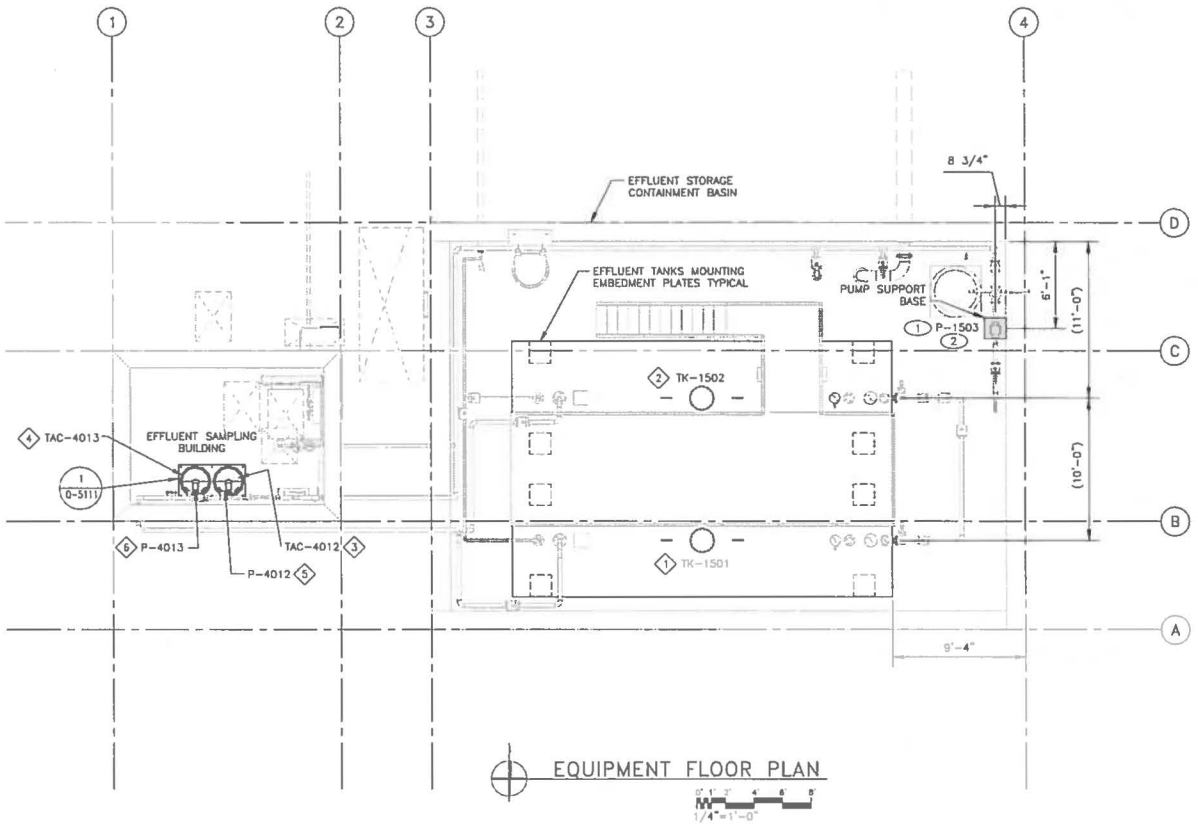

EQUIPMENT FLOOR PLAN

1/4"=1'-0"

NO	DATE	CLASS REV	ADC	DESCRIPTION	DWN	DES	CHKD	SUB	APP

AECOM

RLWTF-UP LOW LEVEL WASTE SUBPROJECT

EQUIPMENT FLOOR PLAN

BLDG. 261 TA-50

DRAWN	V DAVISON
DESIGN	S MOORE
CHECKED	C MOYERS
DATE	5/8/14

SUBMITTED MANNY TARIN

APPROVED FOR RELEASE ED ARTIGLIA

Los Alamos NATIONAL LABORATORY PO Box 1663 Los Alamos, New Mexico 87545

SHEET Q-1400

22 OF 69

CLASSIFICATION | REVIEWER | DATE

PROJECT ID 100761 | DRAWING NO C55867 | REV 0

CHARLES MOYERS NEW MEXICO 18838 LICENSED PROFESSIONAL ENGINEER

05-08-14

File Location: P:\RLWTF LOW-LEVEL WASTE FACILITY\500 CAD\C55867 EFFLUENT STORAGE TANKS\SHEETS\11 EQUIPMENT\55867-Q-1400-R0.DWG
Plotted By: DAVISON, VANESSA; Plot Date: Friday, May 02, 2014

12631

GENERAL NOTES

1. IF THIS SHEET IS NOT 24"X36", THEN IT IS A REDUCED SIZE PLOT. USE THE GRAPHIC SCALE ACCORDINGLY.

KEYED NOTES

(1) LOCATE PUMP BASE TO ALIGN PUMP WITH PIPING.

(2) COORDINATE LOCATION OF EMBEDMENT PLATES WITH EQUIPMENT VENDOR.

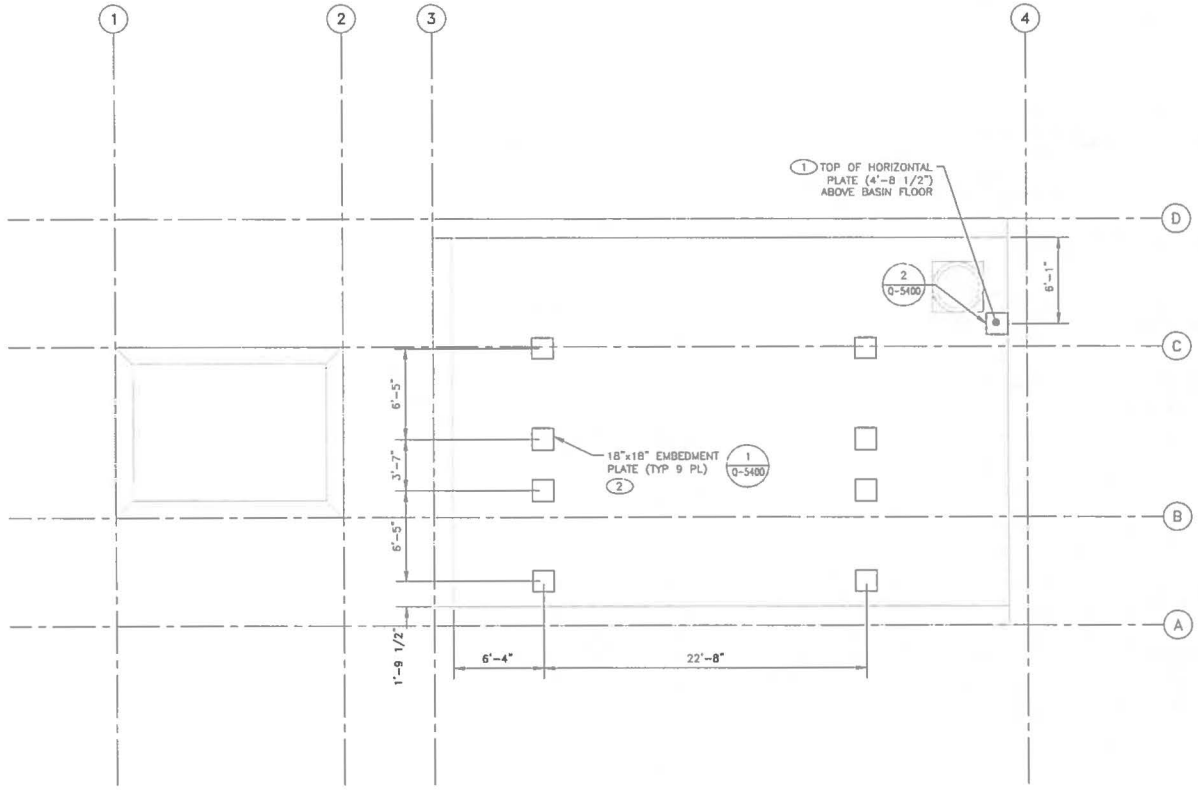

EMBEDMENT PLATE PLAN

1/4"=1'-0"

NO	DATE	CLASS REV	ADC	DESCRIPTION	OWN	DES	CHKD	SUB	APP

AECOM

RLWTF-UP LOW LEVEL WASTE SUBPROJECT

EMBEDMENT PLATE PLAN

BLDG. 261 TA-50

DRAWN	V DAVIDSON
DESIGN	R YOUNG
CHECKED	H MAI
DATE	5/8/14

SUBMITTED MANNY TARIN

APPROVED FOR RELEASE ED ARTIGLIA

Los Alamos NATIONAL LABORATORY PO Box 1663 Los Alamos, New Mexico 87545

SHEET	
Q-1401	
23	OF 69

CLASSIFICATION	REVIEWER	DATE

PROJECT ID	DRAWING NO	REV
100761	C55867	0

25927

File Location: P:\RLWTF LOW-LEVEL WASTE FACILITY\500 CAD\C55867 EFFLUENT STORAGE TANKS\SHEETS\11 EQUIPMENT\55867-Q-1401-R0.DWG
Plotted By: DAWSON, VANESSA; Plot Date: Friday, May 02, 2014

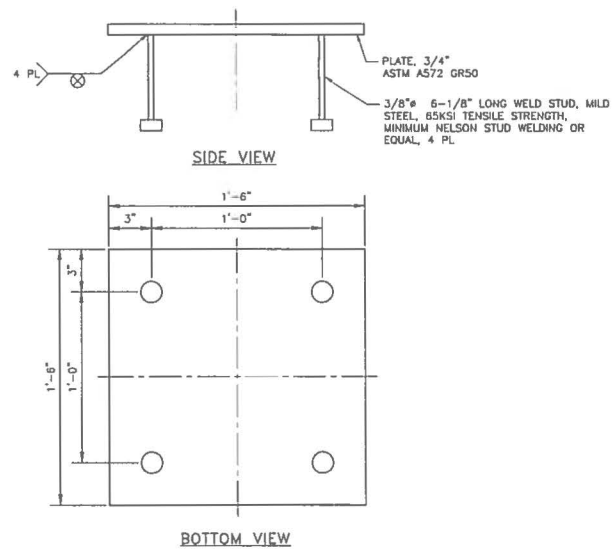

2 Q-5400 1 Q-1401 EMBED PLATE WELDMENT DETAIL
SCALE: NONE

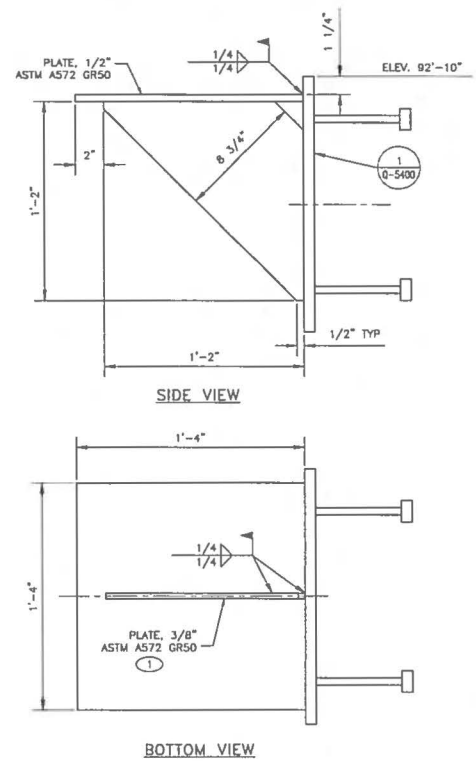

2 Q-1401 EMBED PLATE WELDMENT DETAIL
SCALE: NONE

KEYED NOTES

1 LOCATE GUSSET APPROXIMATELY CENTER UNDER PUMP

NO	DATE	CLASS REV	ADC	DESCRIPTION	DWN	DES	CHKD	SUB	APP

AECOM

RLWTF-UP LOW LEVEL WASTE SUBPROJECT

EMBEDMENT PLATE DETAILS

DRAWN	V DAVISON
DESIGN	R YOUNG
CHECKED	H MAI
DATE	5/6/14

BLDG. 261 TA-50

SUBMITTED MANNY TARIN

APPROVED FOR RELEASE ED ARTIGLIA

Los Alamos NATIONAL LABORATORY PO Box 1663 Los Alamos, New Mexico 87545

SHEET Q-5400

24 OF 69

CLASSIFICATION REVIEWER DATE

PROJECT ID 100761

DRAWING NO C55867

REV 0

File Location: P:\RLWTF LOW-LEVEL WASTE FACILITY\500 CAD\C55867 EFFLUENT STORAGE TANKS\SHEETS\11 EQUIPMENT\55867-Q-5400-R0.DWG
Plotted By: DAVISON, VANESSA Plot Date: Friday, May 02, 2014

: 126633

PROCESS EQUIPMENT LIST

ITEM NO.	LOCATION ROOM NO.	NO. REQUIRED	DESCRIPTION, MANUFACTURER OR APPROVED EQUAL — ALL EQUIPMENT SIZED FOR OPERATION AT 7500 FT. ELEVATION							FURNISHED BY
◇1 TK-1501	EFFLUENT STORAGE CONTAINMENT	1	CAPACITY 10,000 GALLONS	DIAMETER 96"	LENGTH 320"		CONFIGURATION HORIZONTAL	MATERIAL CARBON STEEL WITH COATING		SUBCONTRACTOR
◇2 TK-1502	EFFLUENT STORAGE CONTAINMENT	1	CAPACITY 10,000 GALLONS	DIAMETER 96"	LENGTH 320"		CONFIGURATION HORIZONTAL	MATERIAL CARBON STEEL WITH COATING		SUBCONTRACTOR
◇3 TAC-4012 (2)	EFFLUENT SAMPLE BUILDING	1	CAPACITY 50 GALLONS	DIAMETER 1'-10"	HEIGHT 2'-8 1/2"		BOTTOM CONFIGURATION FLAT	MATERIAL HDPE		SUBCONTRACTOR
◇4 TAC-4013 (2)	EFFLUENT SAMPLE BUILDING	1	CAPACITY 50 GALLONS	DIAMETER 1'-10"	HEIGHT 2'-8 1/2"		BOTTOM CONFIGURATION FLAT	MATERIAL HDPE		SUBCONTRACTOR
◇5 P-4012	EFFLUENT SAMPLE BUILDING	1	PUMP TYPE METERING	PUMPING RATE 1.6 GPM	INPUT POWER 18 WATTS	ELECTRICAL 120/1/60	MANUFACTURER NEPTUNE	MODEL NUMBER PZ-12-FTC	MATERIAL PVC (1)	SUBCONTRACTOR
◇6 P-4013	EFFLUENT SAMPLE BUILDING	1	PUMP TYPE METERING	PUMPING RATE 1.6 GPM	INPUT POWER 18 WATTS	ELECTRICAL 120/1/60	MANUFACTURER NEPTUNE	MODEL NUMBER PZ-12-VEC	MATERIAL PVDF (1)	SUBCONTRACTOR
◇7 P-1503	EFFLUENT STORAGE CONTAINMENT	1	PUMP TYPE CENTRIFUGAL	PUMPING RATE 100 GPM @ 12'	INPUT POWER 1 HP	ELECTRICAL 460/3/60	MANUFACTURER GRUNDFOS	MODEL NUMBER CRN-15-1	MATERIAL STAINLESS STEEL	SUBCONTRACTOR

KEYED NOTES

(1) MATERIAL IS FOR PUMP HEAD. SEE NEPTUNE BULLETIN P2-08 FOR COMPLETE MATERIALS.

(2) CHEMICAL HAZARD RATINGS:

CHEMICAL HAZARD RATING

ITEM NO.	CHEMICAL HAZARD	NFPA RATINGS				HAZARD	IBC MAQ (TOTAL CUMULATIVE AMOUNT PER CLASS)
		HEALTH	FIRE	REACTIVITY	PERSONAL PROTECTION		
◇3 TAC-4012	H_2SO_4	3	0	2	NA	CORROSIVE TOXIC	1000 GAL CORROSIVE 1000 GAL TOXIC
◇4 TAC-4013	NaOH	2	0	0	NA	CORROSIVE TOXIC	1000 GAL CORROSIVE 1000 GAL TOXIC

IBC – INTERNATIONAL BUILDING CODE
MAQ – MAXIMUM ALLOWABLE QUANTITY

NO	DATE	CLASS REV	ADC	DESCRIPTION	DWN	DES	CHKD	SUB	APP

AECOM

RLWTF-UP LOW LEVEL WASTE SUBPROJECT

EQUIPMENT SCHEDULE

BLDG. 261 TA-50

DRAWN V DAWSON
DESIGN S MOORE
CHECKED C MOYERS
DATE 5/8/14

SUBMITTED MANNY TARIN
APPROVED FOR RELEASE ED ARTIGLIA

Los Alamos NATIONAL LABORATORY PO Box 1663 Los Alamos, New Mexico 87545

SHEET Q-7400
25 OF 69

CLASSIFICATION REVIEWER DATE

PROJECT ID 100761
DRAWING NO C55867
REV 0

CHARLES MOYERS NEW MEXICO 16838 REGISTERED PROFESSIONAL ENGINEER 05-07-14

File Location: P:\RLWTF LOW-LEVEL WASTE FACILITY\300 CAD\C55867 EFFLUENT STORAGE TANKS\SHEETS\11 EQUIPMENT\55867-Q-7400-R0.DWG
Plotted By: DAWSON, VANESSA; Plot Date: Friday, May 02, 2014

DRAFT

PLUMBING SYMBOLS LEGEND

(ALL ABBREVIATIONS SHOWN ARE NOT NECESSARILY USED ON THE DRAWINGS)

ABBREVIATIONS

AC	AIR CONDITIONING	IE	INVERT ELEVATION
AD	ACCESS DOOR	IN	INCHES
AFF	ABOVE FINISHED FLOOR	IRI	INDUSTRIAL RISK INSURERS
AFG	ABOVE FINISHED GRADE		
AHU	AIR HANDLING UNIT	KW	KILOWATT
AL	ACOUSTIC LINING	KWH	KILOWATT HOUR
AOV	AIR OPERATED VALVE		
AOBV	AIR OPERATED BALL VALVE	LLW	LOW LEVEL WASTE
AR	ARGON	LO	LOCK OPEN
		LX	LABORATORY EXHAUST AIR
BDD	BACK DRAFT DAMPER		
BHP	HORSEPOWER	MA	MIXED AIR
BMCS	BUILDING MANAGEMENT CONTROL SYSTEM	MOBV	MOTOR OPERATED BALL VALVE
BOD	BOTTOM OF DUCT	NA	NOT APPLICABLE
BOP	BOTTOM OF PIPE BRAKE	NC	NORMALLY CLOSED
BP	BUILDING PRESSURE	NIC	NOT IN CONTRACT
BTUH	BTU PER HOUR	NO	NORMALLY OPEN
CAM	CONTINUOUS AIR MONITOR	OA	OUTSIDE AIR
CFH	CUBIC FEET PER HOUR	OBD	OPPOSED BLADE DAMPER
CFM	CUBIC FEET PER MINUTE	OHM	OCCUPATIONAL HEALTH MONITORING
CIE	CONTRACTOR INSTALLED EQUIPMENT		
CO	CLEANOUT	PCM	PROGRAMMABLE CONTROL MODULE; PERSONNEL CONTAMINATION MONITORING
CONT	CONTINUATION		
CPVC	CHLORINATED POLYVINYL CHLORIDE	PIP	PIPE IN PIPE
CS	CARBON STEEL	PL	PLACES
CU	COPPER	PLC	PROGRAMMABLE LOGIC CONTROLLER
D	DRAIN	POC	POINT OF CONNECTION TO EXISTING
DCO	DOUBLE CLEANOUT		
DECON	DECONTAMINATION	POR	POINT OF REMOVAL FROM EXISTING
DEMO	DEMOLITION, DEMOLISH		
DX	DIRECT EXPANSION	PRV	PRESSURE REDUCING VALVE
		PRV	PRESSURE RELIEF VALVE
EP	ELECTRIC-PNEUMATIC	PSIG	POUNDS PER SQUARE INCH GAGE
ENT	ENTERING		
EXH	EXHAUST	PVC	POLYVINYL CHLORIDE
°F	DEGREES FAHRENHEIT	QTY	QUANTITY
FAS	FIXED HEAD AIR SAMPLER		
FC	FLEXIBLE CONNECTOR, FAIL CLOSED	RA	RETURN AIR
		RD	ROOF DRAIN
FD	FLOOR DRAIN	RDOF	ROOF DRAIN OVERFLOW
FDMPR	FIRE DAMPER	RLA	RELIEF AIR
F.G.	FILTER GAUGE	RO	REVERSE OSMOSIS
FLEX	FLEXIBLE	RPM	REVOLUTIONS PER MINUTE
FM	FACTORY MUTUAL		
FMS	FACILITY MANAGEMENT SYSTEM	SA	SUPPLY AIR
		SHRV	SHOWER VALVE
FO	FAIL OPEN	SIM	SIMILAR
FPM	FEET PER MINUTE	SMFC	STRUCTURAL METAL FRAMING CHANNEL
FS	FLOOR SINK		
FT.	FEET	SOV	SOLENOID OPERATED VALVE
FT	FLAT TOP	SP	STATIC PRESSURE (INCHES OF WATER)
FV	FLOW VENTURI		
		SST	STAINLESS STEEL TUBING
GFE	GOVERNMENT FURNISHED EQUIPMENT	TOC	TOP OF CONCRETE
GIE	GOVERNMENT INSTALLED EQUIPMENT	TP	TRAP PRIMER
		TX	TOILET EXHAUST
GPH	GALLONS PER HOUR	TYP	TYPICAL
GPM	GALLONS PER MINUTE		
		UL	UNDERWRITERS LABORATORIES
HD	HEAD, HUB DRAIN		
HEPA	HIGH EFFICIENCY PARTICULATE AIR	V	VALVE
		VAC	VOLTS, ALTERNATING CURRENT
HFM	HAND AND FOOT MONITOR	VAV	VALVE, CHECK
HGT	HEIGHT	VC	VARIABLE AIR VOLUME
HOA	HAND-OFF-AUTOMATIC	VD	VOLUME DAMPER
HORIZ	HORIZONTAL	VEL	VELOCITY
HP	HORSEPOWER	VTR	VENT THRU ROOF
HSTAT	HUMIDISTAT	VX	VACUUM EXHAUST
HTG	HEATING		
HTR	HEATER	WC	WATER COLUMN
HVAC	HEATING, VENTILATING AND AIR CONDITIONING	WCO	WALL CLEAN OUT
		WHA	WATER HAMMER ARRESTOR
HW	HOT WATER		
HX	HEPA EXHAUST AIR		
HYD	HYDRANT		
HZ	HERTZ		

EQUIPMENT CODE LISTING

AFTERCOOLER
ACL AFTER COOLER

AIR DRYER
DAD
DAR REFRIGERANT AIR DRYER

AIR WASHER
WA AIR WASHER

BACKFLOW PREVENTER
BFP BACKFLOW PREVENTER

EQUIPMENT CODE LISTING (CONT.)

BOILERS
BHW HOT WATER BOILER (HEATING)
BS STEAM BOILER (HEATING)
BWS HOT WATER SUPPLY BOILER (POTABLE/NOT-POTABLE)

CHILLERS
CWA ABSORPTION WATER CHILLER
CWR REFRIGERANT WATER CHILLER

COMPRESSORS
CA AIR COMPRESSOR
CR REFRIGERANT COMPRESSOR

DEHUMIDIFIER
DHM DEHUMIDIFIER

FANS
FE EXHAUST AIR FAN
FRA RETURN AIR FAN
FS SUPPLY AIR FAN

FILTERS (AIR)
FAB REPLACEMENT AIR FILTER (6" DEEP AND LARGER)
FAC CLEANABLE AIR FILTER (PERMANENT TYPE)
FAH HEPA FILTER
FAL CARBON/CHARCOAL AIR FILTER
FAP EVAPORATIVE COOLER PAD
FAR REPLACEMENT AIR FILTER (UP TO 4" DEEP)
FES ELECTROSTATIC AIR FILTER

HEATERS (UNIT/SPACE WITH FANS)
HUG GAS HEATER
HUE ELECTRIC HEATER
HUI RADIANT (INFRARED) HEATER
HUS STEAM HEATER
HUW HOT WATER HEATER

HEAT EXCHANGERS
HXG HEAT EXCHANGER, WATER/GLYCOL TO AIR
HXO HEAT EXCHANGER, OIL TO WATER
HXS HEAT EXCHANGER, STEAM TO WATER
HXW HEAT EXCHANGER, WATER TO WATER

HUMIDIFIERS
HAS AIR HUMIDIFIER, STEAM SPRAY
HAW AIR HUMIDIFIER, WATER SPRAY

HVAC UNITS
ACR REFRIGERANT AIR CONDITIONING UNIT (DX COOLING ONLY)
CAE EVAPORATIVE AIR COOLER
CAW CHILLED WATER AIR CONDITIONING UNIT (COOLING ONLY)
HV HEATING AND VENTILATING UNIT
HVA HEATING, VENTILATING, AND AIR CONDITIONING UNIT

PUMPS
PA ACID PUMP (CAUSTIC, CHEMICAL, ETC.)
PBF BOILER FEED PUMP
PC CONDENSATE PUMP (ALL TYPES)
PCT COOLING TOWER PUMP
PCW CHILLED WATER PUMP
PDH HOT WATER PUMP (POTABLE)
PDW DEIONIZED WATER PUMP
PHW HOT WATER HEATING PUMP
PF FIRE PUMP
PPB PRESSURE BOOSTER PUMP
PS SUMP PUMP (REGARDLESS OF USE)
PSR RAW SEWAGE PUMP
PV VACUUM PUMP
PWS WATER SPRAY PUMP
PWT WASTE TREATMENT PUMP

TANKS
TAC TANK ACID OR CHEMICAL
TCA COMPRESSED AIR TANK
THW HOT WATER STORAGE TANK
TK TANK
TO FUEL OIL TANK
TX EXPANSION TANK

WATER HEATERS
HWE ELECTRIC WATER HEATER
HWG GAS WATER HEATER

WATER PRESSURE REGULATORS
RPW WATER PRESSURE REGULATOR

PIPING SYMBOLS

SYMBOL	DESCRIPTION
DRAINS	
RD	ROOF DRAIN
D	DRAIN
RDOF	ROOF DRAIN OVERFLOW
FD	FIRE WATER DRAIN
AIR/GAS	
CA	COMPRESSED AIR
NG	NATURAL GAS
N2	NITROGEN
SG	SPECIALTY GAS
AR	ARGON GAS
P-10	P-10 GAS
VAC	VACUUM
STEAM/CONDENSATE	
CONHP	CONDENSATE-HIGH PRESSURE (ABOVE 15 PSIG)
CONLP	CONDENSATE-LOW PRESSURE (15 PSIG OR LESS)
CONPMP	CONDENSATE-PUMPED
STMHP	STEAM-HIGH PRESSURE (ABOVE 15 PSIG)
STMLP	STEAM-LOW PRESSURE (15 PSIG OR LESS)
WASTE/VENT	
SW	SANITARY WASTE
SWV	SANITARY WASTE VENT
SWTE	SANITARY WASTEWATER TREATED EFFLUENT
VTR	VENT THROUGH ROOF
WATER	
DIWR	DEIONIZED WATER RETURN
DIWS	DEIONIZED WATER SUPPLY
DIWD	DEIONIZED WATER DRAIN
NPWC	NON-POTABLE WATER-COLD
NPWH	NON-POTABLE WATER-HOT
NPWMU	NON-POTABLE WATER-MAKEUP
PWC	POTABLE WATER-COLD
PWHS	POTABLE WATER-HOT SUPPLY
PWHR	POTABLE WATER-HOT RECIRCULATION
RO	REVERSE OSMOSIS WATER

MATERIAL/CLASSIFICATION

CS – CARBON STEEL
CU – COPPER
HDPE – HIGH DENSITY POLYETHYLENE
PVC – POLYVINYL CHLORIDE

LINE LABELING LEGEND

PWC–100–CS–2"
- PWC – LINE TYPE
- 100 – LINE NUMBER
- CS – MATERIAL/CLASSIFICATION
- 2" – LINE SIZE

GENERAL NOTES

1. COORDINATE ALL PLUMBING, PIPING AND EQUIPMENT WITH STRUCTURAL, MECHANICAL, FIRE PROTECTION, AND ELECTRICAL SYSTEMS AND PROVIDE NECESSARY OFFSETS TO AVOID CONFLICTS AND TO MAINTAIN EQUIPMENT ACCESS AND SERVICEABILITY.
2. FURNISH ALL NECESSARY STRUCTURES, INSERTS, SLEEVES AND HANGING DEVICES FOR INSTALLATION OF PLUMBING EQUIPMENT AND PIPING, ETC.
3. PROVIDE ALL NECESSARY MISCELLANEOUS ANGLES, CHANNELS, UNISTRUT AND SUPPORT AS REQUIRED TO ADEQUATELY SUPPORT THE PLUMBING PIPING, AND EQUIPMENT IN A MANNER APPROVED BY THE CONTRACT ADMINISTRATOR AND DOES NOT OVERLOAD THE BUILDING STRUCTURAL SYSTEM.
4. PROVIDE 2 FT. X 4 FT. CLEARANCE BELOW ALL HORIZONTALLY SUSPENDED PLUMBING ITEMS REQUIRING MAINTENANCE.
5. ALL DISCIPLINES (ELECTRICAL, FIRE PROTECTION, PIPING, PLUMBING, SHEET METAL) WILL COORDINATE INSTALLATION OF THEIR DISCIPLINE SO AS NOT TO INHIBIT ACCESS TO EQUIPMENT REQUIRING MAINTENANCE.
6. ALL STRUCTURAL WELDED CONNECTIONS SHALL BE PERFORMED IN ACCORDANCE WITH LANL APPROVED WELDING SPECIFICATION OR AWS D1.1/D1.1M SPECIFICATION FOR WELDING STEEL. ALL TUBULAR CONNECTIONS SHALL BE INSPECTED PER AWS D1.1 TABLE 6.1. ALL NON-TUBULAR COMPONENTS SHALL BE INSPECTED AS CYCLICALLY LOADED NON-TUBULAR CONNECTIONS PER AWS D1.1 TABLE 6.1. ALL PIPE WELDED CONNECTIONS SHALL BE PERFORMED IN ACCORDANCE WITH LANL APPROVED WELDING SPECIFICATION OR THE APPLICABLE ASME PRESSURE PIPING CODE IDENTIFIED IN THE CONSTRUCTION SPECIFICATION.
7. DETAILS WITH MISSING WELD INFORMATION (FOR EXAMPLE, SIZE OR NUMBER OF PLACES) SHALL BE PROVIDED ON FABRICATION DRAWINGS FOR APPROVAL PRIOR TO FABRICATION.

EQUIPMENT SYMBOLS

(ALL SYMBOLS SHOWN ARE NOT NECESSARILY USED ON THE DRAWINGS)

- P-3 — DIAMOND SYMBOL INDICATES EQUIPMENT/FIXTURE; NUMBER REFERS TO SPECIFIC EQUIPMENT IDENTIFIED IN PLUMBING SCHEDULE
- 1 — ELLIPSE SYMBOL INDICATES A KEYED NOTE; THE NUMBER REFERS TO A SPECIFIC NOTE LISTED IN THE KEYED NOTE LIST
- 1 — CIRCLE SYMBOL INDICATES UL LISTED FIRESTOP MATERIALS; THE NUMBER REFERS TO A SPECIFIC NOTE LISTED IN EACH FIRESTOPPING DETAIL
- POC — POINT OF CONNECTION BETWEEN CURRENT WORK AND EXISTING
- POR — POINT OF REMOVAL BETWEEN CURRENT WORK AND EXISTING
- EXISTING EQUIPMENT TO BE REMOVED
- EXISTING EQUIPMENT TO REMAIN
- UNDERFLOOR/UNDERGROUND PIPING

NO	DATE	CLASS REV	ADC	DESCRIPTION	DWN	DES	CHKD	SUB	APP

AECOM

RLWTF–UP LOW LEVEL WASTE SUBPROJECT

SYMBOL LEGEND, ABBREVIATIONS AND GENERAL NOTES

BLDG. 261 TA-50

DRAWN	V DAWSON
DESIGN	B SHREEVE
CHECKED	C MOYERS
DATE	3/6/14

SUBMITTED: MANNY TARIN — APPROVED FOR RELEASE: ED ARTIOLA

Los Alamos NATIONAL LABORATORY — PO Box 1663, Los Alamos, New Mexico 87545

SHEET P-0401 — 26 OF 69

CLASSIFICATION | REVIEWER | DATE

PROJECT ID 100761 | DRAWING NO C55867 | REV 0

CHARLES MOYERS — NEW MEXICO — 15839 — REGISTERED PROFESSIONAL ENGINEER — 05-07-14

C55867 : 1265

File Location: P:\RLWTF LOW-LEVEL WASTE FACILITY\500 CAD\C55867 EFFLUENT STORAGE TANKS\SHEETS\13 PLUMBING\55867-P-0401-R0.DWG
Plotted By: DAWSON, WARREN Plot Date: Friday, May 02, 2014

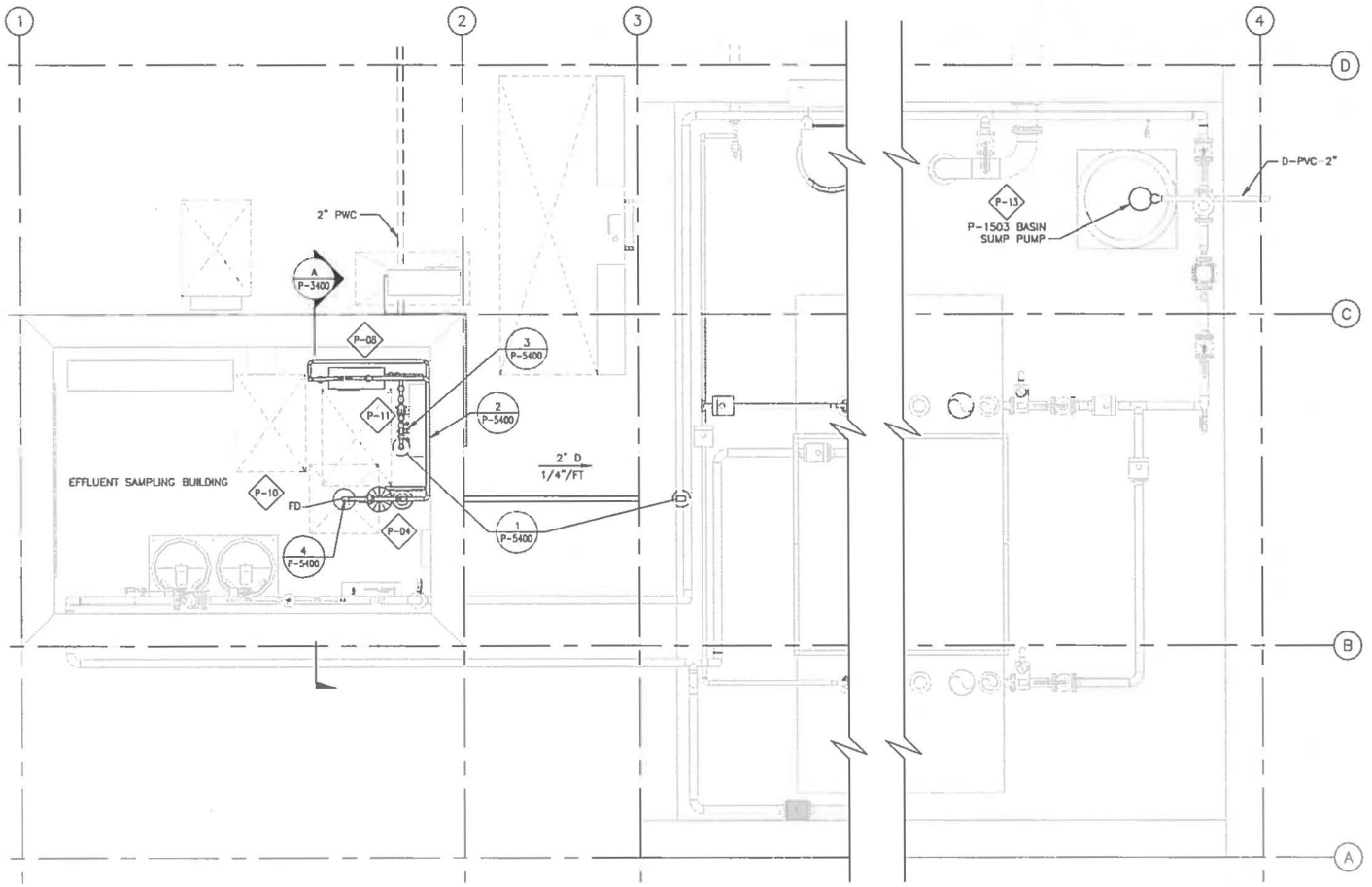

PLUMBING PLAN

1/2"=1'-0"

GENERAL NOTES

1. IF THIS SHEET IS NOT 24"X36", THEN IT IS A REDUCED SIZE PLOT. USE THE GRAPHIC SCALE ACCORDINGLY.
2. SEE SHEET P-7400 FOR PLUMBING EQUIPMENT LIST.

NO	DATE	CLASS REV	ADC	DESCRIPTION	DWN	DES	CHKD	SUB	APP

AECOM

RLWTF-UP LOW LEVEL WASTE SUBPROJECT

PLUMBING PLAN

DRAWN	V DAVISON
DESIGN	B SHREEVE
CHECKED	C MOYERS
DATE	5/6/14

BLDG. 261 TA-50

SUBMITTED: MANNY TARIN

APPROVED FOR RELEASE: ED ARTIGLIA

Los Alamos NATIONAL LABORATORY PO Box 1663 Los Alamos, New Mexico 87545

SHEET P-1400

27 OF 69

CLASSIFICATION | REVIEWER | DATE

PROJECT ID 100761 | DRAWING NO C55867 | REV 0

CHARLES MOYERS NEW MEXICO 10938 LICENSED PROFESSIONAL ENGINEER 05-07-14

File Location: P:\RLWTF LOW-LEVEL WASTE FACILITY\500 CAD\C55867 EFFLUENT STORAGE TANKS\SHEETS\13 PLUMBING\55867-P-1400-R0.DWG
Plotted By: DAVISON, VANESSA; Plot Date: Friday, May 02, 2014

98921

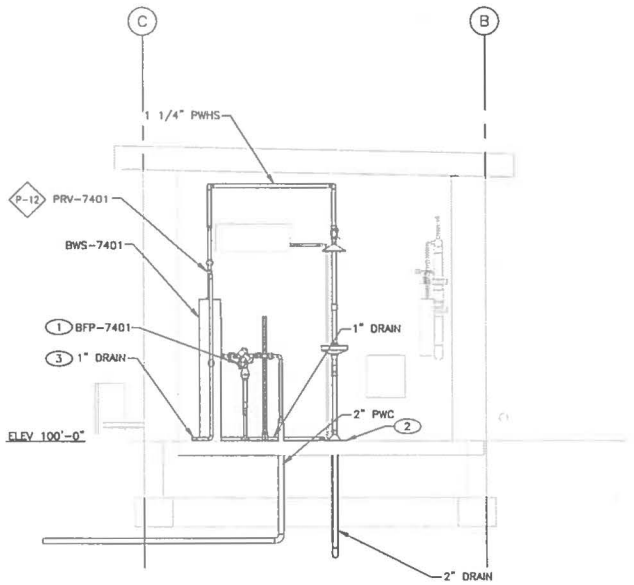

A P-1400 PLUMBING SECTION – EAST

1/2"=1'-0"

GENERAL NOTES

1. IF THIS SHEET IS NOT 24"X36", THEN IT IS A REDUCED SIZE PLOT. USE THE GRAPHIC SCALE ACCORDINGLY.
2. ELEVATION 100'-0" CORRESPONDS TO MEAN SEA LEVEL ELEVATION OF 7265.00 FEET.
3. SEE SHEET P-7400 FOR PLUMBING EQUIPMENT LIST.

KEYED NOTES

(1) FIELD ROUTE AND SUPPORT ø1" OR LESS PWC TO CONNECTION POINT ON VENDOR PROVIDED EQUIPMENT AS REQUIRED.

(2) PAINT A 30" X 30" LOCATION ON FLOOR CENTERED UNDER SAFETY SHOWERHEAD. PAINT FLOOR OR GRATING SAFETY GREEN WITH ALTERNATING 6" WIDE WHITE DIAGONAL STRIPES.

(3) ROUTE DRAIN WITH MIN 1/4" PER FOOT SLOPE DOWN TOWARD FLOOR DRAIN.

NO	DATE	CLASS REV	ADC	DESCRIPTION	DWN	DES	CHKD	SUB	APP

AECOM

RLWTF-UP LOW LEVEL WASTE SUBPROJECT

PLUMBING SECTION

DRAWN	V DAWSON
DESIGN	B SHREEVE
CHECKED	C MOYERS
DATE	5/8/14

BLDG. 261 TA-50

SUBMITTED MANNY TARIN

APPROVED FOR RELEASE ED ARTIGLIA

Los Alamos NATIONAL LABORATORY PO Box 1663 Los Alamos, New Mexico 87545

SHEET P-3400

28 OF 69

CLASSIFICATION REVIEWER DATE

PROJECT ID 100761 DRAWING NO C55867 REV 0

05-07-14

File Location: P:\RLWTF LOW-LEVEL WASTE FACILITY\500 CAD\C55867 EFFLUENT STORAGE TANKS\SHEETS\13 PLUMBING\55867-P-3400-R0.DWG
Plotted By: DAWSON, VANESSA Plot Date: Friday, May 02, 2014

12637

MECHANICAL SEAL TABLE			
NOMINAL PIPE SIZE	NOMINAL SLEEVE SIZE	METRASEAL MODEL NO.	REMARKS
2"	4"	6MS-300ES	SLEEVE SCHEDULE 40 STEEL PIPE

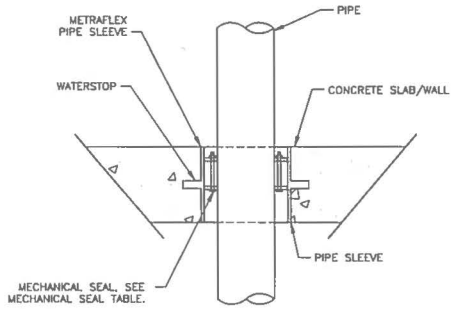

SECTION VIEW

1 P-1400 FLOOR/WALL PENETRATION DETAIL
SCALE: NONE

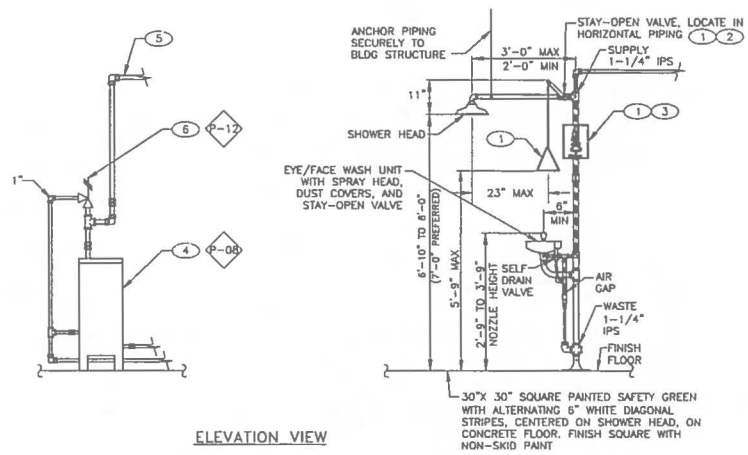

ELEVATION VIEW

2 P-1400 SAFETY SHOWER W/EYEWASH DETAIL
SCALE: NONE

KEYED NOTES:

1. FURNISHED WITH EMERGENCY EQUIPMENT.
2. VALVE TO BE ACCESSIBLE FOR MAINTENANCE.
3. EMERGENCY SIGN(S).
4. ELECTRIC SAFETY SHOWER TEPID WATER HEATER.
5. TEPID WATER SUPPLY.
6. TEMPERATURE AND PRESSURE RELIEF VALVE.
7. FIELD ROUTE AND ANCHOR HORIZONTAL PIPING.

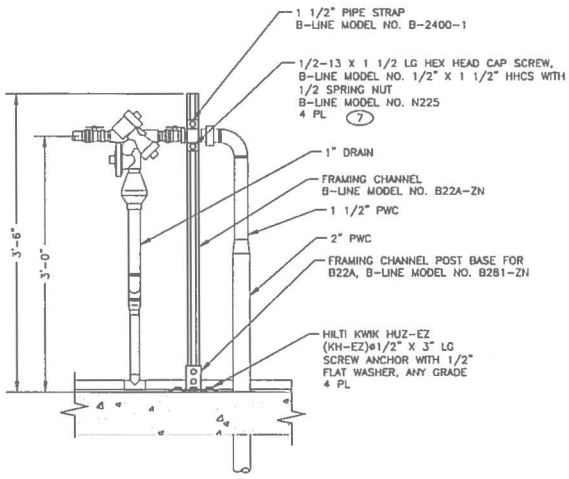

ELEVATION VIEW

3 P-1400 PIPE SUPPORT DETAIL
SCALE: NONE

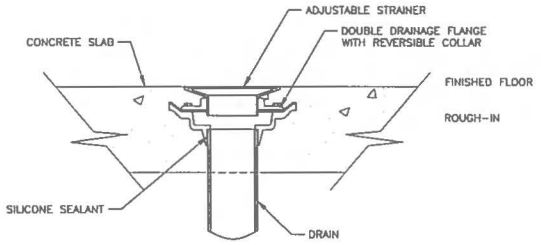

SECTION VIEW

4 P-1400 FLOOR DRAIN DETAIL
SCALE: NONE

NO	DATE	CLASS REV	ADC	DESCRIPTION	DWN	DES	CHKD	SUB	APP

AECOM

RLWTF-UP LOW LEVEL WASTE SUBPROJECT

DETAIL

BLDG. 261 TA-50

DRAWN	V DAVISON
DESIGN	B SHREEVE
CHECKED	C MOYERS
DATE	5/6/14

SUBMITTED: MANNY TARIN
APPROVED FOR RELEASE: ED ARTIGLIA

Los Alamos NATIONAL LABORATORY PO Box 1663 Los Alamos, New Mexico 87545

SHEET P-5400
29 OF 69

CLASSIFICATION | REVIEWER | DATE

PROJECT ID 100761 | DRAWING NO C55867 | REV 0

CHARLES MOYERS NEW MEXICO 18638 LICENSED PROFESSIONAL ENGINEER
05-08-14

File Location: P:\RLWTF LOW-LEVEL WASTE FACILITY\500 CAD\C55867 EFFLUENT STORAGE TANKS\SHEETS\13 PLUMBING\55867-P-5400-R0.DWG
Plotted By: DAVISON, VANESSA; Plot Date: Friday, May 02, 2014

12638

GENERAL NOTES

1. SEE SHEET P-0401 FOR GENERAL PLUMBING NOTES, LEGEND AND ABBREVIATIONS.
2. ALL PIPING, BOTH INDOOR AND OUTDOOR SHALL BE INSULATED IN ACCORDANCE WITH SPECIFICATION SECTION 22 0713.

KEYED NOTES

(1) ROUTE TO FLOOR DRAIN.
(2) SHEET FROM BUILDING 230, DRAWING C55864-F-6101.
(3) ISOLATION VALVE LOCATED AT TIE IN LOCATION.
(4) MALE CAMELOC CONNECTOR WITH CAP.
(5) ELECTRICAL FREEZE PROTECTION FOR PUMP AND SUMP.

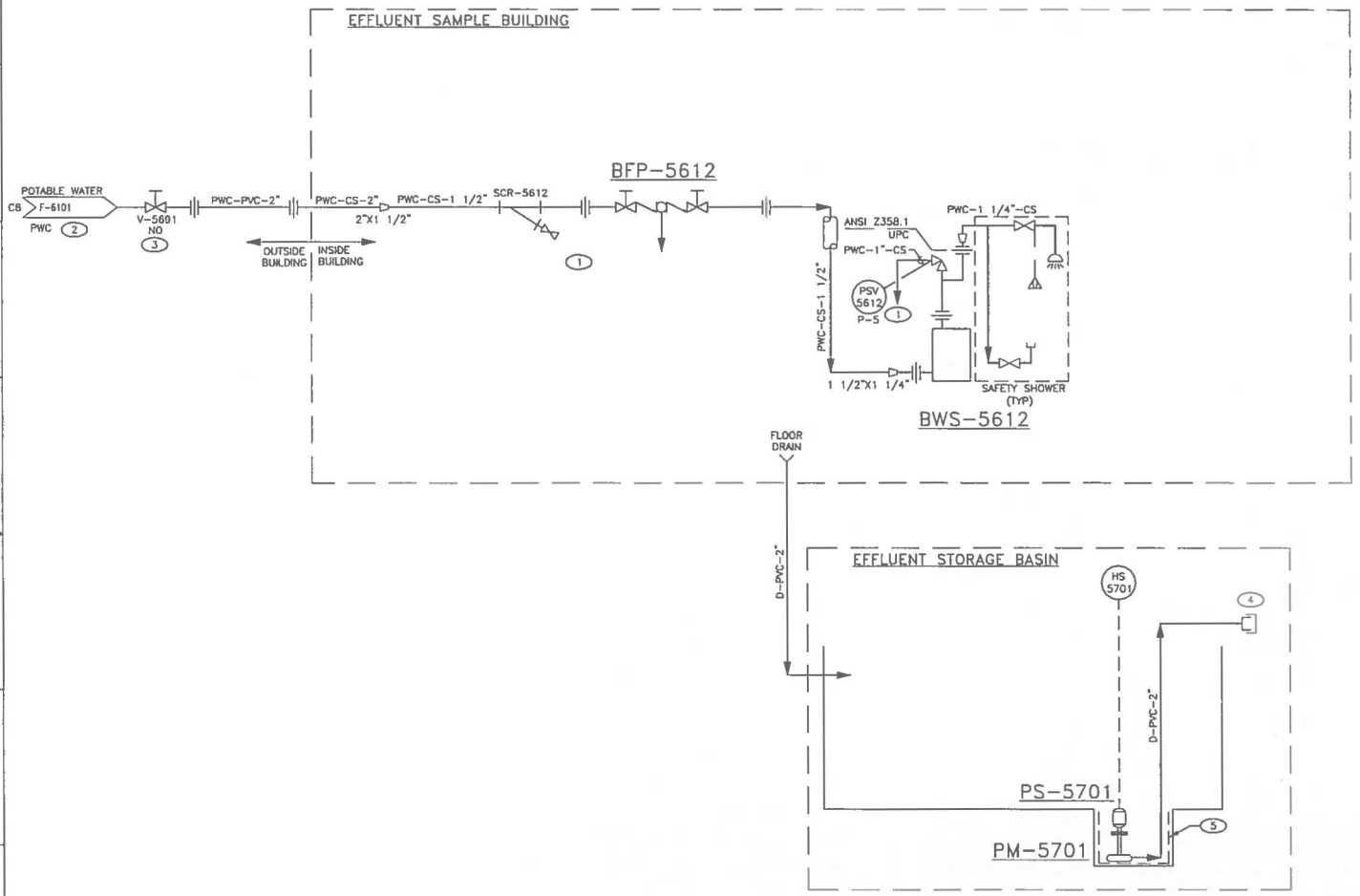

EFFLUENT STORAGE AREA P&ID
SCALE: NONE

"PRIORITY DRAWING"

NO	DATE	CLASS REV	ADC	DESCRIPTION	DWN	DES	CHKD	SUB	APP

AECOM

RLWTF-UP LOW LEVEL WASTE SUBPROJECT

PLUMBING P&ID

DRAWN: V DAVISON
DESIGN: B SHREEVE
CHECKED: C MOYERS
DATE: 5/8/14

BLDG. 261 TA-50

SUBMITTED: MANNY TARIN
APPROVED FOR RELEASE: ED ARTIGLIA

Los Alamos NATIONAL LABORATORY
PO Box 1663 Los Alamos, New Mexico 87545

SHEET: P-6400
30 OF 69

CLASSIFICATION | REVIEWER | DATE

PROJECT ID: 100761
DRAWING NO: C55867
REV: 0

CHARLES MOYERS NEW MEXICO 16538 REGISTERED PROFESSIONAL ENGINEER
05-07-14

File Location: P:\RLWTF LOW-LEVEL WASTE FACILITY\500 CAD\C55867 EFFLUENT STORAGE TANKS\SHEETS\13 PLUMBING\C55867-P-6400-R0.DWG
Plotted By: SHEEDA, WAYDA; Plot Date: Friday, May 02, 2014

PLUMBING FIXTURE/EQUIPMENT LIST

ITEM NO.	LOCATION ROOM NO.	NO. REQUIRED	SYMBOL	DESCRIPTION	ROUGH-IN-SIZE					REMARKS	FURNISHED BY
					WASTE	VENT	PWC	NPWC	PWHS		
P-04	SAMPLE BUILDING	1	P-04	SAFETY SHOWER/EYEWASH UNIT	–	–	–	–	1-1/4"	PER ANSI Z358.1; FREE STANDING, 8 INCH DIAMETER SHOWER HEAD; EYEWASH, TWIN SPRAY HEADS; TEMPERATE WATER BLENDING, 1-1/4 INCH IPS CONNECTIONS. (SEE SPECIFICATION SECTION 22 4200)	SUBCONTRACTOR
P-08	SAMPLE BUILDING	1	P-08	ELECTRIC WATER HEATER FOR SAFETY SHOWERS	–	–	1"	–	–	PER UL 499 AND ANSI Z358.1; CONNECTIONS, ASME B1.20.1 PIPE THREAD, PRESSURE RATING 150 PSIG, FLOW RANGE: 20 – 30 GPM, WATER DELIVERY TEMPERATURE RANGE 60 – 90 DEG F, POWER DEMAND 63 KILOWATTS, VOLTS 480, PHASES THREE, HERTZ 60, AMPS 65. (SEE SPECIFICATION SECTION 22 3700)	SUBCONTRACTOR
P-10	SAMPLE BUILDING	1	P-10	FLOOR DRAIN	2"	–	–	–	–	ASME A112.6.3, 2 IN. DIAMETER DRAIN, CAST-IRON GRATE, DOUBLE-DRAINAGE FLANGE, REVERSIBLE-CLAMPING COLLAR, ADJUSTABLE NICKEL-BRONZE STRAINER (SEE SPECIFICATION SECTION 22 1316)	SUBCONTRACTOR
P-11	SAMPLE BUILDING	1	P-11	BACKFLOW PREVENTER	–	–	1 1/2"	–	–	BRONZE BODY WITH BALL-TYPE SHUTOFF VALVES, FEMALE NATIONAL PIPE THREAD; 125 PSI WORKING PRESSURE. (SEE SPECIFICATION SECTION 22 1100)	SUBCONTRACTOR
P-12	SAMPLE BUILDING	1	P-12	TEMPERATURE AND PRESSURE RELIEF VALVE, (PSV-7401)							SUBCONTRACTOR

UNIT NO	MANUFACTURER	MODEL	FLUID	CONNECTION	INLET SIZE	OUTLET SIZE	PRESSURE SETTING	CAPACITY	TEMPERATURE SETTING
PRV-7401	WATTS	LF40XL-7	WATER	MNPT X FNPT	1"	1"	75 PSIG	500,000 BTU/HR	210°F

P-13 — EFFLUENT STORAGE BASIN — 1 — P-13 — SUBCONTRACTOR

SYMBOL NO. 13. PS-5701 EFFLUENT STORAGE BASIN SUMP PUMP

UNIT NO.	MANUFACTURER	PUMP SERIES	PUMP SIZE	FLOW (GPM)	FLUID	MOTOR HP	AMPS	V\HZ\PH	MOTOR RPM
PS-5701	ZOELLER PUMP CO	N282	2"	64 GAL @ 15' HEAD	100% WATER	.50	10.3	115\60\1	1750

NO	DATE	CLASS REV	ADC	DESCRIPTION	DWN	DES	CHKD	EUS	APP

AECOM

RLWTF-UP LOW LEVEL WASTE SUBPROJECT

PLUMBING EQUIPMENT LIST

BLDG. 281 TA-50

DRAWN V DAWSON

DESIGN B SHREEVE

CHECKED C MOYERS

DATE 5/8/14

SUBMITTED MANNY TARIN

APPROVED FOR RELEASE ED ARTIGLIA

Los Alamos NATIONAL LABORATORY PO Box 1663 Los Alamos, New Mexico 87545

SHEET P-7400

31 OF 69

CLASSIFICATION REVIEWER DATE

PROJECT ID 100761

DRAWING NO C55867

REV 0

CHARLES MOYERS NEW MEXICO 19838 REGISTERED PROFESSIONAL ENGINEER 05-01-14

File Location: P:\RLWTF LOW-LEVEL WASTE FACILITY\300 CAD\C55867 EFFLUENT STORAGE TANKS\SHEETS\13 PLUMBING\55867-P-7400-R0.DWG
Plotted By: DAWSON, WARREN Plot Date: Friday, May 02, 2014

C55867 : 0

PROCESS SYMBOL LEGEND

LINE TYPES

SYMBOL	DESCRIPTION
———	PRIMARY PROCESS FLOW LINE
———	SECONDARY PROCESS FLOW LINE
———	INSTRUMENT SUPPLY OR CONNECTION TO PROCESS LINE
—·—·—	PNEUMATIC SIGNAL
—o—o—	SOFTWARE LINK
— — —	ELECTRIC SIGNAL
—L—L—	HYDRAULIC SIGNAL
—E—E—	ELECTRICAL HEAT TRACING
— — —	EXISTING
—⊂⊃—	BURIED PIPE IN PIPE
≡≡≡≡≡	BURIED PIPE

ABBREVIATIONS

(ALL ABBREVIATIONS SHOWN ARE NOT NECESSARILY USED ON THE DRAWINGS)

EQUIPMENT

AOBV	AIR OPERATED BALL VALVE
BFP	BACK FLOW PREVENTER
CHR	CHILLER
COND	CONDUCTIVITY
DAR	DRYER AIR
EDU	EDUCTOR
ENC	ENCLOSURE
ESB	EFFLUENT SAMPLE BUILDING
ESCB	EFFLUENT STORAGE CONTAINMENT BASIN
EVAP	EVAPORATOR
FAC	FILTER AIR COMPRESSED
FAH	FILTER AIR HEPA
FAR	FILTER AIR ROUGHING
FCV	FLOW CONTROL VALVE
FLT	FILTER LIQUID
HEPA	HIGH EFFICIENCY PARTICULATE AIR FILTER
HX	HEAT EXCHANGER
IC	INTERFACE CONTROL
LLW	LOW LEVEL WASTE
MF	MICRO FILTER
MC	MIXER CHEMICAL
MOBV	MOTOR OPERATED BALL VALVE
P	PUMP
PAC	PUMP ACID OR CHEMICAL
PCW	PUMP CHILLED WATER
PRV	PRESSURE RELIEF VALVE
PS	PUMP SUMP
ROU	REVERSE OSMOSIS UNIT
SCR	SILICON CONTROLLED RECTIFIER
SM	SUMP
SMP	SAMPLER
SV	SOLENOID VALVE
TAC	TANK ACID OR CHEMICAL
TCA	TANK COMPRESSED AIR
TK	TANK
T	TRAP
V	VALVE
VC	CHECK VALVE
VFD	VARIABLE FREQUENCY DRIVE

LINE TYPE

CA	COMPRESSED AIR
CS	CHEMICAL SUPPLY
CWR	CHILLED WATER RETURN
CWS	CHILLED WATER SUPPLY
HRR	HEAT RECOVERY RETURN
HRS	HEAT RECOVERY SUPPLY
HWR	HEATING WATER RETURN
HWS	HEATING WATER SUPPLY
LLW	LOW LEVEL WASTE
NG	NATURAL GAS
NPWC	NON-POTABLE WATER COLD
PCWS	PROCESS CHILLED WATER SUPPLY
PCWR	PROCESS CHILLED WATER RETURN
PRW	PROCESS WATER
PWC	POTABLE WATER COLD
PWHR	POTABLE WATER HOT RETURN
PWHS	POTABLE WATER HOT SUPPLY
SW	SANITARY WASTE

LINE VALVE STATUS SYMBOLS

TYPICAL VALVE ANNOTATIONS

FO	FAIL OPEN
FC	FAIL CLOSED
NO	NORMALLY OPEN
NC	NORMALLY CLOSE
LO	LOCKED OPEN
LC	LOCKED CLOSED
O/C	OPEN/CLOSE

MISCELLANEOUS

ATR ALL THREAD ROD

MATERIAL/CLASSIFICATION

CS	–	CARBON STEEL
CU	–	COPPER
HDPE	–	HIGH DENSITY POLYETHYLENE
SS150	–	STAINLESS STEEL 150#
SS300	–	STAINLESS STEEL 300#

LINE LABELING LEGEND

LLW-303-SS150-3"

- LINE SIZE
- MATERIAL/CLASSIFICATION
- LINE NUMBER
- LINE TYPE

(GENERAL INSTRUMENT OR FUNCTION SYMBOLS) P&ID SYMBOLS

SYMBOL	DESCRIPTION	SYMBOL	DESCRIPTION	SYMBOL	DESCRIPTION
	BALL VALVE		HORIZONTAL TANK		CENTRIFUGAL PUMP
	BUTTERFLY VALVE		TANK		VACUUM PUMP
	CHECK VALVE		SLOPED BOTTOM TANK		REPLACEABLE CORE FILTER DRYER/INLINE FILTER
	NEEDLE VALVE		ELLIPTICAL TOP TANK		
	SELF CLOSING MANUAL VALVE		ELLIPTICAL BOTTOM TANK WITH SKIRT		CONDENSER
	KNIFE GATE VALVE		CONICAL BOTTOM TANK WITH LEGS		
	THREE WAY VALVE		MICRO FILTER OR RO ARRAY		COLD EVAPORATOR
	SAFETY OR RELIEF VALVE		55 GALLON DRUM (WITH OPTIONAL ASSEMBLY)		POLISHING FILTER
S	2 WAY SOLENOID		OPEN DRAIN (SHOWN)		ROUGHING FILTER
S	3 WAY SOLENOID		MIXER		LOW POINT LEAK DETECTOR
	SELF REGULATING FLOW/PRESSURE CONTROL VALVE		HEATER		AIR DIAPHRAGM PUMP
	SPRING-OPPOSED SINGLE-ACTING ACTUATOR		MOTOR		FLEX HOSE
	MODULATING VALVE ACTUATOR		FILTER		INTERFACE CONTROL POINT
ZS	AIR OPERATED SPRING RETURN		SAMPLE BOTTLE		EXTERIOR WALL OR FLOOR PENETRATION
F	FLOW ELEMENT (GENERIC)		HEAT EXCHANGER		FLEX HOSE IDENTIFIER
S	SOLENOID		EDUCTOR		SPECIFICATION/LINE NUMBER CHANGE
	VERTICAL SUMP PUMP		THERMOWELL		ROTAMETER
	SUMP		ROTARY PRESS		EXAMINATION PORT
	SPRAY BALL		METERING PUMP		SILENCER/MUFFLER
	FLANGED CONNECTION (PIPING OR EQUIP)		LINE CONTINUATION		ORIFICE
	HOSE CONNECTION		3/8" BULKHEAD CONNECTOR (TOP OF TANK)		THREADOLET
	PIPE CAP				CHEMICAL DAY TANK CONTAINMENT
	QUICK COUPLING				
	REDUCER (SIZE DEFINED ON P&ID)				
	PUMP				
1/8"	SLOPE				
	FILTER WITH WEATHER CAP				
	DIAPHRAGM				

INSTRUMENT/FUNCTION SYMBOLS

	PRIMARY LOCATION NORMALLY ACCESSIBLE TO OPERATOR	FIELD MOUNTED	AUXILIARY LOCATION NORMALLY ACCESSIBLE TO OPERATOR	AUXILIARY LOCATION NORMALLY INACCESSIBLE TO OPERATOR
DISCRETE INSTRUMENTS	J1 / J2	J1 / J2	J1 / J2	J1 / J2
SHARED DISPLAY, SHARED CONTROL	J1 / J2	J1 / J2	J1 / J2	J1 / J2

INTERLOCK SYMBOL

- I / X — HARD WIRED INTERLOCK — INTERLOCK NUMBER
- I / X — SOFTWARE INTERLOCK — INTERLOCK NUMBER

GENERAL NOTES

1. ALL REMOTE ACTUATED VALVES ARE FAIL CLOSED UNLESS OTHERWISE INDICATED.
2. ALL PRV'S ON LIQUID LINES SHALL DISCHARGE TO NEAREST FLOOR TRENCH, UNLESS PIPE ROUTING IS OTHERWISE INDICATED.

NO	DATE	CLASS REV	ADC	DESCRIPTION	DWN	DES	CHKD	SUB	APP

AECOM

RLWTF–UP LOW LEVEL WASTE SUBPROJECT

PROCESS P&ID SYMBOL LEGEND

BLDG. 261 TA–50

DRAWN	V DAVISON
DESIGN	S MOORE
CHECKED	E ROGERS
DATE	5/8/14

SUBMITTED MANNY TARIN — APPROVED FOR RELEASE ED ARTIOLIA

Los Alamos NATIONAL LABORATORY — PO Box 1663 Los Alamos, New Mexico 87545

SHEET D–0401 — 32 OF 69

CLASSIFICATION — REVIEWER — DATE

PROJECT ID 100761 — DRAWING NO C55867 — REV 0

M. EVELYN ROGERS — NEW MEXICO — 22184 — PROFESSIONAL ENGINEER — 5/9/14

File Location: P:\RLWTF LOW-LEVEL WASTE FACILITY\300 CAD\C55867 EFFLUENT STORAGE TANKS\SHEETS\14 PROCESS\55867_D-0401-R0.DWG
Plotted By: DAVISON, VANESSA Plot Date: Friday, May 02, 2014

VALVE & INSTRUMENTATION IDENTIFIER LETTERS

FIRST-LETTERS	INDICATING MEASURED OR CONTROLLED VARIABLE	CONTROLLERS			VALVES	READOUT DEVICE		SWITCHES AND ALARM DEVICES			TRANSMITTERS			SOLENOIDS RELAYS COMPUTING DEVICES	PRIMARY ELEMENT	TEST POINT	WELL OR PROBE	VIEWING DEVICE GLASS	SAFETY DEVICE	FINAL ELEMENT
		RECORDING	INDICATING	BLIND		RECORDING	INDICATING	HIGH*	LOW	COMB	RECORDING	INDICATING	BLIND							
A	ANALYSIS	ARC	AIC	AC		AR	AI	ASH	ASL	ASHL	ART	AIT	AT	AY	AE	AP	AW			AV
B	BURNER/ COMBUSTION	BRC	BIC	BC		BR	BI	BSH	BSL	BSHL	BRT	BIT	BT	BY	BE		BW	BG		BZ
C	CONDUCTIVITY		CIC	CC											CE					
D	USER'S CHOICE																			
E	VOLTAGE	ERC	EIC	EC		ER	EI	ESH	ESL	ESHL	ERT	EIT	ET	EY	EE					EZ
F	FLOW RATE	FRC	FIC	FC	FCV FICV	FR	FI	FSH	FSL	FSHL	FRT	FIT	FT	FY	FE	FP		FG		FV
FQ	FLOW QUANTITY	FQRC	FQIC			FQR	FQI	FQSH	FQSL			FQIT	FQT	FQY	FQE					FQV
FF	FLOW RATIO	FFRC	FFIC	FFC		FFR	FFI	FFSH	FFSL						FE					FFV
G	USER'S CHOICE																			
H	HAND		HIC	HC	HV					HS										HV
I	CURRENT	IRC	IIC			IR	II	ISH	ISL	ISHL	IRT	IIT	IT	IY	IE					IZ
J	POWER	JRC	JIC	ARC		JR	JI	JSH	JSL	JSHL	JRT	JIT	JT	JY	JE					JV
K	TIME	KRC	KIC	KC	KCV	KR	KI	KSH	KSL	KSHL	KRT	KIT	KT	KY	KE					KV
L	LEVEL	LRC	LIC	LC	LCV	LR	LI	LSH	LSL	LSHL	LRT	LIT	LT	LY	LE		LW	LG		LV
LD	LEAK DETECTOR																			
M	MOISTURE/ HUMIDITY						MI						MT							
N	USER'S CHOICE																			
O	USER'S CHOICE																			
P	PRESSURE VACUUM	PRC	PIC	PC	PCV	PR	PI	PSH	PSL	PSHL	PRT	PIT	PT	PY	PE	PTP			PSV PSE	PV
PD	PRESSURE DIFFERENTIAL	PDRC	PDIC	PDC	PDCV	PDR	PDI	PDSH	PDSL		PDRT	PDIT	PDT	PDY	PE	PTP				PDV
PH	PH																			
Q	QUALITY	QRC	QIC			QR	QI	QSH	QSL	QSHL	QRT	QIT	QT	QY	QE					QZ
R	RADIATION	RRC	RIC	RC		RR	RI	RSH	RSL	RSHL	RRT	RIT	RT	RY	RE		RW			RZ
S	SPEED	SRC	SIC	SC	SCV	SR	SI	SSH	SSL	SSHL	SRT	SIT	ST	SY	SE					SV
T	TEMPERATURE	TRC	TIC	TC	TCV	TR	TI	TSH	TSL	TSHL	TRT	TIT	TT	TY	TE	TP	TW		TSE	TV
T	TEMPERATURE DIFFERENTIAL	TDRC	TDIC	TDC	TDCV	TDR	TDI	TDSH	TDSL		TDRT	TDIT	TDT	TDY	TDE	TDP TP	TDW TW			TDV
U	MULTIVARIABLE					UR	UI							UY						UV
V	MACHINERY VIBRATION ANALYSIS					VR	VI	VSH	VSL	VSHL	VRT	VIT	VT	VY	VE					VZ
W	WEIGHT FORCE	WRC	WIC	WC	WCV	WR	WI	WSH	WSL	WSHL	WRT	WIT	WT	WY	WE					WZ
WD	WEIGHT FORCE DIFFERENTIAL	WDRC	WDIC	WDC	WDCV	WDR	WDI	WDSH	WDSL		WDRT	WDIT	WDT	WDY	WDE WE					WDZ
X	USER'S CHOICE																			
Y	EVENT STATE PRESENCE		YIC	YC		YR	YI	YSH	YSL				YT	YY	YE					YZ
Z	POSITION DIMENSION	ZRC	ZIC	ZC	ZCV	ZR	ZI	ZSH	ZSL	ZSHL	ZRT	ZIT	ZT	ZY	ZE					ZV
ZD	GAUGING DEVIATION	ZDRC	ZDIC	ZDC	ZDCV	ZDR	ZDI	ZDSH	ZDSL		ZDRT	ZDIT	ZDT	ZDY	ZDE					ZDV

NOTE:
THIS TABLE IS NOT ALL-INCLUSIVE
*A, ALARM, THE ANNUNCIATING DEVICE MAY BE USED IN THE SAME FASHION AS, SWITCH, THE ACTING DEVICE.
** THE LETTERS H AND L MAY BE OMITTED IN THE UNDEFINED CASE.

OTHER POSSIBLE COMBINATIONS:

FO	(RESTRICTION ORIFICE)	PFR	(RATIO)
FRK, HIK	(CONTROL STATIONS)	KQI	(RUNNING TIME INDICATOR)
FX	(ACCESSORIES)	QQI	(INDICATING COUNTER)
TJR	(SCANNING RECORDER)	WKIC	(RATE-OF-WEIGHT-LOSS CONTROLLER)
LLH	(PILOT LIGHT)	HMS	(HAND MOMENTARY SWITCH)

INSTRUMENT/EQUIPMENT LABELING LEGEND

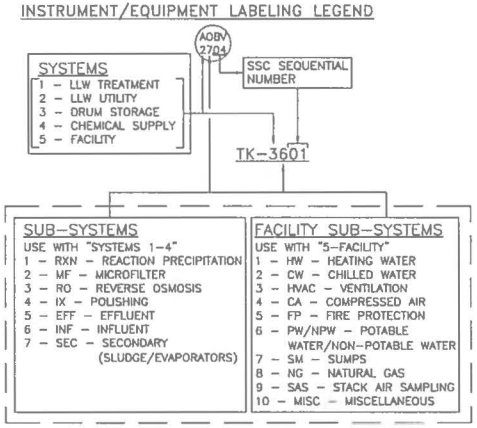

INSTRUMENTATION IDENTIFICATION TABLE

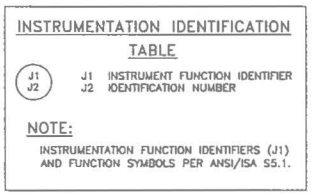

INTERFACE CONTROL POINTS LEGEND

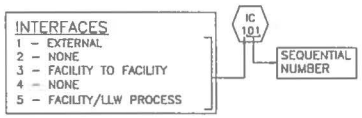

NO	DATE	CLASS REV	ADC	DESCRIPTION	DWN	DES	CHKD	SUB	APP

AECOM

RLWTF-UP LOW LEVEL WASTE SUBPROJECT

PROCESS P&ID SYMBOL LEGEND

BLDG. 261 TA-50

DRAWN	V DAVISON
DESIGN	S MOORE
CHECKED	E ROGERS
DATE	5/8/14

SUBMITTED MANNY TARIN

APPROVED FOR RELEASE ED ARTIOLIA

Los Alamos NATIONAL LABORATORY PO Box 1663 Los Alamos, New Mexico 87545

SHEET D-0402

33 OF 69

CLASSIFICATION | REVIEWER | DATE

PROJECT ID 100761 | DRAWING NO C55867 | REV 0

M. EVELYN ROGERS 22184 NEW MEXICO PROFESSIONAL ENGINEER

5/8/14

File Location: P:\RLWTF LOW-LEVEL WASTE FACILITY\300 CAD\C55867 EFFLUENT STORAGE TANKS\SHEETS\14 PROCESS\55867-D-0402-P&D.DWG
Plotted By: DAVISON, VANESSA Plot Date: Friday, May 02, 2014

12512

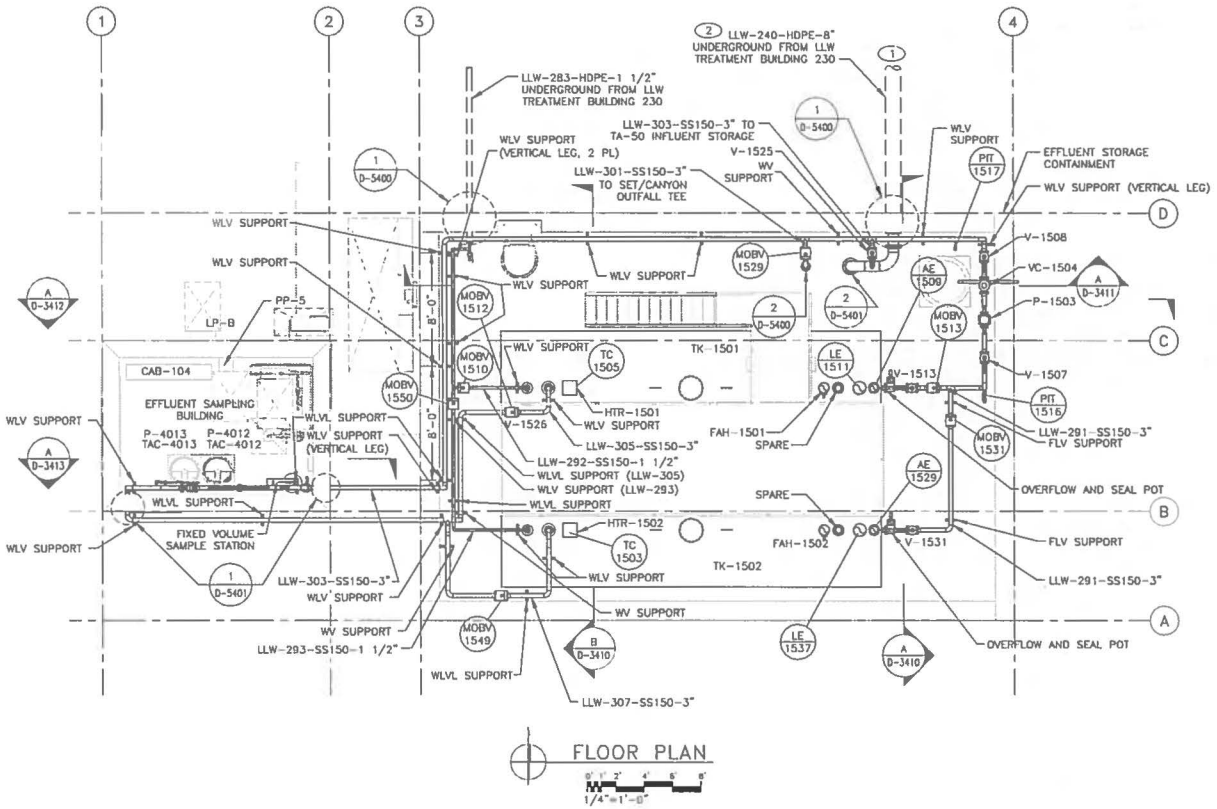

FLOOR PLAN

1/4"=1'-0"

GENERAL NOTES

1. IF THIS SHEET IS NOT 24"X36", THEN IT IS A REDUCED SIZE PLOT. USE THE GRAPHIC SCALE ACCORDINGLY.
2. INSULATION AND HEAT TRACE NOT SHOWN FOR CLARITY. SEE SHEET E-1403 EFFLUENT TANK HEAT TRACE PLAN.
3. REFER TO DRAWING C55867, SHEET D-5101 FOR PIPE SUPPORT CODE TYPE.

KEYED NOTES

(1) SEE DRAWING C55864 SHEET P-1107 FOR CONTINUATION.

(2) HDPE PIPE-IN-PIPE. 8" PRIMARY IN 12" SECONDARY CONTAINMENT.

NO	DATE	CLASS REV	ADC	DESCRIPTION	DWN	DES	CHKD	SUB	APP

AECOM

RLWTF-UP LOW LEVEL WASTE SUBPROJECT

PROCESS FLOOR PLAN

BLDG. 261 TA-50

DRAWN	V DAVISON
DESIGN	S. MOORE
CHECKED	E ROGERS
DATE	5/8/14

SUBMITTED MANNY TARIN

APPROVED FOR RELEASE ED ARTIOLIA

Los Alamos NATIONAL LABORATORY PO Box 1663 Los Alamos, New Mexico 87545

SHEET D-1400

34 OF 69

CLASSIFICATION | REVIEWER | DATE

PROJECT ID 100761 | DRAWING NO C55867 | REV 0

M. EVELYN ROGERS NEW MEXICO 22184 REGISTERED PROFESSIONAL ENGINEER 5/15/14

File Location: P:\RLWTF LOW-LEVEL WASTE FACILITY\300 CAD\C55867 EFFLUENT STORAGE TANKS\SHEETS\14 PROCESS\55867-D-1400-R0.DWG
Plotted By: MOORE, STEPHEN Plot Date: Tuesday, May 13, 2014

C55867

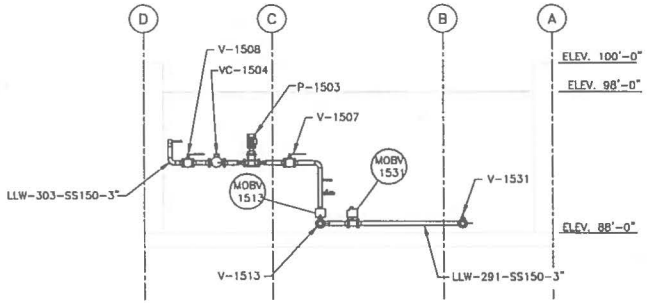

A D-1400 PROCESS SECTION – EAST

0' 1' 2' 4' 6' 8'
1/4"=1'-0"

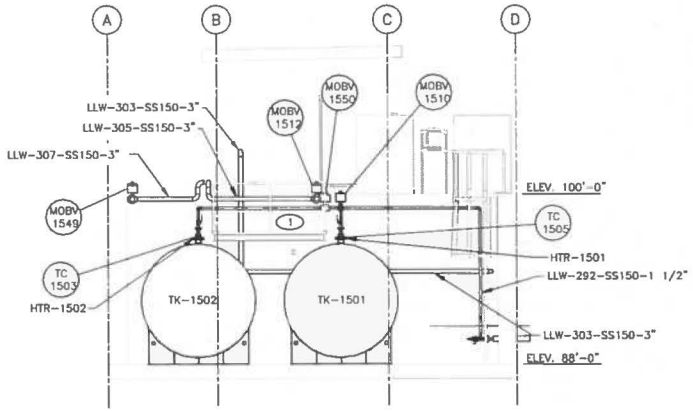

B D-1400 PROCESS SECTION – WEST

0' 1' 2' 4' 6' 8'
1/4"=1'-0"

GENERAL NOTES

1. IF THIS SHEET IS NOT 24"X36", THEN IT IS A REDUCED SIZE PLOT. USE THE GRAPHIC SCALE ACCORDINGLY.
2. INSULATION AND HEAT TRACE NOT SHOWN FOR CLARITY. SEE SHEET E-1403 EFFLUENT TANK HEAT TRACE PLAN.
3. ELEVATION 100'-0" CORRESPONDS TO MEAN SEA LEVEL ELEVATION OF 7265.00 FEET.

KEYED NOTES

1. PLATFORM AND STAIRS PROVIDED BY VENDOR WITH EFFLUENT TANKS.

NO	DATE	CLASS REV	ADC	DESCRIPTION	DWN	DES	CHKD	SUB	APP

AECOM

RLWTF-UP LOW LEVEL WASTE SUBPROJECT

PROCESS SECTION

BLDG. 261 TA-50

DRAWN	V DAVISON
DESIGN	S MOORE
CHECKED	E ROGERS
DATE	5/8/14

SUBMITTED MANNY TARIN

APPROVED FOR RELEASE ED ARTIGLIA

Los Alamos NATIONAL LABORATORY PO Box 1663 Los Alamos, New Mexico 87545

SHEET D-3410

35 OF 69

CLASSIFICATION | REVIEWER | DATE

PROJECT ID 100761 | DRAWING NO C55867 | REV 0

M. EVELYN ROGERS NEW MEXICO 22184 PROFESSIONAL ENGINEER 5/15/14

File Location: P:\RLWTF LOW-LEVEL WASTE FACILITY\500 CAD\C55867 EFFLUENT STORAGE TANKS\SHEETS\14 PROCESS\55867-D-3410-R0.DWG
Plotted By: DAVISON, VANESSA Plot Date: Friday, May 02, 2014

12541

GENERAL NOTES

1. IF THIS SHEET IS NOT 24"X36", THEN IT IS A REDUCED SIZE PLOT. USE THE GRAPHIC SCALE ACCORDINGLY.
2. INSULATION AND HEAT TRACE NOT SHOWN FOR CLARITY. SEE SHEET E-1403 EFFLUENT TANK HEAT TRACE PLAN.
3. ELEVATION 100'-0" CORRESPONDS TO MEAN SEA LEVEL ELEVATION OF 7265.00 FEET.

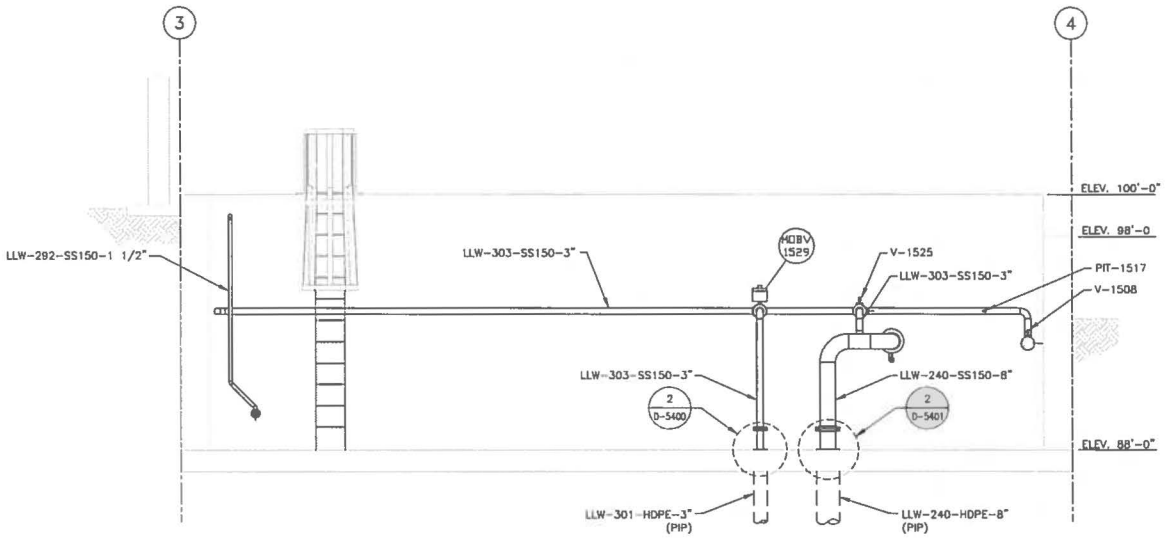

A D-1400 PROCESS SECTION – NORTH

1' 0 1' 2' 3' 4'
3/8"=1'-0"

NO	DATE	CLASS REV	ADC	DESCRIPTION	DWN	DES	CHKD	SUB	APP

AECOM

RLWTF-UP LOW LEVEL WASTE SUBPROJECT

PROCESS SECTION

BLDG. 261 TA-50

DRAWN	V DAVISON
DESIGN	S MOORE
CHECKED	E ROGERS
DATE	5/8/14

SUBMITTED MANNY TARIN

APPROVED FOR RELEASE ED ARTIGLIA

Los Alamos NATIONAL LABORATORY PO Box 1663 Los Alamos, New Mexico 87545

SHEET D-3411

36 OF 69

CLASSIFICATION | REVIEWER | DATE

PROJECT ID 100761 | DRAWING NO C55867 | REV 0

M. EVELYN ROGERS NEW MEXICO 22184 PROFESSIONAL ENGINEER 5/15/14

File Location: R:\RLWTF LOW-LEVEL WASTE FACILITY\500 CAD\C55867 EFFLUENT STORAGE TANKS\SHEETS\14 PROCESS\55867-D-3411-R0.DWG
Plotted By: MOORE, STEPHEN; Plot Date: Thursday, May 15, 2014

5492 : 12645

GENERAL NOTES

1. IF THIS SHEET IS NOT 24"X36", THEN IT IS A REDUCED SIZE PLOT. USE THE GRAPHIC SCALE ACCORDINGLY.
2. INSULATION AND HEAT TRACE NOT SHOWN FOR CLARITY. SEE SHEET E-1403 EFFLUENT TANK HEAT TRACE PLAN.
3. ELEVATION 100'-0" CORRESPONDS TO MEAN SEA LEVEL ELEVATION OF 7265.00 FEET.

KEYED NOTES

(1) PLATFORM AND STAIRS PROVIDED WITH EFFLUENT TANKS.

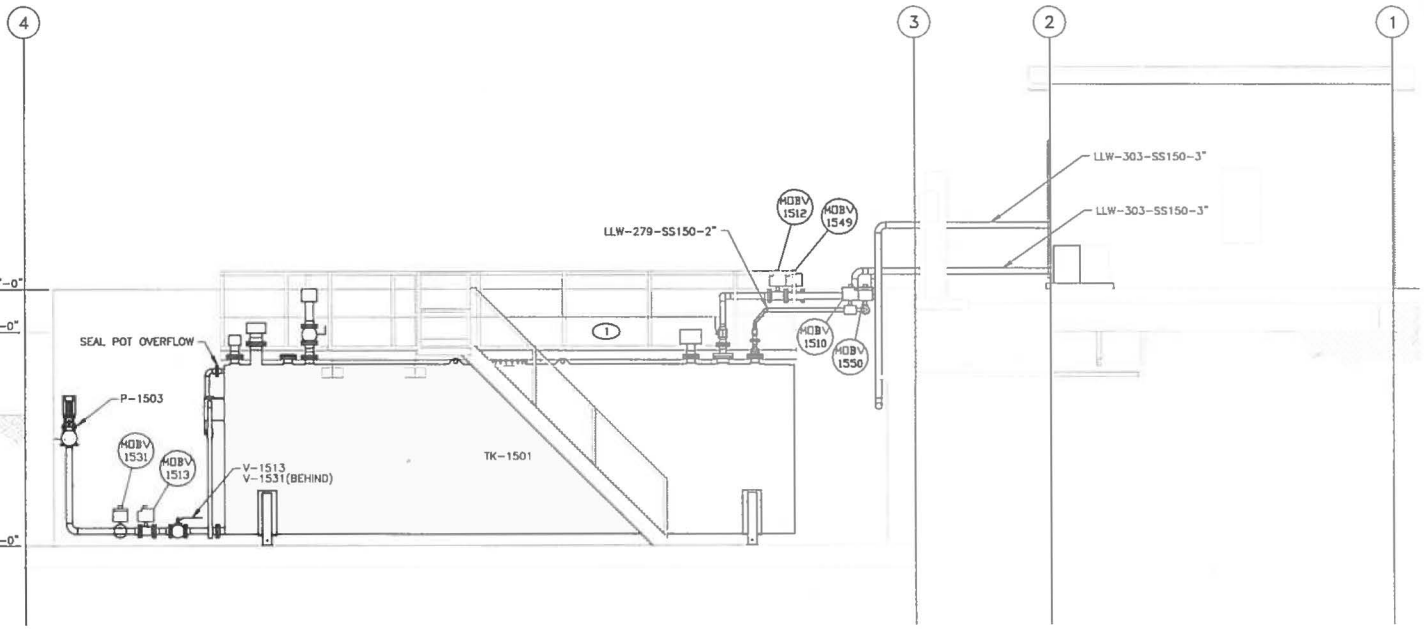

A D-1400 PROCESS SECTION – SOUTH

3/8"=1'-0"

NO	DATE	CLASS REV	ADC	DESCRIPTION	DWN	DES	CHKD	SUB	APP

AECOM

RLWTF-UP LOW LEVEL WASTE SUBPROJECT

PROCESS SECTION

BLDG. 261 TA-50

DRAWN	V DAVISON
DESIGN	S MOORE
CHECKED	E ROGERS
DATE	5/6/14

SUBMITTED: MANNY TARIN

APPROVED FOR RELEASE: ED ARTIGLIA

Los Alamos NATIONAL LABORATORY PO Box 1663 Los Alamos, New Mexico 87545

SHEET D-3412

37 OF 69

CLASSIFICATION | REVIEWER | DATE

PROJECT ID 100761 | DRAWING NO C55867 | REV 0

M. EVELYN ROGERS NEW MEXICO 22184 PROFESSIONAL ENGINEER 5/6/14

File Location: P:\RLWTF LOW-LEVEL WASTE FACILITY\500 CAD\C55867 EFFLUENT STORAGE TANKS\SHEETS\14 PROCESS\55867-D-3412-R0.DWG
Plotted By: DAVISON, WAMESSA; Plot Date: Friday, May 02, 2014

12646

GENERAL NOTES

1. IF THIS SHEET IS NOT 24"X36", THEN IT IS A REDUCED SIZE PLOT. USE THE GRAPHIC SCALE ACCORDINGLY.
2. INSULATION AND HEAT TRACE NOT SHOWN FOR CLARITY. SEE SHEET E-1403 EFFLUENT TANK HEAT TRACE PLAN.
3. ELEVATION 100'-0" CORRESPONDS TO MEAN SEA LEVEL ELEVATION OF 7265.00 FEET.

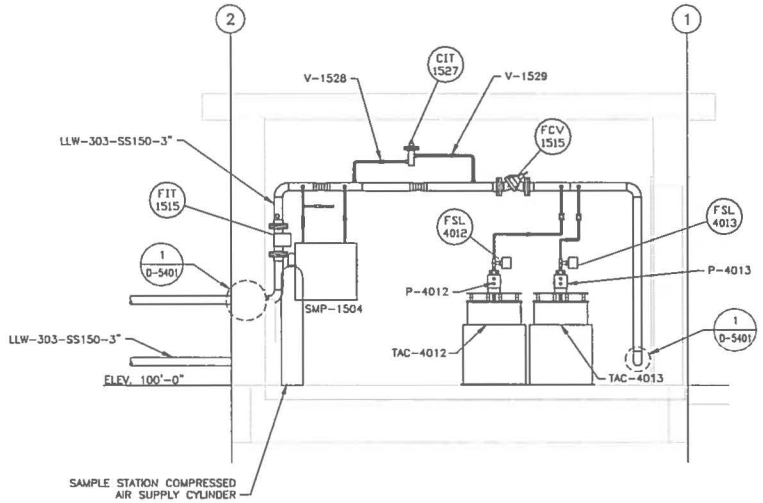

A D-1400 PROCESS SECTION – SAMPLE BUILDING SOUTH

1' 6" 0 1' 3' 3'
1/2"=1'-0"

NO	DATE	CLASS REV	ADC	DESCRIPTION	DWN	DES	CHKD	SUB	APP

AECOM

RLWTF-UP LOW LEVEL WASTE SUBPROJECT

PROCESS SECTION

DRAWN	V. DAVISON
DESIGN	S. MOORE
CHECKED	E. ROGERS
DATE	5/6/14

BLDG. 261 TA-50

SUBMITTED MANNY TARIN

APPROVED FOR RELEASE ED ARTIOLIA

Los Alamos NATIONAL LABORATORY PO Box 1663 Los Alamos, New Mexico 87545

SHEET D-3413

38 OF 69

CLASSIFICATION | REVIEWER | DATE

PROJECT ID 100761 | DRAWING NO C55867 | REV 0

M. EVELYN ROGERS NEW MEXICO 22184 PROFESSIONAL ENGINEER 5/6/14

File Location: P:\RLWTF LOW-LEVEL WASTE FACILITY\580 CAD\C55867 EFFLUENT STORAGE TANKS\SHEETS\V4 PROCESS\55867-D-3413-R0.DWG
Plotted By: DAVIDA VANESS Plot Date: Friday, May 02, 2014

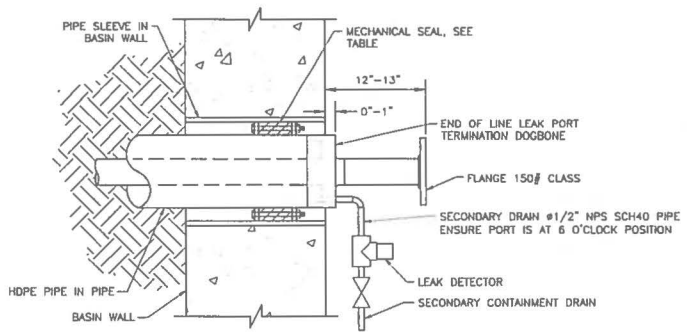

SECTION VIEW

MECHANICAL SEAL TABLE			
NOMINAL PIPE SIZE	NOMINAL SLEEVE SIZE	METRASEAL MODEL NO.	REMARKS
1 1/2"	6"	10WS–300ES	SLEEVE SCHEDULE 40 STEEL PIPE
8"	16"	12WS–425ES	SLEEVE SCHEDULE 40 STEEL PIPE

HORIZONTAL NON–METALLIC PIPE–IN–PIPE DETAIL

(1) (D-1400) SCALE: NONE

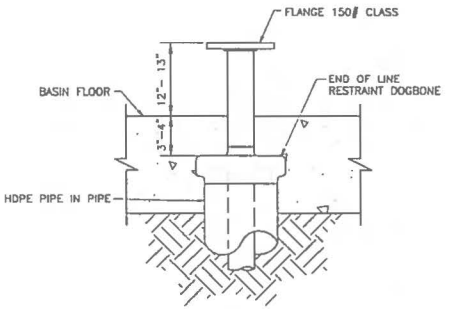

SECTION VIEW

VERTICAL NON–METALLIC PIPE–IN–PIPE DETAIL

(2) (D-3411) (2) (D-1400) SCALE: NONE

KEYED NOTES

(1) HEAT TRACE ALL COMPONENTS SHOWN. SEE SHEET E–1403 EFFLUENT TANK HEAT TRACE PLAN.

(2) GO DOWN ONE PIPE SIZE WITH BACK TO BACK REDUCERS TO CREATE SMALL BACK PRESSURE.

(3) COMPRESSED AIR RESERVOIR NO MORE THAN 15 PSI.

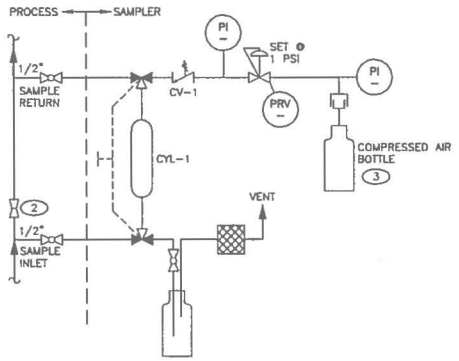

FRONT VIEW

SAMPLER NO.	LINE NO.	PRV NO.	PI NO.	CHECK VALVE NO.
SMP–1504	CA–XXX–SS150–1/4"	PRV–1504	PI–1504	VC–1505

(3) (D-6412) MANUAL FIXED VOLUME SAMPLER DETAIL SCALE: NONE

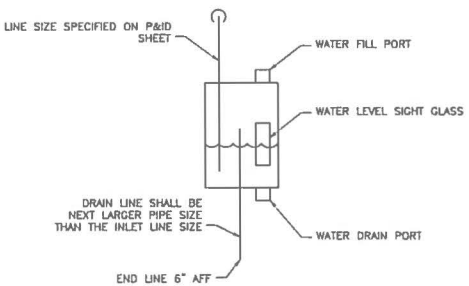

FRONT VIEW

(1) (4) (D-6411) (4) (D-6410) TANK SEAL POT DETAIL SCALE: NONE

NO	DATE	CLASS REV	ADC	DESCRIPTION	DWN	DES	CHKD	SUB	APP

AECOM

RLWTF–UP LOW LEVEL WASTE SUBPROJECT

DETAILS

BLDG. 261 TA–50

DRAWN	V DAVISON	
DESIGN	S MOORE	
CHECKED	E ROGERS	
DATE	3/6/14	

SUBMITTED MANNY TARIN

APPROVED FOR RELEASE ED ARTIOLA

Los Alamos NATIONAL LABORATORY PO Box 1663 Los Alamos, New Mexico 87545

SHEET D–5400 39 OF 69

CLASSIFICATION REVIEWER DATE

PROJECT ID 100761 DRAWING NO C55867 REV 0

M. EVELYN REES NEW MEXICO 22184 PROFESSIONAL ENGINEER

File Location: P:\RLWTF LOW-LEVEL WASTE FACILITY\300 CAD\C55887 EFFLUENT STORAGE TANKS\SHEETS\14 PROCESS\55887-D-5400-IRD.DWG
Plotted By: DAVISON, VANESSA; Plot Date: Friday, May 02, 2014

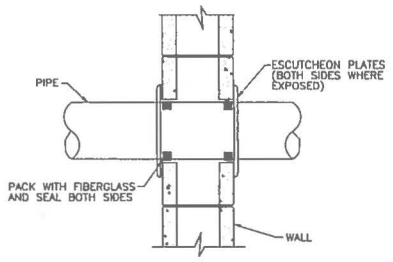

SECTION VIEW

1 / D-3413 — 1 / D-1400 PIPE PENETRATION DETAIL

SCALE: NONE

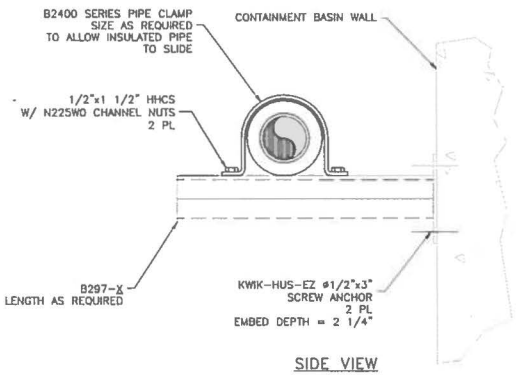

SIDE VIEW

3 / - EFFLUENT PIPE SUPPORT

0 1" 2" 4" 6" 8"
3"=1'-0"

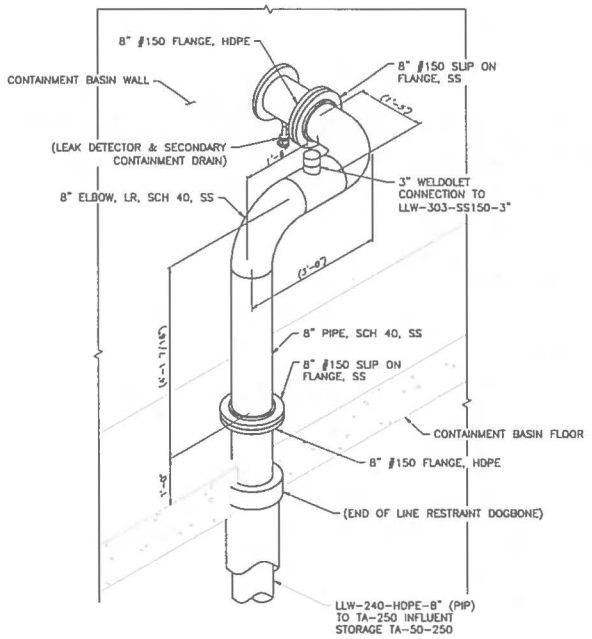

ISOMETRIC VIEW

2 / D-3411 — 2 / D-1400 LLW-240-SS150-8" DETAIL (1)

SCALE: NONE

GENERAL NOTES

1. INSULATION AND HEAT TRACE NOT SHOWN FOR CLARITY. SEE SHEET E-1403 EFFLUENT TANK HEAT TRACE PLAN.

KEYED NOTES

(1) INSTALL 8" SS PIPE SPOOL USING APPROPRIATE BOLTING HARDWARE AND GASKETS. TORQUE FASTENERS TO HDPE FLANGE MANUFACTURES RECOMMENDED VALUES TO ENSURE LEAK TIGHT CONNECTION WITHOUT DAMAGING HDPE FLANGE INTERFACE.

NO	DATE	CLASS REV	ADC	DESCRIPTION	DWN	DES	CHKD	SUB	APP

AECOM

RLWTF-UP LOW LEVEL WASTE SUBPROJECT

DETAILS

BLDG. 261 TA-50

SUBMITTED MANNY TARIN

APPROVED FOR RELEASE ED ARTIGLIA

Los Alamos NATIONAL LABORATORY PO Box 1663 Los Alamos, New Mexico 87545

DRAWN	V DAVISON
DESIGN	S MOORE
CHECKED	E ROGERS
DATE	5/8/14
SHEET	D-5401
	40 OF 69
CLASSIFICATION	
REVIEWER	
DATE	
PROJECT ID	100761
DRAWING NO	C55867
REV	0

M. EVELYN ROGERS NEW MEXICO 22184 PROFESSIONAL ENGINEER 5/8/14

File Location: P:\RLWTF LOW - LEVEL WASTE FACILITY\500 CAD\C55867 EFFLUENT STORAGE TANKS\SHEETS\14 PROCESS\55867-D-5401-R0.DWG
Plotted By: DAVISON, VANESSA Plot Date: Friday, May 02, 2014

6 of 126

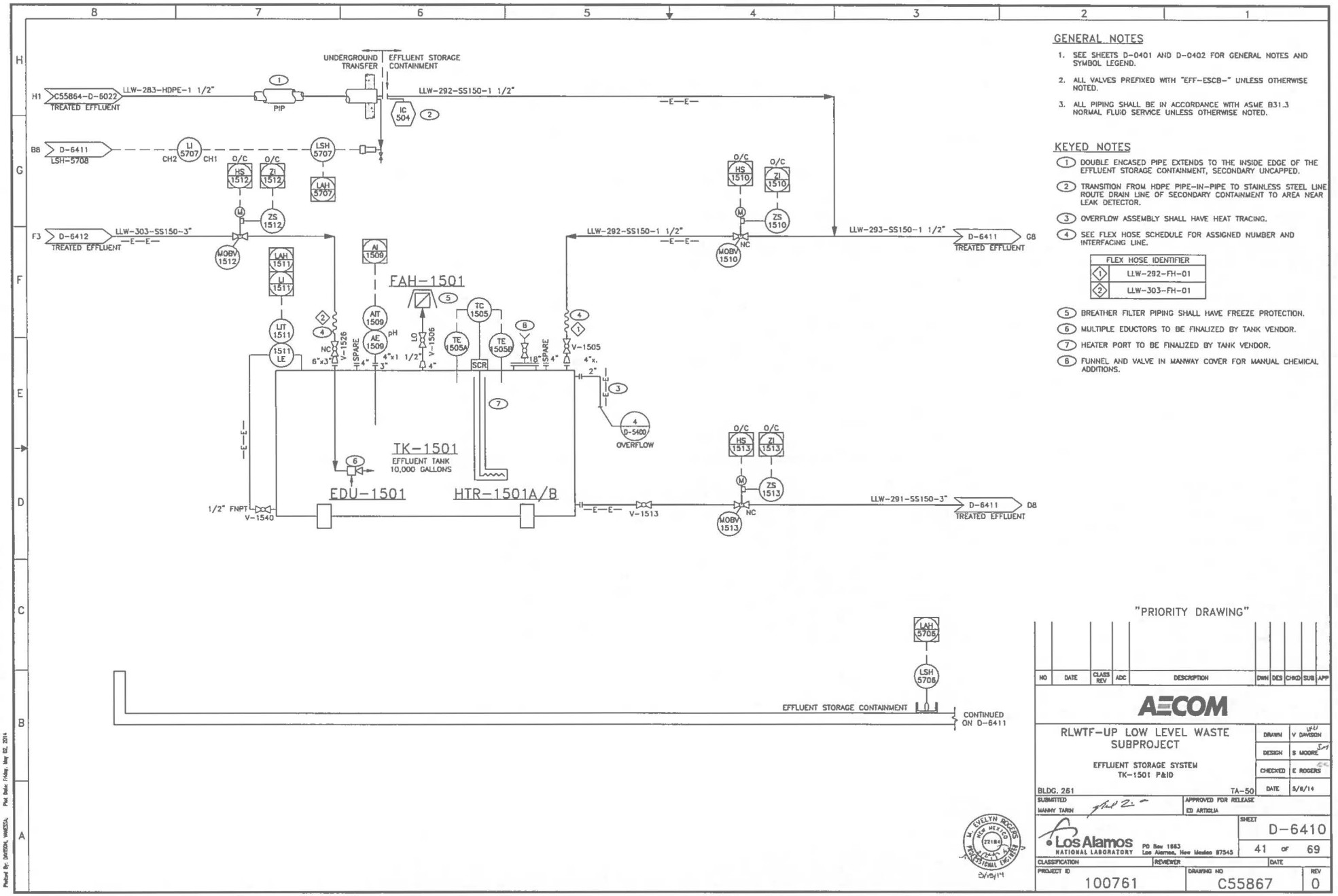

GENERAL NOTES

1. SEE SHEETS D-0401 AND D-0402 FOR GENERAL NOTES AND SYMBOL LEGEND.
2. ALL VALVES PREFIXED WITH "EFF-ESCB-" UNLESS OTHERWISE NOTED.
3. ALL PIPING SHALL BE IN ACCORDANCE WITH ASME B31.3 NORMAL FLUID SERVICE UNLESS OTHERWISE NOTED.

KEYED NOTES

(1) DOUBLE ENCASED PIPE EXTENDS TO THE INSIDE EDGE OF THE EFFLUENT STORAGE CONTAINMENT, SECONDARY UNCAPPED.

(2) TRANSITION FROM HDPE PIPE-IN-PIPE TO STAINLESS STEEL LINE ROUTE DRAIN LINE OF SECONDARY CONTAINMENT TO AREA NEAR LEAK DETECTOR.

(3) OVERFLOW ASSEMBLY SHALL HAVE HEAT TRACING.

(4) SEE FLEX HOSE SCHEDULE FOR ASSIGNED NUMBER AND INTERFACING LINE.

FLEX HOSE IDENTIFIER	
1	LLW-292-FH-01
2	LLW-303-FH-01

(5) BREATHER FILTER PIPING SHALL HAVE FREEZE PROTECTION.

(6) MULTIPLE EDUCTORS TO BE FINALIZED BY TANK VENDOR.

(7) HEATER PORT TO BE FINALIZED BY TANK VENDOR.

(8) FUNNEL AND VALVE IN MANWAY COVER FOR MANUAL CHEMICAL ADDITIONS.

"PRIORITY DRAWING"

NO	DATE	CLASS REV	ADC	DESCRIPTION	DWN	DES	CHKD	SUB	APP

AECOM

RLWTF-UP LOW LEVEL WASTE SUBPROJECT

EFFLUENT STORAGE SYSTEM
TK-1501 P&ID

BLDG. 261 TA-50

DRAWN	V DAVIDSON
DESIGN	S MOORE
CHECKED	E ROGERS
DATE	5/8/14

SUBMITTED: MANNY TARIN
APPROVED FOR RELEASE: ED ARTIOLIA

Los Alamos NATIONAL LABORATORY
PO Box 1663 Los Alamos, New Mexico 87545

SHEET D-6410
41 OF 69

CLASSIFICATION | REVIEWER | DATE

PROJECT ID 100761 | DRAWING NO C55867 | REV 0

M. EVELYN ROGERS NEW MEXICO 22184 PROFESSIONAL ENGINEER 5/15/14

File Location: P:\RLWTF LOW-LEVEL WASTE FACILITY\000 CAD\C55867 EFFLUENT STORAGE TANK\SHEET\R14 PROCESS\C55867-D-6410-R0.DWG
Plotted By: DAVIDSON, VANESSA; Plot Date: Friday, May 02, 2014

C55867 : 1 2650

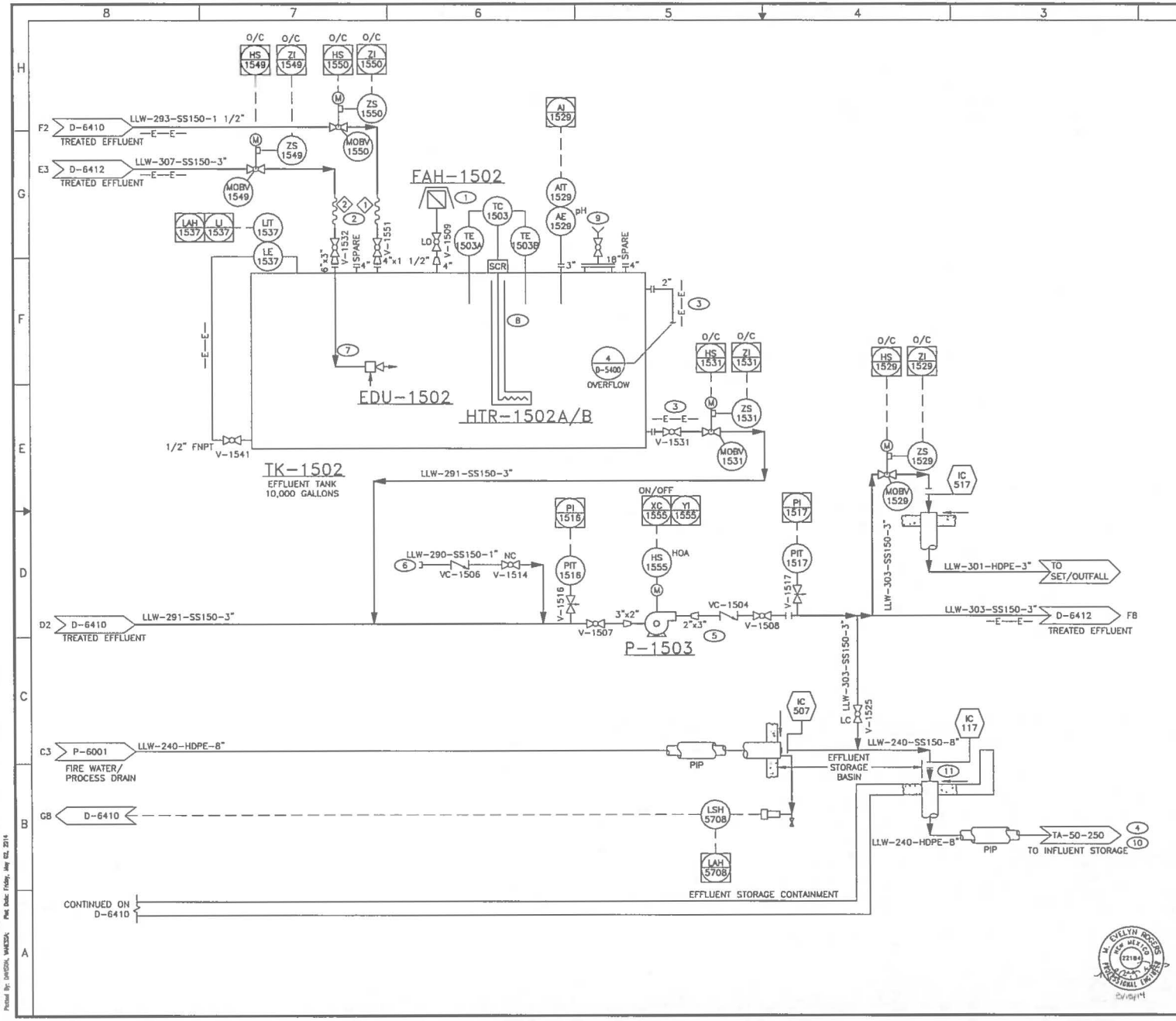

GENERAL NOTES

1. SEE SHEETS D-0401 AND D-0402 FOR GENERAL NOTES AND SYMBOL LEGEND.
2. ALL VALVES PREFIXED WITH "EFF-ESCB-" UNLESS OTHERWISE NOTED.
3. ALL PIPING SHALL BE IN ACCORDANCE WITH ASME B31.3 NORMAL FLUID SERVICE UNLESS OTHERWISE NOTED.

KEYED NOTES

1. BREATHER FILTER PIPING SHALL HAVE FREEZE PROTECTION.
2. SEE FLEX HOSE SCHEDULE FOR ASSIGNED NUMBER AND INTERFACING LINE.

FLEX HOSE IDENTIFIER	
1	LLW-293-FH-01
2	LLW-307-FH-03

3. OVERFLOW ASSEMBLY SHALL HAVE FREEZE PROTECTION.
4. FIRE WATER/PROCESS RETURN DRAIN LINE TO INFLUENT STORAGE AT TA-250.
5. PUMP VENDOR WILL INCORPORATE FLEXIBLE COUPLERS ON PUMP AND ISOLATE PUMP VIBRATIONS.
6. CONNECTION FOR FLUSHING OF PUMPS OR SUPPLEMENTAL CHEMICAL ADDITION TO EFFLUENT TANKS.
7. MULTIPLE EDUCTORS TO BE FINALIZED BY TANK VENDOR.
8. HEATER PORT TO BE FINALIZED BY TANK VENDOR.
9. FUNNEL AND VALVE IN MANWAY COVER FOR MANUAL CHEMICAL ADDITIONS.
10. INSTALL LOW POINT LEAK DETECTION STATION (LSH-5710 AND LI-5710) IN THE INFLUENT STORAGE FACILITY (TA-50-250). CONNECTION TO PLC BY PLANT PERSONNEL.
11. SECONDARY PIPE SEALED WITH ASAHI DOGBONE TO PREVENT DRAINAGE.

"PRIORITY DRAWING"

NO	DATE	CLASS REV	ADC	DESCRIPTION	DWN	DES	CHKD	SUB	APP

AECOM

RLWTF-UP LOW LEVEL WASTE SUBPROJECT

EFFLUENT STORAGE SYSTEM
TK-1502 AND PUMP P&ID

BLDG. 261 TA-50

DRAWN	V DAVISON
DESIGN	S MOORE
CHECKED	E ROGERS
DATE	5/8/14

SUBMITTED: MANNY TARIN
APPROVED FOR RELEASE: ED ARTIGLIA

Los Alamos NATIONAL LABORATORY
PO Box 1663
Los Alamos, New Mexico 87545

SHEET D-6411
42 OF 69

CLASSIFICATION | REVIEWER | DATE

PROJECT ID 100761 | DRAWING NO C55867 | REV 0

M. EVELYN ROGERS NEW MEXICO 22184 PROFESSIONAL ENGINEER
8/15/14

File Location: P:\RLWTF LOW-LEVEL WASTE FACILITY\600 CAD\C55867 EFFLUENT STORAGE TANKS\SHEETS\14 PROCESS\C55867-D-6411-R0.DWG
Plotted By: DAVISON, WAESDA Plot Date: Friday, May 02, 2014

12651

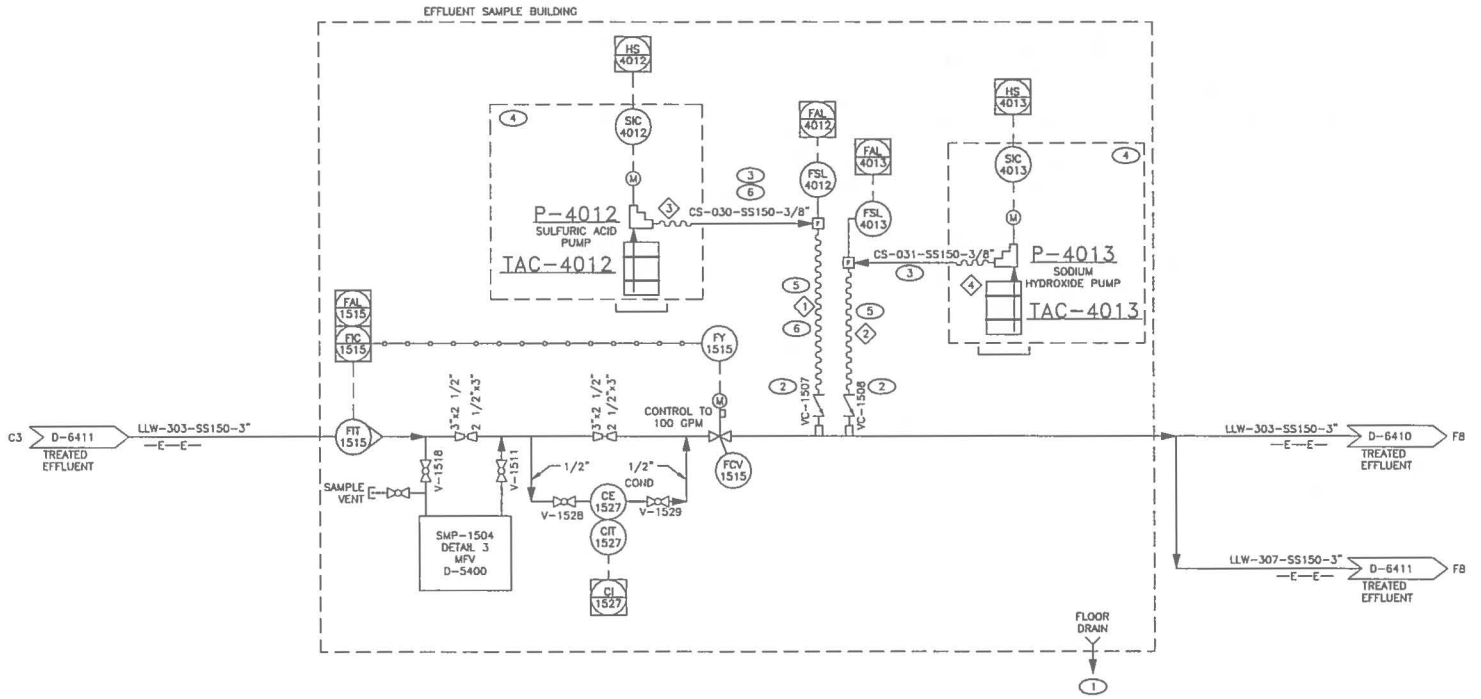

GENERAL NOTES

1. SEE SHEETS D-0401 AND D-0402 FOR GENERAL NOTES AND SYMBOL LEGEND.
2. ALL VALVES PREFIXED WITH "EFF-ESCB-" UNLESS OTHERWISE NOTED.
3. ALL PIPING SHALL BE IN ACCORDANCE WITH ASME B31.3 NORMAL FLUID SERVICE UNLESS OTHERWISE NOTED.

KEYED NOTES

(1) EFFLUENT SAMPLE BUILDING DRAINS TO EFFLUENT STORAGE CONTAINMENT. SEE SHEET P-6400.

(2) VALVES PREFIXED WITH "CS-ESB-".

(3) FIELD RUN 3/8" STAINLESS STEEL TUBING.

(4) METERING PUMP VENDOR PROVIDES EVERYTHING IN BOUNDARY INCLUDING 3/8" DISCHARGE TUBING.

(5) SEE FLEX HOSE SCHEDULE FOR ASSIGNED NUMBER AND INTERFACING LINE.

FLEX HOSE IDENTIFIER	
1	CS-030-FH-01
2	CS-031-FH-01
3	CS-412-FH-01
4	CS-413-FH-01

(6) PIPING SHALL BE IN ACCORDANCE WITH ASME B31.3 FLUID SERVICE CATEGORY M.

"PRIORITY DRAWING"

NO	DATE	CLASS REV	ADC	DESCRIPTION	DWN	DES	CHKD	SUB	APP

AECOM

RLWTF-UP LOW LEVEL WASTE SUBPROJECT

EFFLUENT STORAGE SYSTEM
SAMPLE - pH ADJUSTMENT P&ID

BLDG. 261 TA-50

DRAWN	V DAVIDSON
DESIGN	S. MOORE
CHECKED	E ROGERS
DATE	5/8/14

SUBMITTED: MANNY TARIN

APPROVED FOR RELEASE: ED ARTIGLIA

Los Alamos NATIONAL LABORATORY
PO Box 1663 Los Alamos, New Mexico 87545

SHEET D-6412
43 OF 69

CLASSIFICATION | REVIEWER | DATE

PROJECT ID 100761 | DRAWING NO C55867 | REV 0

M. EVELYN ROGERS NEW MEXICO 22184 PROFESSIONAL ENGINEER
5/9/14

File Location: P:\RLWTF LOW-LEVEL WASTE FACILITY\000 CAD\C55867 EFFLUENT STORAGE TANKS\SHEETS\D-6411 PROCESS\C55867-D-6411-2-R0.DWG
Plotted By: DAVIDSON, VANESSA Plot Date: Friday, May 02, 2014
25927

MECHANICAL SYMBOL LEGEND

(ALL ABBREVIATIONS SHOWN ARE NOT NECESSARILY USED ON THE DRAWINGS)

(ALL SYMBOLS SHOWN ARE NOT NECESSARILY USED ON THE DRAWINGS)

ABBREVIATIONS

AFF	ABOVE FINISHED FLOOR
AFG	ABOVE FINISHED GRADE
AD	ACCESS DOOR
AI	ANALOG INPUT
AL	ACOUSTIC LINING
AC	AIR CONDITIONING
AO	ANALOG OUTPUT
AHU	AIR HANDLING UNIT
AR	ARGON
AV	ANALOG VALVE
BAS	BUILDING AUTOMATION SYSTEM
BC	BOLT CIRCLE
BDD	BACKDRAFT DAMPER
BOD	BOTTOM OF DUCT
BOP	BOTTOM OF PIPE
BHP	BRAKE HORSEPOWER
BTUH	BTU PER HOUR
BI	BINARY INPUT
BO	BINARY OUTPUT
BP	BUILDING PRESSURE
BV	BINARY VALVE
C	COMMON
CAM	CONTINUOUS AIR MONITORING
CAV	CONSTANT AIR VOLUME
CFM	CUBIC FEET PER MINUTE
CO	CLEANOUT
COND	CONDENSATE
CONT.	CONTINUATION
CS	CARBON STEEL
CU	COPPER
D	DRAIN
DMP	DAMPER
DX	DIRECT EXPANSION
EL	ELBOW, ELEVATION
EP	ELECTRIC-PNEUMATIC
EXH	EXHAUST
EXV	EXHAUST VALVE
°F	DEGREES FAHRENHEIT
FT.	FEET
FPM	FEET PER MINUTE
F.G.	FILTER GAUGE
FH	FUME HOOD
FOB	FLAT ON BOTTOM
FOT	FLAT ON TOP
FLEX	FLEXIBLE
FC	FLEXIBLE CONNECTOR
FCS	FACILITY CONTROL SYSTEM
FD	FLOOR DRAIN, FIRE DAMPER
FE	FAN EXHAUST
GPH	GALLONS PER HOUR
GPM	GALLONS PER MINUTE
GFE	GOVERNMENT FURNISHED EQUIPMENT
GA	GAGE
GL	GLYCOL
HGT	HEIGHT
HD	HEAD, HUB DRAIN HEAT DETECTOR
HEPA	HIGH EFFICIENCY PARTICULATE AIR
HFM	HAND AND FOOT MONITOR
HCL	HEATING COIL
HOA	HAND-OFF-AUTOMATIC
HP	HORSEPOWER
HTG	HEATING
HTR	HEATER
HVAC	HEATING, VENTILATING AND AIR CONDITIONING
HW	HOT WATER
HYD	HYDRANT
HZ	HERTZ
IN	INCHES
I.D.	INNER DIAMETER
IRI	INDUSTRIAL RISK INSURERS
KW	KILOWATT
KWH	KILOWATT HOUR
LV	LOUVER
MA	MIXED AIR
MAX	MAXIMUM
MIN	MINIMUM
MOV	MOTOR OPERATED VALVE
MS	MOTOR STARTER
NA	NOT APPLICABLE
NC	NORMALLY CLOSED
NO.	NUMBER (QUANTITY)
NO	NORMALLY OPEN
NPW	NON-POTABLE WATER
OBD	OPPOSED BLADE DAMPER
OA	OUTSIDE AIR
O.C.	ON CENTER
O.D.	OUTER DIAMETER
OHM	OCCUPATIONAL HEALTH MONITORING
P&ID	PIPING AND INSTRUMENTATION DIAGRAM
PCM	PERSONAL CONTAMINATION MONITORING
PH	MEASURE OF ACIDITY OR ALKALINITY
PL	PLACES, PLATE
PSIG	POUNDS PER SQUARE INCH GAGE
PRV	PRESSURE REDUCING VALVE
PRV	PRESSURE RELIEF VALVE
QTY	QUANTITY
RLA	RELIEF AIR
RA	RETURN AIR
RA	REFERENCE AIR (NS)
RPM	REVOLUTIONS PER MINUTE
SA	SUPPLY AIR
SD	SMOKE DETECTOR
SIM	SIMILAR
SP	STATIC PRESSURE (INCHES OF WATER)
S.R.	SHORT RADIUS
SST	STAINLESS STEEL TUBING
TYP.	TYPICAL
TBD	TO BE DETERMINED
TCV	TEMPERATURE CONTROL VALVE
TOC	TOP OF CONCRETE
UB	UP BLAST
VX	VACUUM EXHAUST
VAV	VARIABLE AIR VOLUME
VEL	VELOCITY
VTR	VENT THRU ROOF
V	VOLTS
VAC	VOLTS, ALTERNATING CURRENT
VD	VOLUME DAMPER

EQUIPMENT CODE LISTING

AFTERCOOLER
ACL AFTER COOLER

AIR DRYER
DAD DESICCANT AIR DRYER
DAR REFRIGERANT AIR DRYER

AIR WASHER
WA AIR WASHER

BACKFLOW PREVENTER
BFP BACKFLOW PREVENTER

BASEBOARD HEATER
BDW BASEBOARD HEATER, HOT WATER
BDE BASEBOARD HEATER, ELECTRIC

BOILERS
BHW HOT WATER BOILER (HEATING)
BS STEAM BOILER (HEATING)
BWS HOT WATER SUPPLY BOILER (POTABLE/NOT-POTABLE)

EQUIPMENT CODE LISTING (CONT.)

CHILLERS
CWA ABSORPTION WATER CHILLER
CWR REFRIGERANT WATER CHILLER

COMPRESSORS
CA AIR COMPRESSOR
CR REFRIGERANT COMPRESSOR

CONDENSING UNIT (W/REFRIGERANT COMPRESSORS)
RUA REFRIGERANT AIR COOLED CONDENSING UNIT

DEHUMIDIFIER
DHM DEHUMIDIFIER

FANS
FB FAN BOOSTER
FE EXHAUST AIR FAN
FRA RETURN AIR FAN
FS SUPPLY AIR FAN

FILTERS (AIR)
FAB REPLACEMENT AIR FILTER (6" DEEP AND LARGER)
FAC CLEANABLE AIR FILTER (PERMANENT TYPE)
FAH HEPA FILTER
FAL CARBON/CHARCOAL AIR FILTER
FAP EVAPORATIVE COOLER PAD
FAR REPLACEMENT AIR FILTER (UP TO 4" DEEP)
FES ELECTROSTATIC AIR FILTER
FT FILTER TRAIN

GENERATORS
GDE DIESEL ENGINE GENERATOR
GGE GASOLINE ENGINE GENERATOR
GNE NATURAL GAS ENGINE GENERATOR
GNS STEAM DRIVEN GENERATOR

HEATERS (UNIT/SPACE WITH FANS)
HUG GAS HEATER
HUE ELECTRIC HEATER
HUI RADIANT (INFRARED) HEATER
HUS STEAM HEATER
HUW HOT WATER HEATER

HEAT EXCHANGERS
HXG HEAT EXCHANGER, WATER/GLYCOL TO AIR
HXO HEAT EXCHANGER, OIL TO WATER
HXS HEAT EXCHANGER, STEAM TO WATER
HXW HEAT EXCHANGER, WATER TO WATER
HXR HEAT EXCHANGER, REFRIGERANT

HUMIDIFIERS
HAS AIR HUMIDIFIER, STEAM SPRAY
HAW AIR HUMIDIFIER, WATER SPRAY

HVAC UNITS
ACR REFRIGERANT AIR CONDITIONING UNIT (DX COOLING ONLY)
CAE EVAPORATIVE AIR COOLER
CAV CONSTANT AIR VOLUME UNIT
CAW CHILLED WATER AIR CONDITIONING UNIT (COOLING ONLY)
HRC HEAT RECOVERY COIL
HV HEATING AND VENTILATING UNIT
HVA HEATING, VENTILATING, AND AIR CONDITIONING UNIT
VAV VARIABLE AIR VOLUME UNIT

PUMPS
PA ACID PUMP (CAUSTIC, CHEMICAL, ETC.)
PBF BOILER FEED PUMP
PC CONDENSATE PUMP (ALL TYPES)
PCT COOLING TOWER PUMP
PCW CHILLED WATER PUMP
PDH HOT WATER PUMP (POTABLE)
PDW DEIONIZED WATER PUMP
PHW HOT WATER HEATING PUMP
PF FIRE PUMP
PS SUMP PUMP (REGARDLESS OF USE)
PSR RAW SEWAGE PUMP
PV VACUUM PUMP
PWS WATER SPRAY PUMP
PWT WASTE TREATMENT PUMP

SCREENS
SF SCREEN, FIRE

TANKS
TCI TANK, CHEMICAL INJECTION
TCA COMPRESSED AIR TANK
THW HOT WATER STORAGE TANK
TSA TANK, SEPARATOR, AIR
TX EXPANSION TANK

VALVES
VM MOTORIZED VALVE
EAV EXHAUST AIR VALVE
SAV SUPPLY AIR VALVE
TCV TEMPERATURE CONTROL VALVE

WATER HEATERS
HWE ELECTRIC WATER HEATER
HWG GAS WATER HEATER

WATER PRESSURE REGULATORS
RPW WATER PRESSURE REGULATOR

PIPING SYMBOLS

SYMBOL	DESCRIPTION
	BALL VALVE
	BUTTERFLY VALVE
	CHECK VALVE
	CONTROL VALVE (TWO WAY)
	CONTROL VALVE (3-WAY)
	DIAPHRAGM VALVE
	GATE VALVE
	GATE VALVE (ANGLE)
	GATE VALVE (OS & Y)
	GLOBE VALVE
	GLOBE VALVE (ANGLE)
	HOSE BIBB W/VAC BREAKER
	NEEDLE VALVE
	PLUG VALVE COCK
	PRESSURE REDUCING VALVE
	RELIEF OR SAFETY VALVE
	SOLENOID VALVE
	AUTOMATIC AIR VENT
	MANUAL AIR VENT
	EXPANSION JOINT
	EXPANSION LOOP
	FLEXIBLE PIPE CONNECTION
	PIPE ANCHOR
	PRESSURE GAUGE WITH VALVE
	STEAM TRAP
	STRAINER
	STRAINER W/BLOW-OFF VALVE
	THERMOMETER
	PETE'S PLUG (PRESS/TEMP)
	TEMP GAUGE WITH VALVE
	CAP OR PLUG
	FLEXIBLE MECHANICAL COUPLING
	RIGID MECHANICAL COUPLING
	ELBOW - TURNED UP
	ELBOW - TURNED DOWN
	FLANGE CONNECTION
	REDUCER - CONCENTRIC
	REDUCER - ECCENTRIC - BOTTOM OF PIPE LEVEL
	REDUCER - ECCENTRIC - TOP OF PIPE LEVEL
	TEE - OUTLET UP
	TEE - OUTLET DOWN
	UNION
	END OF PIPE
	DIRECTION OF FLOW
	PITCH PIPING DOWN
	FLOW INDICATOR
	SIGHT GLASS
	PRESSURE GAUGE
	FLOOR DRAIN
	FLOOR DRAIN
	MAINTENANCE ACCESS
SD	SMOKE DETECTOR

PIPING SYMBOLS

RFND	REFRIGERANT DISCHARGE (HOT GAS)
RFNL	REFRIGERANT LIQUID
RFNR	REFRIGERANT RELIEF
RFNS	REFRIGERANT SUCTION
PWC	POTABLE WATER-COLD
PWH	POTABLE HOT WATER
PWHS	POTABLE HOT WATER SUPPLY
PWHR	POTABLE HOT WATER RETURN
D	DRAIN
CWR	CHILLED WATER RETURN
CWS	CHILLED WATER SUPPLY
HRR	HEAT RECOVERY RETURN
HRS	HEAT RECOVERY SUPPLY
HWR	HEATING WATER RETURN
HWS	HEATING WATER SUPPLY
PCWR	PROCESS COOLING WATER RETURN
PCWS	PROCESS COOLING WATER SUPPLY
ICW	INDUSTRIAL COLD WATER
CS	CHEMICAL SUPPLY
NPWMU	NON-POTABLE WATER-MAKEUP
NPHWS	NON-POTABLE HOT WATER SUPPLY
NPHWR	NON-POTABLE HOT WATER RETURN
CONLP	CONDENSATE LOW PRESSURE
CONHP	CONDENSATE HIGH PRESSURE
HGBP	HOT GAS BYPASS

DUCTWORK SYMBOLS

- DIRECTION OF FLOW
- ACOUSTICAL DUCT LINING
- 12"X20" — INSIDE DUCT SIZE (FIRST FIGURE IS SIDE SHOWN)
- SUPPLY DUCT SECTION, DOWN
- RETURN DUCT SECTION, DOWN
- SUPPLY DUCT SECTION, UP
- RETURN DUCT SECTION, UP
- EXHAUST DUCT SECTION, UP
- FLEXIBLE DUCT
- TURNING VANES
- INCLINED
  - * RISE (R)
  - * DROP (D)
- DAMPER
  - ** AD-AUTOMATIC DAMPER
  - ** BDD-BACKDRAFT DAMPER
  - ** FD-FIRE DAMPER
  - ** MOD-MOTOR OPERATED DAMPER
  - ** FSD-FIRE SMOKE DAMPER
  - ** VD-MANUAL VOLUME DAMPER
- OR — ACCESS DOOR IN DUCT
- SIZE "X" — FIRE DAMPER (NS)
- COMBINATION FIRE/SMOKE DAMPER (FSD) (NS)
- SUPPLY RECTANGULAR CEILING DIFFUSER
- RETURN, RELIEF, OR EXHAUST REGISTER OR GRILLE
- TRANSFER GRILLE

GENERAL NOTES

1. PROVIDE TURNING VANES IN ALL RECTANGULAR ELBOWS.
2. THE CFM OF EACH DIFFUSER, REGISTER, ETC. IS INDICATED AS A NUMBER NEXT TO THE SYMBOL DESIGNATION ON THE DRAWINGS.
3. COORDINATE ALL DUCTWORK AND HVAC PIPING WITH PLUMBING PIPING, FIRE PROTECTION PIPING, STRUCTURAL AND ELECTRICAL SYSTEMS AND PROVIDE NECESSARY OFFSETS TO AVOID CONFLICTS AND TO MAINTAIN EQUIPMENT ACCESS AND SERVICEABILITY.
4. SEAL ALL TRANSVERSE JOINTS, LONGITUDINAL SEAMS, DUCT WALL PENETRATIONS AND FITTING CONNECTIONS ON ALL DUCT SYSTEMS.
5. PROVIDE 2 FT. X 4 FT. CLEARANCE BELOW ALL MECHANICAL ITEMS REQUIRING MAINTENANCE. THESE MECHANICAL ITEMS INCLUDE TERMINAL HEATING COILS, BALANCING DAMPERS, AND VARIABLE AIR VOLUME BOXES.
6. ALL STRUCTURAL WELDED CONNECTIONS SHALL BE PERFORMED IN ACCORDANCE WITH LANL APPROVED WELDING SPECIFICATION AND AWS D1.1/D1.1M SPECIFICATION FOR WELDING STEEL. ALL TUBULAR CONNECTIONS SHAL BE INSPECTED PER AWS D1.1 TABLE 6.1. ALL NON-TUBULAR COMPONENTS SHALL BE INSPECTED AS CYCLICALLY LOADED NON-TUBULAR CONNECTIONS PER AWS D1.1 TABLE 6.1. ALL PIPE WELDED CONNECTIONS SHALL BE PERFORMED IN ACCORDANCE WITH LANL APPROVED WELDING SPECIFICATION AND THE APPLICABLE ASME PRESSURE PIPING CODE IDENTIFIED IN THE CONSTRUCTION SPECIFICATION.
7. DETAILS WITH MISSING WELD INFORMATION (FOR EXAMPLE, SIZE OR NUMBER OF PLACES) SHALL BE PROVIDED ON FABRICATION DRAWINGS FOR APPROVAL PRIOR TO FABRICATION.
8. FOR REFRIGERATION EQUIPMENT, COMPLETE A "REFRIGERATION APPLIANCE/EQUIPMENT INVENTORY FORM" AND SUBMIT TO RRES-MAQ, IN ACCORDANCE WITH LANL PROCEDURE RRES-MAQ-311. FOR DISPOSAL OF EXISTING REFRIGERATION UNITS, FOLLOW LANL PROCEDURE RRES-MAQ-312,R5.
9. FOR FUEL BURNING EQUIPMENT, COMPLETE A "FUEL BURNING APPLIANCE/EQUIPMENT INVENTORY FORM" AND SUBMIT TO ENV-MAQ.

EQUIPMENT SYMBOLS

- 12 — DIAMOND SYMBOL INDICATES EQUIPMENT NUMBER REFERS TO SPECIFIC EQUIPMENT IDENTIFIED IN MECHANICAL EQUIPMENT LIST
- 1 — ELLIPSE SYMBOL INDICATES A KEYED NOTE THE NUMBER REFERS TO A SPECIFIC NOTE LISTED IN THE KEYED NOTE LIST
- NOMINAL FACE DIMENSIONS LISTED ON FLOOR PLAN OR LISTED ON DIFFUSER/GRILLE SCHEDULE.
- 12"x12" A — LETTER IN SQUARE SYMBOL REFERS TO A SPECIFIC GRILLE OR REGISTER TYPE IDENTIFIED IN THE GRILLE/DIFFUSER SCHEDULE.
- 390 — CFM
- T — TEMPERATURE SENSOR/THERMOSTAT
- POC — POINT OF CONNECTION BETWEEN CURRENT WORK AND EXISTING
- POR — POINT OF REMOVAL BETWEEN CURRENT WORK AND EXISTING
- EXISTING EQUIPMENT TO BE REMOVED
- EXISTING EQUIPMENT TO REMAIN
- EXISTING PIPING TO BE REMOVED
- EXISTING PIPING TO REMAIN
- EQUIPMENT MAINTENANCE CLEARANCE
- CONDENSATE PUMP
- 1 — CIRCLE SYMBOL INDICATES UL LISTED FIRESTOP MATERIALS THE NUMBER REFERS TO A SPECIFIC NOTE LISTED IN EACH FIRESTOPPING DETAIL

NO	DATE	CLASS REV	ADC	DESCRIPTION	DWN	DES	CHKD	SUB	APP

AECOM

RLWTF-UP LOW LEVEL WASTE SUBPROJECT

MECHANICAL SYMBOL LEGEND AND GENERAL NOTES

BLDG. 261 TA-50

DRAWN	V DAVISON	4-7
DESIGN	B SHREEVE	
CHECKED	C MOYERS	
DATE	5/8/14	

SUBMITTED MANNY TARIN — APPROVED FOR RELEASE ED ARTIAGA

Los Alamos NATIONAL LABORATORY — PO Box 1663, Los Alamos, New Mexico 87545

CLASSIFICATION — REVIEWER — DATE

PROJECT ID 100761 — DRAWING NO C55867 — REV 0

SHEET M-0401

44 OF 69

CHARLES MOYERS NEW MEXICO 19838 REGISTERED PROFESSIONAL ENGINEER 05-01-14

File Location: P:\RLWTF LOW-LEVEL WASTE FACILITY\300 CAD\C55867 EFFLUENT STORAGE TANKS\SHEETS\13 MECHANICAL\55867-14-0401-R0.DWG
Plot By: SWEDA, VANESSA Plot Date: Friday, May 02, 2014

55867

PROCESS FLOW DIAGRAMS AND P&ID SYMBOLS (GENERAL INSTRUMENT OR FUNCTION SYMBOLS)

(ALL SYMBOLS SHOWN ARE NOT NECESSARILY USED ON THE DRAWINGS)

SYMBOL	DESCRIPTION
	VALVE
	ANGLE VALVE
	BUTTERFLY VALVE
	BALL VALVE
	3-WAY VALVE
	4-WAY VALVE
	GATE VALVE (OS & Y VALVE)
	DIAPHRAGM VALVE
	PRESSURE RELIEF
	DIAPHRAGM ACTUATOR
	TWO-WAY VALVE, FAIL CLOSED
	TWO-WAY VALVE, FAIL OPEN
	3-WAY VALVE W/DIAPHRAGM ACTUATOR
	4-WAY VALVE W/DIAPHRAGM ACTUATOR
	SPRING-OPPOSED SINGLE-ACTING ACTUATOR
	SPRING-OPPOSED DOUBLE-ACTING ACTUATOR
E H	ELECTROHYDRAULIC ACTUATOR
	HAND ACTUATOR OR HANDWHEEL
	RESTRICTION ORIFICE IN PROCESS LINE
	RESTRICTION ORIFICE DRILLED IN VALVE OR CIRCUIT SETTER
	FLOW STRAIGHTENING VANE
	DIAPHRAGM PRESSURE-BALANCED
	PRESSURE-REDUCING REGULATOR, SELF-CONTAINED, WITH HANDWHEEL ADJUSTABLE SET POINT
	PRESSURE REDUCING REGULATOR WITH EXTERNAL PRESSURE TAP
	DIFFERENTIAL-PRESSURE-REDUCING REGULATOR WITH INTERNAL AND EXTERNAL TAPS
	BACKPRESSURE REGULATOR, SELF-CONTAINED
	BACKPRESSURE REGULATOR WITH EXTERNAL PRESSURE TAP
PI	PRESSURE-REDUCING REGULATOR WITH INTEGRAL OUTLET PRESSURE RELIEF VALVE, AND OPTIONAL PRESSURE INDICATOR
PI	PRESSURE INDICATOR
	FLOW DIRECTION
	PRESSURE RELIEF OR SAFETY VALVE
	VACUUM RELIEF VALVE
	PRESSURE RELIEF OR SAFETY VALVE, STRAIGHT-THROUGH PATTERN, SPRING- OR WEIGHT-LOADED, OR WITH INTEGRAL PILOT
	RUPTURE DISK OR SAFETY HEAD FOR VACUUM RELIEF

SYMBOL	DESCRIPTION
	RUPTURE DISK OR SAFETY HEAD FOR PRESSURE RELIEF
X	PILOT LIGHT X=COLOR R=RED G=GREEN
	HOSE REEL
	FLEX CONNECTION (RUBBER)
	FLEX CONNECTION (STEEL BRAIDED)
	SINGLE PITOT TUBE OR PITOT VENTURI TUBE
	FLOW METER
	FLOW NOZZLE OR VENTURI
	REDUCER
	SCREWED CAP
	PIPE CAP
	HOSE CONNECTION
	FLANGED CONNECTION (PIPING OR EQUIP)
	FLOW ORIFICE FIXED
	STRAINER WITH VALVE
	Y-STRAINER
	COMPRESSED AIR
	DUCTED AIR FLOW FROM SPACE
	CAPPED AIR DUCT
	SEISMIC SHUT OFF VALVE
	GATE VALVE (OPEN)
	GATE VALVE (CLOSED)
	GLOBE VALVE (OPEN)
	GLOBE VALVE (CLOSED)
	NEEDLE VALVE (OPEN)
	NEEDLE VALVE (CLOSED)
	PLUG VALVE (OPEN)
	PLUG VALVE (CLOSED)
	BALL VALVE (OPEN)
	BALL VALVE (CLOSED)
	CHECK VALVE
	SPRING CHECK VALVE
	ANGLE VALVE (OPEN)
	ANGLE VALVE (CLOSED)
	SAFETY OR RELIEF VALVE (INLET PORT SHOWN CLOSED)
	THREE-WAY VALVE (CLOSED PORT DARKENED)
	FOUR-WAY VALVE (ARROWS INDICATE FLOW DIRECTION)
	BALL-CHECK VALVE
	DUAL PURGE VALVE
	ALARM VALVE
	AIR INTAKE FILTER
	ALARM
	PRESSURE PORT OPEN TO SPACE PRESSURE

SYMBOL	DESCRIPTION
	IN-LINE FILTER
181	DOUBLE BASKET STRAINER
	OPEN DRAIN (SHOWN)
XX	XX- DRAIN SYSTEM ANNOTATIONS
	DRAIN (PLAN VIEW)
	CLEANOUT (PLAN VIEW)
	SANITARY VENT
	SILENCER/MUFFLER
	SPACE PENETRATIONS
	FIXED LOUVERS
XX	TRAP XX ANNOTATES FUNCTION
L	LUBRICATOR
	55 GALLON DRUM
	THERMOSTATIC VENT
	SPRINKLER ALARM (WATER MOTOR GONG)
	FLOW ALARM VALVE
	PIPE INSULATION
	COOLING TOWER
	CHILLER
	HORIZONTAL CENTRIFUGAL PUMP
	CENTRIFUGAL FAN WITH VARIABLE INLET VANES
	BLOWER/CENTRIFUGAL FAN
	ROTARY PUMP
	VERTICAL WET PIT PUMP
	PROGRESSIVE CAVITY PUMP
	VERTICAL SUMP PUMP
	HEATER
	HEAT EXCHANGER
	BUBBLE GAUGE
	TEMPERATURE CONTROL VALVE

SYMBOL	DESCRIPTION
	AXIAL FAN
	AXIAL FAN WITH VARIABLE INLET VANES
	2-STAGE RECIPROCATING AIR COMPRESSOR
	SINGLE STAGE RECIPROCATING AIR COMPRESSOR
	2-STAGE ROTARY SCREW AIR COMPRESSOR
	RECIPROCATING PUMP
	PRESSURE VESSELS, VERTICAL (SHOWN) OR HORIZONTAL (TANKS, RECEIVERS, SEPARATORS, SUMPS ETC.)
	TANK
	HVAC COIL (A) E ELECTRIC HW HEATING WATER DX DIRECT EXPANSION NG INDIRECT GAS FIRED CH CHILLED WATER STM STEAM GL GLYCOL (B) HCL HEATING COIL CCL COOLING COIL HRC HEAT RECOVERY COIL
	UNIT HEATER (A) HW HEATING WATER DX DIRECT EXPANSION STM STEAM (B) HCL HEATING COIL
	PRESSURIZED GAS BOTTLE
	DOUBLE CONTAINMENT TANK
H	HUMIDIFIER
	MANUAL BALANCE DAMPER
	MULTI POINT PITOT TUBE ARRAY
MD/MC	DAMPER (NORMALLY OPEN) OR NORMALLY CLOSED
	EVAPORATIVE AIR COOLER
	OPPOSED BLADE DAMPER FOR HVAC EQUIPMENT
	BACKDRAFT DAMPER
	AXIAL FAN
TDV	TRIPLE DUTY VALVE

SYMBOL	DESCRIPTION
	SINGLE DUCT VARIABLE VOLUME BOX
A B	WING TYPE FACE AND BYPASS DAMPER (A) HW HEATING WATER DX DIRECT EXPANSION CH CHILLED WATER STM STEAM GL GLYCOL (B) HCL HEATING COIL CCL COOLING COIL HRC HEAT RECOVERY COIL
	COLLECTION BIN
	CYCLONE SEPARATOR
	FLUID RECOVERY PUMP
	DUAL SERVICE HEAT EXCHANGER
	MULTI BLADE DAMPER
	SINGLE BLADE DAMPER
M	MOTOR
	TEST PORT
	PILOT LIGHT
	SEPARATOR
	MIST ELIMINATOR
HEPA	HEPA FILTER
	CARBON ABSORBER FILTER
	ATMOSPHERIC FILTER

SYMBOL	DESCRIPTION
SD	SUCTION DIFFUSER
	PNEUMATIC-ELECTRIC TRANSDUCER
FT	FLOW TRANSMITTER
	BACK FLOW PREVENTER W/PRESSURE REDUCTION
	FIRESCREEN
	PREFILTER
	AIR COMPRESSOR W/TANK
	VACUUM PUMP
XXXX	ROOM NUMBER

NOTE: -▷◁- = NORMALLY OPEN (OPEN CENTER)
-▶◀- = NORMALLY CLOSED (SOLID CENTER)

NO	DATE	CLASS REV	ADC	DESCRIPTION	DWN	DES	CHKD	SUB	APP

AECOM

RLWTF-UP LOW LEVEL WASTE SUBPROJECT

PROCESS FLOW DIAGRAM AND P&ID SYMBOL LEGEND

BLDG. 261 TA-50

DRAWN	V DAVISON		
DESIGN	B SHREEVE		
CHECKED	C MOYERS		
DATE	5/8/14		

SUBMITTED MANNY TARIN

APPROVED FOR RELEASE ED ARTIGLIA

Los Alamos NATIONAL LABORATORY PO Box 1663 Los Alamos, New Mexico 87545

CLASSIFICATION | REVIEWER | DATE

PROJECT ID 100761

DRAWING NO C55867

SHEET M-0402

45 OF 69

REV 0

CHARLES MOYERS NEW MEXICO 16838 LICENSED PROFESSIONAL ENGINEER

03-07-14

12551

File Location: P:\RLWTF LOW-LEVEL WASTE FACILITY\300 DAV\55867 EFFLUENT STORAGE TANKS\SHEETS\15 MECHANICAL\55867-M-0402-RG.DWG
Plotted By: DAVISON, VANESSA; Plot Date: Friday, May 02, 2014

PROCESS FLOW AND PIPING AND INSTRUMENTATION DIAGRAM LEGEND

LINE TYPES

(ALL SYMBOLS SHOWN ARE NOT NECESSARILY USED ON THE DRAWINGS)

SYMBOL	DESCRIPTION
———	PROCESS FLOW LINE
———	INSTRUMENT SUPPLY OR CONNECTION TO PROCESS
—X—X—	UNDEFINED SIGNAL
—//—//—	PNEUMATIC SIGNAL
- - - - - -	ELECTRIC SIGNAL
—L—L—	HYDRAULIC SIGNAL
—×—×—	CAPILLARY TUBE
—∿—∿—	ELECTROMAGNETIC OR SONIC SIGNAL (GUIDED)
∿ ∿	ELECTROMAGNETIC OR SONIC SIGNAL (NOT GUIDED)
—○—○—	INTERNAL SYSTEM LINK (SOFTWARE OR DATA LINK
—○—○—	MECHANICAL LINK
OPTIONAL BINARY (ON-OFF) SYMBOLS	
—//—//—	PNEUMATIC BINARY SIGNAL
—·—·—·—	ELECTRIC BINARY SIGNAL
—E—E—	ELECTRICAL HEAT TRACING
—S—S—	STEAM HEAT TRACING
XX	FP – FLOOR PENETRATION RP – ROOF PENETRATION WP – WALL PENETRATION SB – SYSTEM BREAK

VALVE & INSTRUMENTATION FUNCTION IDENTIFIERS (SELECTED)

FIRST-LETTERS	INITIATING, MEASURED, OR CONTROLLED VARIABLE	CONTROLLERS			VALVES	READOUT DEVICE		SWITCHES AND ALARM DEVICES *			TRANSMITTERS			SOLENOIDS, RELAYS, COMPUTING DEVICES	PRIMARY ELEMENT	TEST POINT	WELL OR PROBE	VIEWING DEVICE, GLASS	SAFETY DEVICE	FINAL ELEMENT
		RECORDING	INDICATING	BLIND		RECORDING	INDICATING	HIGH**	LOW	COMB	RECORDING	INDICATING	BLIND							
A	ANALYSIS	ARC	AIC	AC		AR	AI	ASH	ASL	ASHL	ART	AIT	AT	AY	AE	AP	AW			AV
B	BURNER/ COMBUSTION	BRC	BIC	BC		BR	BI	BSH	BSL	BSHL	BRT	BIT	BT	BY	BE		BW	BG		BZ
C	CONDUCTIVITY		CIC	CC										CCD	CE					
D	USER'S CHOICE																			
E	VOLTAGE	ERC	EIC	EC		ER	EI	ESH	ESL	ESHL	ERT	EIT	ET	EY	EE					EZ
F	FLOW RATE	FRC	FIC	FC	FCV FICV	FR	FI	FSH	FSL	FSHL	FRT	FIT	FT	FY	FE	FP		FG		FV
FQ	FLOW QUANTITY	FQRC	FQIC			FQR	FQI	FQSH	FQSL			FQIT	FQT	FQY	FQE					FQV
FF	FLOW RATIO	FFRC	FFIC	FFC		FFR	FFI	FFSH	FFSL						FE					FFV
G	USER'S CHOICE																			
H	HAND		HIC	HC	HV					HS										HV
I	CURRENT	IRC	IIC			IR	II	ISH	ISL	ISHL	IRT	IIT	IT	IY	IE					IZ
J	POWER	JRC	JIC	ARC		JR	JI	JSH	JSL	JSHL	JRT	JIT	JT	JY	JE					JV
K	TIME	KRC	KIC	KC	KCV	KR	KI	KSH	KSL	KSHL	KRT	KIT	KT	KY	KE					KV
L	LEVEL	LRC	LIC	LC	LCV	LR	LI	LSH	LSL	LSHL	LRT	LIT	LT	LY	LE		LW	LG		LV
M	MOISTURE/ HUMIDITY						MI						MT							
N	USER'S CHOICE																			
O	USER'S CHOICE																			
P	PRESSURE VACUUM	PRC	PIC	PC	PCV	PR	PI	PSH	PSL	PSHL	PRT	PIT	PT	PY	PE	PTP			PSV PSE	PV
PD	PRESSURE DIFFERENTIAL	PDRC	PDIC	PDC	PDCV	PDR	PDI	PDSH	PDSL		PDRT	PDIT	PDT	PDY	PE	PTP				PDV
Q	QUANTITY	QRC	QIC			QR	QI	QSH	QSL	QSHL	QRT	QIT	QT	QY	QE					QZ
R	RADIATION	RRC	RIC	RC		RR	RI	RSH	RSL	RSHL	RRT	RIT	RT	RY	RE		RW			RZ
S	SPEED	SRC	SIC	SC	SCV	SR	SI	SSH	SSL	SSHL	SRT	SIT	ST	SY	SE					SV
T	TEMPERATURE	TRC	TIC	TC	TCV	TR	TI	TSH	TSL	TSHL	TRT	TIT	TT	TY	TE	TP	TW		TSE	TV
T	TEMPERATURE DIFFERENTIAL	TDRC	TDIC	TDC	TDCV	TDR	TDI	TDSH	TDSL		TDRT	TDIT	TDT	TDY	TDE	TDP TP	TDW TW			TDV
U	MULTIVARIABLE					UR	UI							UY						UV
V	MACHINERY VIBRATION ANALYSIS					VR	VI	VSH VS	VSL	VSHL	VRT	VIT	VT	VY	VE					VZ
W	WEIGHT FORCE	WRC	WIC	WC	WCV	WR	WI	WSH	WSL	WSHL	WRT	WIT	WT	WY	WE					WZ
WD	WEIGHT FORCE DIFFERENTIAL	WDRC	WDIC	WDC	WDCV	WDR	WDI	WDSH	WDSL		WDRT	WDIT	WDT	WDY	WDE					WDZ
X	USER'S CHOICE																			
Y	EVENT STATE PRESENCE		YIC	YC		YR	YI	YSH	YSL				YT	YY	YE					YZ
Z	POSITION DIMENSION	ZRC	ZIC	ZC	ZCV	ZR	ZI	ZSH	ZSL	ZSHL	ZRT	ZIT	ZT	ZY	ZE					ZV
ZD	GAUGING DEVIATION	ZDRC	ZDIC	ZDC	ZDCV	ZDR	ZDI	ZDSH	ZDSL		ZDRT	ZDIT	ZDT	ZDY	ZDE					ZDV

NOTE:
THIS TABLE IS NOT ALL-INCLUSIVE.

* A, ALARM, THE ANNUNCIATING DEVICE, MAY BE USED IN THE SAME FASHION AS S, SWITCH, THE ACTING DEVICE.

** THE LETTERS H AND L MAY BE OMITTED IN THE UNDEFINED CASE.

OTHER POSSIBLE COMBINATIONS:

FO	(RESTRICTION ORIFICE)	PFR	(RATIO)
FRK, HIK	(CONTROL STATIONS)	KQI	(RUNNING TIME INDICATOR)
FX	(ACCESSORIES)	QQI	(INDICATING COUNTER)
TJR	(SCANNING RECORDER)	WKIC	(RATE-OF-WEIGHT-LOSS CONTROLLER)
LLH	(PILOT LIGHT)	HMS	(HAND MOMENTARY SWITCH)

INSTRUMENT/EQUIPMENT LABELING LEGEND

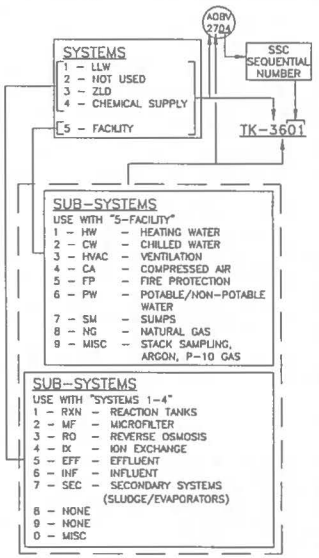

INSTRUMENT/FUNCTION SYMBOLS

	PRIMARY LOCATION NORMALLY ACCESSIBLE TO OPERATOR	FIELD MOUNTED	AUXILIARY LOCATION NORMALLY ACCESSIBLE TO OPERATOR	AUXILIARY LOCATION NORMALLY INACCESSIBLE TO OPERATOR
DISCRETE INSTRUMENTS	XX XXX	XX XXX	XX XXX	XX XXX
SHARED DISPLAY, SHARED CONTROL	XX XXX	XX XXX	XX XXX	XX XXX
COMPUTER FUNCTION	XX XXX	XX XXX	XX XXX	XX XXX
PROGRAMMABLE LOGIC CONTROL	XX XXX	XX XXX	XX XXX	XX XXX

XX XXX	FLOW INDICATOR	XX XXX XX XXX	INSTRUMENTS SHARING COMMON HOUSING
X XX	PANEL MOUNTED PATCHBOARD POINT 12		

INSTRUMENTATION IDENTIFICATION TABLE

J-1	COMPONENT FUNCTION NUMBER
J-2	COMPONENT SEQUENCE NUMBER
J-2A	COMPONENT SEQUENCE # CONT'D
J-3	VENDOR DESIGNATION
J-4	PANEL NUMBER
J-5	APPLICABLE NOTES
J-6	SYSTEM ACRONYM
J-7	ASME TEST SYMBOL FOR TEST ONLY OR TEST PLUS NORMAL USE
J-8	SET-POINT(S)
J-9	FUNCTION (SEE INSTRUMENT/FUNCTION SYMBOLS)

NOTE

INSTRUMENTATION FUNCTION IDENTIFIERS (J-1) AND FUNCTION SYMBOLS PER ANSI/ISA S5.1.

(ALL SYMBOLS SHOWN ARE NOT NECESSARILY USED ON THE DRAWINGS)

INSTRUMENT/FUNCTION SYMBOLS

SYMBOL	DESCRIPTION
X	P = PURGE OR FLUSHING DEVICE R = RESET FOR LATCH-TYPE ACTUATOR
X	S = SOLENOID D = DIGITAL P = PILOT T = TRAP M = MAGNETIC FLOWMETER SP = SET POINT
√	ROOT EXTRACTION
±	BIAS
X	MULTIPLY
>	HIGH SELECTING
<	LOW SELECTING
≯	HIGH LIMITING
≮	LOW LIMITING
K	PROPORTIONAL
-K	REVERSE PROPORTIONAL
+	SUMMING
÷	DIVIDING
CA-1	EQUIPMENT TAG

PLAN BREAKS & CONTINUATION FLAGS

SYMBOL	DESCRIPTION
Y# X OR X Y#	PIPE OR WIRE IS CONTINUED ON DRAWING X (INCLUDING SHEET NUMBER), GRID COORDINATE (Y#); FLOW IS TO THAT DRAWING.
X Y# OR Y# X	PIPE OR WIRE IS CONTINUED ON DRAWING X (INCLUDING SHEET NUMBER), GRID COORDINATE (Y#); FLOW IS FROM THAT DRAWING.
X Y#	PIPE OR WIRE IS CONTINUED ON DRAWING X (INCLUDING SHEET NUMBER), GRID COORDINATE (Y#); FLOW IS IN BOTH DIRECTIONS

INTERLOCK SYMBOL

I X — INTERLOCK

INTERLOCK NUMBER

CHARLES MOYERS — NEW MEXICO — 18939 — LICENSED PROFESSIONAL ENGINEER — 05-01-14

NO	DATE	CLASS REV	ADC	DESCRIPTION	DWN	DES	CHKD	SUB	APP

AECOM

RLWTF-UP LOW LEVEL WASTE SUBPROJECT

PROCESS FLOW DIAGRAM AND P&ID SYMBOL LEGEND

BLDG. 261 TA-50

DRAWN	V DAWSON	DRAWN	5/8/14
DESIGN	B SHREEVE		
CHECKED	C MOYERS		
DATE	5/8/14		

SUBMITTED: MANNY TARIN

APPROVED FOR RELEASE: ED ARTIGLIA

Los Alamos NATIONAL LABORATORY — PO Box 1663, Los Alamos, New Mexico 87545

SHEET M-0403

46 OF 69

CLASSIFICATION | REVIEWER | DATE

PROJECT ID 100761 | DRAWING NO C55867 | REV 0

C55867 : 12555

File Location: P:\RLWTF LOW-LEVEL WASTE FACILITY\300 CAD\C55867 EFFLUENT STORAGE TANKS\SHEETS\15 MECHANICAL\55867_M-0403-R0.DWG
Plotted By: DAWSON, VANESSA; Plot Date: Friday, May 02, 2014

GENERAL NOTES

1. IF THIS SHEET IS NOT 24"X36", THEN IT IS A REDUCED SIZE PLOT. USE THE GRAPHIC SCALE ACCORDINGLY.
2. SEE SHEETS M-0401 THROUGH M-0403 FOR GENERAL MECHANICAL NOTES, LEGEND AND ABBREVIATIONS.
3. SEE DRAWING C55864, SHEETS M-7000 THROUGH M-7006 FOR MECHANICAL EQUIPMENT LIST.
4. REFRIGERANT PIPING SHALL BE IN ACCORDANCE WITH ASME B31.5.
5. SUPPORTS AND/OR HANGERS SHALL BE DESIGNED PER SPECIFICATION 220548.

KEYED NOTES

(1) MOUNT INDOOR UNIT 6'-8" AFF AND INSTALL IN ACCORDANCE WITH MANUFACTURER'S WRITTEN INSTRUCTIONS.

(2) ELECTRICAL HEATER UNIT BDE-5343 MOUNTED 1'-6" AFF.

(3) MAINTAIN THE MANUFACTURER RECOMMENDED CLEARANCES DURING INSTALLATION OF THE OUTDOOR UNIT ACR-5329.

(4) ROUTE CONDENSATE FROM ACR-5329 AND SPILL TO DRAIN.

(5) PROVIDE CONDENSING UNIT PAD, MINIMUM 16X36X3, DIVERSITECH UC1636-3. ATTACH CONDENSING UNIT TO PAD WITH (4) 1/4" THROUGH BOLTS, WASHERS, AND NUTS.

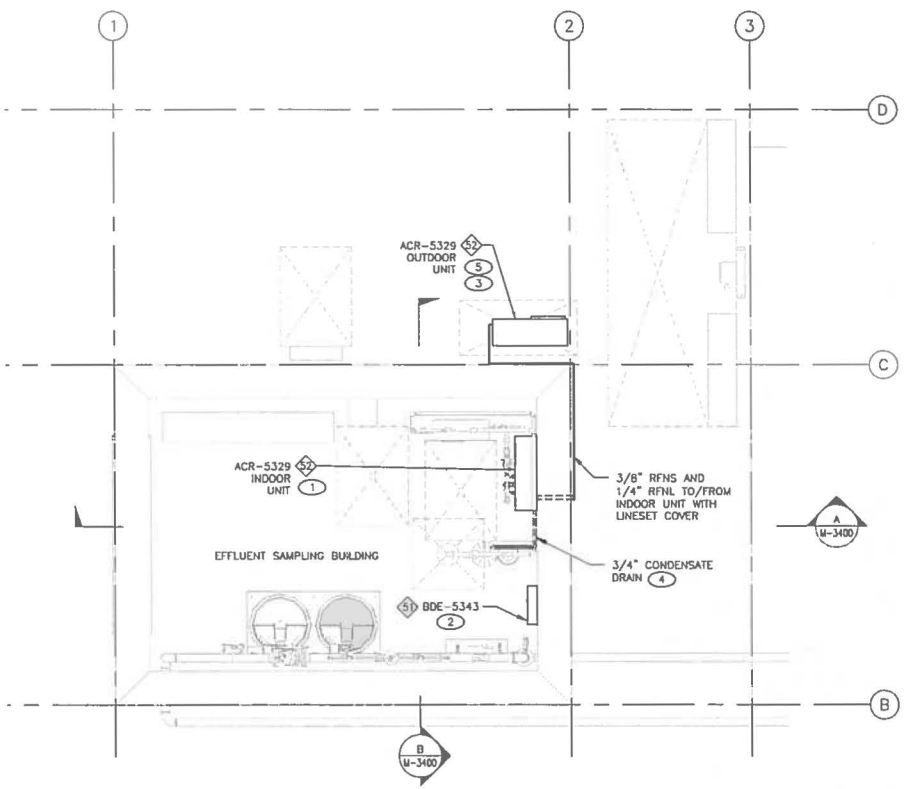

HVAC PLAN

1/2"=1'-0"

NO	DATE	CLASS REV	ADC	DESCRIPTION	DWN	DES	CHKD	SUB	APP

AECOM

RLWTF-UP LOW LEVEL WASTE SUBPROJECT

HVAC PLAN

DRAWN	V DAVISON	VVD
DESIGN	B SHRIEVE	BLS
CHECKED	C MOYDRS	CM
DATE	5/8/14	

BLDG. 261 TA-50

SUBMITTED MANNY TARIN

APPROVED FOR RELEASE ED ARTIGLIA

Los Alamos NATIONAL LABORATORY PO Box 1663 Los Alamos, New Mexico 87545

SHEET M-1400

47 OF 69

CLASSIFICATION | REVIEWER | DATE

PROJECT ID 100761 | DRAWING NO C55867 | REV 0

CHARLES MOYERS NEW MEXICO 18639 REGISTERED PROFESSIONAL ENGINEER 05-08-14

95871 :

File Location: P:\RLWTF LOW-LEVEL WASTE FACILITY\300 CAD\C55867 EFFLUENT STORAGE TANKS\SHEETS\13 MECHANICAL\55867-M-1400-R0.DWG
Plotted By: DAWSON, WARREN Plot Date: Friday, May 02, 2014

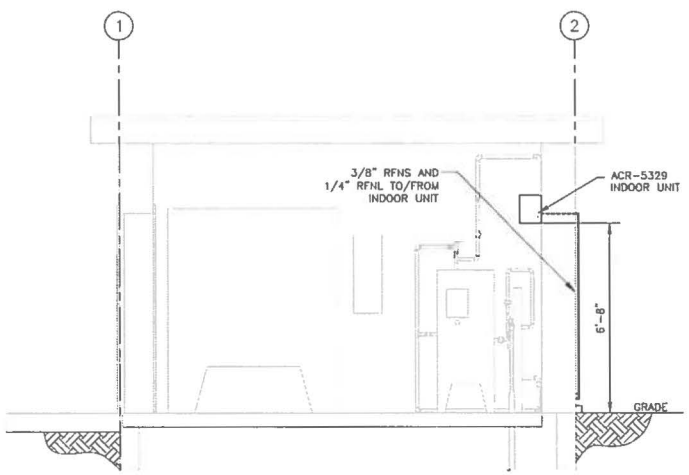

A M-1400 HVAC SECTION – SAMPLE BUILDING NORTH

1/2"=1'-0"

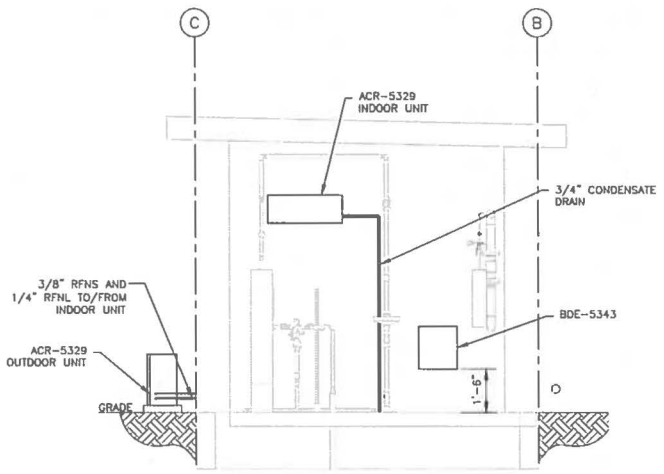

B M-1400 HVAC SECTION – SAMPLE BUILDING EAST

1/2"=1'-0"

GENERAL NOTES

1. IF THIS SHEET IS NOT 24"X36", THEN IT IS A REDUCED SIZE PLOT. USE THE GRAPHIC SCALE ACCORDINGLY.
2. SEE SHEETS M-0401, M-0402 AND M-0403 FOR GENERAL MECHANICAL NOTES, LEGEND AND ABBREVIATIONS.
3. SEE DRAWING C55864, SHEETS M-7000 THROUGH M-7006 FOR MECHANICAL EQUIPMENT LIST.
4. ELEVATION 100'-0" CORRESPONDS TO MEAN SEA LEVEL ELEVATION OF 7265.00 FEET.

NO	DATE	CLASS REV	ADC	DESCRIPTION	DWN	DES	CHKD	SUB	APP

AECOM

RLWTF-UP LOW LEVEL WASTE SUBPROJECT

HVAC SECTION

BLDG. 261 TA-50

DRAWN	V DAVISON
DESIGN	B SHREEVE
CHECKED	C MOYERS
DATE	5/8/14

SUBMITTED: MANNY TARIN

APPROVED FOR RELEASE: ED ARTIGLIA

Los Alamos NATIONAL LABORATORY PO Box 1663 Los Alamos, New Mexico 87545

SHEET M-3400

48 OF 69

CLASSIFICATION | REVIEWER | DATE

PROJECT ID 100761 | DRAWING NO C55867 | REV 0

CHARLES MOYERS NEW MEXICO 15830 LICENSED PROFESSIONAL ENGINEER

05-08-14

File Location: P:\RLWTF LOW-LEVEL WASTE FACILITY\500 CAD\C55867 EFFLUENT STORAGE TANKS\SHEETS\15 MECHANICAL\55867-M-3400-R0.DWG
Plotted By: DAVISON, VANESSA Plot Date: Friday, May 02, 2014

12657

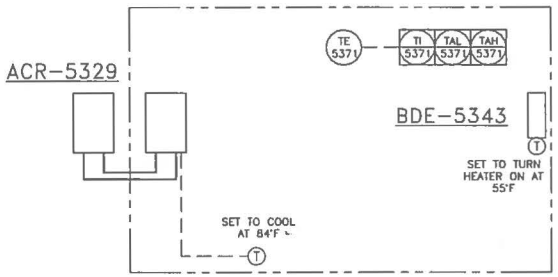

AIR FLOW SCHEMATIC
SCALE: NONE

SEQUENCE OF OPERATIONS

DUCTLESS SPLIT SYSTEM AIR CONDITIONER

RUN CONDITIONS:
- THE UNIT SHALL MAINTAIN AN 84°F (ADJ.) COOLING SETPOINT.

BASEBOARD HEATER, ELECTRIC (BDE-5343)

RUN CONDITIONS – SCHEDULED:
THE UNIT SHALL BE AVAILABLE CONTINUOUSLY:

- THE UNIT SHALL MAINTAIN A HEATING SETPOINT OF 55°F (ADJ).

ALARMS SHALL BE PROVIDED AS FOLLOWS:
- LOW ZONE TEMPERATURE IF THE ZONE TEMPERATURE IS LESS THAN HEATING SETPOINT BY A USER DEFINABLE AMOUNT (ADJ).
- HIGH ZONE TEMPERATURE IF THE ZONE TEMPERATURE IS GREATER THAN COOLING SETPOINT BY A USER DEFINABLE AMOUNT (ADJ).

NO	DATE	CLASS REV	ADC	DESCRIPTION	DWN	DES	CHKD	SUB	APP

AECOM

RLWTF-UP LOW LEVEL WASTE SUBPROJECT

AIR FLOW DIAGRAM AND SEQUENCE OF OPERATIONS

BLDG. 261 TA-50

DRAWN	V DAVISON
DESIGN	S MOORE
CHECKED	C MOYERS
DATE	5/8/14

SUBMITTED: MANNY TARIN
APPROVED FOR RELEASE: ED ARTIGLIA

Los Alamos NATIONAL LABORATORY PO Box 1663 Los Alamos, New Mexico 87545

SHEET M-6400
49 OF 69

CLASSIFICATION | REVIEWER | DATE

PROJECT ID 100761 | DRAWING NO C55867 | REV 0

CHARLES MOYERS NEW MEXICO 16939 LICENSED PROFESSIONAL ENGINEER
05-08-14

File Location: P:\RLWTF LOW-LEVEL WASTE FACILITY\500 CAD\C55867 EFFLUENT STORAGE TANKS\SHEETS\15 MECHANICAL\55867-M-6400-R0.DWG
Plotted By: DWIGGIN, WAESSA; Plot Date: Friday, May 02, 2014

12658

ELECTRICAL SYMBOL LEGEND

(ALL SYMBOLS SHOWN ARE NOT NECESSARILY USED ON THE DRAWINGS)

ELECTRICAL SYMBOLS

SYMBOL	DESCRIPTION
	EXISTING CONSTRUCTION
	EXISTING TO BE REMOVED
	FUTURE CONSTRUCTION
	NEW CONSTRUCTION
	ELECTRICAL SIGNAL
	NETWORKING DATA LINK
	HOMERUN CONDUIT
	GROUND
	PHASE
	SWITCHED
	NEUTRAL
	INSTRUMENT GROUND
	FLEXIBLE CONDUIT
	CONDUIT DOWN
	CONDUIT UP
	CONDUIT SEAL
E	CONDUIT CAP
480V / 600A	BUSWAY WITH DESCRIPTION
G	GROUNDING CONDUCTOR
	CABLE TRAY
J	CEILING MOUNTED JUNCTION BOX
J	WALL MOUNTED JUNCTION BOX
	DUPLEX RECEPTACLE OUTLET
	SINGLE RECEPTACLE OUTLET
	DOUBLE DUPLEX RECEPTACLE
GFCI WP	GROUND FAULT CIRCUIT INTERRUPTER DUPLEX OUTLET WITH WEATHERPROOF COVER
	SPECIAL PURPOSE OUTLET – USE SUBSCRIPT TO IDENTIFY TYPE IN SPECS
	FLOOR RECEPTACLE OUTLET – USE SUBSCRIPT TO IDENTIFY TYPE IN SPECS
	RECEPTACLE RACEWAY
* = a	SINGLE POLE SWITCH – CONTROLS FIXTURES INDICATED
* = 2	DOUBLE POLE SWITCH
* = 3	THREE-WAY SWITCH
* = 4	FOUR-WAY SWITCH
* = WP	WEATHERPROOF SWITCH
* = K	KEY OPERATED SWITCH
* = T	MOTOR RATED SWITCH, WITH THERMAL OVERLOAD PROTECTION
LC	LIGHTING CONTROLLER
600	DIMMER SWITCH – NUMBER INDICATES WATTAGE
M	OCCUPANCY SENSING SWITCH
P	PHOTOCELL
6 30	REMOTE CONTROL SWITCH 6 POLE, 30 AMPS
A 1, a	FLUORESCENT LUMINAIRE A = FIXTURE TYPE 1 = CIRCUIT NUMBER a = SWITCH CONTROLLING FIXTURE
A 1, a	WALL MOUNTED FLUORESCENT LUMINAIRE A = FIXTURE TYPE 1 = CIRCUIT NUMBER a = SWITCH CONTROLLING FIXTURE

SYMBOL	DESCRIPTION
A 1, a	CEILING MOUNTED LUMINAIRE A = FIXTURE TYPE 1 = CIRCUIT NUMBER a = SWITCH CONTROLLING FIXTURE
A 1, a	WALL MOUNTED LUMINAIRE A = FIXTURE TYPE 1 = CIRCUIT NUMBER a = SWITCH CONTROLLING FIXTURE
A 1, a	EMERGENCY LUMINAIRE A = FIXTURE TYPE W/ "EL" 1 = CIRCUIT NUMBER a = SWITCH CONTROLLING FIXTURE
A	LIGHT POLE WITH LUMINAIRE A = FIXTURE TYPE
A	EMERGENCY LIGHTING UNIT RECHARGEABLE TYPE A = FIXTURE TYPE
A 1	CEILING MOUNTED EXIT SIGN – ARROW AS INDICATED A = FIXTURE TYPE 1 = CIRCUIT NUMBER
A 1	TWO FACED EXIT SIGN A = FIXTURE TYPE 1 = CIRCUIT NUMBER
A 1	WALL MOUNTED EXIT SIGN A = FIXTURE TYPE 1 = CIRCUIT NUMBER
	SWITCHGEAR, POWER PANELBOARD LIGHTING PANELBOARD
	CLEAR SPACE (WORKING CLEARANCE OR FUTURE)
T	TRANSFORMER
40A / 60A F	FUSIBLE DISCONNECT 40A – INDICATES FUSE SIZE 60A – INDICATES SWITCH SIZE
20 J	NON-FUSIBLE DISCONNECT SWITCH – NUMBER INDICATES SWITCH SIZE
2 20	COMBINATION MAGNETIC STARTER AND CIRCUIT BREAKER 2 – INDICATES NEMA STARTER SIZE 20 – INDICATES CIRCUIT BREAKER TRIP
2	MAGNETIC STARTER – NUMBER INDICATES NEMA STARTER SIZE
SS 3	SOFT STARTER – NUMBER INDICATES NEMA STARTER SIZE
ASD	ADJUSTABLE SPEED DRIVE
PB	PULL BOX
	T–TELEPHONE RACEWAY F–FIRE ALARM RACEWAY FO–FIBER OPTIC RACEWAY C–CONTROL RACEWAY E–ELECTRICAL RACEWAY
	KEYED NOTE DESIGNATION
	ELECTRICAL EQUIPMENT DESIGNATION
	MECHANICAL EQUIPMENT DESIGNATION
#	NAMEPLATE DESIGNATION
	PART BUBBLE
XX	LIGHTNING PROTECTION SYSTEM AIR TERMINAL XX = LENGTH IN INCHES
	CONNECTION POINT (NS)
	EXOTHERMIC BOND OR COMPRESSION FITTING CONNECTIONS (NS)

SYMBOL	DESCRIPTION
LP–xx	PANELBOARD WITH MAIN CIRCUIT BREAKER
100 LP–xx	PANELBOARD WITH MAIN LUGS 100 INDICATES PANEL SIZE
100/3	MEDIUM VOLTAGE DISCONNECT SWITCH
600	MEDIUM VOLTAGE DRAWOUT CIRCUIT BREAKER
1000 / 1200	DRAWOUT CIRCUIT BREAKER (TRIP/FRAME)
7 MCP	MOTOR CIRCUIT PROTECTOR
300 / 400	CIRCUIT BREAKER (TRIP/FRAME)
480 Δ / 208Y/120	500 KVA TRANSFORMER – DELTA–WYE CONNECTION
	SURGE PROTECTION (MOV)
3000/5	CURRENT TRANSFORMER – NUMBERS INDICATE RATIO AND QUANTITY
J	POTENTIAL TRANSFORMER – NUMBER INDICATES QUANTITY
5A	FUSE
A5	FUSIBLE ELEMENT
A5	FUSIBLE DISCONNECT SWITCH
	GROUND
100	CIRCUIT BREAKER BUSWAY PLUG (NUMBER INDICATES C/B TRIP)
N E L	AUTOMATIC TRANSFER SWITCH
R1	RELAY #1
CR	CONTROL RELAY (NS)
12,700	AVAILABLE 3 PHASE FAULT CURRENT (RMS SYM–AMPS)
	BUS PLUG CIRCUIT BREAKER
	PLUG–IN CONNECTOR
	NORMALLY CLOSED CONTACT
	REMOTE NORMALLY CLOSED CONTACT (NS)
	NORMALLY OPEN CONTACT
	REMOTE NORMALLY OPEN CONTACT (NS)
	PROTECTIVE RELAY, SOLENOID COIL
	OVERLOAD RELAY
	CONNECTION
	CONNECTION

SYMBOL	DESCRIPTION
M	MOTOR (NUMBER INDICATES HP)
XX	LOAD (GROUP OR NON MOTOR)
SCR	SILICON CONTROLLED RECTIFIER–BASED CONTROLLER
CAM J2	CONTINUOUS AIR MONITOR J2 IDENTIFICATION NUMBER
FAS J2	FIXED AIR SAMPLER J2 IDENTIFICATION NUMBER

INSTRUMENT/FUNCTION SYMBOLS

	PRIMARY LOCATION NORMALLY ACCESSIBLE TO OPERATOR
DISCRETE INSTRUMENTS	J1 / J2
SHARED DISPLAY, SHARED CONTROL	J1 / J2

ABBREVIATIONS

(ALL ABBREVIATIONS SHOWN ARE NOT NECESSARILY USED ON THE DRAWINGS)

A	AMPS
AL	ALUMINUM
AFF	ABOVE FINISHED FLOOR
AGL	ABOVE GRADE LEVEL
BAS	BUILDING AUTOMATION SYSTEM
C	CONDUIT
CAB	CABINET
CAM	CONTINUOUS AIR MONITOR
CAV	CONSTANT AIR VOLUME VALVE
CU	COPPER
DS	DISCONNECT SWITCH
E	ELECTRICAL
ES	EMERGENCY STOP
EWS	ENGINEERING WORKSTATION
EXST	EXISTING
FAS	FIXED AIR SAMPLER
FCS	FACILITY CONTROL SYSTEM
FO	FIBEROPTIC
FP	FIRE PROTECTION
FSD	FIRE SMOKE DAMPER
GND	GROUND
GFI	GROUND FAULT INTERRUPTER
HVAC	HEATING VENTILATING AND AIR CONDITIONING
HWR	HOT WATER RETURN
HWS	HOT WATER SUPPLY
IJB	INSTRUMENT JUNCTION BOX

ABBREVIATIONS (CONTINUED)

KCMIL	THOUSAND CIRCULAR MIL
KV	KILOVOLTS
KVA	KILOVOLT–AMPS
KW	KILOWATTS
LP	LIGHTING PANEL
MCC	MOTOR CONTROL CENTER
MCS	MOTOR COMBINATION STARTER
MOV	METAL OXIDE VARISTER
MR	MULTI RATIO
MV	MEDIUM VOLTAGE
NS	NOT STANDARD
OWS	OPERATOR WORK STATION
PJB	POWER JUNCTION BOX
PP	POWER PANEL
RLWTF	RADIOACTIVE LIQUID WASTE TREATMENT FACILITY
SPD	SURGE PROTECTION DEVICE
SS	SOFT START
SWBD	SWITCHBOARD
SWGR	SWITCHGEAR
T	TELECOMMUNICATION
THK	THICK
TR	DRY TYPE TRANSFORMER
UL	UNDERWRITERS LABORATORIES
V	VOLTS
WP	WEATHERPROOF
XFMR	TRANSFORMER

NO	DATE	CLASS REV	ADC	DESCRIPTION	DWN	DES	CHKD	SUB	APP

AECOM

RLWTF–UP LOW LEVEL WASTE SUBPROJECT

SYMBOL LEGEND AND ABBREVIATIONS

DRAWN	V DAVISON
DESIGN	S MOORE
CHECKED	D MOE
BLDG. 261	TA–50
DATE	5/8/14
SUBMITTED MANNY TARIN	APPROVED FOR RELEASE ED ARTIGLIA
SHEET	E–0401
	50 OF 69

Los Alamos NATIONAL LABORATORY — PO Box 1663, Los Alamos, New Mexico 87545

CLASSIFICATION | REVIEWER | DATE

PROJECT ID: 100761 | DRAWING NO: C55867 | REV: 0

Eugene David Moe, New Mexico, 21389, Professional Engineer, 07 May 2014

Pw Location: P:\RLWTF LOW-LEVEL WASTE FACILITY\WDS CAD\SUBMIT EFFLUENT STORAGE TANKS\SHEET\N14 ELECTRICAL\55867-E-0401-R0.DWG
Plotted By: DAVISON, VANESSA; Plot Date: Friday, May 02, 2014

65927

GENERAL NOTES

1. IF THIS SHEET IS NOT 24"X36", THEN IT IS A REDUCED SIZE PLOT. USE THE GRAPHIC SCALE ACCORDINGLY.
2. SEE SHEET E-0401 FOR SYMBOLS AND ABBREVIATIONS.
3. SEE SHEET E-1402 FOR LIGHTING PLANS.
4. SEE DRAWING C55864 SHEETS E-7109 AND E-7110 FOR CONDUIT AND WIRE SCHEDULES.

KEYED NOTES

(1) UNDERGROUND FEEDER DUCT BANK TO LLW TREATMENT BUILDING SEE DRAWING C55864 SHEET E-1000.

(2) EFFLUENT SAMPLE BUILDING POWER PANEL IS SUB-FED FROM LLW TREATMENT BUILDING SWBD-A. SEE DRAWING C55864 SHEET E-6001 AND DRAWING C55864 SHEET E-7100 FOR ONE-LINE DIAGRAM AND PANEL SCHEDULE.

(3) PROVIDE SIZE 1 REMOTE COMBINATION STARTER WITH INTEGRAL DISCONNECT SWITCH FOR PUMP MOTOR.

(4) PROVIDE TANK HEATER CONTROL PANEL CHROMALOX MODEL 4224 OR APPROVED EQUAL WITH 480V 3-PHASE SCR CONTROLS, INDICATING AND OVER TEMPERATURE CONTROLLERS AND DISCONNECT SWITCH. SEE SHEET E-6403 FOR WIRING DIAGRAM.

(5) PROVIDE 15KVA TRANSFORMER AND PANELBOARD. SQUARE D MINI POWER ZONE OR APPROVED EQUAL. SEE DRAWING C55864-E-6001 AND DRAWING C55864 SHEET E-7102 FOR ONE-LINE DIAGRAM AND PANEL SCHEDULE.

(6) PROVIDE TWO (2) GFCI NEMA 5-15R RECEPTACLES TO POWER INTEGRAL PUMP AND CONTROLLER PER MANUFACTURERS INSTRUCTIONS.

(7) DISCONNECT IS FOR BOTH COMPONENTS OF SPLIT SYSTEM.

(8) HEAT TRACE. SEE SHEET E-1403 FOR HEAT TRACE PLAN.

(9) GROUNDING ELECTRODE GROUND BAR EXTENSION. SEE DRAWING C55864 SHEET E-6102.

(10) PROVIDE SNAP SWITCH IN WATER PROOF BOX AND COVER.

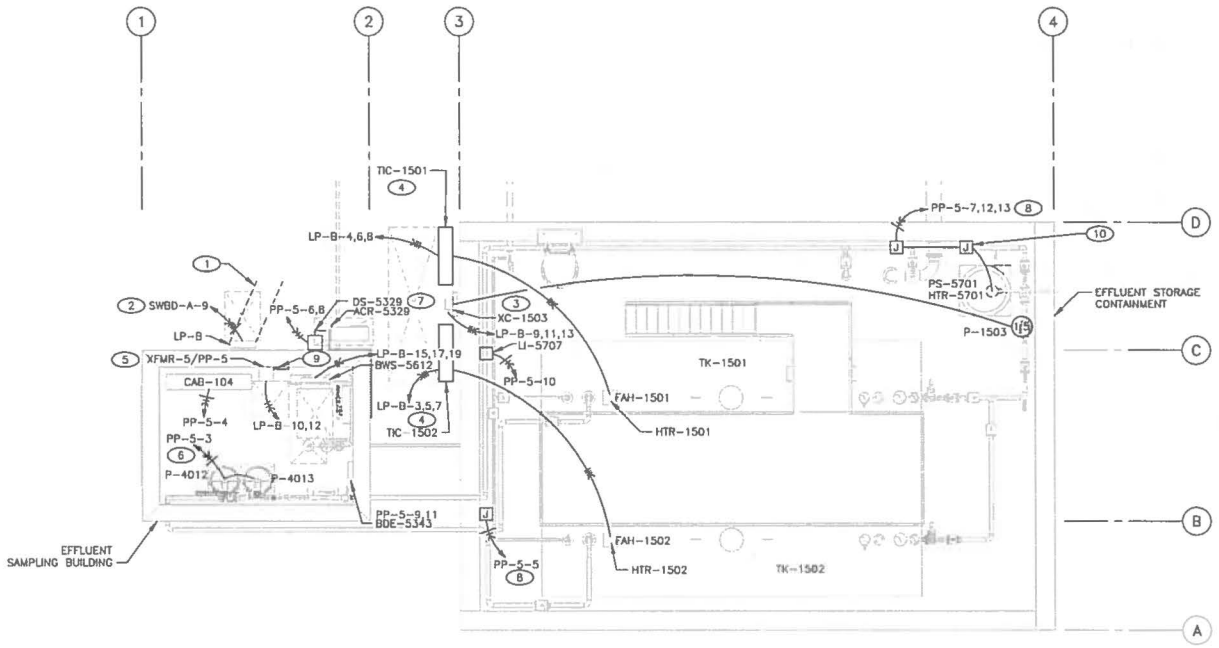

POWER PLAN

1/4"=1'-0"

NO	DATE	CLASS REV	ADC	DESCRIPTION	DWN	DES	CHKD	SUB	APP

AECOM

RLWTF-UP LOW LEVEL WASTE SUBPROJECT

POWER PLAN

BLDG. 261 TA-50

DRAWN	V DAVISON	DATE	5/8/14
DESIGN	S MOORE		
CHECKED	G MOE		

SUBMITTED: MANNY TARIN

APPROVED FOR RELEASE: ED ARTIGLIA

Los Alamos NATIONAL LABORATORY — PO Box 1663, Los Alamos, New Mexico 87545

SHEET E-1400

51 OF 69

CLASSIFICATION | REVIEWER | DATE

PROJECT ID 100761 | DRAWING NO C55867 | REV 0

EUGENE DAVID MOE — NEW MEXICO — 21369 — PROFESSIONAL ENGINEER — 05/07/2014

File Location: P:\RLWTF LOW-LEVEL WASTE FACILITY\900 CAD\C55867 EFFLUENT STORAGE TANKS\SHEETS\18 ELECTRICAL\55867-E-1400-R0.DWG
Plotted By: DAWSON, WARREN Plot Date: Friday, May 02, 2014

12560 : 1

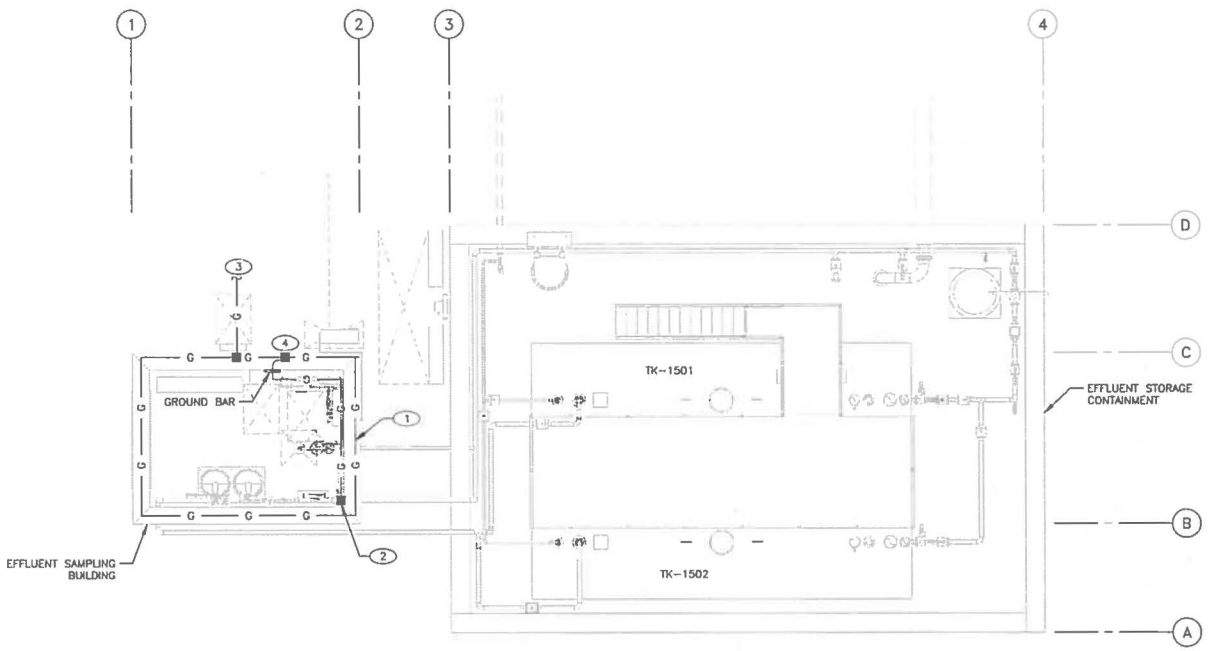

GROUNDING PLAN

0' 1' 2' 4' 6' 8'
1/4"=1'-0"

GENERAL NOTES

1. IF THIS SHEET IS NOT 24"X36", THEN IT IS A REDUCED SIZE PLOT. USE THE GRAPHIC SCALE ACCORDINGLY.
2. ALL GROUNDING ELECTRODE CONDUCTORS ARE #4/0 AWG UNLESS OTHERWISE SPECIFIED.
3. SEE DRAWING C88584 SHEET E-6102 FOR GROUNDING DIAGRAM, REQUIREMENTS AND CONDUCTOR SIZES.

KEYED NOTES

1. INSTALL CONCRETE ENCASED ELECTRODE PER REQUIREMENT ON DRAWING C55864, SHEET E-6102. PROVIDE 5 FEET OF BARE COPPER A.F.F. FOR BONDING MAIN GROUNDING ELECTRODE BAR TO GROUNDING ELECTRODE SYSTEM.
2. BOND METALLIC PIPING SYSTEMS TO MAIN GROUNDING ELECTRODE BAR. (REF DWG C55864, SHEET E-6102).
3. BOND FEEDER DUCT BANK GROUNDING CONDUCTOR TO BUILDING GROUNDING ELECTRODE SYSTEM.
4. BOND GROUNDING ELECTRODE GROUND BAR TO BUILDING GROUNDING ELECTRODE SYSTEM.

NO	DATE	CLASS REV	ADC	DESCRIPTION	DWN	DES	CHKD	SUB	APP

AECOM

RLWTF-UP LOW LEVEL WASTE SUBPROJECT

GROUNDING PLAN

BLDG. 261 TA-50

DRAWN	V DAVISON
DESIGN	S MOORE
CHECKED	G MOE
DATE	5/8/14

SUBMITTED: MANNY TARIN

APPROVED FOR RELEASE: ED ARTIGLIA

Los Alamos NATIONAL LABORATORY PO Box 1663 Los Alamos, New Mexico 87545

SHEET E-1401

52 OF 69

CLASSIFICATION | REVIEWER | DATE

PROJECT ID 100761 | DRAWING NO C55867 | REV 0

EUGENE DAVID MOE NEW MEXICO 21389 PROFESSIONAL ENGINEER

File Location: P:\RLWTF LOW-LEVEL WASTE FACILITY\500 CAD\C55867 EFFLUENT STORAGE TANKS\SHEETS\18 ELECTRICAL\55867-E-1401-R0.DWG
Plotted By: DAVISON, VANESSA; Plot Date: Friday, May 02, 2014

19561

GENERAL NOTES

1. IF THIS SHEET IS NOT 24"X36", THEN IT IS A REDUCED SIZE PLOT. USE THE GRAPHIC SCALE ACCORDINGLY.
2. SEE DRAWING C55864 SHEET E-7103 FOR LUMINAIRE AND LIGHTING CONTROL SCHEDULE.
3. SEE DRAWING C55864 SHEETS E-7109 AND E-7110 FOR CONDUIT AND WIRE SCHEDULES.

KEYED NOTES

1. INSTALL LUMINAIRE "B" 9'-0" AFF. SEE DRAWING C55865, SHEET E-5208 FOR INSTALLATION DETAIL.
2. INSTALL LUMINAIRE "K" 8'-6" AFF. FIXTURE SHALL BE PROVIDED WITH INTEGRAL PHOTO SENSOR CONTROL.
3. INSTALL LUMINAIRE "K" 6" BELOW TOP OF EFFLUENT STORAGE CONTAINMENT WALL. FIXTURE SHALL BE PROVIDED WITH INTEGRAL PHOTO SENSOR CONTROL.

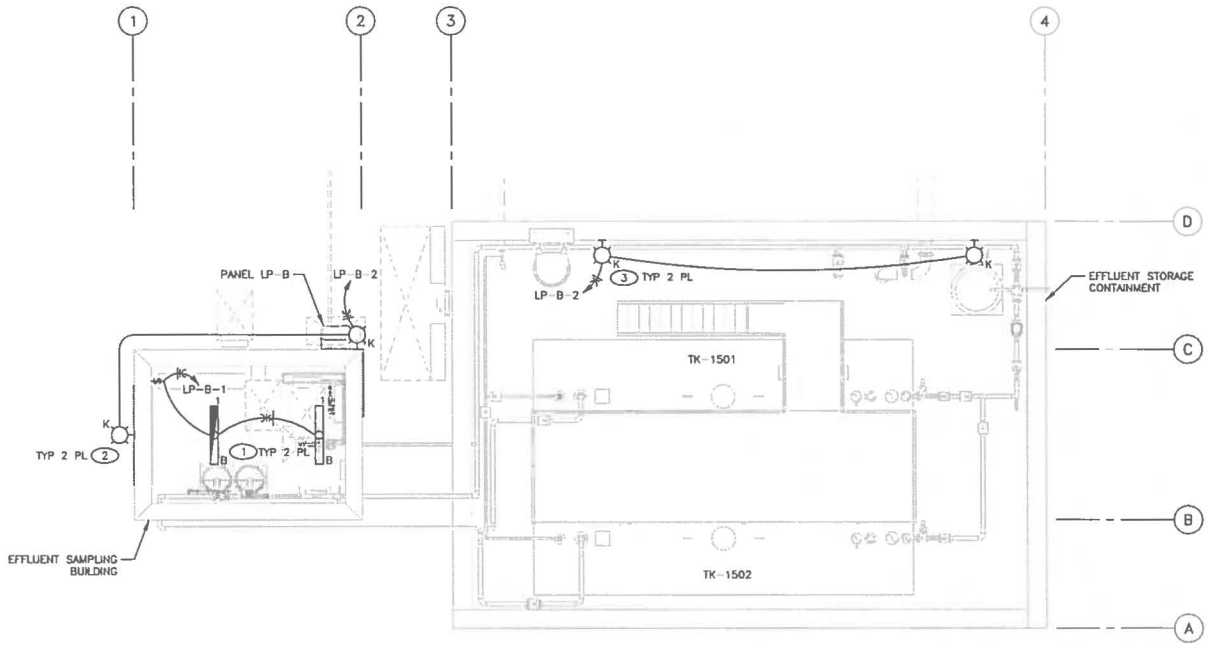

LIGHTING PLAN

1/4"=1'-0"

NO	DATE	CLASS REV	ADC	DESCRIPTION	DWN	DES	CHKD	SUB	APP

AECOM

RLWTF-UP LOW LEVEL WASTE SUBPROJECT

LIGHTING PLAN

BLDG. 261 TA-50

DRAWN	V DAVISON
DESIGN	S MOORE
CHECKED	G MOE
DATE	5/8/14

SUBMITTED: MANNY TARIN

APPROVED FOR RELEASE: ED ARTIGLIA

Los Alamos NATIONAL LABORATORY PO Box 1663 Los Alamos, New Mexico 87545

SHEET E-1402

53 OF 69

CLASSIFICATION | REVIEWER | DATE

PROJECT ID 100761 | DRAWING NO C55867 | REV 0

EUGENE DAVID MOE NEW MEXICO 21369 PROFESSIONAL ENGINEER

File Location: P:\RLWTF LOW-LEVEL WASTE FACILITY\500 CAD\C55867 EFFLUENT STORAGE TANKS\SHEETS\18 ELECTRICAL\55867-E-1402-R0.DWG
Plotted By: DAVISON, VANESSA Plot Date: Friday, May 02, 2014

12562

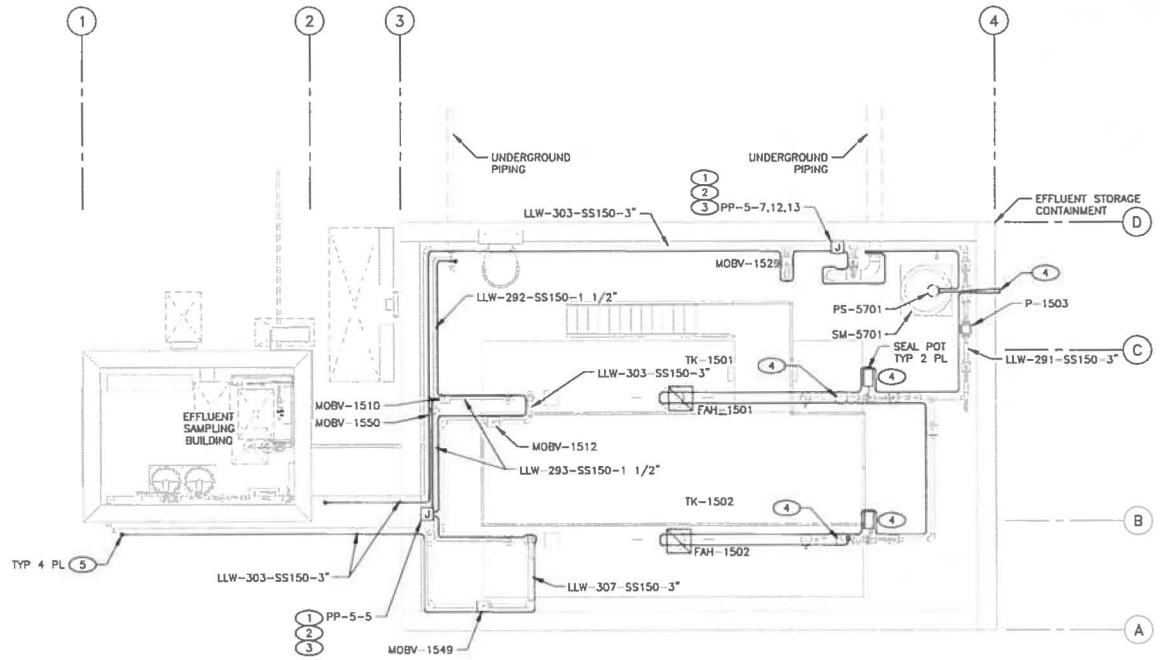

EFFLUENT TANK PIPE HEAT TRACE PLAN

1/4"=1'-0"

GENERAL NOTES

1. IF THIS SHEET IS NOT 24"x 36", THEN IT IS A REDUCED SIZE PLOT. USE GRAPHIC SCALE ACCORDINGLY.
2. SEE DETAIL 1 AND DETAIL 2 ON SHEET E-5401 FOR INSTALLATION OF POWER CONNECTION KITS AND HEAT TRACE ON EFFLUENT PIPING.

KEYED NOTES

1. INSTALL HEAT TRACE POWER CONNECTION KIT AT THE APPROXIMATE MIDPOINT OF THE PIPING RUN. INSTALL TERMINATORS AT EACH END WHERE IT ENTERS BLDG. SEE DETAIL 1 ON E-5401.
2. CONNECT POWER CONNECTION KIT TO HEAT TRACE ENCLOSURE USING #12 AWG CONDUCTORS IN 3/4" CONDUIT.
3. MOUNT HEAT TRACE ENCLOSURE TO EFFLUENT PIPE SUPPORT STRUCTURE AT 60" ABOVE GRADE.
4. FREEZE PROTECTION SHALL BE PROVIDED FOR OVERFLOW ASSEMBLY AND SUMP DISCHARGE PIPE.
5. INSTALL TERMINATOR AT EACH END OF HEAT TRACE CIRCUIT. SEE DETAIL 1, ITEM 6 ON SHEET E-5401.

NO	DATE	CLASS REV	ADC	DESCRIPTION	DWN	DES	CHKD	SUB	APP

AECOM

RLWTF-UP LOW LEVEL WASTE SUBPROJECT

EFFLUENT TANK HEAT TRACE PLAN

BLDG. 261 TA-50

DRAWN	V DAVISON
DESIGN	S MOORE
CHECKED	G MOE
DATE	5/8/14

SUBMITTED MANNY TARIN

APPROVED FOR RELEASE ED ARTIGLIA

Los Alamos NATIONAL LABORATORY PO Box 1663 Los Alamos, New Mexico 87545

SHEET E-1403

54 OF 69

CLASSIFICATION | REVIEWER | DATE

PROJECT ID 100761 | DRAWING NO C55867 | REV 0

EUGENE DAVID MOE NEW MEXICO 21369 PROFESSIONAL ENGINEER

File Location: P:\RLWTF LOW-LEVEL WASTE FACILITY\500 CAD\C55867 EFFLUENT STORAGE TANKS\SHEETS\18 ELECTRICAL\55867-E-1403-RO.DWG
Plotted By: DAVISON, VANESSA; Plot Date: Friday, May 02, 2014

: 12563

GENERAL NOTES

1. IF THIS SHEET IS NOT 24"X36", THEN IT IS A REDUCED SIZE PLOT. USE THE GRAPHIC SCALE ACCORDINGLY.
2. SEE SHEET E-0401 FOR SYMBOLS AND ABBREVIATIONS.

KEYED NOTES

1. TO TREATMENT BUILDING TA-50 BLDG 230. SEE DRAWING C55864 SHEET E-1131.

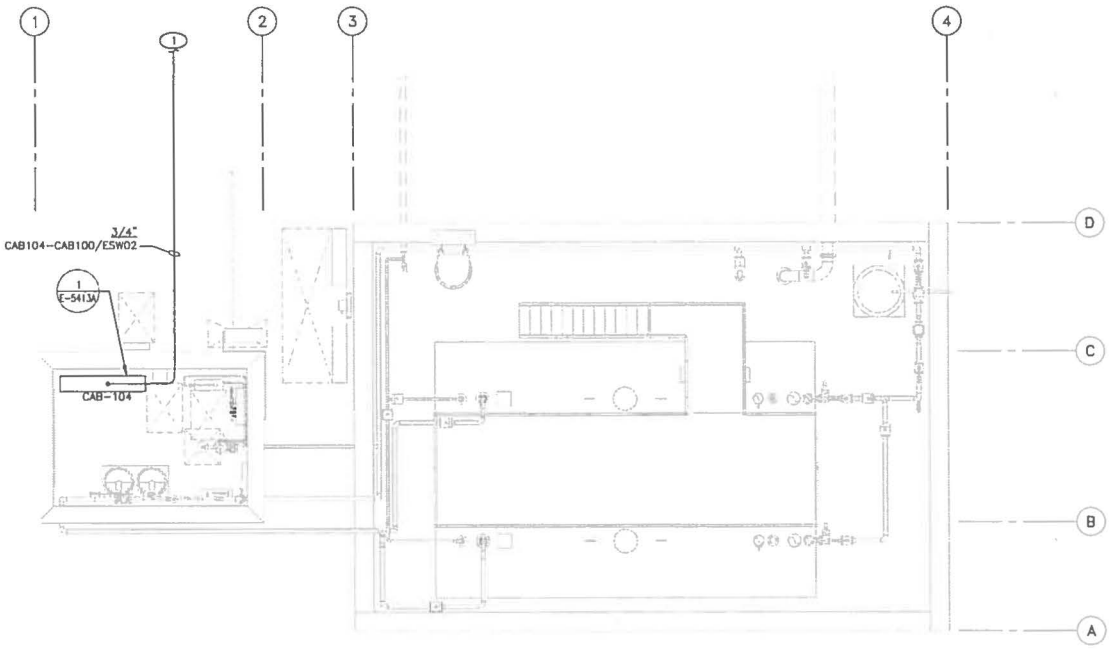

I&C CONDUIT PLAN

0' 1' 2' 4' 6' 8'
1/4"=1'-0"

NO	DATE	CLASS REV	ADC	DESCRIPTION	DWN	DES	CHKD	SUB	APP

AECOM

RLWTF-UP LOW LEVEL WASTE SUBPROJECT

I&C CONDUIT PLAN

BLDG. 261 TA-50

DRAWN	V DAVISON
DESIGN	S MOORE
CHECKED	G MOE
DATE	5/8/14

SUBMITTED: MANNY TARIN

APPROVED FOR RELEASE: ED ARTIGLIA

Los Alamos NATIONAL LABORATORY PO Box 1663 Los Alamos, New Mexico 87545

SHEET E-1404

55 OF 69

CLASSIFICATION | REVIEWER | DATE

PROJECT ID 100761 | DRAWING NO C55867 | REV 0

EUGENE DAVID MOE, NEW MEXICO, 21369, PROFESSIONAL ENGINEER

Engineering Drawing

File Location: P:\RLWTF LOW-LEVEL WASTE FACILITY\500 CAD\C55867 EFFLUENT STORAGE TANKS\SHEETS\18 ELECTRICAL\55867-E-1404-R0.DWG
Plotted By: DAVISON, VANESSA; Plot Date: Friday, May 02, 2014

12664

GENERAL NOTES

1. IF THIS SHEET IS NOT 24"X36", THEN IT IS A REDUCED SIZE PLOT. USE THE GRAPHIC SCALE ACCORDINGLY.
2. SEE SHEET E-0401 FOR SYMBOLS AND ABBREVIATIONS.
3. SEE DRAWING C55864 SHEETS E-7109 AND E-7110 FOR CONDUIT AND WIRE SCHEDULES.

KEYED NOTES

(1) INSTALL RECEPTACLE ON HANDRAIL AT +24" ABOVE GRATING.

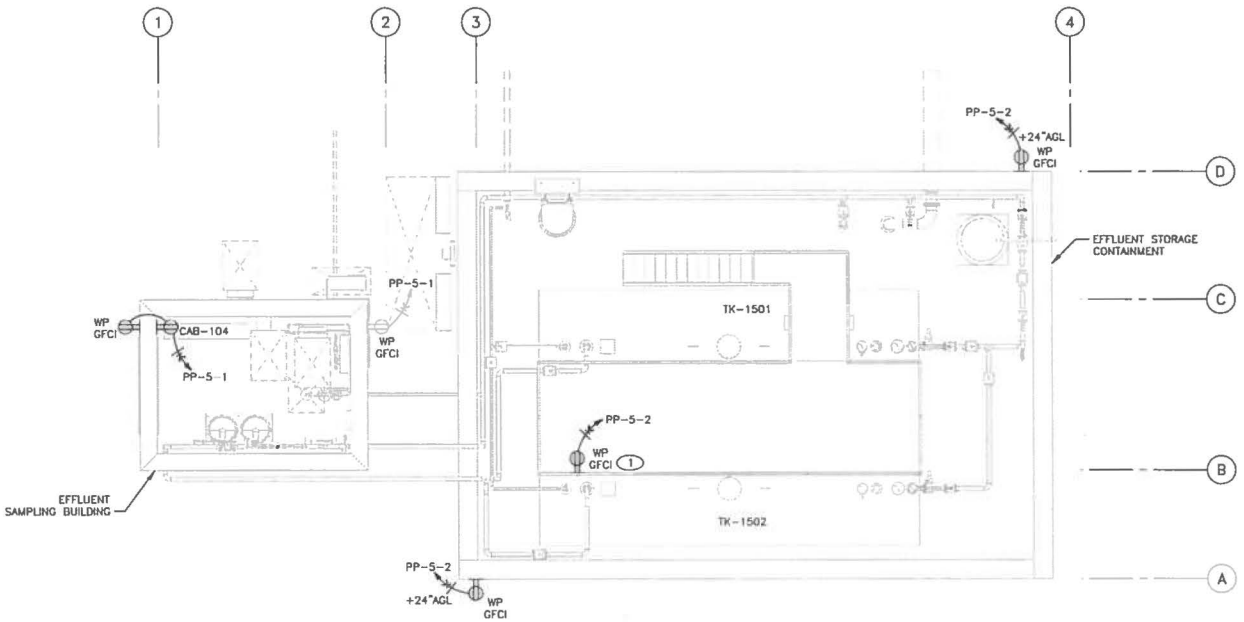

RECEPTACLE PLAN

1/4"=1'-0"

NO	DATE	CLASS REV	ADC	DESCRIPTION	DWN	DES	CHKD	SUB	APP

AECOM

RLWTF-UP LOW LEVEL WASTE SUBPROJECT

RECEPTACLE PLAN

DRAWN	V DAVISON
DESIGN	S MOORE
CHECKED	G MOE
DATE	5/8/14

BLDG. 261 TA-50

SUBMITTED MANNY TARIN

APPROVED FOR RELEASE ED ARTIOLA

Los Alamos NATIONAL LABORATORY PO Box 1663 Los Alamos, New Mexico 87545

SHEET E-1405

56 OF 69

CLASSIFICATION REVIEWER DATE

PROJECT ID 100761

DRAWING NO C55867

REV 0

EUGENE DAVID MOE NEW MEXICO 21369 PROFESSIONAL ENGINEER 5/8/14

55921 :

File Location: P:\RLWTF LOW-LEVEL WASTE FACILITY\300 CAD\C55867 EFFLUENT STORAGE TANKS\SHEETS\18 ELECTRICAL\55867-E-1405-R0.DWG
Plotted By: DAVISON, VANESSA; Plot Date: Friday, May 02, 2014

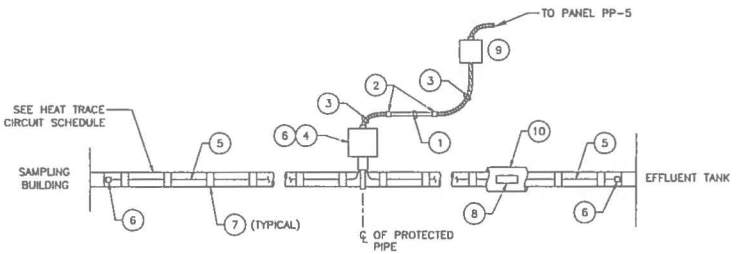

1 E-1403 EFFLUENT PIPING HEAT TRACE DETAIL
SCALE: NONE

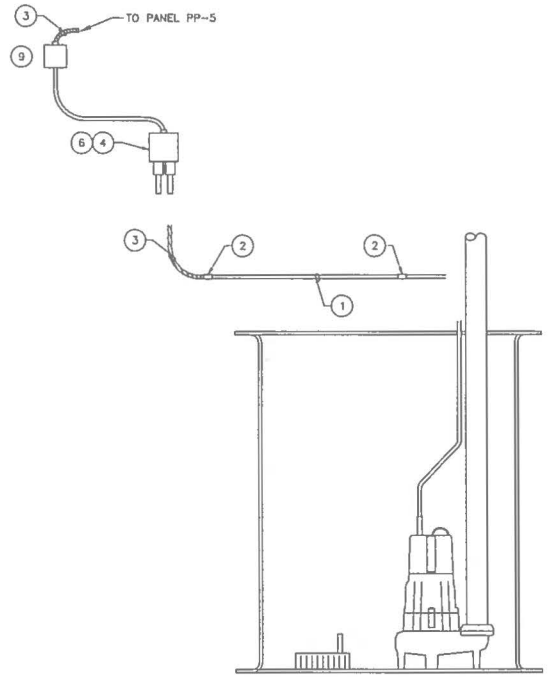

2 E-1403 EFFLUENT CONTAINMENT BASIN SUMP PUMP DETAIL
SCALE: NONE

HEAT TRACE CIRCUIT SCHEDULE

CIRCUIT NUMBER	PIPE NUMBER	PIPE SIZE	NOMENCLATURE/ DESCRIPTION	REFERENCE	PROTECTED LENGTH IN FT.	POWER CIRCUIT	TOTAL AMPS
1	LLW-292-SS150-1 1/2" LLW-293-SS150-1 1/2" LLW-303-SS150-3" LLW-307-SS150-3"	1 1/2", 3"	RIGID PIPE RIGID PIPE	D-1400/E-1403	102	PP-5-5	4.25
2	LLW-291-SS150-3" LLW-303-SS150-3" LLW-D-PVC-2"	3" 2"	RIGID PIPE RIGID PVC PIPE	D-1401/E-1403 P-1401/E-1403	136	PP-5-7	5.65

PARTS/MATERIALS LIST

ITEM #	PARTS/EQUIPMENT NUMBER	NOMENCLATURE/ DESCRIPTION	MATERIAL/ REFERENCE	QUANTITY REQUIRED
1		RGS CONDUIT, 3/4"	--	AR
2		COUPLING, 3/4"	--	4
3		LIQUID-TIGHT FLEX CONDUIT, 3/4"	--	AR
4	PCA-H	POWER CONNECTION KIT	THERMON	2
5	BSX-5-1 BNOJ	CABLE, HEAT TRACE, 5W/FT WITH INSULATING JACKET	THERMON	AR
6	PETK-1D	TERMINATION KIT FOR END OF CIRCUIT FOR SX CABLE	THERMON	6
7	FT-1L/FT-1H	FIXING TAPE - COPPER 2-1/2" WIDE MINIMUM	THERMON	AR
8	CL	"ELECTRIC HEAT TRACING" LABEL	THERMON	AR
9	B4X-15140	THERMOSTAT	THERMON	2
10		INSULATION, 1" THICK	CERABLANKET	AR
11	W-500	UTILITY HEATER	ALLIED PRECISION INDUST	1
12	HBL-1221	SNAP SWITCH	HUBBLE	1
13	HBL-1221	SNAP SWITCH	HUBBLE	1

GENERAL NOTES

1. COVER INSULATION WITH FIBERGLASS FABRIC IMPREGNATED WITH SILICONE RUBBER.
2. HEAT TRACE SHALL BE INSTALLED LINEAR ALONG THE EXTERIOR OF THE PIPE AND SHALL BE OVERLAYED BY CONDUCTIVE COPPER TAPE (ITEM 7).
3. WHEN HEAT TRACED PIPE ENTERS BUILDING, EXTEND CABLE MINIMUM 12".
4. ALL HEATING CABLE POWER CONNECTION POINTS SHALL BE SECURED TO THE TRACED PIPING. INSTALL PER MANUFACTURER'S INSTRUCTIONS.
5. FIELD ROUTE CONDUIT TO HEAT TRACE ENCLOSURE. SEE E-1400 FOR LOCATION.
6. FIELD ROUT CONDUIT TO SUMP PUMP SWITCH ENCLOSURE SEE E-1400 FOR LOCATION.

NO	DATE	CLASS REV	ADC	DESCRIPTION	DWN	DES	CHKD	SUB	APP

AECOM

RLWTF-UP LOW LEVEL WASTE SUBPROJECT

HEAT TRACE DETAILS

BLDG. 261 TA-50

DRAWN	V DAVISON
DESIGN	S MOORE
CHECKED	G MOE
DATE	5/8/14

SUBMITTED MANNY TARIN

APPROVED FOR RELEASE ED ARTIGLIA

Los Alamos NATIONAL LABORATORY PO Box 1663 Los Alamos, New Mexico 87545

SHEET E-5401

57 OF 69

CLASSIFICATION REVIEWER DATE

PROJECT ID 100761 DRAWING NO C55867 REV 0

EUGENE DAVID MOE NEW MEXICO 21389 PROFESSIONAL ENGINEER

File Location: P:\RLWTF LOW-LEVEL WASTE FACILITY\500 CAD\C55867 EFFLUENT STORAGE TANKS\SHEETS\16 ELECTRICAL\55867-E-5401-R0.DWG
Plotted By: DAVISON, VANESSA; Plot Date: Friday, May 02, 2014

12666

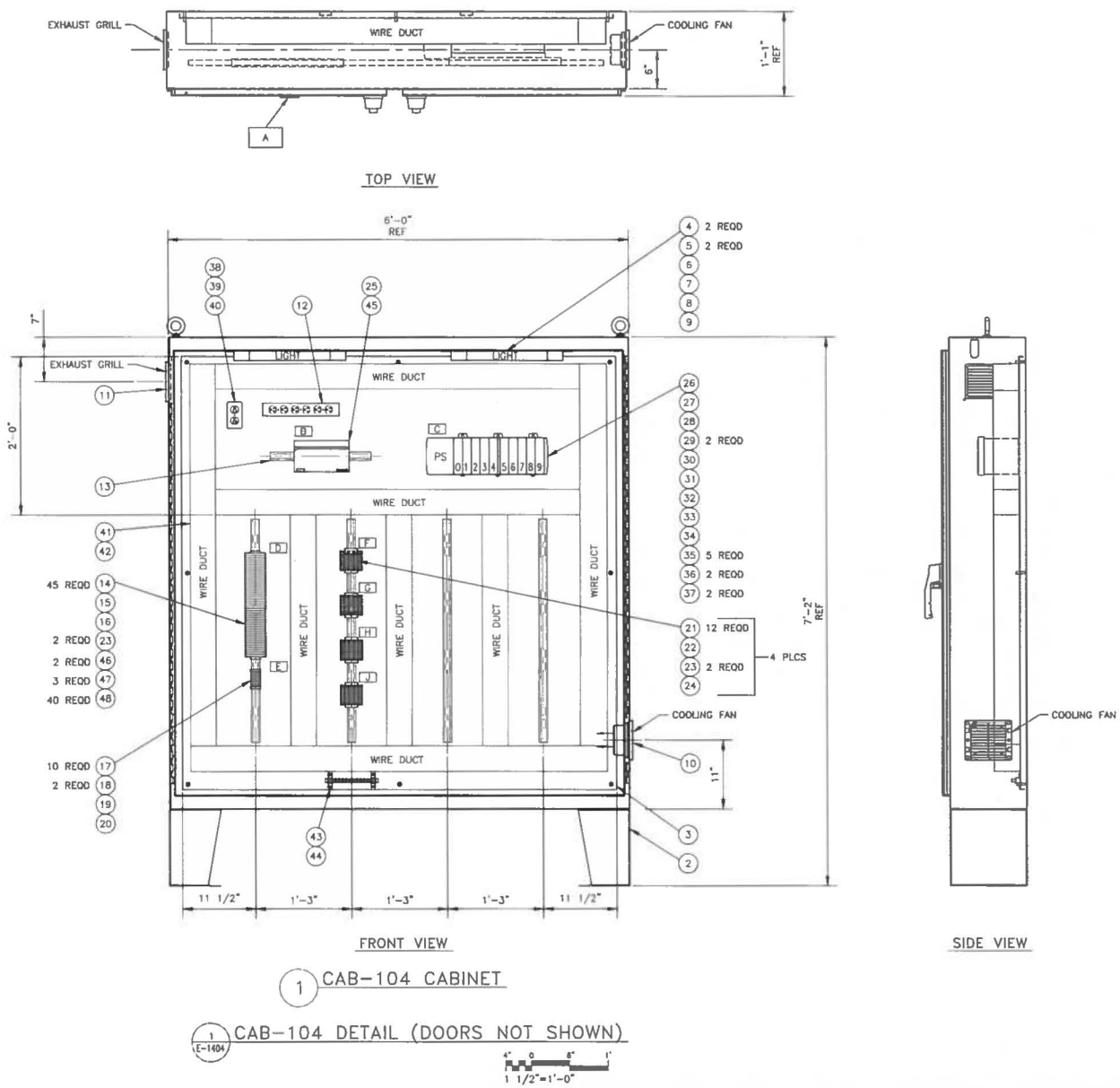

1 CAB-104 CABINET

1 E-1404 CAB-104 DETAIL (DOORS NOT SHOWN)

1 1/2"=1'-0"

GENERAL NOTES:

1. EQUIPMENT SHALL BE INSTALLED PER MANUFACTURER'S INSTRUCTIONS USING THE APPROPRIATE HARDWARE.
2. ALL WIRES AND CABLE SHALL BE LABELED AT BOTH TERMINATIONS.
3. ENCLOSURE AND ENCLOSURE DOORS SHALL BE ATTACHED TO GROUND.
4. SEE SHEET E-5413B FOR PARTS LIST/MATERIAL LIST AND NAMEPLATE ENGRAVING SCHEDULE.
5. SEE SHEETS E-6453 FOR I/O SLOT ASSIGNMENTS.
6. SEE SHEET E-6469A THROUGH E-6469D FOR PANEL TERMINATION.
7. SEE SHEET E-6410 FOR INSTRUMENT ELECTRICAL DISTRIBUTION.
8. IF THIS SHEET IS NOT 24"X36", THEN IT IS A REDUCED SIZE PLOT. USE THE GRAPHIC SCALE ACCORDINGLY.
9. SEE SHEET E-5413B FOR PARTS LIST.

NO	DATE	CLASS REV	ADC	DESCRIPTION	DWN	DES	CHKD	SUB	APP

AECOM

RLWTF-UP LOW LEVEL WASTE SUBPROJECT

CAB-104 PANEL LAYOUT

BLDG. 261 TA-50

DRAWN	V DAVISON
DESIGN	S MOORE
CHECKED	G MOE
DATE	5/6/14

SUBMITTED: MANNY TARIN

APPROVED FOR RELEASE: ED ARTIGLIA

Los Alamos NATIONAL LABORATORY PO Box 1663 Los Alamos, New Mexico 87545

SHEET E-5413A

58 OF 69

CLASSIFICATION | REVIEWER | DATE

PROJECT ID 100761 | DRAWING NO C55867 | REV 0

EUGENE DAVID MOE NEW MEXICO 21389 PROFESSIONAL ENGINEER

File Location: P:\RLWTF LOW-LEVEL WASTE FACILITY\500 CAD\C55867 EFFLUENT STORAGE TANKS\SHEETS\16 ELECTRICAL\55867-E-5413A-R0.DWG
Plotted By: DAVISON, VANESSA; Plot Date: Friday, May 02, 2014

12567

PARTS LIST/MATERIAL LIST

QTY REQD	PARTS / DASH NUMBER	NOMENCLATURE/DESCRIPTION	MATERIAL/REFERENCE	SHEET	ITEM NO.
X	-010	CAB-104 CABINET			1
1	A74H7212LP3PT OR APPROVED EQUAL	ENCLOSURE FREE STANDING 74"x72"x12" NEMA TYPE 4, TWO DOOR, FLOOR STANDS	HOFFMAN		2
1	A72P72 OR APPROVED EQUAL	BACK PANEL 68" X 68"	HOFFMAN		3
2	LF120V18	18" FLUORESCENT LIGHT ENCLOSURE	HOFFMAN		4
2	F8T5	18" FLUORESCENT BULB	HOFFMAN		5
1	LF120VCORD	FLUORESCENT LIGHT POWER CORD	HOFFMAN		6
1	ALFSWD	DOOR ACTIVATED SWITCH	HOFFMAN		7
1	LGCABLE24	GANGING CABLE, 24"	HOFFMAN		8
1	LDSWITCH18	DOOR SWITCH CABLE, 18"	HOFFMAN		9
1	TFP41	COOLING FAN PACKAGE, 4" FAN, AND TYPE 1 FILTER	HOFFMAN		10
1	TEP4	EXHAUST GRILL & FILTER, TYPE 1	HOFFMAN		11
1	DP1N120615	POWER OUTLET STRIP	HOFFMAN		12
AR	199-DR1 OR APPROVED EQUAL	RAIL, MOUNTING, STEEL	ALLEN-BRADLEY		13
45	1492-H6	FUSE BLOCK, 300V, 12A MAX	ALLEN-BRADLEY		14
1	1492-N37	END BARRIER	ALLEN-BRADLEY		15
AR	1492-N49	SIDE JUMPER, FANNING STRIP, 10 POLE	ALLEN-BRADLEY		16
10	1492-HM1BL	TERMINAL BLOCK, 600V, 30A MAX	ALLEN-BRADLEY		17
2	1492-EAH35	END ANCHOR	ALLEN-BRADLEY		18
1	1492-NM36	END BARRIER	ALLEN-BRADLEY		19
AR	1492-N39	SIDE JUMPER, FANNING STRIP, 50 POLE	ALLEN-BRADLEY		20
48	1492-JT3M OR APPROVED EQUAL	TERMINAL, 300V, 3 LEVEL/3 CIRCUIT, WITH GROUND POINT	ALLEN-BRADLEY		21
4	1492-EBJ3TM OR APPROVED EQUAL	END BARRIER	ALLEN-BRADLEY		22
10	1492-EAHJ35 OR APPROVED EQUAL	END ANCHOR	ALLEN-BRADLEY		23
AR	1492-SJ6A-50	INSULATED SIDE JUMPER, 50 POLE	ALLEN-BRADLEY		24
1	1606XL480E	POWER SUPPLY, 480W, 24-28V	ALLEN-BRADLEY		25
1	1756-A10	10 SLOT CONTROLOGIX CHASSIS	ALLEN-BRADLEY		26
1	1756-PA75	85-255V AC POWER SUPPLY (5VØ13A)	ALLEN-BRADLEY		27
1	1756-ENBT	ETHERNET BRIDGE MODULE	ALLEN-BRADLEY		28
2	1756-IB16I	10-30VDC ISOLATED INPUT 16 PTS (36 PIN)	ALLEN-BRADLEY		29
1	1756-OB16I	10-30VDC ISOLATED OUTPUT 16 PTS (36 PIN)	ALLEN-BRADLEY		30
1	1756-OW16I	N.O. ISOLATED RELAY OUTPUT 16 PTS (36 PIN)	ALLEN-BRADLEY		31
1	1756-IF16	ANALOG INPUT CURRENT/VOLTAGE 16PTS (36 PIN)	ALLEN-BRADLEY		32
1	1756-OF8	ANALOG OUTPUT CURRENT/VOLTAGE 8PTS (20 PIN)	ALLEN-BRADLEY		33
1	1756-IR6I	ISOLATED RTD INPUT 6 PTS (20 PIN)	ALLEN-BRADLEY		34
5	1756-TBCH	36 PIN SCREW CLAMP BLOCK WITH STANDARD HOUSING	ALLEN-BRADLEY		35
2	1756-TBNH	20 PIN NEMA SCREW CLAMP BLOCK	ALLEN-BRADLEY		36
2	1756-N2	EMPTY SLOT FILLER CARD	ALLEN-BRADLEY		37
1	5262G	DUPLEX RECEPTACLE, NEMA 5-15R, GRAY	HUBBELL		38
1	660	HANDY BOX, 4" X 2" X 1-7/8"	RACO		39
1	864	HANDY BOX COVER, DUPLEX RECEPTACLE	RACO		40
AR	G4X4WH6 OR APPROVED EQUAL	WIRE DUCT, WIDE SLOT, WHITE, 4.25" X 4.1"	PANDUIT		41
AR	C4WH6 OR APPROVED EQUAL	COVER, WHITE	PANDUIT		42
1	UGB2/0-414-12	GROUNDING BAR, 12 PORT	PANDUIT		43
1	UGB-B-SO	BONDING STAND-OFF	PANDUIT		44
1	5625.072.1731	POWER CORD, 5-15P TO ROJ, 18/3, 6FT	AMERICORD		45
2		FUSE, 5.0A	--		46
3		FUSE, 0.5A	--		47
40		FUSE, 1.0A	--		48

NAMEPLATE ENGRAVING SCHEDULE

ITEM	SIZE	CHAR SIZE	ENGRAVING
A	3" W x 1 H"	3/8"	CAB-104
B	3" W x 1 H"	3/8"	PS1
C	3" W x 1 H"	1/4"	NODE 8
D	1" W x 0.5 H"	1/4"	PB1
E	1" W x 0.5 H"	1/4"	RTN1
F	1" W x 0.5 H"	1/4"	TB1
G	1" W x 0.5 H"	1/4"	TB2
H	1" W x 0.5 H"	1/4"	TB3
J	1" W x 0.5 H"	1/4"	TB4

GENERAL NOTES:

1. NAMEPLATE SHALL BE 1/16" THK MATTE FINISH LAMINATED PLASTIC WHITE SURFACE/BLACK CORE. BOND IN PLACE WHERE POSSIBLE.

NO	DATE	CLASS REV	ADC	DESCRIPTION	DWN	DES	CHKD	SUB	APP

AECOM

RLWTF-UP LOW LEVEL WASTE SUBPROJECT

CAB-104 PANEL LAYOUT

DRAWN V. DAVISON

DESIGN S. MOORE

CHECKED D. MOE

DATE 5/8/14

BLDG. 261 TA-50

SUBMITTED MANNY TARIN

APPROVED FOR RELEASE ED ARTIGLIA

Los Alamos NATIONAL LABORATORY PO Box 1663 Los Alamos, New Mexico 87545

SHEET E-5413B

59 OF 69

CLASSIFICATION REVIEWER DATE

PROJECT ID 100761

DRAWING NO C55867

REV 0

EUGENE DAVID MOE NEW MEXICO 21369 REGISTERED PROFESSIONAL ENGINEER 05/07/2014

12568

File Location: P:\RLWTF LOW-LEVEL WASTE FACILITY\500 CAD\C55867 EFFLUENT STORAGE TANKS\SHEETS\18 ELECTRICAL\55867-E-5413B-R0.DWG
Plotted By: DAVISON, VANESSA, Plot Date: Friday, May 02, 2014

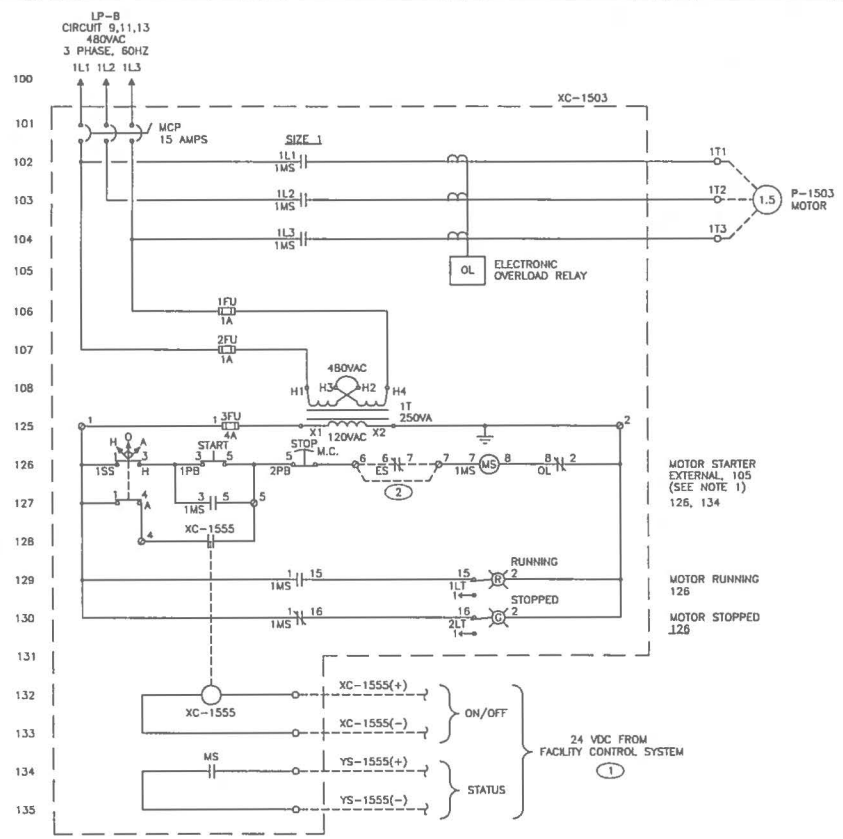

SEQUENCE OF OPERATION

1. WITH H-O-A SELECTOR SWITCH "1SS" IN ANY POSITION AND MOTOR NOT RUNNING, GREEN "STOPPED" PILOT LIGHT "2LT" IS ON, RED "RUNNING" PILOT LIGHT "1LT" IS OFF.
2. WITH H-O-A SELECTOR SWITCH "1SS" IN "HAND" POSITION, PRESS "START" PUSHBUTTON "1PB", MOTOR STARTS, RED "RUNNING" PILOT LIGHT "1LT" IS ON AND GREEN "STOPPED" PILOT LIGHT "2LT" IS OFF.
3. WITH H-O-A SELECTOR SWITCH "1SS" IN "AUTO" POSITION, CLOSING OF MAINTAINED CONTACT FROM FCS ENERGIZES INTERFACE RELAY AND STARTS MOTOR, RED "RUNNING" PILOT LIGHT "1LT" IS ON, GREEN "STOPPED" PILOT LIGHT "2LT" IS OFF.
4. WITH H-O-A SELECTOR SWITCH "1SS" IN ANY POSITION, OPENING OF MAINTAINED REMOTE "EMERGENCY STOP" CONTACTS "ES" STOPS MOTOR, GREEN "STOPPED" PILOT LIGHT "2LT" IS ON, RED "RUNNING" PILOT LIGHT "1LT" IS OFF.
5. WITH H-O-A SELECTOR SWITCH "1SS" IN "HAND" OR "AUTO" POSITION, PRESS MAINTAINED ACTION, ROTARY RELEASE "STOP" PUSHBUTTON, MOTOR STOPS, GREEN "STOPPED" PILOT LIGHT "2LT" IS ON, RED "RUNNING" PILOT LIGHT "1LT" IS OFF.

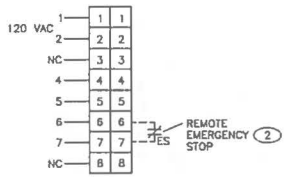

MOTOR CONTROL DIAGRAM – EFFLUENT PUMP (P-1503)

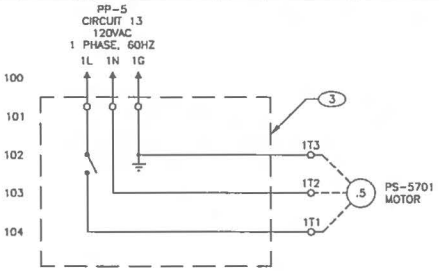

LOCAL CONTROL DIAGRAM – SUMP PUMP (PS-5701)

SCALE: NONE

GENERAL NOTES

1. NUMBERS ON THE RIGHT SIDE OF LADDER DIAGRAMS INDICATE DIAGRAM LINE NUMBERS FOR CONTROL DEVICE CONTACTS. UNDERLINED NUMBER INDICATES A NORMALLY CLOSED CONTACT.

KEYED NOTES

(1) PROVIDE AND INSTALL 1/2" CONDUIT FROM MOTOR COMBINATION STARTER (MS-1503) TO FACILITY CONTROL SYSTEM CAB-104. INSTALL FOUR #14 AWG THHN CONDUCTORS FOR MOTOR STATUS AND CONTROL. SEE LOOP SHEET M-6390.

(2) JUMPER INSTALLED BETWEEN TERMINALS 6 & 7. REMOTE EMERGENCY STOP SWITCH OPTION IS NOT USED IN THE FIELD.

(3) PROVIDE 4" X 4" X 2 1/2 J-BOX, SNAP SWITCH, AND WATERPROOF COVER. SEE SHEET E-5401.

NO	DATE	CLASS REV	ADC	DESCRIPTION	DWN	DES	CHKD	SUB	APP

AECOM

RLWTF-UP LOW LEVEL WASTE SUBPROJECT

MOTOR CONTROL DIAGRAMS

DRAWN	V DAWSON
DESIGN	S MOORE
CHECKED	G MOE
DATE	5/8/14

BLDG. 261 TA-50

SUBMITTED: MANNY TARIN — APPROVED FOR RELEASE: ED ARTIGLIA

Los Alamos NATIONAL LABORATORY — PO Box 1663, Los Alamos, New Mexico 87545

SHEET E-6402

60 OF 69

CLASSIFICATION | REVIEWER | DATE

PROJECT ID 100761 | DRAWING NO C55867 | REV 0

EUGENE DAVID MOE, NEW MEXICO, 21369, PROFESSIONAL ENGINEER, 2014

File Location: P:\RLWTF LOW-LEVEL WASTE FACILITY\300 CAD\C55867 EFFLUENT STORAGE TANKS\SHEETS\10 ELECTRICAL\55867- E-6402-R0.DWG
Plotted By: DAWSON, VANESSA Plot Date: Friday, May 02, 2014

12669

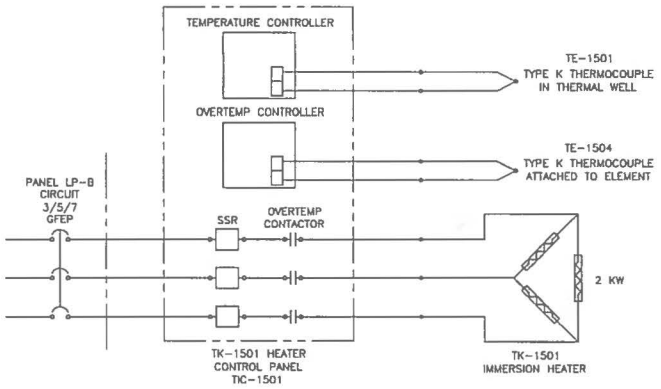

TK-1501 IMMERSION HEATER WIRING DIAGRAM

SCALE: NONE

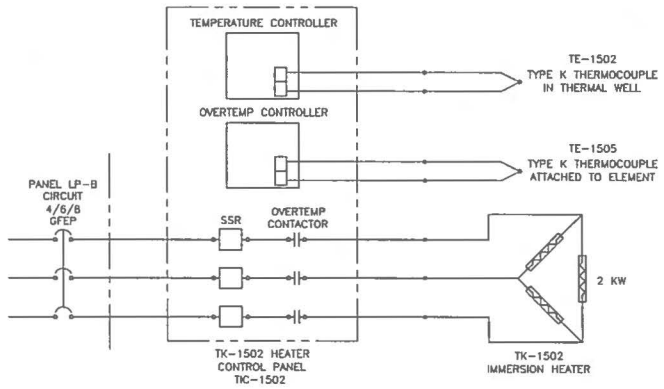

TK-1502 IMMERSION HEATER WIRING DIAGRAM

SCALE: NONE

GENERAL NOTES

1. MAINTAIN MINIMUM OF 2" LIQUID ABOVE HEATERS.
2. KEEP HEATER ELEMENTS ABOVE SEDIMENT DEPOSITS.
3. SET CONTROLLER TO OPERATE WHEN TEMPERATURE OF LIQUID IN TANKS DROPS BELOW 45° F.

NO	DATE	CLASS REV	ADC	DESCRIPTION	DWN	DES	CHKD	SUB	APP

AECOM

RLWTF-UP LOW LEVEL WASTE SUBPROJECT

IMMERSION HEATER WIRING DIAGRAM

BLDG. 261 TA-50

DRAWN	V DAVISON
DESIGN	S MOORE
CHECKED	G MOE
DATE	5/8/14

SUBMITTED: MANNY TARIN — APPROVED FOR RELEASE: ED ARTIGLIA

Los Alamos NATIONAL LABORATORY — PO Box 1663 Los Alamos, New Mexico 87545

SHEET E-6403

61 OF 69

CLASSIFICATION | REVIEWER | DATE

PROJECT ID 100761 | DRAWING NO. C55867 | REV 0

File Location: P:\RLWTF LOW-LEVEL WASTE FACILITY\500 CAD\C55867 STYLUS\T STORAGE TANKS\SHEETS\18 ELECTRICAL\55867-E-6403-R0.DWG
Plotted By: DAVISON, VANESSA Plot Date: Friday, May 02, 2014

File Location: P:\RLWTF LOW-LEVEL WASTE FACILITY\500 CAD\C55867 EFFLUENT STORAGE TANKS\SHEETS\16 ELECTRICAL\55867-E-6410-R0.DWG
Plotted By: DAWSON, VANESSA; Plot Date: Friday, May 02, 2014

CAB-104
TERMINATION CABINET

PS-1

BK L1
WH NEU
GN GND
RD (+)
RD (+)
BK (-)
(-)

NODE 8
POWER SUPPLY

BK L1
WH NEU
GN GND

RECPT

FAN

LIGHT — LIGHT

PB-1

16AWG	PB1/001	5.0A	RD	
16AWG	PB1/002	5.0A	RD	
	PB1/003	0.5A	RD	PB1/003-TB1/001 — SHT E-6169A
	PB1/004	0.5A	RD	PB1/004-TB2/037 — SHT E-6169A
	PB1/005	0.5A	RD	PB1/005-TB4/121 — SHT E-6169A
	PB1/006	1.0A	RD	PB1/006-RTB8_3/02 — DO_8_3 (CH 0)
	PB1/007	1.0A	RD	PB1/007-RTB8_3/04 — DO_8_3 (CH 1)
	PB1/008	1.0A	RD	PB1/008-RTB8_3/06 — DO_8_3 (CH 2)
	PB1/009	1.0A	RD	PB1/009-RTB8_3/08 — DO_8_3 (CH 3)
	PB1/010	1.0A	RD	PB1/010-RTB8_3/10 — DO_8_3 (CH 4)
	PB1/011	1.0A	RD	PB1/011-RTB8_3/12 — DO_8_3 (CH 5)
	PB1/012	1.0A	RD	PB1/012-RTB8_3/14 — DO_8_3 (CH 6)
	PB1/013	1.0A	RD	PB1/013-RTB8_3/16 — DO_8_3 (CH 7)
	PB1/014	1.0A	RD	PB1/014-RTB8_3/18 — DO_8_3 (CH 8)
	PB1/015	1.0A	RD	PB1/015-RTB8_3/20 — DO_8_3 (CH 9)
	PB1/016	1.0A	RD	PB1/016-RTB8_3/22 — DO_8_3 (CH 10)
	PB1/017	1.0A	RD	PB1/017-RTB8_3/24 — DO_8_3 (CH 11)
	PB1/018	1.0A	RD	PB1/018-RTB8_3/26 — DO_8_3 (CH 12)
	PB1/019	1.0A	RD	PB1/019-RTB8_3/28 — DO_8_3 (CH 13)
	PB1/020	1.0A	RD	PB1/020-RTB8_3/30 — DO_8_3 (CH 14)
	PB1/021	1.0A	RD	PB1/021-RTB8_3/32 — DO_8_3 (CH 15) — SHT E-6469B
	PB1/022	1.0A	RD	PB1/022-RTB8_6/02 — RO_8_6 (CH 0)
	PB1/023	1.0A	RD	PB1/023-RTB8_6/04 — RO_8_6 (CH 1)
	PB1/024	1.0A	RD	PB1/024-RTB8_6/06 — RO_8_6 (CH 2)
	PB1/025	1.0A	RD	PB1/025-RTB8_6/08 — RO_8_6 (CH 3)
	PB1/026	1.0A	RD	PB1/026-RTB8_6/10 — RO_8_6 (CH 4)
	PB1/027	1.0A	RD	PB1/027-RTB8_6/12 — RO_8_6 (CH 5)
	PB1/028	1.0A	RD	PB1/028-RTB8_6/14 — RO_8_6 (CH 6)
	PB1/029	1.0A	RD	PB1/029-RTB8_6/16 — RO_8_6 (CH 7)
	PB1/030	1.0A	RD	PB1/030-RTB8_6/18 — RO_8_6 (CH 8)
	PB1/031	1.0A	RD	PB1/031-RTB8_6/20 — RO_8_6 (CH 9)
	PB1/032	1.0A	RD	PB1/032-RTB8_6/22 — RO_8_6 (CH 10)
	PB1/033	1.0A	RD	PB1/033-RTB8_6/24 — RO_8_6 (CH 11)
	PB1/034	1.0A	RD	PB1/034-RTB8_6/26 — RO_8_6 (CH 12)
	PB1/035	1.0A	RD	PB1/035-RTB8_6/28 — RO_8_6 (CH 13)
	PB1/036	1.0A	RD	PB1/036-RTB8_6/30 — RO_8_6 (CH 14)
	PB1/037	1.0A	RD	PB1/037-RTB8_6/32 — RO_8_6 (CH 15) — SHT E-6469C
	PB1/038	1.0A	RD	LSH5706-PB1/038 — SHT M-6381
	PB1/039	1.0A	RD	SC4012-PB1/039 — SHT M-6400
	PB1/040	1.0A	RD	SC4013-PB1/040 — SHT M-6402
	PB1/041	5.0A	RD	
	PB1/042	0.5A	RD	FY1515-PB1/042 — SHT M-6398
	PB1/043	0.5A	RD	MOBV1510-PB1/043 — SHT M-6376
	PB1/044	0.5A	RD	MOBV1513-PB1/044 — SHT M-6378
	PB1/045	0.5A	RD	MOBV1512-PB1/045 — SHT M-6379
	PB1/046	0.5A	RD	MOBV1531-PB1/046 — SHT M-6386
	PB1/047	0.5A	RD	MOBV1550-PB1/047 — SHT M-6388
	PB1/048	0.5A	RD	MOBV1549-PB1/048 — SHT M-6392
	PB1/049	0.5A	RD	MOBV1529-PB1/049 — SHT M-6393
	PB1/050	0.5A	SPARE	

RTN-1

RTN1/001	BK	RTN1/001-TB3/074	SHT E-6469A
RTN1/002	BK	RTN1/002-RTB8_4/01	SHT E-6469C
RTN1/003	BK	RTN1/003-RTB8_1/02	SHT E-6469B
RTN1/004	BK	RTN1/004-RTB8_2/02	SHT E-6469B
RTN1/005	BK	LSH5706-RTN1/005	SHT M-6381
RTN1/006	BK	SC4012-RTN1/006	SHT M-6400
RTN1/007	BK	SC4013-RTN1/007	SHT M-6402
RTN1/008	BK	FY1515-RTN1/008	SHT M-6398
RTN1/009	BK	MOBV1510-RTN1/009	SHT M-6376
RTN1/010	BK	MOBV1513-RTN1/010	SHT M-6378
RTN1/011	BK	MOBV1512-RTN1/011	SHT M-6379
RTN1/012	BK	MOBV1531-RTN1/012	SHT M-6386
RTN1/013	BK	MOBV1550-RTN1/013	SHT M-6388
RTN1/014	BK	MOBV1549-RTN1/014	SHT M-6392
RTN1/015	BK	MOBV1529-RTN1/015	SHT M-6393

GENERAL NOTES

1. RECEPTACLE POWERED FROM PP-S-4, SEE SHEET E-1400.

AECOM

RLWTF-UP LOW LEVEL WASTE SUBPROJECT

CAB-104 INSTRUMENT ELECTRICAL DISTRIBUTION

TA-50

BLDG. 261

NO	DATE	CLASS REV	ADC	DESCRIPTION	DRWN	DES	CHKD	ESD	APP
					V DAWSON	S MOORE	G LAKE		

DESIGNED	S MOORE	DRAWN	V DAWSON
CHECKED	G LAKE	DATE	5/9/14
APPROVED FOR RELEASE			
ED ARTEGA			
SIGNATURE			
MARK TABB			

Los Alamos NATIONAL LABORATORY — PO Box 1663, Los Alamos, New Mexico 87545

CLASSIFICATION	REVIEWER	SHEET
		E-6410

PROJECT ID	DRAWING NO	REV
100761	C55867	0

DATE		SHEET OF
		62 OF 69

CAB-104: NETWORK 1, NODE 8

SLOT 0	SLOT 1	SLOT 2	SLOT 3	SLOT 4	SLOT 5	SLOT 6
1756-ENBT ETHERNET BRIDGE	DI_8_1 1756-IB16I 16 PT 10V-30V DC ISOLATED INPUT, SINK/SOURCE	DI_8_2 1756-IB16I 16 PT 10V-30V DC ISOLATED INPUT, SINK/SOURCE	DO_8_3 1756-OB16I 16 PT 10V-30V DC ISOLATED OUTPUT, SINK/SOURCE	AI_8_4 1756-IF16 16 CHANNEL NON-ISOLATED VOLTAGE/CURRENT ANALOG IN	AO_8_5 1756-OF8 8 CHANNEL NON-ISOLATED VOLTAGE/CURRENT ANALOG OUT	RO_8_6 1756-OW16I 16 PT 10V-265V AC 5-150 V DC ISOLATED RELAY
	0 ZSO-1510	0 ZSO-1529	0 MOBV-1510	0 AIT-1509	0	0
	1 ZSC-1510	1 ZSC-1529	1 MOBV-1512	1 LIT-1511	1	1
	2 ZSO-1512	2 LSH-5707	2 MOBV-1513	2 AIT-1529	2 FY-1515	2
	3 ZSC-1512	3 LSH-5708	3 MOBV-1531	3 LIT-1537	3	3
	4 ZSO-1513	4	4 MOBV-1549	4 PIT-1517	4	4
	5 ZSC-1513	5	5 MOBV-1550	5 FIT-1516	5	5
	6 ZSO-1531	6	6 XC-1555	6 CIT-1527	6	6
	7 ZSC-1531	7	7 MOBV-1529	7	7	7
	8 ZSO-1549	8	8 HS-4012	8		8
	9 ZSC-1549	9	9 HS-4013	9 FIT-1515		9
	10 ZSO-1550	10	10	10		10
	11 ZSC-1550	11	11	11		11
	12 YI-1555	12	12	12		12
	13 LSH-5706	13	13	13		13
	14 FSL-4012	14	14	14		14
	15 FSL-4013	15	15	15		15

SLOT 7	SLOT 8	SLOT 9
RTD_8_7 1756-IR6I 6 CHANNEL ISOLATED RTD ANALOG INPUT	EMPTY	EMPTY
0 TE-5371		
1		
2		
3		
4		
5		

NO	DATE	CLASS REV	ADC	DESCRIPTION	DWN	DES	CHKD	SUB	APP

AECOM

RLWTF-UP LOW LEVEL WASTE SUBPROJECT

CAB-104 NODE 8 I/O MODULE DISTRIBUTION

BLDG. 261 TA-50

DRAWN	V DAVISON
DESIGN	S MOORE
CHECKED	G MOE
DATE	5/6/14

SUBMITTED MANNY TARIN

APPROVED FOR RELEASE ED ARTIGLIA

Los Alamos NATIONAL LABORATORY PO Box 1663 Los Alamos, New Mexico 87545

SHEET E-6453

63 OF 69

CLASSIFICATION | REVIEWER | DATE

PROJECT ID 100761 | DRAWING NO C55867 | REV 0

EUGENE DAVID MOE NEW MEXICO 21389 PROFESSIONAL ENGINEER

File Location: P:\RLWTF LOW-LEVEL WASTE FACILITY\500 CAD\C55867 EFFLUENT STORAGE TANKS\SHEETS\18 ELECTRICAL\55867-E-6453-RO.DWG
Plotted By: DAVISON, VANESSA; Plot Date: Friday, May 02, 2014

: 12672

127673

File Location: P:\RLWTF LOW-LEVEL WASTE FACILITY\500 CAD\C55867 EFFLUENT STORAGE TANKS\SHEETS\15 ELECTRICAL\55867-E-6469A-R0.DWG
Plotted By: DAWSON, VANESSA; Plot Date: Friday, May 02, 2014

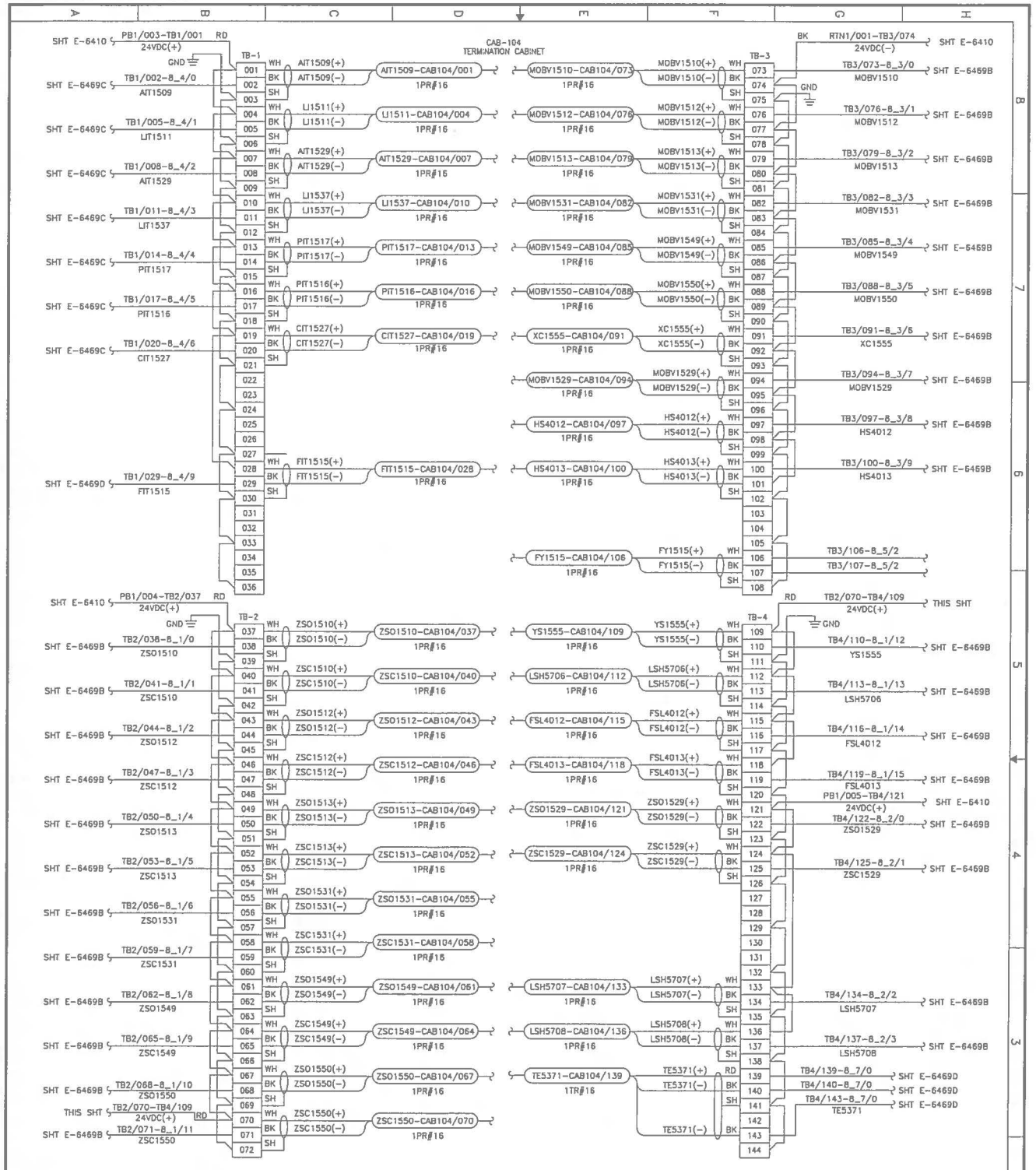

GENERAL NOTES

1. SEE DRAWING C55867 SHEET E-5413 FOR PANEL LAYOUT DETAILS.

AECOM

RLWTF-UP LOW LEVEL WASTE SUBPROJECT

CAB-104 PANEL TERMINATION

Los Alamos NATIONAL LABORATORY
PO Box 1663 Los Alamos, New Mexico 87545

BLDG: 281
SUBMITTED: MANNY TARN
APPROVED FOR RELEASE: ED ARTIOLA
TA-50

DRAWN: V DAWSON
DESIGN: S MOORE
CHECKED: G MOE
DATE: 5/8/14

CLASSIFICATION: UNCLASSIFIED
PROJECT ID: 100761
DRAWING NO: C55867
REV: 0
SHEET: E-6469A
64 OF 69

NO	DATE	CLOSE REQ	ADC	DESCRIPTION

DWN | DES | CHKD | SUB | APP

PROFESSIONAL ENGINEER STATE OF NEW MEXICO 21580 ELECTRICAL DRAWING
Stamp Applies Only to Electrical Items

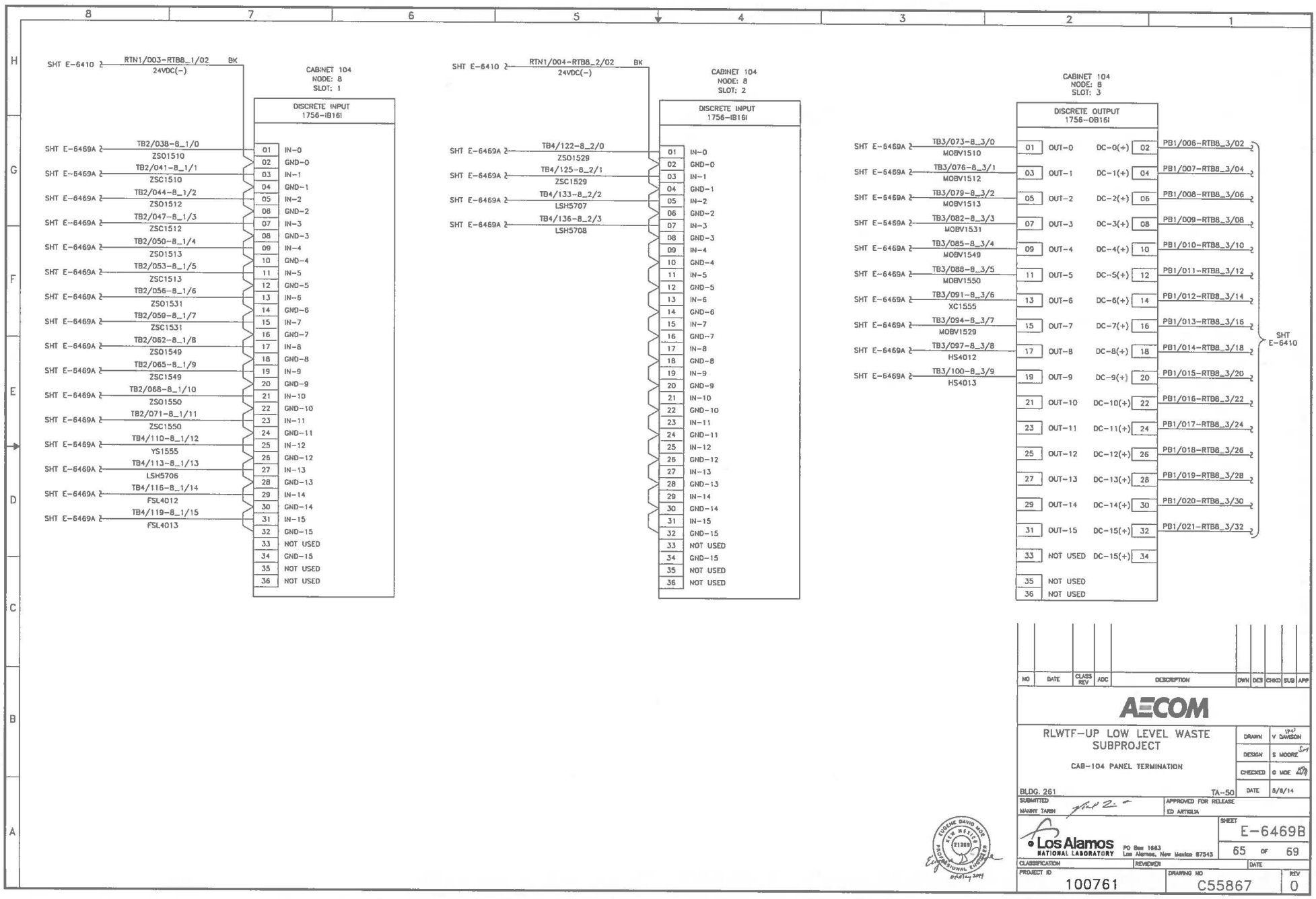
8
7
6
5
4
3
2
1
H
G
F
E
D
C
B
A
SHT E-6410
RTN1/003-RTB8_1/02
24VDC(-)
BK
CABINET 104
NODE: 8
SLOT: 1
DISCRETE INPUT
1756-IB16I
SHT E-6469A
TB2/038-8_1/0
ZSO1510
TB2/041-8_1/1
ZSC1510
TB2/044-8_1/2
ZSO1512
TB2/047-8_1/3
ZSC1512
TB2/050-8_1/4
ZSO1513
TB2/053-8_1/5
ZSC1513
TB2/056-8_1/6
ZSO1531
TB2/059-8_1/7
ZSC1531
TB2/062-8_1/8
ZSO1549
TB2/065-8_1/9
ZSC1549
TB2/068-8_1/10
ZSO1550
TB2/071-8_1/11
ZSC1550
TB4/110-8_1/12
YS1555
TB4/113-8_1/13
LSH5706
TB4/116-8_1/14
FSL4012
TB4/119-8_1/15
FSL4013
01 IN-0
02 GND-0
03 IN-1
04 GND-1
05 IN-2
06 GND-2
07 IN-3
08 GND-3
09 IN-4
10 GND-4
11 IN-5
12 GND-5
13 IN-6
14 GND-6
15 IN-7
16 GND-7
17 IN-8
18 GND-8
19 IN-9
20 GND-9
21 IN-10
22 GND-10
23 IN-11
24 GND-11
25 IN-12
26 GND-12
27 IN-13
28 GND-13
29 IN-14
30 GND-14
31 IN-15
32 GND-15
33 NOT USED
34 GND-15
35 NOT USED
36 NOT USED
SHT E-6410
RTN1/004-RTB8_2/02
24VDC(-)
BK
CABINET 104
NODE: 8
SLOT: 2
DISCRETE INPUT
1756-IB16I
SHT E-6469A
TB4/122-8_2/0
ZSO1529
TB4/125-8_2/1
ZSC1529
TB4/133-8_2/2
LSH5707
TB4/136-8_2/3
LSH5708
01 IN-0
02 GND-0
03 IN-1
04 GND-1
05 IN-2
06 GND-2
07 IN-3
08 GND-3
09 IN-4
10 GND-4
11 IN-5
12 GND-5
13 IN-6
14 GND-6
15 IN-7
16 GND-7
17 IN-8
18 GND-8
19 IN-9
20 GND-9
21 IN-10
22 GND-10
23 IN-11
24 GND-11
25 IN-12
26 GND-12
27 IN-13
28 GND-13
29 IN-14
30 GND-14
31 IN-15
32 GND-15
33 NOT USED
34 GND-15
35 NOT USED
36 NOT USED
CABINET 104
NODE: 8
SLOT: 3
DISCRETE OUTPUT
1756-OB16I
SHT E-6469A
TB3/073-8_3/0
MOBV1510
TB3/076-8_3/1
MOBV1512
TB3/079-8_3/2
MOBV1513
TB3/082-8_3/3
MOBV1531
TB3/085-8_3/4
MOBV1549
TB3/088-8_3/5
MOBV1550
TB3/091-8_3/6
XC1555
TB3/094-8_3/7
MOBV1529
TB3/097-8_3/8
HS4012
TB3/100-8_3/9
HS4013
01 OUT-0 DC-0(+) 02
03 OUT-1 DC-1(+) 04
05 OUT-2 DC-2(+) 06
07 OUT-3 DC-3(+) 08
09 OUT-4 DC-4(+) 10
11 OUT-5 DC-5(+) 12
13 OUT-6 DC-6(+) 14
15 OUT-7 DC-7(+) 16
17 OUT-8 DC-8(+) 18
19 OUT-9 DC-9(+) 20
21 OUT-10 DC-10(+) 22
23 OUT-11 DC-11(+) 24
25 OUT-12 DC-12(+) 26
27 OUT-13 DC-13(+) 28
29 OUT-14 DC-14(+) 30
31 OUT-15 DC-15(+) 32
33 NOT USED DC-15(+) 34
35 NOT USED
36 NOT USED
PB1/006-RTB8_3/02
PB1/007-RTB8_3/04
PB1/008-RTB8_3/06
PB1/009-RTB8_3/08
PB1/010-RTB8_3/10
PB1/011-RTB8_3/12
PB1/012-RTB8_3/14
PB1/013-RTB8_3/16
PB1/014-RTB8_3/18
PB1/015-RTB8_3/20
PB1/016-RTB8_3/22
PB1/017-RTB8_3/24
PB1/018-RTB8_3/26
PB1/019-RTB8_3/28
PB1/020-RTB8_3/30
PB1/021-RTB8_3/32
SHT E-6410
NO DATE CLASS REV ADC DESCRIPTION DWN DES CHKD SUB APP
AECOM
RLWTF-UP LOW LEVEL WASTE SUBPROJECT
CAB-104 PANEL TERMINATION
DRAWN V DAVISON
DESIGN S MOORE
CHECKED G MOE
DATE 5/8/14
BLDG. 261 TA-50
SUBMITTED MANNY TARIN
APPROVED FOR RELEASE ED ARTIGLIA
Los Alamos NATIONAL LABORATORY PO Box 1663 Los Alamos, New Mexico 87545
SHEET E-6469B
65 OF 69
CLASSIFICATION REVIEWER DATE
PROJECT ID 100761
DRAWING NO C55867
REV 0
EUGENE DAVID MOE 21989 NEW MEXICO PROFESSIONAL ENGINEER
File Location: P:\RLWTF LOW-LEVEL WASTE FACILITY\500 CAD\C55867 EFFLUENT STORAGE TANKS\SHEETS\16 ELECTRICAL\55867-E-64698-RG.DWG
Plotted By: DAWSON, WACEN Plot Date: Friday, May 02, 2014
94.1257

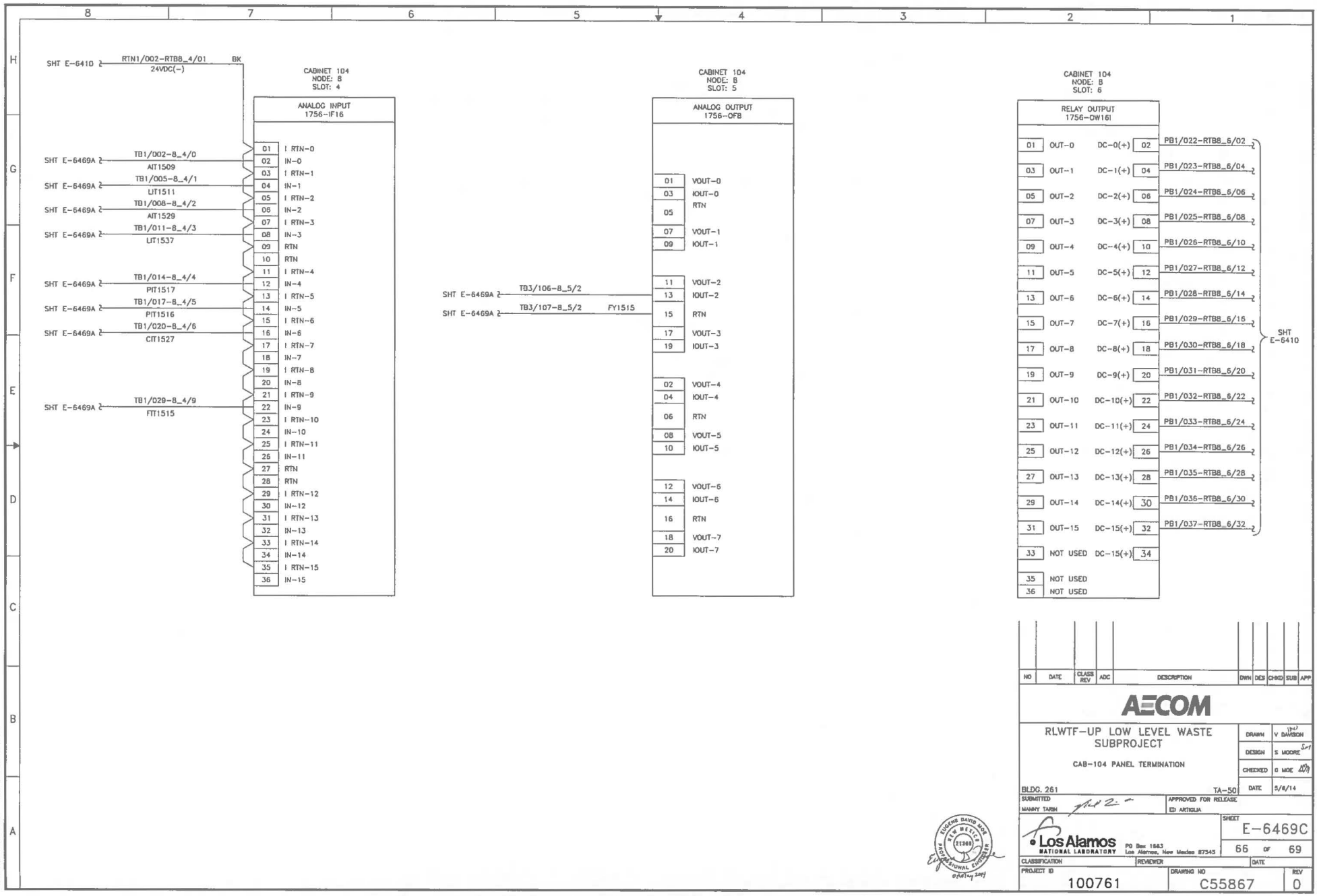
SHT E-6410
RTN1/002-RTB8_4/01
24VDC(-)
BK
CABINET 104
NODE: 8
SLOT: 4
ANALOG INPUT
1756-IF16
01 I RTN-0
02 IN-0
03 I RTN-1
04 IN-1
05 I RTN-2
06 IN-2
07 I RTN-3
08 IN-3
09 RTN
10 RTN
11 I RTN-4
12 IN-4
13 I RTN-5
14 IN-5
15 I RTN-6
16 IN-6
17 I RTN-7
18 IN-7
19 I RTN-8
20 IN-8
21 I RTN-9
22 IN-9
23 I RTN-10
24 IN-10
25 I RTN-11
26 IN-11
27 RTN
28 RTN
29 I RTN-12
30 IN-12
31 I RTN-13
32 IN-13
33 I RTN-14
34 IN-14
35 I RTN-15
36 IN-15
SHT E-6469A
TB1/002-8_4/0
AIT1509
TB1/005-8_4/1
LIT1511
TB1/008-8_4/2
AIT1529
TB1/011-8_4/3
LIT1537
TB1/014-8_4/4
PIT1517
TB1/017-8_4/5
PIT1516
TB1/020-8_4/6
CIT1527
TB1/029-8_4/9
FIT1515
CABINET 104
NODE: 8
SLOT: 5
ANALOG OUTPUT
1756-OF8
01 VOUT-0
03 IOUT-0
05 RTN
07 VOUT-1
09 IOUT-1
11 VOUT-2
13 IOUT-2
15 RTN
17 VOUT-3
19 IOUT-3
02 VOUT-4
04 IOUT-4
06 RTN
08 VOUT-5
10 IOUT-5
12 VOUT-6
14 IOUT-6
16 RTN
18 VOUT-7
20 IOUT-7
SHT E-6469A
TB3/106-8_5/2
TB3/107-8_5/2
FY1515
CABINET 104
NODE: 8
SLOT: 6
RELAY OUTPUT
1756-OW16I
01 OUT-0 DC-0(+) 02
03 OUT-1 DC-1(+) 04
05 OUT-2 DC-2(+) 06
07 OUT-3 DC-3(+) 08
09 OUT-4 DC-4(+) 10
11 OUT-5 DC-5(+) 12
13 OUT-6 DC-6(+) 14
15 OUT-7 DC-7(+) 16
17 OUT-8 DC-8(+) 18
19 OUT-9 DC-9(+) 20
21 OUT-10 DC-10(+) 22
23 OUT-11 DC-11(+) 24
25 OUT-12 DC-12(+) 26
27 OUT-13 DC-13(+) 28
29 OUT-14 DC-14(+) 30
31 OUT-15 DC-15(+) 32
33 NOT USED DC-15(+) 34
35 NOT USED
36 NOT USED
PB1/022-RTB8_6/02
PB1/023-RTB8_6/04
PB1/024-RTB8_6/06
PB1/025-RTB8_6/08
PB1/026-RTB8_6/10
PB1/027-RTB8_6/12
PB1/028-RTB8_6/14
PB1/029-RTB8_6/16
PB1/030-RTB8_6/18
PB1/031-RTB8_6/20
PB1/032-RTB8_6/22
PB1/033-RTB8_6/24
PB1/034-RTB8_6/26
PB1/035-RTB8_6/28
PB1/036-RTB8_6/30
PB1/037-RTB8_6/32
SHT E-6410
NO DATE CLASS REV ADC DESCRIPTION DWN DES CHKD SUB APP
AECOM
RLWTF-UP LOW LEVEL WASTE SUBPROJECT
CAB-104 PANEL TERMINATION
DRAWN V DAVISON
DESIGN S MOORE
CHECKED G MOE
DATE 5/8/14
BLDG. 261 TA-50
SUBMITTED MANNY TARIN
APPROVED FOR RELEASE ED ARTIGLIA
Los Alamos NATIONAL LABORATORY PO Box 1663 Los Alamos, New Mexico 87545
SHEET E-6469C
66 OF 69
CLASSIFICATION REVIEWER DATE
PROJECT ID 100761
DRAWING NO C55867
REV 0
EUGENE DAVID MOE NEW MEXICO 21368 PROFESSIONAL ENGINEER
51521 :
File Location: P:\RLWTF LOW-LEVEL WASTE FACILITY\300 CAD\C55867 ETTS\DWT STORAGE TANKS\SHEETS\18 ELECTRICAL\C55867-E-6469C-R0.DWG
Plotted By: DAVISON, WARREN Plot Date: Friday, May 02, 2014

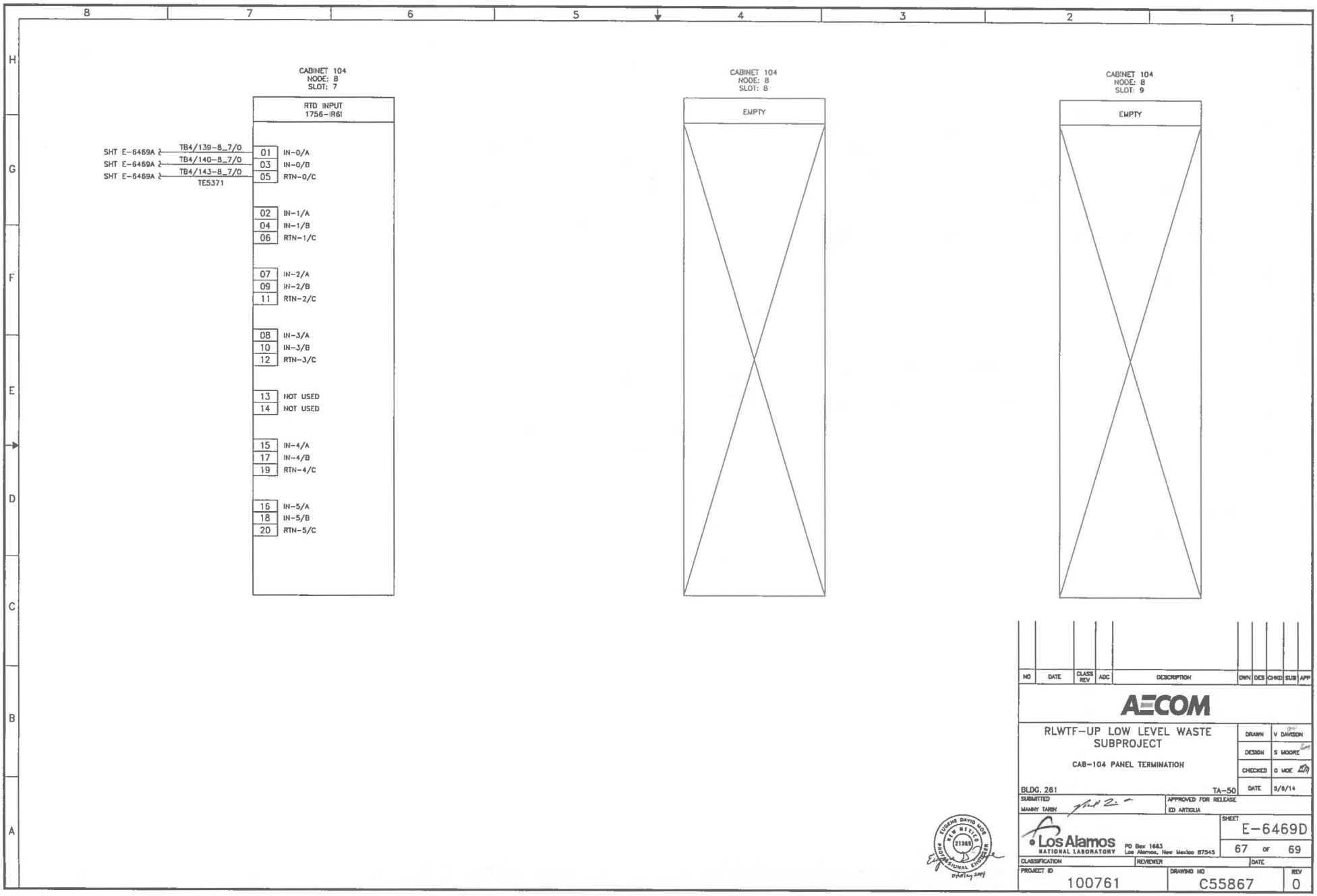

NO	DATE	CLASS REV	ADC	DESCRIPTION	DWN	DES	CHKD	SUB	APP

AECOM

RLWTF-UP LOW LEVEL WASTE SUBPROJECT

CAB-104 PANEL TERMINATION

DRAWN V DAVISON
DESIGN S MOORE
CHECKED G MOE
DATE 5/8/14

BLDG. 261 TA-50

SUBMITTED MANNY TARIN

APPROVED FOR RELEASE ED ARTIGLIA

Los Alamos NATIONAL LABORATORY PO Box 1663 Los Alamos, New Mexico 87545

SHEET E-6469D

67 OF 69

CLASSIFICATION REVIEWER DATE

PROJECT ID 100761

DRAWING NO C55867

REV 0

EUGENE DAVID MOE NEW MEXICO 21389 PROFESSIONAL ENGINEER

File Location: P:\RLWTF LOW-LEVEL WASTE FACILITY\300 CAD\C55867 EFFLUENT STORAGE TANKS\SHEETS\10 ELECTRICAL\355867-E-6469D-R0.DWG
Plotted By: DAVISON, VANESSA; Plot Date: Friday, May 02, 2014

9/6/21

TELECOMMUNICATIONS SYMBOL LEGEND

(ALL SYMBOLS SHOWN ARE NOT NECESSARILY USED ON THE DRAWINGS)

SYMBOL	DESCRIPTION
———	NEW WORK
– – – –	HIDDEN OR BURIED
	MULTI-OUTLET ASSEMBLY
	CABLE TRAY
	DUPLEX RECEPTACLE OUTLET
*	SPECIAL PURPOSE OUTLET – USE SUBSCRIPT TO IDENTIFY TYPE IN SPECS
C———	CONDUIT DOWN
O———	CONDUIT UP
•	CONDUIT UP AND DOWN
———	CONDUIT SEAL
	CONDUIT CAP
	TELECOMMUNICATIONS OUTLET (2-PORT VOICE)
	TELECOMMUNICATIONS OUTLET (4-PORT VOICE/DATA)
	FLOOR MOUNTED TELECOMMUNICATIONS OUTLET (4-PORT)
S	WALL SPEAKER, 15W
S	CEILING SPEAKER, 4W
J	JUNCTION BOX
——T——	TELECOMMUNICATIONS RACEWAY
1	KEYED NOTE DESIGNATION
3	ELECTRICAL EQUIPMENT DESIGNATION
5	MECHANICAL EQUIPMENT DESIGNATION
7	NAMEPLATE DESIGNATION

ABBREVIATIONS

AFF	ABOVE FINISHED FLOOR
BOT	BOTTOM OF TRAY
EXP	EXPLOSION PROOF
FCS	FACILITY CONTROL SYSTEM
GFE	GOVERNMENT FURNISHED EQUIPMENT
PA	PUBLIC ADDRESS SYSTEM
RGS	RIGID GALVANIZED STEEL
TC	TELECOMMUNICATION
WP	WEATHERPROOF

NO	DATE	CLASS REV	ADC	DESCRIPTION	DWN	DES	CHKD	SUB	APP

AECOM

RLWTF-UP LOW LEVEL WASTE SUBPROJECT

SYMBOL LEGEND AND ABBREVIATIONS

DRAWN V DAVIDSON

DESIGN S MOORE

CHECKED G MOE

DATE 5/8/14

BLDG. 261 TA-50

SUBMITTED MANNY TARIN

APPROVED FOR RELEASE ED ARTIOLA

Los Alamos NATIONAL LABORATORY PO Box 1663 Los Alamos, New Mexico 87545

SHEET T-0401

68 OF 69

CLASSIFICATION REVIEWER DATE

PROJECT ID 100761

DRAWING NO C55867

REV 0

EUGENE DAVID MOE NEW MEXICO 21389 PROFESSIONAL ENGINEER 07 May 2014

File Location: P:\RLWTF LOW-LEVEL WASTE FACILITY\300 CAD\C55867 EFFLUENT STORAGE TANKS\SHEETS\17 TELECOMMUNICATIONS\55867-T-0401-R0.DWG
Plotted By: DAVIDSON, VANESSA; Plot Date: Friday, May 02, 2014

C55867

GENERAL NOTES

1. IF THIS SHEET IS NOT 24" X 36", THEN IT IS A REDUCED SIZE PLOT. USE THE GRAPHIC SCALE ACCORDINGLY.
2. ALL CONDUIT IS 1" UNLESS OTHERWISE NOTED.
3. SEE SHEET T-0401 FOR GENERAL TELECOMMUNICATION NOTES, LEGEND AND ABBREVIATIONS.

KEYED NOTES

1. 1" UNDERGROUND CONDUIT TO LLW BUILDING TELECOMMUNICATIONS ROOM 1002. SEE DRAWING C55864, SHEET E-1110.
2. MOUNT PAGING SPEAKERS AT 8'-0" AFF.

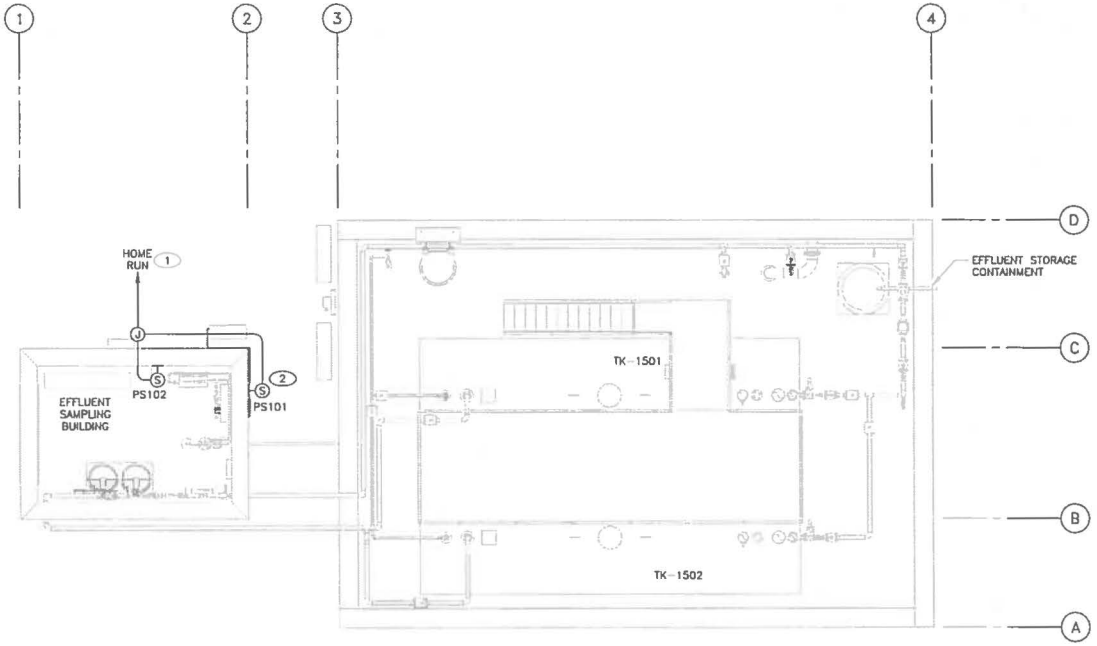

TELECOMMUNICATIONS PLAN

0' 1' 2' 4' 6' 8'
1/4"=1'-0"

NO	DATE	CLASS REV	ADC	DESCRIPTION	DWN	DES	CHKD	SUB	APP

AECOM

RLWTF-UP LOW LEVEL WASTE SUBPROJECT

TELECOMMUNICATIONS PLAN

BLDG. 261 TA-50

DRAWN	V DAVISON
DESIGN	S MOORE
CHECKED	G MOE
DATE	5/8/14

SUBMITTED: MANNY TARIN

APPROVED FOR RELEASE: ED ARTIGLIA

Los Alamos NATIONAL LABORATORY PO Box 1663 Los Alamos, New Mexico 87545

SHEET T-1400

69 OF 69

CLASSIFICATION | REVIEWER | DATE

PROJECT ID 100761 | DRAWING NO C55867 | REV 0

EUGENE DAVID MOE NEW MEXICO 21369 PROFESSIONAL ENGINEER

File Location: P:\RLWTF LOW-LEVEL WASTE FACILITY\500 CAD\C55867 EFFLUENT STORAGE TANKS\SHEETS\17 TELECOMMUNICATIONS\55867-T-1400-R0.DWG
Plotted By: DAVISON, VANESSA; Plot Date: Friday, May 02, 2014

12678

: 12679

GROUND WATER
AUG 07 2014
BUREAU

Environmental Protection Division
Environmental Compliance Programs (ENV-CP)
PO Box 1663, K490
Los Alamos, New Mexico 87545
(505) 667-0666

National Nuclear Security Administration
Los Alamos Field Office, A316
3747 West Jemez Road
Los Alamos, New Mexico, 87545
(505) 667-5794/Fax (505) 667-5948

Date: AUG 07 2014
Symbol: ENV-DO-14-0210
LAUR: 14-25995

Mr. Jerry Schoeppner, Chief
Ground Water Quality Bureau
New Mexico Environment Department
Harold Runnels Building, Room N2261
1190 St. Francis Drive
P.O. Box 26110
Santa Fe, NM 87502

Dear Mr. Schoeppner:

Subject: Filing of 100% Design Plans and Specifications, Radioactive Liquid Waste Treatment Facility Upgrade Project, Los Alamos National Laboratory, DP-1132

In accordance with Section 20.6.2.1202 of the New Mexico Administrative Code, *Filing of Plans and Specifications—Sewerage Systems*, the U.S. Department of Energy and Los Alamos National Security, LLC (DOE/LANS) are submitting the 100% design plans and specifications (Enclosure 1) for the Radioactive Liquid Waste Treatment Facility Upgrade Project (RLWTF UP) Low-Level Waste (LLW) subproject at Technical Area 50. The 90% design was submitted to the New Mexico Environment Department (NMED) in April 2014 (ADESH-14-020).

The current project schedule (Figure 1) for the RLWTF UP LLW subproject remains unchanged from the schedule submitted to NMED in April 2014. Construction is scheduled to begin during the 4th quarter of calendar year 2014 (1st quarter of federal fiscal year [FY] 2015). Accordingly, DOE/LANS request comments from NMED at the earliest opportunity.

Figure1. Project Schedule for the RLWTF UP LLW Subproject

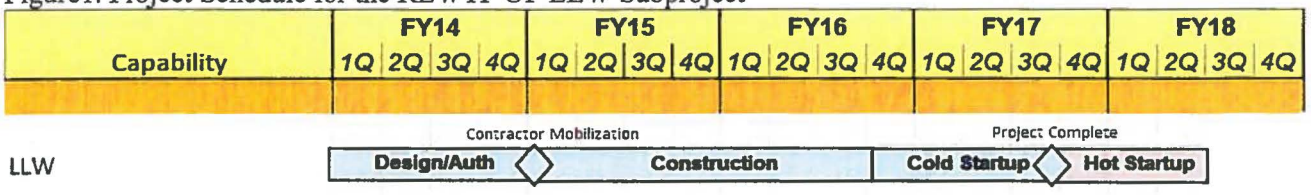

Please contact Robert S. Beers by telephone at (505) 667-7969 or by email at bbeers@lanl.gov if you have questions regarding these plans and specifications.

Sincerely,

Alison M. Dorries
Division Leader
Environmental Protection Division
Los Alamos National Security LLC

Sincerely,

Gene E. Turner
Environmental Permitting Manager
Environmental Projects Office
Los Alamos Field Office
U.S. Department of Energy

AMD:GET:RSB/ms

Enclosures:

1. Compact Disc (CD) containing the RLWTF Upgrade Project 100% Design Plans and Specifications

Cy: James Hogan, NMED/SWQB, Santa Fe, NM, (E-File)
John E. Kieling, NMED/HWB, Santa Fe, NM, (E-File)
Stephen M. Yanicak, NMED/DOE/OB, (E-File)
Hai Shen, NA-LA, (E-File)
Gene E. Turner, NA-LA, (E-File)
Kirsten Laskey, NA-LA, (E-File)
Eric L. Trujillo, NA-LA, (E-File)
Carl A. Beard, PADOPS, (E-File to aosburn@lanl.gov)
Michael T. Brandt, ADESH, (E-File)
Alison M. Dorries, ENV-DO, (E-File)
Richard P. Conner, PM1, (E-File)
Terry J. Singell, PADWP, (E-File)
Robert C. Mason, TA55-DO, (E-File)
William H. Schwettmann, IPM, (E-File)
Leslie K. Sonnenberg, ADNHHO, (E-File)
John C. Del Signore, TA-55 RLW, (E-File)
Randal S. Johnson, DSESH-TA55, (E-File)
Stephen G. Cossey, DSESH-TA55, (E-File)
Michael T. Saladen, ENV-CP, (E-File)
Robert S. Beers, ENV-CP, (E-File)
LASOmailbox@nnsa.doe.gov, (E-File)
locatesteam@lanl.gov, (E-File)
env-correspondence@lanl.gov, (E-File)

GROUND WATE
AUG 07 2014
BUREAU

ENCLOSURE 1

Compact Disc (CD) Containing the RLWTF Upgrade Project 100% Design Plans and Specifications

ENV-DO-14-0210

LAUR-14-25995

Date: AUG 07 2014

: 12682

: 12683

NEW MEXICO
ENVIRONMENT DEPARTMENT

Harold Runnels Building
1190 South St. Francis Drive (87505)
P.O. Box 5469, Santa Fe, New Mexico 87502-5469
Phone (505) 827-2900 Fax (505) 827-2965
www.nmenv.state.nm.us

SUSANA MARTINEZ
Governor

JOHN A. SANCHEZ
Lieutenant Governor

RYAN FLYNN
Cabinet Secretary

BUTCH TONGATE
Deputy Secretary

GROUND WATER QUALITY BUREAU MEETING WITH LANL/DOE
AUGUST 11, 2014
ON-GOING ISSUES WITH DP-1132 (RADIOACTIVE LIQUID WASTE TREATMENT FACILITY)

Ground Water Monitoring

The Ground Water Quality Bureau is currently in the process of further investigating the monitoring network, and therefore needs more time to respond in detail to the concerns expressed by Communities for Clean Water et al. (who will be referred to collectively as "CCW" throughout this response, but the Bureau understands that not all commenters fall within that group). In general, the Bureau has reviewed the information CCW provided and offers the following:

1. Alluvial monitoring well network
    a. Well MCO-3: The Bureau agrees that this well does not comply with Bureau well construction requirements. Los Alamos National Laboratory ("LANL")/ Los Alamos National Security ("LANS")/Department of Energy ("DOE") has proposed to replace this well with two alluvial wells in the general vicinity of well MCO3.
    b. Well MCO-7: The Bureau agrees that this well does not comply with Bureau well construction requirements and will evaluate options.
    c. Well MCIO-6: Additional information is required to fully evaluate this well and data generated from it.
2. Regional monitoring well network – additional time is required to evaluate the regional groundwater monitoring network.

Closure Plans

The Bureau is reviewing the closure requirements in the draft DP, as well as revisions proposed by LANL/DOE and CCW.

NPDES Language

CCW seeks more detail and lower limits on outfall discharges, and revisions to the permit's descriptive language about the NPDES exemption.

Definitions

CCW seeks the addition of a definition for "calibration" for discussion at the July 17 meeting. In regards to the "practice of engineering," the GWQB is looking into the issue further to determine if the change is allowable under the rules governing engineers working for federal

facilities/employers in the State of New Mexico. The GWQB is reviewing LANL/DOE's suggested changes to the definition of secondary containment.

CCW asserts that the definition of (and standard for) total polychlorinated biphenyls ("PCBs") be revised to use the congener method of analysis (not arochlor).

The GWQB is reviewing LANL's proposed revised definition of secondary containment,

Secondary Containment
CCW wants the type of gas used in the MES to be specified in the permit.

The GWQB is investigating where the 50 gallon per mile standard came from in Condition IV.A Paragraph 8. Based upon the outcome of its research, the GWQB will amend the language, if necessary.

Seismic Analysis
CCW seeks the addition of language requiring LANL/DOE to adhere to all federal requirements for seismic analysis for buildings. The GWQB assumes that DOE will adhere to its internal guidance and standards in relation to seismic analysis when submitting plans and specifications, and seeks input from LANL/DOE regarding this.

Standards and Limits
CCW wants the perchlorate limit lowered to the proposed standard in the 2005 draft, which apparently was included in anticipation of the U.S. Environmental Protection Agency ("EPA") promulgating a standard limit. However, EPA never approved a lower perc standard, so GWQB could not use the proposed lower limit. The GWQB is still working to determine where the limit in the draft permit originated, and what data supports the limit. Note the National Pollutant Discharge Elimination System ("NPDES") permit for Outfall-051 only requires reporting of this constituent.

CCW also wants lower limits for mercury, zinc and Radioactivity. The GWQB draft permit contains the current standard for these constituents in 20.6.2.3103 NMAC. Note the NPDES permit for Outfall-051 only requires reporting of mercury and zinc. 30 pCi/l for combined Radium-226 and Radium-228 is also the standard used in the NPDES permit for Outfall-051.

LANL/DOE proposes higher limits for total nitrogen discharge until the new treatment units at the RLWTF are operational. The GWQB is considering this option, and requests an updated timeframe from LANL for construction and operation of the new units.

Time Period for Installation/Calibration of Flow Meters
CCW wants a shorter time period for both installation and for calibration of flow meters. LANL/DOE has argued that, due to the technical challenges of the flow, the inability to "buy things off the shelf" for the facility, and the general bureaucracy involved, a realistic deadline would be 180 days. LANL's argument was convincing, and therefore, 180 days was placed in the permit. The GWQB has suggested that CCW query LANL about this at the group meeting, and

perhaps, after discussion, LANL would be willing to agree to reduce the timeframe for installation of the flow meters.

Clarification of Waste Tracking Data
CCW requested and the GWQB believes it is reasonable to amend the language in Section IV.B Paragraph 24 so that there are specific dates for wastes conveyed, as opposed to a time period.

Public Notice, Document Availability and Participation
CCW seeks public notice for each workplan, corrective action report, or proposal submitted for this DP; in particular, CCW wants in the DP the workplan for stabilization of the specific units, for closure, and for the emergency plans. However, this is not required under the regulations, nor has the GWQB ever placed such a provision in a permit. The GWQB has suggested that CCW discuss this with the group meeting, and perhaps, after discussion, LANL would be willing to agree to additional public participation.

This process (workplan proposal, GWQB review/approval, workplan implementation) is very typical and widely found in many GWQB discharge permits. The Bureau processes workplans in this matter because, at complex facilities, requiring closure workplans far in advance may not be practical due to the fact that there are too many unknown factors to accurately predict the specific details of such plans. The specified actions proposed by LANL/DOE for closure activities may be too limited and specific for the GWQB to include in the DP. The GWQB is working on compromise language to propose to the parties.

CCW wants all documents in the Electronic Reading Room; LANL/DOE has objected and wants to post only limited documents. These are not requirements typically placed in DPs, nor found in the WQA. CCW has indicated it is willing to discuss this with LANL/DOE at a group meeting, and perhaps, after discussion, LANL would be willing to agree to post additional documents. The GWQB is willing to discuss DP language exempting from enforcement and civil penalty provisions any voluntary document posting requirements.

Joint and Several Liability
LANL/DOE wants this language removed from the Introduction of the DP. The GWQB believes joint and several liability apply whether or not this language is in the DP, and is therefore willing to remove it.

Schedule and Process of PN-2 Draft Permit
The GWQB suggests releasing by the end of August a revised draft for discussion with all parties at a meeting in September, with a goal of publishing a second PN-2 draft in October or November, with a 30-day comment period.

: 12687

08/12/14 MEET & W/ LANL

SIGN-IN SHEET

JOHN HALL	NMED	505-660-8867	John.hall@state.n
Steve Huddleson	NMED	505-827-2936	Steven.Huddleson@State
CHRIS DEL SIGNORE	RLW	665-5952	JCDS@LANL.Gov
Joe English	LANL	667-9146	cenglish@lanl.gov
Thomas Longo	DOE/NNSA-HQ	301 903 8120	thomas.longo@nnsa.doe
Mike Salade (RLWTF Project manager)	LANS	665-6085	saladen@lanl.gov
Eric Trujillo	E ADM-NNSA	665-5914	Eric.Trujillo@nnsa.doe.g
Bob Beers	LANS	667-7969	bbeers@lanl.gov
Bill Schwettmann	LANS	667-8211	bills@lanl.gov
GENE TURNER	NNSA	667-5794	geneturner@nnsa.doe.g
Alison Perrins	LANS	665-6952	aperrins@lanl.gov
Tony Grieggs	LANS	6670666	grieggst@lanl.gov
Jennifer Pruett	NMED	827-0652	Jennifer.Pruett@state.nm.us
Erika Schwendel	NMED	827-1758	erika.schwendel@state.nm.u
TERRY SCHOEPPNER	"	827-2919	jerry.schoeppner@state.nm.u

Proposed Agenda
August 12, 2014
9:30am – 12:30pm
NMED—DOE/LANS Meeting RE: Draft Discharge Permit DP-1132

1. **Introductions & Thank You**

2. **Mr. Tom Longo** (DOE/NNSA, Office of Infrastructure & Operations, Washington, DC)
   - ✓ Tom would like to discuss with NMED a path forward on reviewing the RLWTF Upgrade Project.

3. **Mr. Gene Turner** (DOE/NNSA)
   - ✓ Gene will provide an update the on the MOA to providing funding support to the NMED GWQB for DOE/LANS groundwater permitting.

4. **Mr. Joe English** (LANS, Environmental Restoration Project)
   - ✓ Joe will give a brief overview and answer NMED questions concerning roles and responsibilities for closure and remediation of the RLWTF under the Consent Order.

5. **Mr. Chris Del Signore** (LANS, RLWTF)
   - ✓ Chris will provide a brief update on the 120-day WMRM Trial Period.
   - ✓ Chris will also brief the NMED on the TA-50-1 sump.

6. **Mr. Bob Beers** (LANS, Regulatory Compliance)
   - ✓ Bob will give a brief update on the modeling of travel times from the RLWTF to the regional aquifer.

7. **Ms. Jennifer Pruett** (NMED GWQB)
   - ✓ Jennifer would like to outline conceptually additional permit changes, areas where we see a lack of consensus, and the schedule for future milestones for this permit.

8-12-14 LANL meeting
Bob Beers - Regulatory Compliance

Tom Longo - DC.
Trans uranic waste ; several years out?
45th Construction Authorization on Low level waste construction $ from Dept Defense -
$20 mm upgrades to date and 3-5 mm/yr of maintenance
Capital expenditure process explained - lots of paper, lots of people.
Project is 'poised' to 'Start Construction' -
Project decision process due to history of failures, vulnerabilities,
original approach had been a single facility encompassing all aspects - costs ballooned, drop back to current scope. smaller waste volumes were reduced by 50% throughput by mod other processes - the RLWTF could operate at lower rad levels than the Transuranic Facility. Dec 2014 is proposed start date with 4 yr construction schedule.
what options - to bring in Transuranic - New permit, permit mod? NMED comments on 100% design would lower risk profile.

12690

Pg 2

LANL would offer the design engineer to go through design documents with NMED - priorities, must go to existing permits,

- MOA - money has been transferred from lab to DOE and available within weeks once language issues worked out.

Joe English - closure.
consent order is the RCRA closure - 1400 units under consent order, projects are lumped into 29 aggregate areas -
TA-50 is one aggregate area with 10 SMU asssociated with RLWTF.
outfall, vaults, tanks, lines, RLW facility included in these SMU

I want this ★ - investigation at upper Mortandad in 2009 sampling has been done in accessible areas
LANL evaluated existing data and deferred @ dd+l investigation post Demo of the facility this applies to 6 units of the 10 -
? does Haz Waste have this &? ?
there is some sediment impacts near outfall which will requir assessment -
- "we would have found any significant release -"

12691

③

Canyon Watershed Investigation under consent degree, this is facility wide - in TA-50 there are groundwater monitoring associated programs that are under purview of

✓ SMU 50-001A 50-001A
50-001B Active waste lines
50-02A

done ← Bob will provide lists.

1990 was transition date for RCRA corrective Action Program

Chris del Signore

April spent consolidating tanks, operator training,

May start up checklist ongoing - worked on operational checklists, found leaks,

- WMRM bldg 250 - 6 50,000 g Storage tanks - 2 tanks will be dedicated to influent Storage -

June - began sending influent to WMRM -

July filled TK-6 (tank) to 80% sampled -

12692

(4)

August- Start up testing complete, early august started operational with Rad Water-
will be completing testing by end of 120 day TP period.

TA-50-1 Sump constructed in 1963
all drains in bldg went to influent 75k tank- sink drains, floor drains, on track to stop using. would like to use 75K tank as sump.
- without it, catastrophic releases could exit building, =

- could do a static test- has never been done- this should be done regardless- LANL will complete study of tanks and capacities-
tank is currently OOS while 120 day permit period

Bob Beers
- infiltration modeling - Kay Burtsell, Phil Stoeffer did model
R-60 is source of lithology

12693

(5)

DTW 400 meters

FEHM Finite Element heat Mass Model - LANL developed - need to meet with modeler

JP.

Draft permit in Sept 2013 - received

Significant comments - withdrew PN 2,

- GW monitoring - under review -
- Closure - if SMU will be covered under Consent decree - won't be covered in permit
- calibration language solicited -
- Engineering Practices - is it adequately described in permit?
- PCB 1668 v. 8081 -
- Natural gas -
- 50 gallon/mile Standard?
- seismic analysis - what process do they use?
- Time frame for effluent volume (gpd??)
- Document - access - post?
-

Goal to have Draft DP by end of August, meet in Sept - PN 1? or PN 2?

(6)

- list of SMU's
- Copy of Montandad Cany Hydro Report - Purdyman reports
- Static water test @ 75k
- Modeling meeting -
- Presentation by project engineer
- Badge request through Arturo Duran?
- tour - 1 week notice

Environmental Protection Division
Environmental Compliance Programs (ENV-CP)
PO Box 1663, K490
Los Alamos, New Mexico 87545
(505) 667-0666

National Nuclear Security Administration
Los Alamos Field Office, A316
3747 West Jemez Road
Los Alamos, New Mexico, 87545
(505) 667-5794/Fax (505) 667-5948

Date: AUG 2 1 2014
Symbol: ENV-DO-14-0229
LAUR: 14-26444
Locates Action No.: N/A

Mr. Jerry Schoeppner, Chief
Ground Water Quality Bureau
New Mexico Environment Department
Harold Runnels Building, Room N2261
1190 St. Francis Drive
P.O. Box 26110
Santa Fe, NM 87502

GROUND WATER
AUG 22 2014
BUREAU

Dear Mr. Schoeppner:

Subject: **Request for Additional Information, Discharge Permit Application DP-1132, Radioactive Liquid Waste Treatment Facility**

On August 12, 2014, the New Mexico Environment Department (NMED), Ground Water Quality Bureau, met with the U.S. Department of Energy and Los Alamos National Security, LLC (DOE/LANS) to discuss draft Discharge Permit DP-1132 for the Technical Area (TA)-50 Radioactive Liquid Waste Treatment Facility (RLWTF). At the above-referenced meeting the NMED asked DOE/LANS to provide additional information on Solid Waste Management Units (SWMUs) and Areas of Concern (AOCs) at the RLWTF. The following enclosures provide the information requested:

- ✓ **Enclosure 1** contains a table listing units associated with the TA-50 RLWTF and their assigned SWMU or AOC number, if applicable. All units at the TA-50 RLWTF, including National Pollutant Discharge Elimination System (NPDES) Outfall No. 051, have been characterized as a SWMU or AOC, and are therefore subject to regulation under the Compliance Order on Consent (Consent Order, 2005), with the exception of the following three units:

    - TA-50-257 Mechanical Evaporator System (MES)
    - TA-52 Solar Evaporative Tank System (SET)
    - TA-50-250 Waste Mitigation and Risk Management Tanks (WMRM)

  As discussed at the August 12th meeting, the NMED Hazardous Waste Bureau has approved (through approval of the Upper Mortandad Canyon Aggregate Area Investigation Report) delaying

completion of Consent Order investigation activities at SWMUs 50-001(a), 50-002(a), and 50-002(b), and 50-002(c) and AOC 50-001(b) until decommissioning of the RLWTF.

✓ **Enclosure 2** contains an excerpt (only those pages relevant to the SWMUs and AOCs at the TA-50 RLWTF) from Los Alamos National Laboratory's *Investigation Report for Upper Mortandad Canyon Aggregate Area, Revision 1* (EP2010-0149, LA-UR-10-2046, April 2010).

Please contact Robert S. Beers by telephone at (505) 667-7969 or by email at bbeers@lanl.gov if you have questions regarding this information.

Sincerely,

Alison M. Dorries
Division Leader
Environmental Protection Division
Los Alamos National Security LLC

Sincerely,

Gene E. Turner
Environmental Permitting Manager
Environmental Projects Office
Los Alamos Field Office
U.S. Department of Energy

AMD:GET:RSB/lm

Enclosures:

1. Table of TA-50 RLWTF units and their assigned SWMU or AOC number
2. Excerpt from *Investigation Report for Upper Mortandad Canyon Aggregate Area, Revision 1* (EP2010-0149, LA-UR-10-2046, April 2010)

Cy: James Hogan, NMED/SWQB, Santa Fe, NM, (E-File)
John E. Kieling, NMED/HWB, Santa Fe, NM, (E-File)
Stephen M. Yanicak, NMED/DOE/OB, (E-File)
Hai Shen, NA-LA, (E-File)
Gene E. Turner, NA-LA, (E-File)
Kirsten Laskey, NA-LA, (E-File)
Carl A. Beard, PADOPS, (E-File to aosburn@lanl.gov)
Michael T. Brandt, ADESH, (E-File)
Raeanna Sharp-Geiger, ADESH, (E-File)
Alison M. Dorries, ENV-DO, (E-File)
Robert C. Mason, TA55-DO, (E-File)
William H. Schwettmann, IPM, (E-File)
Leslie K. Sonnenberg, TA-55-RLW, (E-File)
John C. Del Signore, TA-55-RLW, (E-File)
Randal S. Johnson, DSESH-TA55, (E-File)
Stephen G. Cossey, DSESH-TA55, (E-File)
Michael T. Saladen, ENV-CP, (E-File)
Robert S. Beers, ENV-CP, (E-File)

Cy (continued):
LASOmailbox@nnsa.doe.gov, w/enc., (E-File)
locatesteam@lanl.gov, w/enc., (E-File)
env-correspondence@lanl.gov

GROUND WATER
AUG 22 2014
BUREAU

ENCLOSURE 1

Table of TA-50 RLWTF units and their assigned SWMU or AOC number

ENV-DO-14-0229

LAUR-14-26444

Date: AUG 21 2014

: 12700

Table 1. RLWTF Unit Operations, Location, and SWMU or AOC Number, if applicable.

Unit Operation	Location	SWMU/AOC No.
Main Treatment:		
M1 Collection System-piping & vaults	TA-03, 35, 48, 50, 55, 59	AOC 50-001(b)
M2 Influent Storage WMRM Tanks (2)	50-250	NA
M3 Emergency Influent Storage (4)	50-250	NA
M4 Reaction Tanks	50-01	SWMU 50-001(a)
M5 Microfilter	50-01	SWMU 50-001(a)
M6 Pressure Filters	50-01	SWMU 50-001(a)
M7 Perchlorate Ion Exchange	50-01	SWMU 50-001(a)
M8 Primary Reverse Osmosis	50-01	SWMU 50-001(a)
M9 Cu-Zn Ion Exchange	50-01	SWMU 50-001(a)
M10 Effluent Storage	50-01	SWMU 50-001(a)
M11 Effluent Evaporator	50-257	NA
M11 Solar Evaporation	TA-52	NA
M11 NPDES Outfall #051	Mortandad Canyon	SWMU 50-006(d)
Transuranic:		
T1 Collection System-piping	TA-50, TA-55	AOC 50-001(b)
T2 Influent Storage	50-66	SWMUs 50-002(b,c)
T3 Treatment	50-01	SWMU 50-001(a)
T4 Drum Tumbling	50-01	SWMU 50-001(a)
T5 Effluent Storage	50-01	SWMU 50-001(a)
Secondary Treatment:		
S1 Secondary Reverse Osmosis	50-01	SWMU 50-001(a)
S2 Rotary Vacuum Filter	50-01	SWMU 50-001(a)
Vessels Scheduled for Retirement:		
75K tank	50-02	SWMU 50-002(a)
WM2-North	50-02	SWMU 50-002(a)
WM2-South	50-02	SWMU 50-002(a)
Clarifier #1	50-01	SWMU 50-001(a)
Clarifier #2	50-01	SWMU 50-001(a)
Gravity Filter	50-01	SWMU 50-001(a)
100K Tank	50-90	SWMU 50-001(a)

: 12701

ENCLOSURE 2

Excerpt from *Investigation Report for Upper Mortandad Canyon Aggregate Area, Revision 1*
(EP2010-0149, LA-UR-10-2046, April 2010)

ENV-DO-14-0229

LAUR-14-26444

Date: AUG 2 1 2014

: 12702

LA-UR-10-2046
April 2010
EP2010-0149

Investigation Report for Upper Mortandad Canyon Aggregate Area, Revision 1

: 12703

6.0 TA-50 BACKGROUND AND FIELD-INVESTIGATION RESULTS

6.1 Background of TA-50

TA-50 is located immediately northeast of the intersection of Pajarito Road and Pecos Drive and occupies an area of approximately 21 acres: 11.8 acres are associated with MDA C, and 8.7 acres are associated with the RLWTF. MDA C was used from 1948 until it was decommissioned in 1974 and consists of pits and shafts that received radioactive and hazardous wastes. Treatment facilities include the RLWTF and associated waste-transfer and storage systems, equipment-decontamination areas, and solid-waste volume-reduction facilities. Plate 6.1-1 shows the site features of TA-50.

Seven AOCs and 12 SWMUs located in TA-50 are addressed in this investigation report.

- SWMU 50-001(a) is the TA-50 RLWTF (building 50-1).
- AOC 50-001(b) is an active drainline system transferring liquid waste to the RLWTF.
- SWMU 50-002(a) is an underground reinforced concrete vault (building 50-2) that houses equipment, tanks, and transfer lines, all of which are associated with the RLWTF.
- Consolidated Unit 50-002(b)-00 consists of SWMUs 50-002(b and c).
    - ❖ SWMUs 50-002(b) and 50-002(c) are the waste tanks (structures 50-67 and 50-68, respectively) and associated inlet and outlet lines housed in an underground reinforced-concrete vault (structure 50-66) at the RLWTF.
- AOC 50-002(d) is a decommissioned aboveground 5000-gal. stainless-steel tank (structure 50-5) at the RLWTF.
- AOC 50-003(a) is a former RCRA interim status unit located in room 59 of building 50-1 to store containers of solid, cemented mixed-transuranic (TRU) sludge resulting from waste treatment activities.
- Consolidated Unit 50-004(a)-00 consists of SWMUs 50-004(a, b, and c).
    - ❖ SWMU 50-004(a) is the location of former underground radioactive liquid waste and industrial waste lines.
    - ❖ SWMU 50-004(b) is the location of a former underground vault (structure 50-3) that housed three stainless-steel lined concrete storage tanks.
    - ❖ SWMU 50-004(c) consists of 13 industrial waste lines and 3 associated manholes that discharged to the underground tank vault [SWMU 50-004(b)].
- SWMU 50-006(a) is the site of two accidental operational releases from the sump.
- SWMU 50-006(c) is the surface soil contamination at TA-50 resulting from the deposition of radioactive contaminants from historical stack emissions at TA-50.
- SWMU 50-006(d) is a TA-50 drainline (structure 50-64) and associated NPDES-permitted Outfall 051 in Mortandad Canyon for treated wastewater from the RLWTF.
- AOC 50-007 is the former incinerator complex in building 50-37.
- AOC 50-008 is formerly a volume reduction facility, currently the waste characterization, reduction, and repackaging facility (WCRRF), in building 50-69.
- SWMU 50-009 is MDA C.

: 12704

- AOC 50-010 is the former vehicle decontamination bay located in room 34B of the RLWTF, building 50-1.
- SWMU 50-011(a) is the former septic system at the south end of the RLWTF.
- AOC 50-011(b) are the two sanitary wastewater lift stations (structures 50-91 and 50-92) and associated piping.

6.1.1 Operational History

The TA-50 RLWTF was built in 1963 to meet the need for expanded treatment capability and to locate a treatment facility nearer the TAs generating the waste. This plant treats low-level wastewater from various areas of the Laboratory.

The incinerator complex (building 50-37), built in 1975, and the volume-reduction facility (building 50-69), built in 1983, were prototype facilities for developing and testing improved methods of handling and treating certain types of radioactive waste.

MDA C is a decommissioned material disposal area established to replace MDA B at TA-21 for disposal of Laboratory-derived waste. MDA C operated from May 1948 to April 1974 but received waste only intermittently from 1968 until it was decommissioned in 1974.

6.1.2 Summary of Releases

Process wastes were generated at TA-50 by the radioactive and nonradioactive liquid and solid waste treatment facilities. Liquid wastes were monitored and then released to Mortandad Canyon. Currently, most of the liquid wastes from the volume reduction and incinerator facilities are transferred by drainline to the liquid waste treatment plant, where they are treated as radioactive industrial waste. Liquid TRU wastes are transferred to the special TRU-treatment facilities in the liquid waste treatment plant.

Stack air from hoods, off-gas, and/or ventilation systems in the liquid treatment, volume reductions, and incinerator facilities was monitored and filtered to remove particulates and contaminants.

Contaminants may have been released to surface soil during the period when wastes were actively disposed of at MDA C. Fires in the disposal pits at MDA C have been recorded (LANL 1992, 007672) and may have released contamination to surface soil and air. Gas or vapor-phase contaminants may diffuse from waste and mix with air in the shafts or pits, then diffuse through the air-filled pores in the subsurface rock.

6.1.3 Current Site Usage and Status

TA-50 is an active site and is almost completely developed, with the exception of the 1.8 acres that comprises MDA C. Roads and large paved parking areas surround the buildings and structures.

6.2 SWMU 50-001(a)—Wastewater Treatment Facility

6.2.1 Site Description and Operational History

SWMU 50-001(a) consists of the TA-50 RLWTF (building 50-1) (Figure 6.2-1). This treatment plant treats LLW water from various parts of the Laboratory. The TA-50 RLWTF has operated continuously since its construction in 1963. The TA-50 RLWTF primarily removes TRU elements using neutralization, flocculation and clarification, pH control, ion-exchange filtration, and ultrafiltration, and reverse-osmosis

processes. Treated effluent is monitored and discharged to an NPDES-permitted outfall [SWMU 50-006(d)] in Mortandad Canyon. Associated with the TA-50 RLWTF is a system of drainlines and tanks that transfers, treats, and temporarily stores the liquid waste and treated sludge. The drainlines and tanks are not part of SWMU 50-001(a). The drainlines are SWMU 50-001(b), and the tanks are SWMU 50-002(a) and Consolidated Unit 50-002(b)-00.

In July 1990, core samples collected from boreholes drilled through the floor of building 50-1, around the pH-adjustment tank (also known as the grit chamber), indicated the inlet line to the pH-adjustment tank had leaked. Therefore, influent wastes were rerouted to building 50-2 (LANL 1992, 007672).

6.2.2 Relationship to Other SWMUs and AOCs

SWMU 50-001(a) is the TA-50 RLWTF that treats LLW water from various parts of the Laboratory. Associated with the TA-50 RLWTF is a system of drainlines and tanks [SWMUs 50-001(b) and 50-002(a) and Consolidated Unit 50-002(b)-00] that transfers, treats, and temporarily stores liquid waste and treated sludge. Consolidated Unit 50-004(a)-00 is the former underground RLW and industrial waste systems that connected to RLWTF (only one component, waste line 56, still exists). Treated effluent at RLWTF is monitored and discharged to an NPDES-permitted outfall [SWMU 50-006(d)] in Mortandad Canyon. SWMU 50-011(a) is a former septic system at the south end of RLWTF. Also, AOCs 50-002(d), 50-003(a), and 50-010 are located within the RLWTF.

6.2.3 Summary of Previous Investigations for SWMU 50-001(a)

No previous investigation activities have been conducted at SWMU 50-001(a).

6.2.4 Delayed Site Investigation Rationale

SWMU 50-001(a) consists of an active RLWTF that is also a Hazard Category 2 Nuclear Facility. The investigation work plan (LANL 2008, 100750) proposed delaying site characterization and investigation until future D&D of the RLWTF. NMED approved this proposal (NMED 2008, 101110).

6.3 AOC 50-001(b)—Waste Lines and Manholes

6.3.1 Site Description and Operational History

AOC 50-001(b) is the active underground drainline system through which RLW is collected and transferred throughout TA-50 facilities, including the RLWTF (building 50-1) (Figure 6.3-1). The collection system was installed in 1982 and typically consists of an 8-in.-diameter high-density polyethylene (HDPE) pipe (to protect against corrosion) within a 12-in.-diameter HDPE pipe that provides double containment and a leak-detection system. Underground vaults and manholes were installed at piping junctions and other strategic locations. At each vault/manhole, the outer pipe on the RLW line terminates at the structure wall to allow the annular space to be monitored for the detection of leaks from the inner piping (Appendix C, C-10a through C-10d). Each vault/manhole is equipped with transmitting detectors that will signal an alarm to the RLWTF monitoring stations if any liquid is detected in the annulus between the inner and outer pipes. The RLW lines and vaults/manholes are sloped to provide gravity flow so any liquid from a leak in the interior line would flow within the containment pipe to the downstream vault/manhole where it would be detected. Each vault/manhole provides secondary containment for piping running through the structure and is equipped with a sump and a liquid sensor that will transmit an alarm to the RLWTF monitoring stations if any liquid is detected. The interior of each vault/manhole is coated to prevent infiltration of any contaminated liquid waste. All penetrations to each vault/manholes are sealed to

prevent the infiltration of surface water (Appendix C, C-10a through C-10d). The leak detection system on the RLW collection system is tested routinely, and the vaults are inspected monthly. The leak detection system has never indicated leakage of waste from the inner pipe into the outer containment pipe.

Vault/manhole 50-072 is the central collection area at the TA-50 RLWTF for most incoming RLW. Three RLW lines feed into vault 50-072:

- In 1982, a major line connecting several TAs to this vault was constructed to replace an old RLW line [Consolidated Unit 50-004(a)-00]. The new RLW line consists of a double polyethylene pipe that enters structure 50-72 from the north side of Pecos Drive (LANL 1992, 007672).
- Another RLW line tied into structure 50-72, completed in 1982, transports RLW from structure 50-73 (a vault), which receives wastes from building 50-69 (a volume reduction facility, AOC 50-008) and building 50-37 (the incinerator complex, AOC 50-007). This line is a 6-in. polyethylene line within a 10-in. polyethylene line.
- A third line, also installed in 1982, transports RLW from TA-55 to structure 50-72 through two manholes (structures 50-16 and 50-78). The line consists of an inner stainless-steel pipe within a polyvinyl chloride (PVC) pipe.

A single drainline carried all influent from structure 50-72 into the grit tank at building 50-1 until a leak around the grit tank was detected in 1990 (LANL 1992, 007672). The line now bypasses the grit chamber and passes through the neutralization chamber before it connects to the building 50-2 tank vault [SWMU 50-002(a)]. This portion of the line consists of an inner 8-in. schedule 40 stainless-steel pipe and an outer 10-in. schedule 10 stainless-steel pipe. Structure 50-7, another manhole of the influent RLW collection system, is connected to the waste line from the tank truck unloading station (structure 50-77). Structure 50-7 has been out of service since the early 1990s (LANL 1992, 007672).

Four other RLW lines run from TA-55 to building 50-1 through structure 50-106 to tanks in an underground vault (structure 50-66). Three of the lines are 1.5-in. stainless-steel lines, each located within an outer 3-in. PVC pipe. Two of the three lines carry caustic and acid TRU wastes with high radioactivity. The third line is a spare that has never been used. The fourth line, which is for non-TRU industrial waste, is a 2-in.-diameter stainless-steel line within an outer 3-in. PVC. The lines operate by gravity flow, and the end of each is monitored continuously for leaks at TA-55 and at two acid pits (structures 50-57 and 50-66) by a drip-tray and conductivity probe system wired to a computer for continuous readout. The three nonindustrial waste lines were replaced in 1994. The new lines were tied into the existing lines in 2005 and were put into service in 2008. According to the 1990 SWMU report, there was some concern about contamination from the waste lines carrying TA-55 effluent because the original vacuum seals reportedly lost their integrity (LANL 1990, 007513). However, the drip pans at TA-55 and TA-50 have never collected fluid that would have indicated a release from the inner waste lines. The area where the lines enter building 50-1 and the area west and north of the RLW tank farm (building 50-2) were sampled in August 1990; analytical results showed no radionuclides detected above BVs (LANL 1992, 007672).

6.3.2 Relationship to Other SWMUs and AOCs

AOC 50-001(b) is an active underground drainline system transferring liquid waste to the RLWTF [SWMU 50-001(a)]. One of the Consolidated Unit 50-004(a)-00 RLW lines was connected to a manhole of AOC 50-001(b) until 1982 when the line was removed and replaced with the new double-walled RLW line. Another waste line that transports low-level radioactive liquids from AOCs 50-007 and 50-008 also connects to the manhole of AOC 50-001(b). A drainline from the manhole of AOC 50-001(b) eventually connects to SWMU 50-002(a).

6.3.3 Summary of Previous Investigations for AOC 50-001(b)

During tie-in activities for the new RLW lines at TA-55 in 2005, six samples were collected from a depth of 0 to 0.5 ft beneath the bottom of the four existing AOC 50-001(b) RLW lines (13.5 ft to 14 ft bgs) in an excavation between buildings 55-4 and 55-2 (sample IDs MD50-05-60732, MD50-05-60733, MD50-05-60734, MD50-05-60735, MD50-05-60738, and MD50-05-60739) (Appendix C, C-10e through C-10l). The samples were field screened for radioactivity and submitted to the Laboratory's SMO for analysis of VOCs, SVOCs, perchlorate, metals, cyanide, gamma spectroscopy, americium-241, isotopic plutonium, isotopic uranium, tritium, strontium-90, and nitrates. Field screening showed no elevated radioactivity above background. No radionuclides were detected above BVs. Methylene chloride was detected in one sample. Chromium and zinc were each detected in one sample above BVs.

6.3.4 Delayed Site Investigation Rationale

Delayed investigation is proposed for AOC 50-001(b) because characterizing this site, which is located adjacent to an active nuclear facility, is not feasible. Site access for equipment needed for subsurface investigations is extremely limited. Available information, including the design features of the site, indicates a very low likelihood of past releases to the environment. Even if a release had occurred, any residual contamination would be located beneath buildings or paved areas, effectively preventing exposure to receptors and preventing contact with infiltrating precipitation that could cause migration of contaminants.

The NMED approval with modifications letter (NMED 2008, 101110) required pressure testing of the waste lines associated with AOC 50-001(b). The waste collection lines and manholes were designed as a gravity flow system and were not designed to be pressure tested. Rather than using pressure testing as a means of integrity assessment, the system utilizes a double-containment leak-detection system. As described in section 6.3.1, all the drainline segments are double-containment lines, and the underground vaults provide double containment at all joints and connections. The double-containment design allows for continuous monitoring for leaks from the inner pipes that transport the wastewater. Leak-detection monitoring has been performed since the system was placed in service in 1982. No releases from the waste conveyance system to the environment have been detected, and the likelihood of undetected releases is very remote.

The leak detection system on the RLW collection system is routinely tested, and the vaults are inspected on a monthly basis. To date, all instances of detection of liquid within the containment vaults have been determined to have been caused by infiltration of stormwater rather than leaks from the pipes. The collection system is 27 yr old, and the seals on vault/manhole penetrations to prevent the infiltration of stormwater are degrading. Inspections conducted in 2007 and 2008 indicate stormwater is consistently infiltrating many of the manholes/vaults. Any water discovered in a manhole/vault is sampled and analyzed for gross-alpha radioactivity. To date, results have confirmed the source of water in the vaults/manholes is from infiltration of stormwater and not from leaks in the RLW lines (Appendix C, C-10m and C-10n). The Laboratory is in the process of implementing upgrades to the vaults, including replacing the seals. Three vaults were scheduled to be upgraded and sealed in fiscal year (FY) 2010. One vault has been completed in FY2010, and the other two vaults are scheduled to be completed by the end of July 2010. Three additional vaults will be upgraded and sealed in FY2011. The system will continue to be maintained and monitored for as long as it is operational. For these reasons, it is proposed that site characterization and investigation be delayed until future D&D of the TA-50 facility has been completed.

6.4 SWMU 50-002(a)—Underground Tanks

6.4.1 Site Description and Operational History

SWMU 50-002(a) consists of an underground, reinforced-concrete vault (building 50-2) (Figure 6.2-1) that houses an equipment room, six flow-through process tanks, and several waste-transfer lines, all of which are associated with the TA-50 RLWTF (building 50-1) (reference engineering drawings). The floor of the vault is 17 ft below ground. The holding tanks located within the vault (building 50-2) include two influent tanks (25,000 gal. and 75,000 gal.) and two 25,000-gal. tanks used to store treated waste for reuse. The fifth tank (capacity 25,000 gal.) flows into the 75,000-gal. tank and was previously used to store waste during D&D activities; this tank was equipped with a new liner and is available for standby use. The sixth tank (capacity 30,000 gal.) originally functioned as a holding tank for low-level sludge. In June 2001, the 30,000-gal. tank was drained, rinsed, and taken off-line by closing its valve; currently, this tank is available for standby use (Appendix C, C-11a through C-11g). The tanks are part of the building foundation with concrete tops and are not designed to be pressure tested. Each tank is equipped with level indicators tied into the RLWTF monitoring and alarm system that is monitored 24 hr/d.

Wastes are transported to the vault (building 50-2) through a system of transfer lines. Waste transfer lines include six cast-iron lines (including lines 55 and 67) connecting the RLWTF (building 50-1) to the equipment room in the vault (building 50-2); four steel lines added in 1984 to connect room 61 to the equipment room in building 50-2; five cast-iron lines from drains in building 50-1 and one cast-iron line from a sink in the former vehicle-decontamination bay in building 50-1 to the former D&D tank in building 50-2; an influent line connecting building 50-2 to a 100,000-gal. holding tank (structure 50-90); and an effluent line connecting the holding tank to one of the 25,000-gal. influent tanks in the building 50-2 vault. The waste transfer lines are equipped with flow-monitoring detectors and are not designed to be pressure tested.

In July and September 1974, two separate, unintentional operational releases occurred from the overflow of a sump in building 50-2. Both releases caused untreated wastewater to be discharged to waste lines 55 and 67 (the waste lines for treated effluent) and into the outfall area at the head of Ten Site Canyon [SWMU 50-006(a)]. In February 1975, waste line 67 was plugged at its outfall. In 1990, the integrity of the building 50-2 concrete walls and the pipelines tied from the tank farm to building 50-1 were checked, and no leaks were found (LANL 1992, 007672). The area west and north of the RLW tank farm (building 50-2) was sampled by IT Corporation in August 1990; analytical results showed no radionuclides detected above BVs (LANL 1992, 007672). No drainlines other than waste line 67 have been abandoned and/or plugged, and all tanks in vault building 50-2 remain active.

6.4.2 Relationship to Other SWMUs and AOCs

All the components of SWMU 50-002(a) are associated with RLWTF [SWMU 50-001(a)]. In July and September 1974, two separate unintentional operational releases occurred from the overflow of a sump in SWMU 50-002(a). Both releases caused untreated wastewater to be discharged to through waste lines into the outfall area at the head of Ten Site Canyon [SWMU 50-006(a)].

6.4.3 Summary of Previous Investigations for SWMU 50-002(a)

During RFI activities implemented in 1995, one near-surface sample was collected from a depth of 0.33 to 0.66 ft bgs at SWMU 50-002(a); no additional RFI activities have been conducted at this SWMU. The sample was analyzed for metals, uranium, PCBs/pesticides, SVOCs, VOCs, gamma spectroscopy,

tritium, isotopic plutonium, isotopic uranium, and strontium-90. Chromium and cobalt were detected above BVs and tritium was detected above the BV.

6.4.4 Delayed Site Investigation Rationale

Delayed investigation is proposed for SWMU 50-002(a) because characterizing this site, which is located inside an active nuclear facility, is not feasible. Available information, including the design features of the site, indicates a very low likelihood of past releases to the environment. Even if a release had occurred, any residual contamination would be located beneath the floor of building 50-2, effectively preventing exposure to receptors and preventing contact with infiltrating precipitation that could cause migration of contaminants.

The NMED approval with modifications letter (NMED 2008, 101110) required pressure testing of the waste tanks and lines associated with SWMU 50-002(a). The waste collection and transfer system inside building 50-2 is not designed to be pressure tested and relies on other means of leak detection. As described in section 6.4.1, each tank in building 50-2 is equipped with a level indicator tied into the RLWTF monitoring and alarm system, which is monitored 24 hr/d, and the waste transfer lines are equipped with flow monitors. No releases from the tanks or waste transfer lines to the environment have been detected, and the likelihood of undetected releases is very remote.

The Laboratory is in the process of designing a new RLWTF at TA-50 that will include new influent and effluent storage tanks and new waste-transfer lines. The tanks in vault 50-002 and the waste transfer lines will continue to be maintained and monitored for as long as it is operational. For these reasons, it is proposed that site characterization and investigation be delayed until future D&D of vault 50-002 has been completed.

6.5 Consolidated Unit 50-002(b)-00—Vaulted Underground Tanks for TA-55 Waste

6.5.1 Site Description and Operational History

Consolidated Unit 50-002(b)-00 consists of SWMUs 50-002(b and c), two waste tanks (structures 50-67 and 50-68) and their associated inlet and outlet lines housed in an underground reinforced-concrete tank vault (structure 50-66) at the TA-50 RLWTF [building 50-1, SWMU 50-001(a)] (Figure 6.3-1). The concrete vault measures 18 ft × 16 ft × 14 ft deep and is located about 30 ft from the southwest corner of building 50-1. The two waste tanks and the tank vault were constructed exclusively to store radioactive caustic waste (structure 50-67) and acidic waste (structure 50-68) from TA-55, where TRU wastes are generated. TRU wastes are processed separately from other wastes. The inlet lines consist of four stainless-steel pipes encased in PVC. One line is a capped backup. The second line carries radioactive acid waste to the acid waste tank. The third line carries radioactive caustic waste to the caustic tank. Wastes are transferred from the tanks through two double stainless-steel lines to room 60, building 50-1. The operation is monitored for criticality hazards, and necessary adjustments are made before treatment. The fourth line carries RLW to a manhole (structure 50-72) [AOC 50-001(b)]. No documented releases are associated with Consolidated Unit 50-002(b)-00 (LANL 1992, 007672).

6.5.2 Relationship to Other SWMUs and AOCs

All components of Consolidated Unit 50-002(b)-00 are associated with RLWTF [SWMU 50-001(a)].

6.5.3 Summary of Previous Investigations for Consolidated Unit 50-002(b)-00

No previous investigation activities have been conducted at Consolidated Unit 50-002(b)-00.

6.5.4 Delayed Site Investigation Rationale

Consolidated Unit 50-002(b)-00 is an active system. The investigation work plan (LANL 2008, 100750) proposed that site characterization and investigation be delayed until the tanks are removed. NMED approved this proposal (NMED 2008, 101110).

6.6 AOC 50-002(d)—Aboveground Storage Tank

6.6.1 Site Description and Operational History

AOC 50-002(d) is a decommissioned aboveground 5000-gal. stainless-steel tank (structure 50-5) located at building 50-1 (the RLWTF) (Figure 6.6-1). The tank is outside and next to the north wall of room 63D. Before it was decommissioned, the tank was used to store product (nitric acid). The storage tank was part of the ion-exchange column system at the RLWTF (building 50-1). The ion-exchange system was designed to remove any radioisotopes not previously removed by the clariflocculator system at the RLWTF. Because the clariflocculator system was so successful in removing radioisotopes from wastewater to levels consistently below DOE limits at the time, the ion-exchange column was rarely used, and the tank was consequently never filled to capacity. In late 1964, a new tank (structure 50-5) replaced the original nitric acid tank after the original rubber-lined carbon steel tank reportedly leaked; however, there are no records documenting a release from the former tank. The new tank is supported on concrete saddles that extend 5 ft bgs. A concrete sump filled with limestone chips (structure 50-12) was installed beneath the new tank. The tank was vented to the sump to neutralize any nitric acid vapors emitted when the tank was filled. In accordance with the Laboratory's stormwater pollution prevention plan (SWPPP), concrete containment walls and a concrete slab were installed around the tank (Appendix C, C-12a). In 1996, the tank was decommissioned (emptied, triple rinsed, and all piping and valves disconnected from the building and plugged) (LANL 2000, 067470.24). Since the tank has been decommissioned it, cannot be pressure tested; however, visual inspection reveals the tank remains in good condition.

6.6.2 Relationship to Other SWMUs and AOCs

AOC 50-002(d) is next to the north wall of room 63D of building 50-1. AOC 50-003(a) is located in room 59 of building 50-1, which is immediately east of AOC 50-002(d).

6.6.3 Summary of Previous Investigations for AOC 50-002(d)

No previous investigation activities have been conducted at AOC 50-002(d).

6.6.4 Site Contamination

Sampling of the sump was performed beneath the storage tank, and the results of the investigation are described below. Investigation of the soil beneath the tank and sump will be delayed until the tank is removed (see section 6.6.7).

6.6.4.1 Swipe Sampling

Four swipe samples were collected from the concrete sump beneath the storage tank. The samples were analyzed for, TAL metals, PCBs, SVOCs, gamma-emitting radionuclides, isotopic plutonium, and isotopic uranium. Table 6.6-1 provides the sampling locations and analyses requested. Figure 6.6-1 shows the sampling locations.

6.6.4.2 Field-Screening Results

Because only swipe samples were collected at AOC 50-002(d), field screening was not performed.

6.6.4.3 Swipe Sampling Analytical Results

Inorganic Chemicals

Table 6.6-2 lists the inorganic chemicals detected on swipe samples from AOC 50-002(d). Discussion of inorganic chemicals on the swipe samples is presented in Appendix I, section I-6.5.1.

The inorganic chemicals detected on swipe samples at AOC 50-002(d) are aluminum, antimony, arsenic, barium, beryllium, cadmium, calcium, chromium, cobalt, iron, lead, magnesium, manganese, nickel, potassium, sodium, vanadium, and zinc. Because the tank was used only to store nitric acid, the inorganic chemicals detected are unrelated to AOC 50-002(d).

The sampling locations and detected concentrations of inorganic chemicals are shown in Figure 6.6-2.

Organic Chemicals

Table 6.6-3 lists the organic chemicals detected on swipe samples from AOC 50-002(d). Discussion of organic chemicals detected on the swipe samples is presented in Appendix I, section I-6.5.2.

The organic chemicals detected on swipe samples at AOC 50-002(d) are acenaphthene; anthracene; Aroclor-1260; benzo(a)anthracene; benzo(a)pyrene; benzo(b)fluoranthene; benzo(g,h,i)perylene; chrysene; fluoranthene; fluorene; indeno(1,2,3-cd)pyrene; 2-methylnaphthalene; naphthalene; phenanthrene; and pyrene. Because the tank was used only to store nitric acid, the organic chemicals detected are unrelated to AOC 50-002(d).

Sampling locations and detected concentrations of organic chemicals are shown in Figure 6.6-3.

Radionuclides

No radionuclides were detected on the swipe samples collected at AOC 50-002(d).

6.6.4.4 Nature and Extent of Contamination

The nature and extent of contamination at AOC 50-002(d) are discussed in Appendix I, section I-6.5.5.

Because the tank was used only to store nitric acid, the COPCs identified are unrelated to AOC 50-002(d). Further investigation is delayed (see section 6.6.7).

6.6.5 Summary of Human Health Risk Screening

A human health risk-screening assessment is not possible using the available data (swipe samples only) for AOC 50-002(d).

6.6.6 Summary of Ecological Risk Screening

An ecological risk-screening assessment is not possible using the available data (swipe samples only) for AOC 50-002(d).

6.6.7 Delayed Site Investigation Rationale

Delayed investigation is proposed for AOC 50-002(d) because characterizing this site, which is located next to an active nuclear facility, is not feasible. Site access for equipment needed for subsurface investigations is extremely limited. Available information, including the design features of the site, indicates a very low likelihood of past releases to the environment. Even if a release had occurred, any residual contamination would be located beneath buildings or paved areas, effectively preventing exposure to receptors and preventing contact with infiltrating precipitation that could cause migration of contaminants.

The NMED approval with modifications letter (NMED 2008, 101110) required pressure testing of the tank. The tank was not designed to be pressure tested, and alternate means of leak detection (e.g., inspections) were available. There is no available documentation to confirm the original 1964 nitric acid tank leaked. An undetected leak of nitric acid is unlikely because of safety concerns for the personnel. Even if minor releases had occurred, once the former tank was removed, excavation of soil to install of two 5-ft-deep concrete saddles for the new tank resulted in the removal of soil potentially contaminated from historical releases of nitric acid. Additionally, carbonates found in native basic soils would aid in neutralization of any released nitric acid. Residual nitrate would likely have biodegraded in the 44 yr since the first tank was removed. For these reasons, it is proposed that site characterization and investigation be delayed until future D&D of the TA-50 RLWTF has been completed.

6.7 AOC 50-003(a)—Container Storage Area

6.7.1 Site Description and Operational History

AOC 50-003(a) is a former RCRA interim-status unit that was located in room 59 of building 50-1 (Figure 6.2-1). This unit was used to store containers of solid, cemented, mixed-TRU sludge resulting from waste treatment activities. During its period of operation, this AOC operated in accordance with the requirements of 20.4.1.600 New Mexico Administrative Code (NMAC) 4.1 and 40 CFR 265, Subparts A–D and I. NMED approved clean closure for AOC 50-003(a) in November 2004 (NMED 2004, 098488). Investigation was not proposed in the investigation work plan (LANL 2008, 100750) because this is a RCRA closure site.

6.7.2 Relationship to Other SWMUs and AOCs

AOC 50-003(a) is located in room 59 of building 50-1, which is immediately east of AOC 50-002(d).

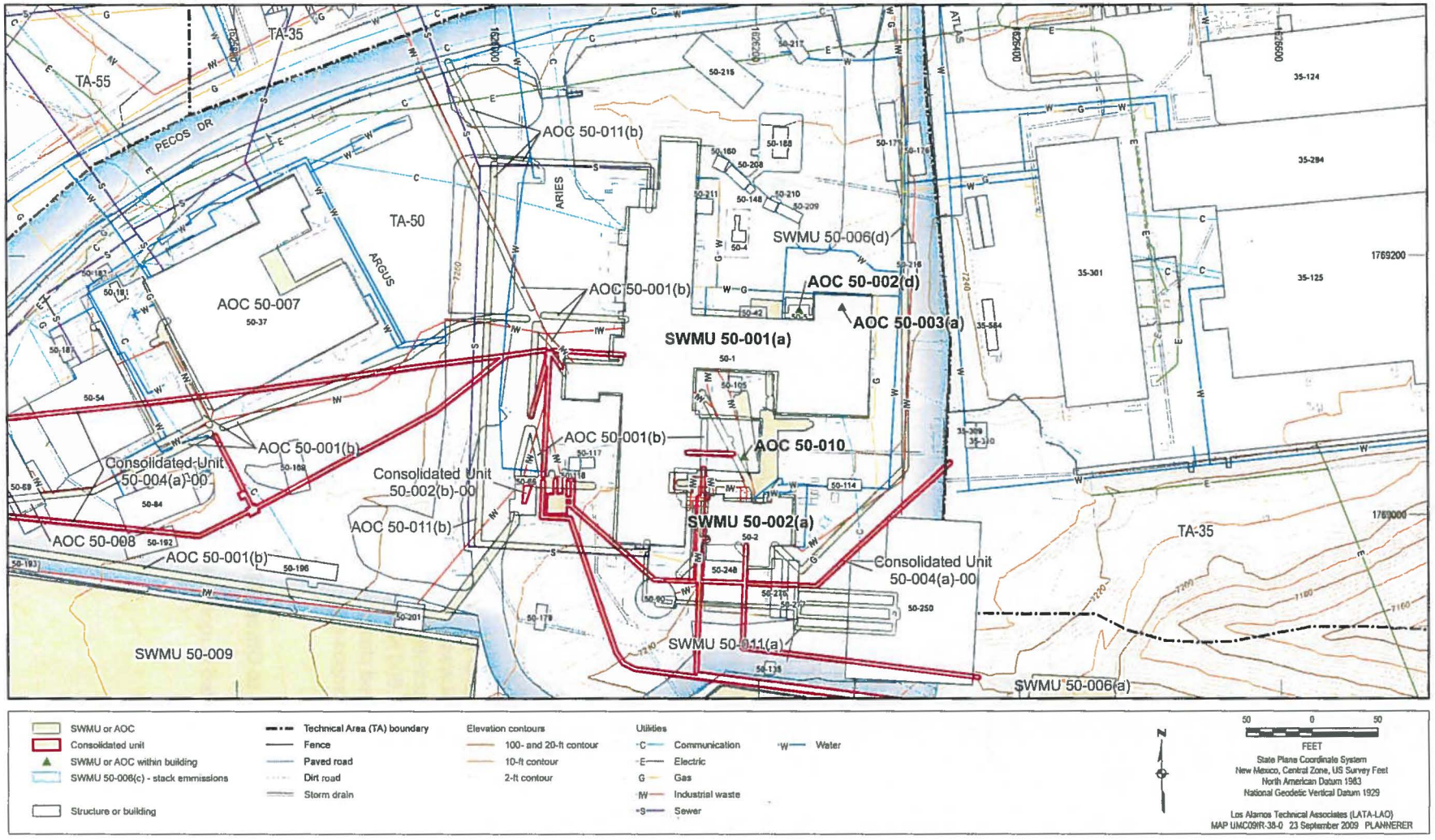

Figure 6.2-1 Site map of SWMU 50-001(a), SWMU 50-002(a), SWMU 50-002(d), AOC 50-003(a), and AOC 50-010

12714

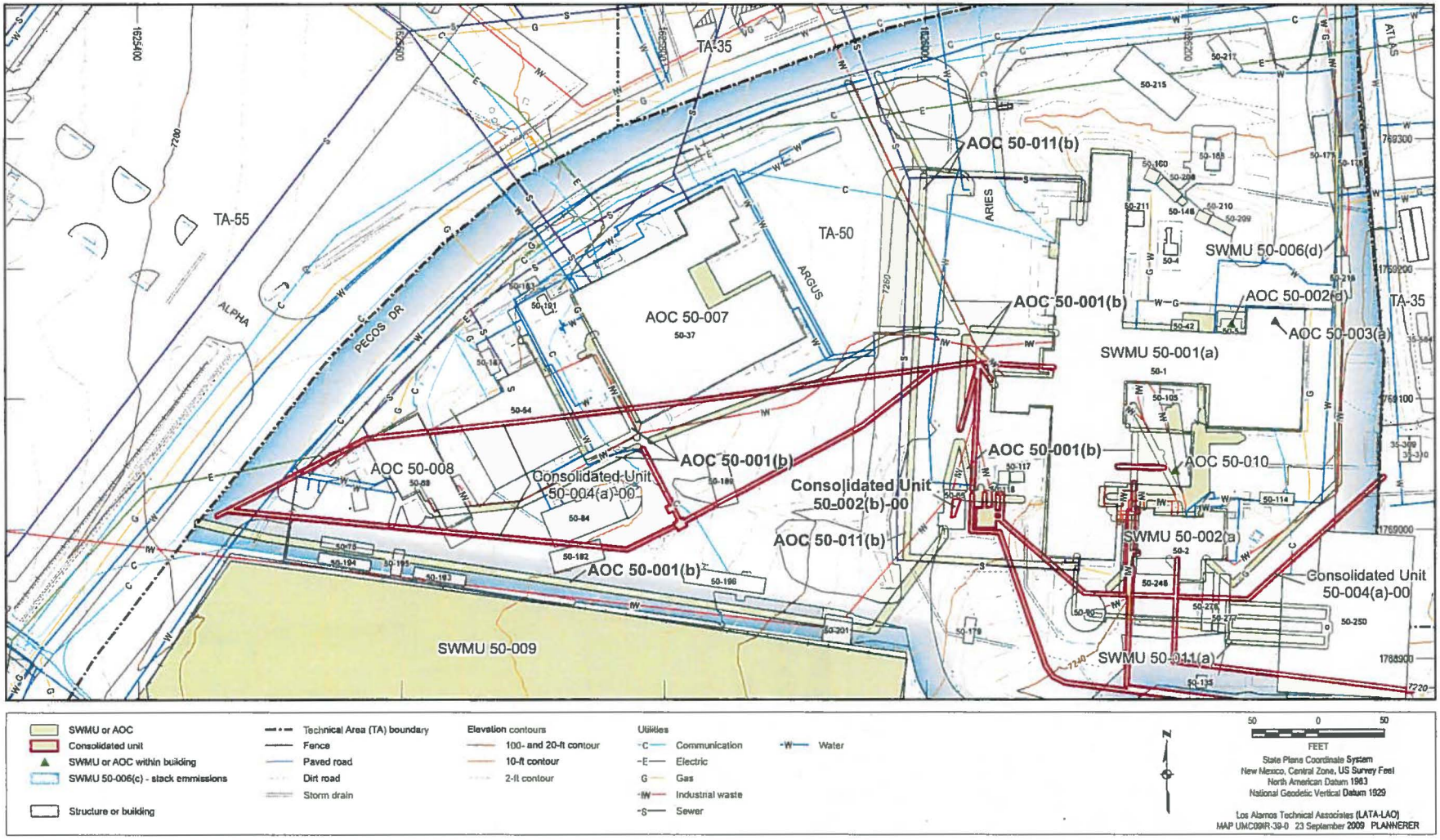

Figure 6.3-1 Site map of AOC 50-001(b), Consolidated Unit 50-002(b)-00, and SWMU 50-011(b)

51215

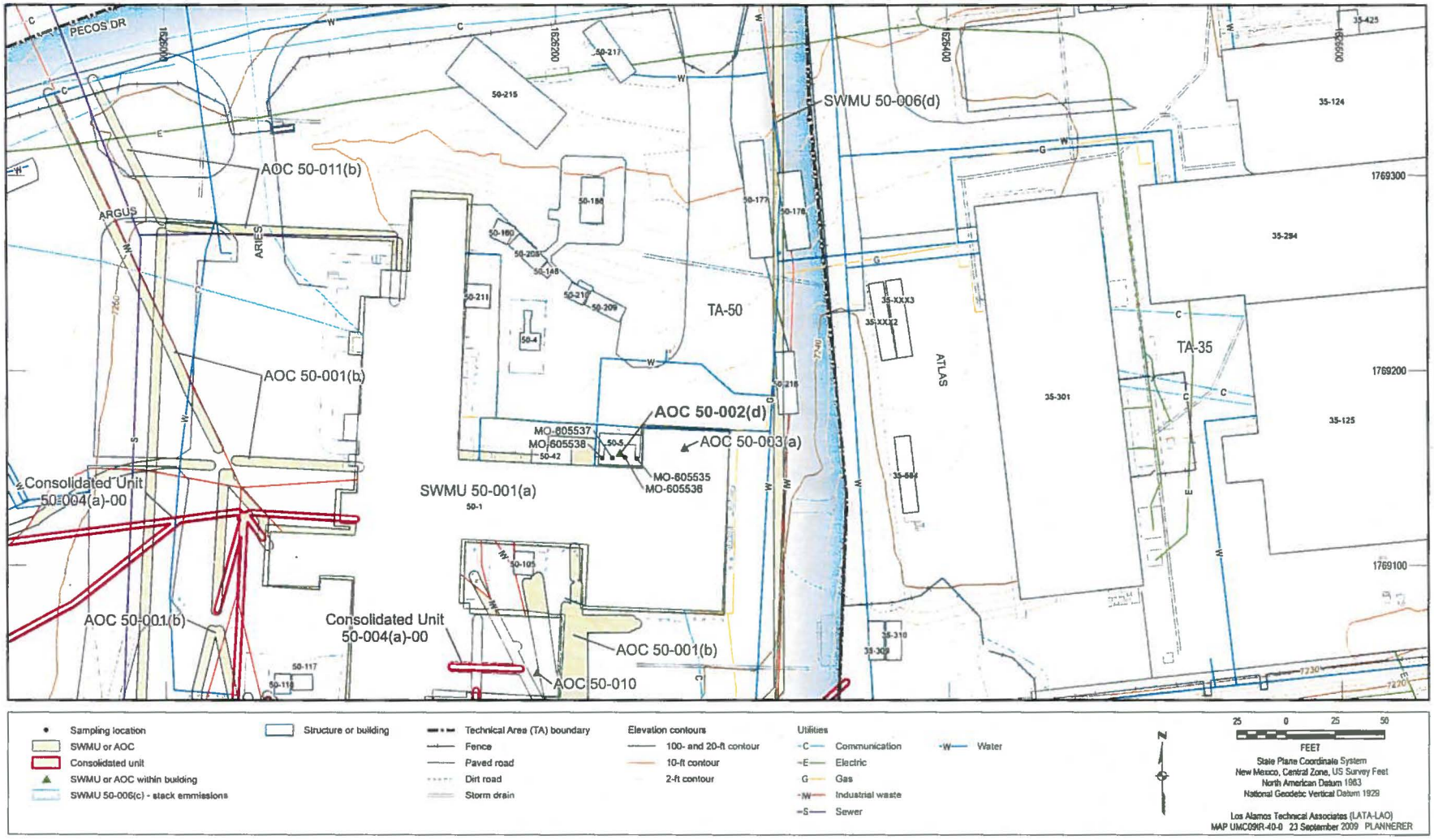

Figure 6.6-1 Site map and sampling locations at AOC 50-002(d)

12716

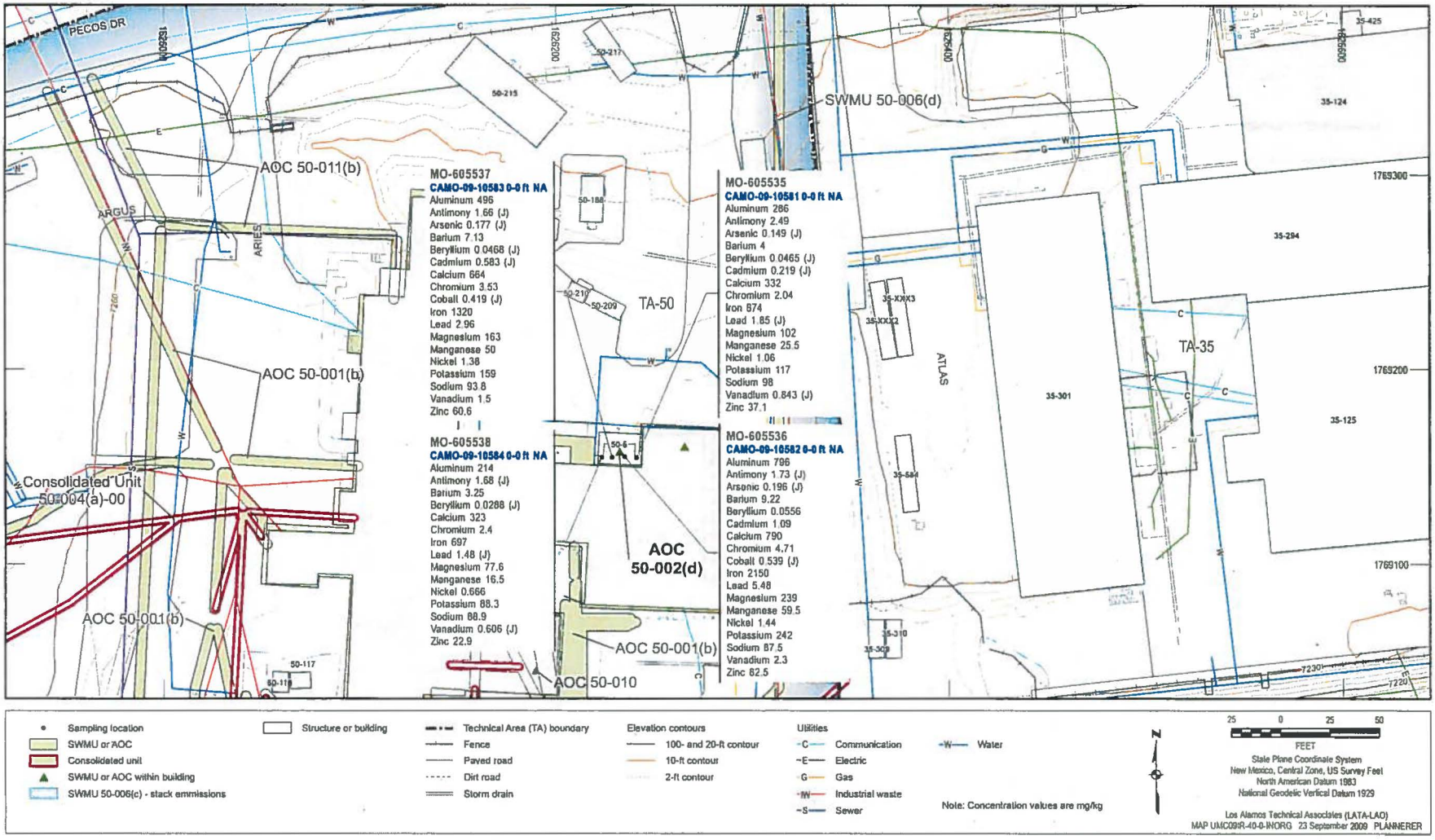

Figure 6.6-2 Inorganic COPCs detected or detected above BVs at AOC 50-002(d)

LA-UR-14-26444

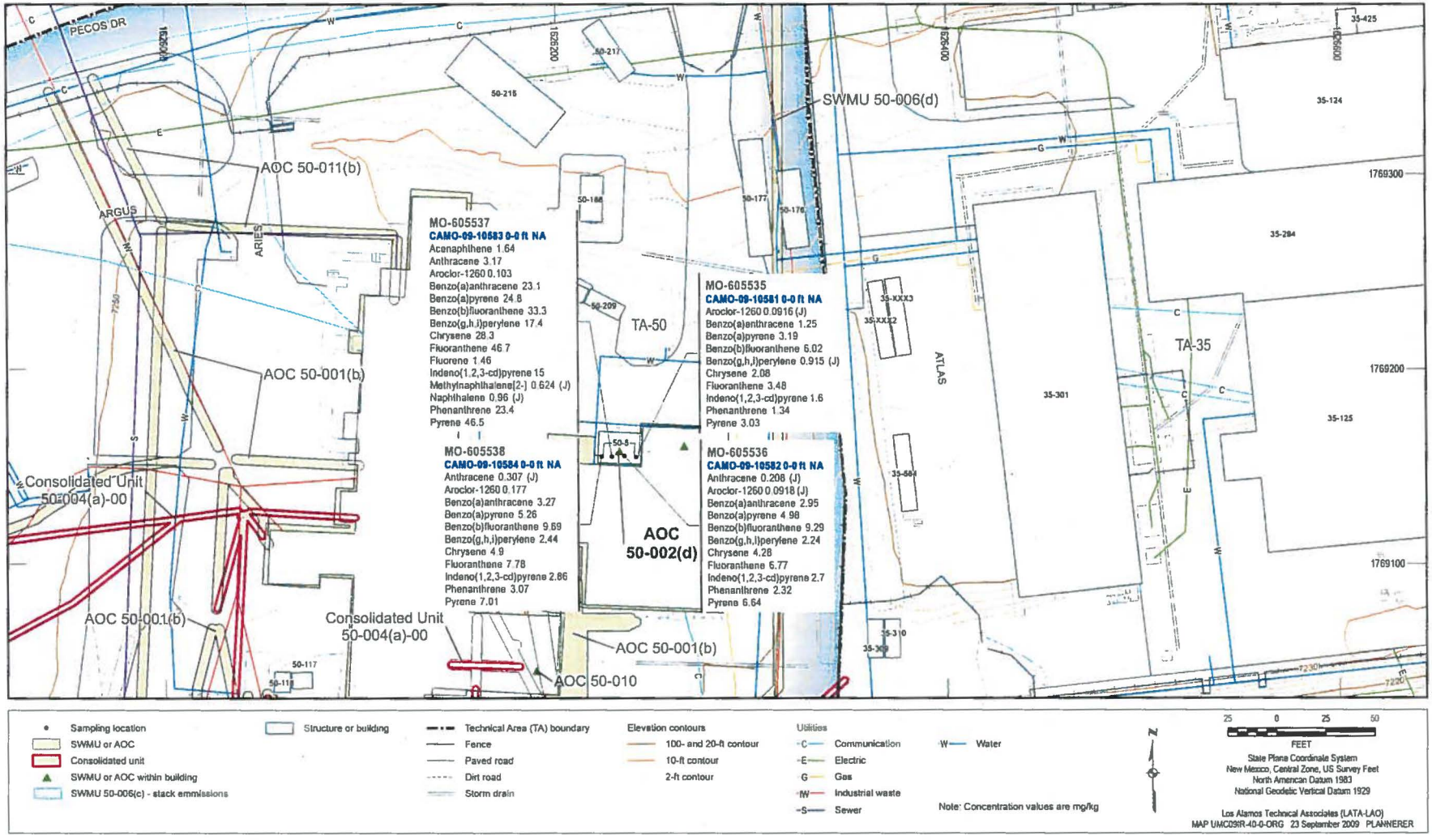

Figure 6.6-3 Organic COPCs detected at AOC 50-002(d)

Table 5.14-2
Organic Chemicals Detected at AOC 48-012

Sample ID	Location ID	Depth (ft)	Media	Acenaphthene	Anthracene	Benzo(a)anthracene	Benzo(a)pyrene	Benzo(b)fluoranthene	Benzo(g,h,i)perylene	Chrysene	Dibenz(a,h)anthracene	Dibenzofuran	Dimethylphenol[2,4-]	Fluoranthene	Fluorene	Indeno(1,2,3-cd)pyrene	Methylnaphthalene[2-]	Methylphenol[2-]	Methylphenol[4-]	Naphthalene	Phenanthrene	Pyrene
RE48-02-49520	48-02-21182	6.00–6.00	SOIL	—*	—	—	—	—	—	—	—	—	—	0.0658049	—	—	—	—	—	—	0.0587544	0.0599295
RE48-02-49521	48-02-21183	7.33–7.33	SOIL	10.6718	11.0441	17.3727	10.5477	12.3	3.22637	11.7886	9.6791	5.33591	0.310228	26.0591	9.30683	1.01755	3.7	0.198546	0.442	13.65	37.2273	34.7455
RE48-02-49523	48-02-21185	7.00–7.00	SOIL	—	—	—	—	—	—	—	—	—	—	0.0434783	—	—	—	—	—	—	—	0.0445931
RE48-02-49524	48-02-21186	6.50–6.50	SOIL	—	—	—	—	—	—	—	—	—	—	—	—	—	—	—	—	0.134529	—	—
RE48-02-49525	48-02-21187	6.00–6.00	SOIL	—	0.0433735	0.118072	—	0.113	—	0.0783133	—	—	—	0.180723	—	—	—	—	—	—	0.156627	0.228916
RE48-02-49529	48-02-21191	7.00–7.00	SOIL	—	—	—	—	—	—	—	—	—	—	—	—	—	—	—	—	0.0645527	—	—

Notes: Results are in mg/kg. Data qualifiers are presented in Appendix A.
* — = Not detected.

Table 6.6-1
Samples Collected and Analyses Requested at AOC 50-002(d)

Sample ID	Location ID	Depth (ft)	Media	Gamma Spectroscopy	Isotopic Plutonium	Isotopic Uranium	TAL Metals	PCBs	SVOCs
CAMO-09-10581	MO-605535	0.00–0.00	n/a*	09-2545	09-2545	09-2545	09-2545	09-2545	09-2545
CAMO-09-10582	MO-605536	0.00–0.00	n/a	09-2545	09-2545	09-2545	09-2545	09-2545	09-2545
CAMO-09-10583	MO-605537	0.00–0.00	n/a	09-2545	09-2545	09-2545	09-2545	09-2545	09-2545
CAMO-09-10584	MO-605538	0.00–0.00	n/a	09-2545	09-2545	09-2545	09-2545	09-2545	09-2545

Note: Numbers in analyte columns are request numbers.
* n/a = Not applicable (swipe samples).

61727

Table 6.6-2
Inorganic Chemicals above BVs at AOC 50-002(d)

Sample ID	Location ID	Depth (ft)	Media	Aluminum	Antimony	Arsenic	Barium	Beryllium	Cadmium	Calcium	Chromium	Cobalt	Iron	Lead	Magnesium	Manganese	Nickel	Potassium	Sodium	Vanadium	Zinc
Background Value				na[a]	na	na	na	na	na	na	na	na	na	na	na	na	na	na	na	na	na
CAMO-09-10581	MO-605535	0.00–0.00	n/a[b]	286	2.49	0.149 (J)	4	0.0465 (J)	0.219 (J)	332	2.04	—[c]	874	1.85 (J)	102	25.5	1.06	117	98	0.843 (J)	37.1
CAMO-09-10582	MO-605536	0.00–0.00	n/a	796	1.73 (J)	0.196 (J)	9.22	0.0556	1.09	790	4.71	0.539 (J)	2150	5.48	239	59.5	1.44	242	87.5	2.3	82.5
CAMO-09-10583	MO-605537	0.00–0.00	n/a	496	1.66 (J)	0.177 (J)	7.13	0.0468 (J)	0.583 (J)	664	3.53	0.419 (J)	1320	2.96	163	50	1.38	159	93.8	1.5	60.6
CAMO-09-10584	MO-605538	0.00–0.00	n/a	214	1.68 (J)	—	3.25	0.0288 (J)	—	323	2.4	—	697	1.48 (J)	77.6	16.5	0.666	88.3	88.9	0.606 (J)	22.9

Notes: Results are in µg/FILTER. Data qualifiers are presented in Appendix A.
[a] na = Not available.
[b] n/a = Not applicable (swipe samples).
[c] — = Not detected.

Table 6.6-3
Organic Chemicals Detected at AOC 50-002(d)

Sample ID	Location ID	Depth (ft)	Media	Acenaphthene	Anthracene	Aroclor-1260	Benzo(a)anthracene	Benzo(a)pyrene	Benzo(b)fluoranthene	Benzo(g,h,i)perylene	Chrysene	Fluoranthene	Fluorene	Indeno(1,2,3-cd)pyrene	Methylnaphthalene[2-]	Naphthalene	Phenanthrene	Pyrene
CAMO-09-10581	MO-605535	0.00–0.00	n/a[a]	—[b]	—	0.0916 (J)	1.25	3.19	6.02	0.915 (J)	2.08	3.48	—	1.6	—	—	1.34	3.03
CAMO-09-10582	MO-605536	0.00–0.00	n/a	—	0.208 (J)	0.0918 (J)	2.95	4.98	9.29	2.24	4.28	6.77	—	2.7	—	—	2.32	6.64
CAMO-09-10583	MO-605537	0.00–0.00	n/a	1.64	3.17	0.103	23.1	24.8	33.3	17.4	28.3	46.7	1.46	15	0.624 (J)	0.96 (J)	23.4	46.5
CAMO-09-10584	MO-605538	0.00–0.00	n/a	—	0.307 (J)	0.177	3.27	5.26	9.69	2.44	4.9	7.78	—	2.86	—	—	3.07	7.01

Notes: Results are in µg/FILTER. Data qualifiers are presented in Appendix A.
[a] n/a = Not applicable (swipe samples).
[b] — = Not detected.

I-5.12.3 Nature and Extent of Contamination at AOC 48-012

I-5.12.3.1 Nature and Extent of Organic COPCs

All the organic chemicals detected at AOC 48-012 are in samples collected in 2002. Four locations on the site boundary were sampled in 2009 to define the lateral and vertical extent of the organic chemicals. Because no organic chemicals were detected in samples collected in 2009, the lateral and vertical extent of the organic COPCs are defined.

I-5.12.3.2 Summary of Nature and Extent for AOC 48-012

The lateral and vertical extent of all organic COPCs are defined at AOC 48-012.

I-6.0 COPCs FOR SITES AT TA-50

I-6.1 SWMU 50-001(a)

SWMU 50-001(a) is proposed for delayed investigation. Section 6.2 of the investigation report presents the details for this site.

I-6.2 AOC 50-001(b)

AOC 50-001(b) is proposed for delayed investigation. Section 6.3 of the investigation report presents the details for this site.

I-6.3 SWMU 50-002(a)

SWMU 50-002(a) is proposed for delayed investigation. Section 6.4 of the investigation report presents the details for this site.

I-6.4 Consolidated Unit 50-002(b)-00

Consolidated Unit 50-002(b)-00 is proposed for delayed investigation. Section 6.4 of the investigation report presents the details for this site.

I-6.5 AOC 50-002(d)

Four swipe samples were collected in 2009 from four locations at AOC 50-002(d). Table 6.6-1 summarizes the samples collected and the requested analyses for each sample. Figure 6.6-1 shows the sampling locations.

I-6.5.1 Inorganic Chemicals at AOC 50-002(d)

All four swipe samples were analyzed for TAL metals. Table 6.6-1 summarizes the samples collected and the requested analyses for each sample.

Table 6.6-2 lists the inorganic chemicals detected on the swipe samples at AOC 50-002(d). The sampling locations and detected concentrations are shown in Figure 6.6-2.

The following inorganic chemicals were detected (units in µg/filter) on at least one swipe sample: aluminum, antimony, arsenic, barium, beryllium, cadmium, calcium, chromium, cobalt, iron, lead, magnesium, manganese, nickel, potassium, sodium, vanadium, and zinc.

I-6.5.2 Organic Chemicals at AOC 50-002(d)

All four swipe samples were analyzed for PCBs and SVOCs. Table 6.6-1 summarizes the samples collected and the requested analyses for each sample.

Table 6.6-3 lists the detected organic chemicals. The sampling locations and detected concentrations are shown in Figure 6.6-3.

The following organic chemicals were detected (units in µg/filter) on at least one swipe sample: acenaphthene; anthracene; Aroclor-1260; benzo(a)anthracene; benzo(a)pyrene; benzo(b)fluoranthene; benzo(g,h,i)perylene; chrysene; fluoranthene; fluorene; indeno(1,2,3-cd)pyrene; 2-methylnaphthalene; naphthalene; phenanthrene; and pyrene.

I-6.5.3 Radionuclides at AOC 50-002(d)

All four swipe samples were analyzed for gamma-emitting radionuclides, isotopic plutonium, and isotopic uranium. Table 6.6-1 summarizes the samples collected and the requested analyses for each sample.

No radionuclides were detected on the swipe samples at AOC 50-002(d).

I-6.5.4 Summary of COPCs at AOC 50-002(d)

Inorganic and organic chemicals were detected on the swipe samples, but are not identified as COPCs. No BVs are available for swipe samples, and performing risk-screening assessments with swipe sampling results is not possible.

The inorganic chemicals detected on swipe samples at AOC 50-002(d) are aluminum, antimony, arsenic, barium, beryllium, cadmium, calcium, chromium, cobalt, iron, lead, magnesium, manganese, nickel, potassium, sodium, vanadium, and zinc.

The organic chemicals detected on swipe samples at AOC 50-002(d) are acenaphthene; anthracene; Aroclor-1260; benzo(a)anthracene; benzo(a)pyrene; benzo(b)fluoranthene; benzo(g,h,i)perylene; chrysene; fluoranthene; fluorene; indeno(1,2,3-cd)pyrene; 2-methylnaphthalene; naphthalene; phenanthrene; and pyrene.

No radionuclides were detected on swipe samples at AOC 50-002(d).

I-6.5.5 Nature and Extent of Contamination at AOC 50-002(d)

I-6.5.5.1 Nature and Extent of Inorganic Chemicals

Although inorganic chemicals were detected on swipe samples, the extent of those inorganic chemicals was not evaluated. The nature of the swipe samples does not make possible an evaluation of the extent of contamination, but the nitric acid tank is located such that any leaks would be contained by the concrete sump, thus defining the extent of potential contamination.

I-6.5.5.2 Nature and Extent of Organic COPCs

Although organic chemicals were detected on swipe samples, the extent of those organic chemicals was not evaluated. The nature of the swipe samples does not make possible an evaluation of the extent of contamination, but the nitric acid tank is located such that any leaks would be contained by the concrete sump, thus defining the extent of potential contamination.

I-6.5.5.3 Summary of Nature and Extent for AOC 50-002(d)

The lateral and vertical extent of inorganic and organic chemicals are not defined by the swipe sampling results.

I-6.6 AOC 50-003(a)

AOC 50-003(a) was approved for clean closure by NMED in November 2004 (NMED 2004, 098488), and no further investigation is needed. Section 6.7 of the investigation report presents the details for this site.

I-6.7 Consolidated Unit 50-004(a)-00

A total of 156 samples (57 soil, 98 tuff, and 1 sediment) were collected in 1993, 1994, 2003, and 2009 from 58 locations at Consolidated Unit 50-004(a)-00. Table 6.8-1 summarizes the samples collected and the requested analyses for each sample. Figure 6.8-1 shows the sampling locations.

I-6.7.1 Inorganic Chemicals at Consolidated Unit 50-004(a)-00

Eighty-eight samples were analyzed for nitrate. One hundred and fifty-five samples were analyzed for TAL metals. Eighty-two samples were analyzed for perchlorate and total cyanide. Table 6.8-1 summarizes the samples collected and the requested analyses for each sample.

Table 6.8-2 lists the inorganic chemicals above BVs and detected inorganic chemicals that have no BVs. The sampling locations and detected concentrations are shown on Plate 6.8-1.

I-6.7.1.1 Inorganic Chemicals in Soil

Twenty-three soil samples were analyzed for nitrate. Fifty-six samples were analyzed for TAL metals. Twenty-two samples were analyzed perchlorate and total cyanide.

Aluminum was detected above the BV (29200 mg/kg) in 1 of 56 soil samples, at a concentration of 32,300 mg/kg. This sample result did not exceed the maximum background concentration of aluminum in soil (61500 mg/kg). Statistical tests were performed to determine if the site sampling results for aluminum are different than background. The statistical test results are presented in Table I-6.7-1. The results of both the Gehan test and the quantile test indicate that the site sampling results are not statistically different than background. The box plot for aluminum in soil is presented in Figure I-6.7-1. Aluminum is not identified as a COPC in soil.

Antimony was detected above the BV (0.83 mg/kg) in 1 of 56 soil samples, with a maximum concentration of 8.6 mg/kg. Antimony also had DLs (1.06–6.7 mg/kg) above the BV in 54 soil samples. These DLs also exceeded the maximum soil background concentration (1 mg/kg). Statistical tests could not be performed because more than 80% of the combined data (background and site data) are nondetected values. The box plot for antimony in soil is presented in Figure I-6.7-2. Antimony is identified as a COPC in soil.

: 12724

New Mexico Environment Department
Ground Water Quality Bureau

Inspection Report

Inspection Date: 08-25-2014 **DP #:** DP-1132

Facility Name: RLWTF – LANL/DOE

Facility Contact Information – Scheduling Inspection

☑ **Scheduled Inspection - provide contact information** ☐ **Unannounced Inspection**

Person Contacted: Bob Beers

Phone Number: 505-667-7969

Facility Description

Waste Type: Other

Directions to Facility: TA-50, Los Alamos National Laboratory

Inspection Information

Start Time: 10:00 AM **End Time:** 3:30 PM

NMED Inspector(s): Huddleson, Hall

Verify that NMED identification was presented: ☑ Yes ☐ No

Facility Representative(s) present during the Inspection/Discussion: Beers, Turner, Del Signore

Reason for Inspection: other

If "other", describe reason for inspection: Familiarize with processes involved, facility, and personnel prior to issuance of permit

Discussion, Observations and Information Obtained : Highly secure facility, all equipment and facility appear modern and well maintained.

Photographic Documentation

Photos Taken? ☐ Yes - see attached ☑ No Photos are not permitted

Sample Information

Samples Collected? ☐ Yes ☑ No

: 12725

Samples Collected by: N/A

Sample Id #s and locations:

Were samples split between permittee and NMED? ☐ Yes ☐ No ☐ N/A

Did the Facility Representative request copies of NMED's sampling results? ☐ Yes ☐ No ☐ N/A

Monitoring Well Camera Inspection

Monitoring well camera inspection conducted? ☐ Yes - see attached report(s)
☐ No

Initials of Report Preparer: SMH

: 12727

From: Pruett, Jennifer, NMENV
To: "Beers, Bob"
Cc: Huddleson, Steven, NMENV; Hall, John, NMENV; Schoeppner, Jerry, NMENV
Bcc: Hower, Jennifer, NMENV
Subject: RE: Progress on Re-draft of DP-1132 (LANL RLWTF)
Date: Friday, August 29, 2014 9:55:09 AM

Once again, Bob et al. – my apologies for our delay. I am working diligently with staff on this, and working on getting more people in the door, but that is a slow process in government that negatively affects all our permit holders.

I'm not sure what document you are referring to from our August 12 meeting. I believe that the document I was discussing with you was the PN-2 public comments from CCW that you all already have. If you can identify some other document you think I was using, please let me know.

Thank you, and enjoy the long holiday weekend,
JJP

Jennifer J. Pruett
Manager, Pollution Prevention Section
Harold Runnels Bldg.
1190 St. Francis Dr.
P.O. Box 5469
Santa Fe, NM 87502-5469
505-827-0652

From: Beers, Bob [mailto:bbeers@lanl.gov]
Sent: Thursday, August 28, 2014 2:21 PM
To: Pruett, Jennifer, NMENV
Cc: Huddleson, Steven, NMENV; Hower, Jennifer, NMENV; Saladen, Michael Thomas; Hall, John, NMENV; Schoeppner, Jerry, NMENV; Turner, Gene E; Cummings, Lisa K; McMichael, Susan Lynn; Grieggs, Tony
Subject: RE: Progress on Re-draft of DP-1132 (LANL RLWTF)

Hi Jennifer,

First off, Mike and I would like to thank you and your staff for all the support you've provided DOE/LANS on our discharge permits and applications. We recognize that that we're not an easy facility to regulate!

We also acknowledge the challenges the bureau has faced of late but are none-the-less disappointed with the continuing delays in achieving our mutual goal of a permit for the RLWTF. As you know, without a permit DOE/LANS cannot begin using the new Solar Evaporation Tank (SET) nor can the RLWTF continue use of the WMRM tanks without interruption. Further, until a discharge permit is issued the path forward for permitting the planned Low-Level Waste (LLW) Facility contains

uncertainties that concern DOE/NNSA.

Setting the above issues aside, DOE/LANS request that you proceed with scheduling the settlement meeting with CCW, LANL and NMED for mid-October with th hope that the parties may reach an agreement and that NMED may issue a revised draft permit.

And finally, at the August 12th meeting you read from a document containing a list of proposed permit requirements from CCW. DOE/LANS would appreciate a copy so that we can be prepared to address these issues and facilitate their successful resolution at the October settlement meeting.

We look forward to working with you in the coming months.

Sincerely,

Bob Beers
Los Alamos National Security, LLC
505-667-7969

From: Pruett, Jennifer, NMENV [mailto:Jennifer.Pruett@state.nm.us]
Sent: Tuesday, August 26, 2014 12:41 PM
To: Beers, Bob; Saladen, Michael Thomas; Hall, John, NMENV; Huddleson, Steven, NMENV; Hower, Jennifer, NMENV; Schoeppner, Jerry, NMENV
Subject: Progress on Re-draft of DP-1132 (LANL RLWTF)

Greetings Mike and Bob,

I had hoped to have another draft permit for this facility last week. However, with the departure of Erika Schwender from NMED, several additional matters have landed on my plate and re-arranged my priorities. Luckily, this has coincided with the arrival of Mr. Huddleson and his project management and expertise into the PPS. As you know, he has already toured and visited several LANL locations, including the RLWTF, and is getting up to speed on this matter very quickly. I will have a briefing with him and John Hall tomorrow about the draft permit, what I've done, and what we need, so he can take over. This should result in a greater likelihood of a completed draft sooner rather than later.

Realistically, I do not think we will be able to have a revised permit before late September, which would put our joint meeting with CCW, LANL and NMED in mid-October. Would you please give me your feedback on that timing? I apologize yet again for my personal and program's delay on this matter, but with our high vacancy rate and multiple, changing priorities, we are in a very tough situation trying to cover a whole lot of bases right now.

Thank you for your continued patience, and your cooperative work with us. We look forward to hearing from you about the revised permitting schedule.

Thank you,

JJP

Jennifer J. Pruett
Manager, Pollution Prevention Section
Harold Runnels Bldg.
1190 St. Francis Dr.
P.O. Box 5469
Santa Fe, NM 87502-5469
505-827-0652

: 12730

12731

GROUND WATER
SEP 12 2014
BUREAU

Environmental Protection Division
Environmental Compliance Programs (ENV-CP)
PO Box 1663, K490
Los Alamos, New Mexico 87545
(505) 667-0666

National Nuclear Security Administration
Los Alamos Field Office, A316
3747 West Jemez Road
Los Alamos, New Mexico, 87545
(505) 667-5794/Fax (505) 667-5948

Date: SEP 11 2014
Symbol: ENV-DO-14-0247
LAUR: 14-26444
Locates Action No.: N/A

Mr. Jerry Schoeppner, Chief
Ground Water Quality Bureau
New Mexico Environment Department
Harold Runnels Building, Room N2261
1190 St. Francis Drive
P.O. Box 26110
Santa Fe, NM 87502

Dear Mr. Schoeppner:

Subject: **CORRECTED ENV-DO-14-0229, Request for Additional Information, Discharge Permit Application DP-1132, Radioactive Liquid Waste Treatment Facility**

On August 12, 2014, the New Mexico Environment Department (NMED), Ground Water Quality Bureau, met with the U.S. Department of Energy and Los Alamos National Security, LLC (DOE/LANS) to discuss draft Discharge Permit DP-1132 for the Technical Area (TA)-50 Radioactive Liquid Waste Treatment Facility (RLWTF). At the above-referenced meeting the NMED asked DOE/LANS to provide additional information on Solid Waste Management Units (SWMUs) and Areas of Concern (AOCs) at the RLWTF. The following enclosures provide the information requested:

- ✓ **Enclosure 1** contains a table listing units associated with the TA-50 RLWTF and their assigned SWMU or AOC number, if applicable. All units at the TA-50 RLWTF, including National Pollutant Discharge Elimination System (NPDES) Outfall No. 051, have been characterized as a SWMU or AOC, and are therefore subject to regulation under the Compliance Order on Consent (Consent Order, 2005), with the exception of the following four units:

    - TA-50-257 Mechanical Evaporator System (MES)
    - TA-52 Solar Evaporative Tank System (SET)
    - TA-50-250 Waste Mitigation and Risk Management Tanks (WMRM)
    - TA-50-248 Bottoms Disposal Tanks (previously omitted)

As discussed at the August 12th meeting, the NMED Hazardous Waste Bureau has approved (through approval of the Upper Mortandad Canyon Aggregate Area Investigation Report) delaying completion of Consent Order investigation activities at SWMUs 50-001(a), 50-002(a), and 50-002(b), and 50-002(c) and AOC 50-001(b) until decommissioning of the RLWTF.

- ✓ **Enclosure 2** contains an excerpt (only those pages relevant to the SWMUs and AOCs at the TA-50 RLWTF) from Los Alamos National Laboratory's *Investigation Report for Upper Mortandad Canyon Aggregate Area, Revision 1* (EP2010-0149, LA-UR-10-2046, April 2010).

Please contact Robert S. Beers by telephone at (505) 667-7969 or by email at bbeers@lanl.gov if you have questions regarding this information.

Sincerely,

Alison M. Dorries
Division Leader
Environmental Protection Division
Los Alamos National Security LLC

Sincerely,

Gene E. Turner
Environmental Permitting Manager
Environmental Projects Office
Los Alamos Field Office
U.S. Department of Energy

AMD:GET:RSB/lm

Enclosures:

1. Corrected Table of TA-50 RLWTF units and their assigned SWMU or AOC number
2. Excerpt from *Investigation Report for Upper Mortandad Canyon Aggregate Area, Revision 1* (EP2010-0149, LA-UR-10-2046, April 2010)

Cy: James Hogan, NMED/SWQB, Santa Fe, NM, (E-File)
John E. Kieling, NMED/HWB, Santa Fe, NM, (E-File)
Stephen M. Yanicak, NMED/DOE/OB, (E-File)
Hai Shen, NA-LA, (E-File)
Gene E. Turner, NA-LA, (E-File)
Kirsten Laskey, NA-LA, (E-File)
Carl A. Beard, PADOPS, (E-File to aosburn@lanl.gov)
Michael T. Brandt, ADESH, (E-File)
Raeanna Sharp-Geiger, ADESH, (E-File)
Alison M. Dorries, ENV-DO, (E-File)
Robert C. Mason, TA55-DO, (E-File)
William H. Schwettmann, IPM, (E-File)
Leslie K. Sonnenberg, TA-55-RLW, (E-File)
John C. Del Signore, TA-55-RLW, (E-File)
Randal S. Johnson, DSESH-TA55, (E-File)

Cy (continued):
Stephen G. Cossey, DSESH-TA55, (E-File)
Michael T. Saladen, ENV-CP, (E-File)
Robert S. Beers, ENV-CP, (E-File)
LASOmailbox@nnsa.doe.gov, (E-File)
locatesteam@lanl.gov, (E-File)
env-correspondence@lanl.gov

GROUND WATER
SEP 12 2014
BUREAU

CORRECTED ENCLOSURE 1

Table of TA-50 RLWTF units and their assigned SWMU or AOC number

ENV-DO-14-0247

LAUR-14-26444

Date: SEP 11 2014

: 12735

Table 1. RLWTF Unit Operations, Location, and SWMU or AOC Number, if applicable.

Unit Operation	Location	SWMU/AOC No.
Main Treatment:		
M1 Collection System-piping & vaults	TA-03, 35, 48, 50, 55, 59	AOC 50-001(b)
M2 Influent Storage WMRM Tanks (2)	50-250	NA
M3 Emergency Influent Storage (4)	50-250	NA
M4 Reaction Tanks	50-01	SWMU 50-001(a)
M5 Microfilter	50-01	SWMU 50-001(a)
M6 Pressure Filters	50-01	SWMU 50-001(a)
M7 Perchlorate Ion Exchange	50-01	SWMU 50-001(a)
M8 Primary Reverse Osmosis	50-01	SWMU 50-001(a)
M9 Cu-Zn Ion Exchange	50-01	SWMU 50-001(a)
M10 Effluent Storage	50-01	SWMU 50-001(a)
M11 Effluent Evaporator	50-257	NA
M11 Solar Evaporation	TA-52	NA
M11 NPDES Outfall #051	Mortandad Canyon	SWMU 50-006(d)
Transuranic:		
T1 Collection System-piping	TA-50, TA-55	AOC 50-001(b)
T2 Influent Storage	50-66	SWMUs 50-002(b,c)
T3 Treatment	50-01	SWMU 50-001(a)
T4 Drum Tumbling	50-01	SWMU 50-001(a)
T5 Effluent Storage	50-01	SWMU 50-001(a)
Secondary Treatment:		
S1 Secondary Reverse Osmosis	50-01	SWMU 50-001(a)
S2 Rotary Vacuum Filter	50-01	SWMU 50-001(a)
S3 Bottoms Disposal	50-248	NA
Vessels Scheduled for Retirement:		
75K tank	50-02	SWMU 50-002(a)
WM2-North	50-02	SWMU 50-002(a)
WM2-South	50-02	SWMU 50-002(a)
Clarifier #1	50-01	SWMU 50-001(a)
Clarifier #2	50-01	SWMU 50-001(a)
Gravity Filter	50-01	SWMU 50-001(a)
100K Tank	50-90	SWMU 50-001(a)

: 12736

ENCLOSURE 2

Excerpt from *Investigation Report for Upper Mortandad Canyon Aggregate Area, Revision 1*
(EP2010-0149, LA-UR-10-2046, April 2010)

ENV-DO-14-0247

LAUR-14-26444

Date: SEP 1 1 2014

: 12737

LA-UR-10-2046
April 2010
EP2010-0149

Investigation Report for Upper Mortandad Canyon Aggregate Area, Revision 1

Los Alamos
NATIONAL LABORATORY
EST. 1943

: 12738

6.0 TA-50 BACKGROUND AND FIELD-INVESTIGATION RESULTS

6.1 Background of TA-50

TA-50 is located immediately northeast of the intersection of Pajarito Road and Pecos Drive and occupies an area of approximately 21 acres: 11.8 acres are associated with MDA C, and 8.7 acres are associated with the RLWTF. MDA C was used from 1948 until it was decommissioned in 1974 and consists of pits and shafts that received radioactive and hazardous wastes. Treatment facilities include the RLWTF and associated waste-transfer and storage systems, equipment-decontamination areas, and solid-waste volume-reduction facilities. Plate 6.1-1 shows the site features of TA-50.

Seven AOCs and 12 SWMUs located in TA-50 are addressed in this investigation report.

- SWMU 50-001(a) is the TA-50 RLWTF (building 50-1).
- AOC 50-001(b) is an active drainline system transferring liquid waste to the RLWTF.
- SWMU 50-002(a) is an underground reinforced concrete vault (building 50-2) that houses equipment, tanks, and transfer lines, all of which are associated with the RLWTF.
- Consolidated Unit 50-002(b)-00 consists of SWMUs 50-002(b and c).
    - ❖ SWMUs 50-002(b) and 50-002(c) are the waste tanks (structures 50-67 and 50-68, respectively) and associated inlet and outlet lines housed in an underground reinforced-concrete vault (structure 50-66) at the RLWTF.
- AOC 50-002(d) is a decommissioned aboveground 5000-gal. stainless-steel tank (structure 50-5) at the RLWTF.
- AOC 50-003(a) is a former RCRA interim status unit located in room 59 of building 50-1 to store containers of solid, cemented mixed-transuranic (TRU) sludge resulting from waste treatment activities.
- Consolidated Unit 50-004(a)-00 consists of SWMUs 50-004(a, b, and c).
    - ❖ SWMU 50-004(a) is the location of former underground radioactive liquid waste and industrial waste lines.
    - ❖ SWMU 50-004(b) is the location of a former underground vault (structure 50-3) that housed three stainless-steel lined concrete storage tanks.
    - ❖ SWMU 50-004(c) consists of 13 industrial waste lines and 3 associated manholes that discharged to the underground tank vault [SWMU 50-004(b)].
- SWMU 50-006(a) is the site of two accidental operational releases from the sump.
- SWMU 50-006(c) is the surface soil contamination at TA-50 resulting from the deposition of radioactive contaminants from historical stack emissions at TA-50.
- SWMU 50-006(d) is a TA-50 drainline (structure 50-64) and associated NPDES-permitted Outfall 051 in Mortandad Canyon for treated wastewater from the RLWTF.
- AOC 50-007 is the former incinerator complex in building 50-37.
- AOC 50-008 is formerly a volume reduction facility, currently the waste characterization, reduction, and repackaging facility (WCRRF), in building 50-69.
- SWMU 50-009 is MDA C.

- AOC 50-010 is the former vehicle decontamination bay located in room 34B of the RLWTF, building 50-1.
- SWMU 50-011(a) is the former septic system at the south end of the RLWTF.
- AOC 50-011(b) are the two sanitary wastewater lift stations (structures 50-91 and 50-92) and associated piping.

6.1.1 Operational History

The TA-50 RLWTF was built in 1963 to meet the need for expanded treatment capability and to locate a treatment facility nearer the TAs generating the waste. This plant treats low-level wastewater from various areas of the Laboratory.

The incinerator complex (building 50-37), built in 1975, and the volume-reduction facility (building 50-69), built in 1983, were prototype facilities for developing and testing improved methods of handling and treating certain types of radioactive waste.

MDA C is a decommissioned material disposal area established to replace MDA B at TA-21 for disposal of Laboratory-derived waste. MDA C operated from May 1948 to April 1974 but received waste only intermittently from 1968 until it was decommissioned in 1974.

6.1.2 Summary of Releases

Process wastes were generated at TA-50 by the radioactive and nonradioactive liquid and solid waste treatment facilities. Liquid wastes were monitored and then released to Mortandad Canyon. Currently, most of the liquid wastes from the volume reduction and incinerator facilities are transferred by drainline to the liquid waste treatment plant, where they are treated as radioactive industrial waste. Liquid TRU wastes are transferred to the special TRU-treatment facilities in the liquid waste treatment plant.

Stack air from hoods, off-gas, and/or ventilation systems in the liquid treatment, volume reductions, and incinerator facilities was monitored and filtered to remove particulates and contaminants.

Contaminants may have been released to surface soil during the period when wastes were actively disposed of at MDA C. Fires in the disposal pits at MDA C have been recorded (LANL 1992, 007672) and may have released contamination to surface soil and air. Gas or vapor-phase contaminants may diffuse from waste and mix with air in the shafts or pits, then diffuse through the air-filled pores in the subsurface rock.

6.1.3 Current Site Usage and Status

TA-50 is an active site and is almost completely developed, with the exception of the 1.8 acres that comprises MDA C. Roads and large paved parking areas surround the buildings and structures.

6.2 SWMU 50-001(a)—Wastewater Treatment Facility

6.2.1 Site Description and Operational History

SWMU 50-001(a) consists of the TA-50 RLWTF (building 50-1) (Figure 6.2-1). This treatment plant treats LLW water from various parts of the Laboratory. The TA-50 RLWTF has operated continuously since its construction in 1963. The TA-50 RLWTF primarily removes TRU elements using neutralization, flocculation and clarification, pH control, ion-exchange filtration, and ultrafiltration, and reverse-osmosis

processes. Treated effluent is monitored and discharged to an NPDES-permitted outfall [SWMU 50-006(d)] in Mortandad Canyon. Associated with the TA-50 RLWTF is a system of drainlines and tanks that transfers, treats, and temporarily stores the liquid waste and treated sludge. The drainlines and tanks are not part of SWMU 50-001(a). The drainlines are SWMU 50-001(b), and the tanks are SWMU 50-002(a) and Consolidated Unit 50-002(b)-00.

In July 1990, core samples collected from boreholes drilled through the floor of building 50-1, around the pH-adjustment tank (also known as the grit chamber), indicated the inlet line to the pH-adjustment tank had leaked. Therefore, influent wastes were rerouted to building 50-2 (LANL 1992, 007672).

6.2.2 Relationship to Other SWMUs and AOCs

SWMU 50-001(a) is the TA-50 RLWTF that treats LLW water from various parts of the Laboratory. Associated with the TA-50 RLWTF is a system of drainlines and tanks [SWMUs 50-001(b) and 50-002(a) and Consolidated Unit 50-002(b)-00] that transfers, treats, and temporarily stores liquid waste and treated sludge. Consolidated Unit 50-004(a)-00 is the former underground RLW and industrial waste systems that connected to RLWTF (only one component, waste line 56, still exists). Treated effluent at RLWTF is monitored and discharged to an NPDES-permitted outfall [SWMU 50-006(d)] in Mortandad Canyon. SWMU 50-011(a) is a former septic system at the south end of RLWTF. Also, AOCs 50-002(d), 50-003(a), and 50-010 are located within the RLWTF.

6.2.3 Summary of Previous Investigations for SWMU 50-001(a)

No previous investigation activities have been conducted at SWMU 50-001(a).

6.2.4 Delayed Site Investigation Rationale

SWMU 50-001(a) consists of an active RLWTF that is also a Hazard Category 2 Nuclear Facility. The investigation work plan (LANL 2008, 100750) proposed delaying site characterization and investigation until future D&D of the RLWTF. NMED approved this proposal (NMED 2008, 101110).

6.3 AOC 50-001(b)—Waste Lines and Manholes

6.3.1 Site Description and Operational History

AOC 50-001(b) is the active underground drainline system through which RLW is collected and transferred throughout TA-50 facilities, including the RLWTF (building 50-1) (Figure 6.3-1). The collection system was installed in 1982 and typically consists of an 8-in.-diameter high-density polyethylene (HDPE) pipe (to protect against corrosion) within a 12-in.-diameter HDPE pipe that provides double containment and a leak-detection system. Underground vaults and manholes were installed at piping junctions and other strategic locations. At each vault/manhole, the outer pipe on the RLW line terminates at the structure wall to allow the annular space to be monitored for the detection of leaks from the inner piping (Appendix C, C-10a through C-10d). Each vault/manhole is equipped with transmitting detectors that will signal an alarm to the RLWTF monitoring stations if any liquid is detected in the annulus between the inner and outer pipes. The RLW lines and vaults/manholes are sloped to provide gravity flow so any liquid from a leak in the interior line would flow within the containment pipe to the downstream vault/manhole where it would be detected. Each vault/manhole provides secondary containment for piping running through the structure and is equipped with a sump and a liquid sensor that will transmit an alarm to the RLWTF monitoring stations if any liquid is detected. The interior of each vault/manhole is coated to prevent infiltration of any contaminated liquid waste. All penetrations to each vault/manholes are sealed to

prevent the infiltration of surface water (Appendix C, C-10a through C-10d). The leak detection system on the RLW collection system is tested routinely, and the vaults are inspected monthly. The leak detection system has never indicated leakage of waste from the inner pipe into the outer containment pipe.

Vault/manhole 50-072 is the central collection area at the TA-50 RLWTF for most incoming RLW. Three RLW lines feed into vault 50-072:

- In 1982, a major line connecting several TAs to this vault was constructed to replace an old RLW line [Consolidated Unit 50-004(a)-00]. The new RLW line consists of a double polyethylene pipe that enters structure 50-72 from the north side of Pecos Drive (LANL 1992, 007672).
- Another RLW line tied into structure 50-72, completed in 1982, transports RLW from structure 50-73 (a vault), which receives wastes from building 50-69 (a volume reduction facility, AOC 50-008) and building 50-37 (the incinerator complex, AOC 50-007). This line is a 6-in. polyethylene line within a 10-in. polyethylene line.
- A third line, also installed in 1982, transports RLW from TA-55 to structure 50-72 through two manholes (structures 50-16 and 50-78). The line consists of an inner stainless-steel pipe within a polyvinyl chloride (PVC) pipe.

A single drainline carried all influent from structure 50-72 into the grit tank at building 50-1 until a leak around the grit tank was detected in 1990 (LANL 1992, 007672). The line now bypasses the grit chamber and passes through the neutralization chamber before it connects to the building 50-2 tank vault [SWMU 50-002(a)]. This portion of the line consists of an inner 8-in. schedule 40 stainless-steel pipe and an outer 10-in. schedule 10 stainless-steel pipe. Structure 50-7, another manhole of the influent RLW collection system, is connected to the waste line from the tank truck unloading station (structure 50-77). Structure 50-7 has been out of service since the early 1990s (LANL 1992, 007672).

Four other RLW lines run from TA-55 to building 50-1 through structure 50-106 to tanks in an underground vault (structure 50-66). Three of the lines are 1.5-in. stainless-steel lines, each located within an outer 3-in. PVC pipe. Two of the three lines carry caustic and acid TRU wastes with high radioactivity. The third line is a spare that has never been used. The fourth line, which is for non-TRU industrial waste, is a 2-in.-diameter stainless-steel line within an outer 3-in. PVC. The lines operate by gravity flow, and the end of each is monitored continuously for leaks at TA-55 and at two acid pits (structures 50-57 and 50-66) by a drip-tray and conductivity probe system wired to a computer for continuous readout. The three nonindustrial waste lines were replaced in 1994. The new lines were tied into the existing lines in 2005 and were put into service in 2008. According to the 1990 SWMU report, there was some concern about contamination from the waste lines carrying TA-55 effluent because the original vacuum seals reportedly lost their integrity (LANL 1990, 007513). However, the drip pans at TA-55 and TA-50 have never collected fluid that would have indicated a release from the inner waste lines. The area where the lines enter building 50-1 and the area west and north of the RLW tank farm (building 50-2) were sampled in August 1990; analytical results showed no radionuclides detected above BVs (LANL 1992, 007672).

6.3.2 Relationship to Other SWMUs and AOCs

AOC 50-001(b) is an active underground drainline system transferring liquid waste to the RLWTF [SWMU 50-001(a)]. One of the Consolidated Unit 50-004(a)-00 RLW lines was connected to a manhole of AOC 50-001(b) until 1982 when the line was removed and replaced with the new double-walled RLW line. Another waste line that transports low-level radioactive liquids from AOCs 50-007 and 50-008 also connects to the manhole of AOC 50-001(b). A drainline from the manhole of AOC 50-001(b) eventually connects to SWMU 50-002(a).

6.3.3 Summary of Previous Investigations for AOC 50-001(b)

During tie-in activities for the new RLW lines at TA-55 in 2005, six samples were collected from a depth of 0 to 0.5 ft beneath the bottom of the four existing AOC 50-001(b) RLW lines (13.5 ft to 14 ft bgs) in an excavation between buildings 55-4 and 55-2 (sample IDs MD50-05-60732, MD50-05-60733, MD50-05-60734, MD50-05-60735, MD50-05-60738, and MD50-05-60739) (Appendix C, C-10e through C-10l). The samples were field screened for radioactivity and submitted to the Laboratory's SMO for analysis of VOCs, SVOCs, perchlorate, metals, cyanide, gamma spectroscopy, americium-241, isotopic plutonium, isotopic uranium, tritium, strontium-90, and nitrates. Field screening showed no elevated radioactivity above background. No radionuclides were detected above BVs. Methylene chloride was detected in one sample. Chromium and zinc were each detected in one sample above BVs.

6.3.4 Delayed Site Investigation Rationale

Delayed investigation is proposed for AOC 50-001(b) because characterizing this site, which is located adjacent to an active nuclear facility, is not feasible. Site access for equipment needed for subsurface investigations is extremely limited. Available information, including the design features of the site, indicates a very low likelihood of past releases to the environment. Even if a release had occurred, any residual contamination would be located beneath buildings or paved areas, effectively preventing exposure to receptors and preventing contact with infiltrating precipitation that could cause migration of contaminants.

The NMED approval with modifications letter (NMED 2008, 101110) required pressure testing of the waste lines associated with AOC 50-001(b). The waste collection lines and manholes were designed as a gravity flow system and were not designed to be pressure tested. Rather than using pressure testing as a means of integrity assessment, the system utilizes a double-containment leak-detection system. As described in section 6.3.1, all the drainline segments are double-containment lines, and the underground vaults provide double containment at all joints and connections. The double-containment design allows for continuous monitoring for leaks from the inner pipes that transport the wastewater. Leak-detection monitoring has been performed since the system was placed in service in 1982. No releases from the waste conveyance system to the environment have been detected, and the likelihood of undetected releases is very remote.

The leak detection system on the RLW collection system is routinely tested, and the vaults are inspected on a monthly basis. To date, all instances of detection of liquid within the containment vaults have been determined to have been caused by infiltration of stormwater rather than leaks from the pipes. The collection system is 27 yr old, and the seals on vault/manhole penetrations to prevent the infiltration of stormwater are degrading. Inspections conducted in 2007 and 2008 indicate stormwater is consistently infiltrating many of the manholes/vaults. Any water discovered in a manhole/vault is sampled and analyzed for gross-alpha radioactivity. To date, results have confirmed the source of water in the vaults/manholes is from infiltration of stormwater and not from leaks in the RLW lines (Appendix C, C-10m and C-10n). The Laboratory is in the process of implementing upgrades to the vaults, including replacing the seals. Three vaults were scheduled to be upgraded and sealed in fiscal year (FY) 2010. One vault has been completed in FY2010, and the other two vaults are scheduled to be completed by the end of July 2010. Three additional vaults will be upgraded and sealed in FY2011. The system will continue to be maintained and monitored for as long as it is operational. For these reasons, it is proposed that site characterization and investigation be delayed until future D&D of the TA-50 facility has been completed.

6.4 SWMU 50-002(a)—Underground Tanks

6.4.1 Site Description and Operational History

SWMU 50-002(a) consists of an underground, reinforced-concrete vault (building 50-2) (Figure 6.2-1) that houses an equipment room, six flow-through process tanks, and several waste-transfer lines, all of which are associated with the TA-50 RLWTF (building 50-1) (reference engineering drawings). The floor of the vault is 17 ft below ground. The holding tanks located within the vault (building 50-2) include two influent tanks (25,000 gal. and 75,000 gal.) and two 25,000-gal. tanks used to store treated waste for reuse. The fifth tank (capacity 25,000 gal.) flows into the 75,000-gal. tank and was previously used to store waste during D&D activities; this tank was equipped with a new liner and is available for standby use. The sixth tank (capacity 30,000 gal.) originally functioned as a holding tank for low-level sludge. In June 2001, the 30,000-gal. tank was drained, rinsed, and taken off-line by closing its valve; currently, this tank is available for standby use (Appendix C, C-11a through C-11g). The tanks are part of the building foundation with concrete tops and are not designed to be pressure tested. Each tank is equipped with level indicators tied into the RLWTF monitoring and alarm system that is monitored 24 hr/d.

Wastes are transported to the vault (building 50-2) through a system of transfer lines. Waste transfer lines include six cast-iron lines (including lines 55 and 67) connecting the RLWTF (building 50-1) to the equipment room in the vault (building 50-2); four steel lines added in 1984 to connect room 61 to the equipment room in building 50-2; five cast-iron lines from drains in building 50-1 and one cast-iron line from a sink in the former vehicle-decontamination bay in building 50-1 to the former D&D tank in building 50-2; an influent line connecting building 50-2 to a 100,000-gal. holding tank (structure 50-90); and an effluent line connecting the holding tank to one of the 25,000-gal. influent tanks in the building 50-2 vault. The waste transfer lines are equipped with flow-monitoring detectors and are not designed to be pressure tested.

In July and September 1974, two separate, unintentional operational releases occurred from the overflow of a sump in building 50-2. Both releases caused untreated wastewater to be discharged to waste lines 55 and 67 (the waste lines for treated effluent) and into the outfall area at the head of Ten Site Canyon [SWMU 50-006(a)]. In February 1975, waste line 67 was plugged at its outfall. In 1990, the integrity of the building 50-2 concrete walls and the pipelines tied from the tank farm to building 50-1 were checked, and no leaks were found (LANL 1992, 007672). The area west and north of the RLW tank farm (building 50-2) was sampled by IT Corporation in August 1990; analytical results showed no radionuclides detected above BVs (LANL 1992, 007672). No drainlines other than waste line 67 have been abandoned and/or plugged, and all tanks in vault building 50-2 remain active.

6.4.2 Relationship to Other SWMUs and AOCs

All the components of SWMU 50-002(a) are associated with RLWTF [SWMU 50-001(a)]. In July and September 1974, two separate unintentional operational releases occurred from the overflow of a sump in SWMU 50-002(a). Both releases caused untreated wastewater to be discharged to through waste lines into the outfall area at the head of Ten Site Canyon [SWMU 50-006(a)].

6.4.3 Summary of Previous Investigations for SWMU 50-002(a)

During RFI activities implemented in 1995, one near-surface sample was collected from a depth of 0.33 to 0.66 ft bgs at SWMU 50-002(a); no additional RFI activities have been conducted at this SWMU. The sample was analyzed for metals, uranium, PCBs/pesticides, SVOCs, VOCs, gamma spectroscopy,

tritium, isotopic plutonium, isotopic uranium, and strontium-90. Chromium and cobalt were detected above BVs and tritium was detected above the BV.

6.4.4 Delayed Site Investigation Rationale

Delayed investigation is proposed for SWMU 50-002(a) because characterizing this site, which is located inside an active nuclear facility, is not feasible. Available information, including the design features of the site, indicates a very low likelihood of past releases to the environment. Even if a release had occurred, any residual contamination would be located beneath the floor of building 50-2, effectively preventing exposure to receptors and preventing contact with infiltrating precipitation that could cause migration of contaminants.

The NMED approval with modifications letter (NMED 2008, 101110) required pressure testing of the waste tanks and lines associated with SWMU 50-002(a). The waste collection and transfer system inside building 50-2 is not designed to be pressure tested and relies on other means of leak detection. As described in section 6.4.1, each tank in building 50-2 is equipped with a level indicator tied into the RLWTF monitoring and alarm system, which is monitored 24 hr/d, and the waste transfer lines are equipped with flow monitors. No releases from the tanks or waste transfer lines to the environment have been detected, and the likelihood of undetected releases is very remote.

The Laboratory is in the process of designing a new RLWTF at TA-50 that will include new influent and effluent storage tanks and new waste-transfer lines. The tanks in vault 50-002 and the waste transfer lines will continue to be maintained and monitored for as long as it is operational. For these reasons, it is proposed that site characterization and investigation be delayed until future D&D of vault 50-002 has been completed.

6.5 Consolidated Unit 50-002(b)-00—Vaulted Underground Tanks for TA-55 Waste

6.5.1 Site Description and Operational History

Consolidated Unit 50-002(b)-00 consists of SWMUs 50-002(b and c), two waste tanks (structures 50-67 and 50-68) and their associated inlet and outlet lines housed in an underground reinforced-concrete tank vault (structure 50-66) at the TA-50 RLWTF [building 50-1, SWMU 50-001(a)] (Figure 6.3-1). The concrete vault measures 18 ft × 16 ft × 14 ft deep and is located about 30 ft from the southwest corner of building 50-1. The two waste tanks and the tank vault were constructed exclusively to store radioactive caustic waste (structure 50-67) and acidic waste (structure 50-68) from TA-55, where TRU wastes are generated. TRU wastes are processed separately from other wastes. The inlet lines consist of four stainless-steel pipes encased in PVC. One line is a capped backup. The second line carries radioactive acid waste to the acid waste tank. The third line carries radioactive caustic waste to the caustic tank. Wastes are transferred from the tanks through two double stainless-steel lines to room 60, building 50-1. The operation is monitored for criticality hazards, and necessary adjustments are made before treatment. The fourth line carries RLW to a manhole (structure 50-72) [AOC 50-001(b)]. No documented releases are associated with Consolidated Unit 50-002(b)-00 (LANL 1992, 007672).

6.5.2 Relationship to Other SWMUs and AOCs

All components of Consolidated Unit 50-002(b)-00 are associated with RLWTF [SWMU 50-001(a)].

6.5.3 Summary of Previous Investigations for Consolidated Unit 50-002(b)-00

No previous investigation activities have been conducted at Consolidated Unit 50-002(b)-00.

6.5.4 Delayed Site Investigation Rationale

Consolidated Unit 50-002(b)-00 is an active system. The investigation work plan (LANL 2008, 100750) proposed that site characterization and investigation be delayed until the tanks are removed. NMED approved this proposal (NMED 2008, 101110).

6.6 AOC 50-002(d)—Aboveground Storage Tank

6.6.1 Site Description and Operational History

AOC 50-002(d) is a decommissioned aboveground 5000-gal. stainless-steel tank (structure 50-5) located at building 50-1 (the RLWTF) (Figure 6.6-1). The tank is outside and next to the north wall of room 63D. Before it was decommissioned, the tank was used to store product (nitric acid). The storage tank was part of the ion-exchange column system at the RLWTF (building 50-1). The ion-exchange system was designed to remove any radioisotopes not previously removed by the clariflocculator system at the RLWTF. Because the clariflocculator system was so successful in removing radioisotopes from wastewater to levels consistently below DOE limits at the time, the ion-exchange column was rarely used, and the tank was consequently never filled to capacity. In late 1964, a new tank (structure 50-5) replaced the original nitric acid tank after the original rubber-lined carbon steel tank reportedly leaked; however, there are no records documenting a release from the former tank. The new tank is supported on concrete saddles that extend 5 ft bgs. A concrete sump filled with limestone chips (structure 50-12) was installed beneath the new tank. The tank was vented to the sump to neutralize any nitric acid vapors emitted when the tank was filled. In accordance with the Laboratory's stormwater pollution prevention plan (SWPPP), concrete containment walls and a concrete slab were installed around the tank (Appendix C, C-12a). In 1996, the tank was decommissioned (emptied, triple rinsed, and all piping and valves disconnected from the building and plugged) (LANL 2000, 067470.24). Since the tank has been decommissioned it, cannot be pressure tested; however, visual inspection reveals the tank remains in good condition.

6.6.2 Relationship to Other SWMUs and AOCs

AOC 50-002(d) is next to the north wall of room 63D of building 50-1. AOC 50-003(a) is located in room 59 of building 50-1, which is immediately east of AOC 50-002(d).

6.6.3 Summary of Previous Investigations for AOC 50-002(d)

No previous investigation activities have been conducted at AOC 50-002(d).

6.6.4 Site Contamination

Sampling of the sump was performed beneath the storage tank, and the results of the investigation are described below. Investigation of the soil beneath the tank and sump will be delayed until the tank is removed (see section 6.6.7).

6.6.4.1 Swipe Sampling

Four swipe samples were collected from the concrete sump beneath the storage tank. The samples were analyzed for, TAL metals, PCBs, SVOCs, gamma-emitting radionuclides, isotopic plutonium, and isotopic uranium. Table 6.6-1 provides the sampling locations and analyses requested. Figure 6.6-1 shows the sampling locations.

6.6.4.2 Field-Screening Results

Because only swipe samples were collected at AOC 50-002(d), field screening was not performed.

6.6.4.3 Swipe Sampling Analytical Results

Inorganic Chemicals

Table 6.6-2 lists the inorganic chemicals detected on swipe samples from AOC 50-002(d). Discussion of inorganic chemicals on the swipe samples is presented in Appendix I, section I-6.5.1.

The inorganic chemicals detected on swipe samples at AOC 50-002(d) are aluminum, antimony, arsenic, barium, beryllium, cadmium, calcium, chromium, cobalt, iron, lead, magnesium, manganese, nickel, potassium, sodium, vanadium, and zinc. Because the tank was used only to store nitric acid, the inorganic chemicals detected are unrelated to AOC 50-002(d).

The sampling locations and detected concentrations of inorganic chemicals are shown in Figure 6.6-2.

Organic Chemicals

Table 6.6-3 lists the organic chemicals detected on swipe samples from AOC 50-002(d). Discussion of organic chemicals detected on the swipe samples is presented in Appendix I, section I-6.5.2.

The organic chemicals detected on swipe samples at AOC 50-002(d) are acenaphthene; anthracene; Aroclor-1260; benzo(a)anthracene; benzo(a)pyrene; benzo(b)fluoranthene; benzo(g,h,i)perylene; chrysene; fluoranthene; fluorene; indeno(1,2,3-cd)pyrene; 2-methylnaphthalene; naphthalene; phenanthrene; and pyrene. Because the tank was used only to store nitric acid, the organic chemicals detected are unrelated to AOC 50-002(d).

Sampling locations and detected concentrations of organic chemicals are shown in Figure 6.6-3.

Radionuclides

No radionuclides were detected on the swipe samples collected at AOC 50-002(d).

6.6.4.4 Nature and Extent of Contamination

The nature and extent of contamination at AOC 50-002(d) are discussed in Appendix I, section I-6.5.5.

Because the tank was used only to store nitric acid, the COPCs identified are unrelated to AOC 50-002(d). Further investigation is delayed (see section 6.6.7).

6.6.5 Summary of Human Health Risk Screening

A human health risk-screening assessment is not possible using the available data (swipe samples only) for AOC 50-002(d).

6.6.6 Summary of Ecological Risk Screening

An ecological risk-screening assessment is not possible using the available data (swipe samples only) for AOC 50-002(d).

6.6.7 Delayed Site Investigation Rationale

Delayed investigation is proposed for AOC 50-002(d) because characterizing this site, which is located next to an active nuclear facility, is not feasible. Site access for equipment needed for subsurface investigations is extremely limited. Available information, including the design features of the site, indicates a very low likelihood of past releases to the environment. Even if a release had occurred, any residual contamination would be located beneath buildings or paved areas, effectively preventing exposure to receptors and preventing contact with infiltrating precipitation that could cause migration of contaminants.

The NMED approval with modifications letter (NMED 2008, 101110) required pressure testing of the tank. The tank was not designed to be pressure tested, and alternate means of leak detection (e.g., inspections) were available. There is no available documentation to confirm the original 1964 nitric acid tank leaked. An undetected leak of nitric acid is unlikely because of safety concerns for the personnel. Even if minor releases had occurred, once the former tank was removed, excavation of soil to install of two 5-ft-deep concrete saddles for the new tank resulted in the removal of soil potentially contaminated from historical releases of nitric acid. Additionally, carbonates found in native basic soils would aid in neutralization of any released nitric acid. Residual nitrate would likely have biodegraded in the 44 yr since the first tank was removed. For these reasons, it is proposed that site characterization and investigation be delayed until future D&D of the TA-50 RLWTF has been completed.

6.7 AOC 50-003(a)—Container Storage Area

6.7.1 Site Description and Operational History

AOC 50-003(a) is a former RCRA interim-status unit that was located in room 59 of building 50-1 (Figure 6.2-1). This unit was used to store containers of solid, cemented, mixed-TRU sludge resulting from waste treatment activities. During its period of operation, this AOC operated in accordance with the requirements of 20.4.1.600 New Mexico Administrative Code (NMAC) 4.1 and 40 CFR 265, Subparts A–D and I. NMED approved clean closure for AOC 50-003(a) in November 2004 (NMED 2004, 098488). Investigation was not proposed in the investigation work plan (LANL 2008, 100750) because this is a RCRA closure site.

6.7.2 Relationship to Other SWMUs and AOCs

AOC 50-003(a) is located in room 59 of building 50-1, which is immediately east of AOC 50-002(d).

The following inorganic chemicals were detected (units in µg/filter) on at least one swipe sample: aluminum, antimony, arsenic, barium, beryllium, cadmium, calcium, chromium, cobalt, iron, lead, magnesium, manganese, nickel, potassium, sodium, vanadium, and zinc.

I-6.5.2 Organic Chemicals at AOC 50-002(d)

All four swipe samples were analyzed for PCBs and SVOCs. Table 6.6-1 summarizes the samples collected and the requested analyses for each sample.

Table 6.6-3 lists the detected organic chemicals. The sampling locations and detected concentrations are shown in Figure 6.6-3.

The following organic chemicals were detected (units in µg/filter) on at least one swipe sample: acenaphthene; anthracene; Aroclor-1260; benzo(a)anthracene; benzo(a)pyrene; benzo(b)fluoranthene; benzo(g,h,i)perylene; chrysene; fluoranthene; fluorene; indeno(1,2,3-cd)pyrene; 2-methylnaphthalene; naphthalene; phenanthrene; and pyrene.

I-6.5.3 Radionuclides at AOC 50-002(d)

All four swipe samples were analyzed for gamma-emitting radionuclides, isotopic plutonium, and isotopic uranium. Table 6.6-1 summarizes the samples collected and the requested analyses for each sample.

No radionuclides were detected on the swipe samples at AOC 50-002(d).

I-6.5.4 Summary of COPCs at AOC 50-002(d)

Inorganic and organic chemicals were detected on the swipe samples, but are not identified as COPCs. No BVs are available for swipe samples, and performing risk-screening assessments with swipe sampling results is not possible.

The inorganic chemicals detected on swipe samples at AOC 50-002(d) are aluminum, antimony, arsenic, barium, beryllium, cadmium, calcium, chromium, cobalt, iron, lead, magnesium, manganese, nickel, potassium, sodium, vanadium, and zinc.

The organic chemicals detected on swipe samples at AOC 50-002(d) are acenaphthene; anthracene; Aroclor-1260; benzo(a)anthracene; benzo(a)pyrene; benzo(b)fluoranthene; benzo(g,h,i)perylene; chrysene; fluoranthene; fluorene; indeno(1,2,3-cd)pyrene; 2-methylnaphthalene; naphthalene; phenanthrene; and pyrene.

No radionuclides were detected on swipe samples at AOC 50-002(d).

I-6.5.5 Nature and Extent of Contamination at AOC 50-002(d)

I-6.5.5.1 Nature and Extent of Inorganic Chemicals

Although inorganic chemicals were detected on swipe samples, the extent of those inorganic chemicals was not evaluated. The nature of the swipe samples does not make possible an evaluation of the extent of contamination, but the nitric acid tank is located such that any leaks would be contained by the concrete sump, thus defining the extent of potential contamination.

I-5.12.3 Nature and Extent of Contamination at AOC 48-012

I-5.12.3.1 Nature and Extent of Organic COPCs

All the organic chemicals detected at AOC 48-012 are in samples collected in 2002. Four locations on the site boundary were sampled in 2009 to define the lateral and vertical extent of the organic chemicals. Because no organic chemicals were detected in samples collected in 2009, the lateral and vertical extent of the organic COPCs are defined.

I-5.12.3.2 Summary of Nature and Extent for AOC 48-012

The lateral and vertical extent of all organic COPCs are defined at AOC 48-012.

I-6.0 COPCs FOR SITES AT TA-50

I-6.1 SWMU 50-001(a)

SWMU 50-001(a) is proposed for delayed investigation. Section 6.2 of the investigation report presents the details for this site.

I-6.2 AOC 50-001(b)

AOC 50-001(b) is proposed for delayed investigation. Section 6.3 of the investigation report presents the details for this site.

I-6.3 SWMU 50-002(a)

SWMU 50-002(a) is proposed for delayed investigation. Section 6.4 of the investigation report presents the details for this site.

I-6.4 Consolidated Unit 50-002(b)-00

Consolidated Unit 50-002(b)-00 is proposed for delayed investigation. Section 6.4 of the investigation report presents the details for this site.

I-6.5 AOC 50-002(d)

Four swipe samples were collected in 2009 from four locations at AOC 50-002(d). Table 6.6-1 summarizes the samples collected and the requested analyses for each sample. Figure 6.6-1 shows the sampling locations.

I-6.5.1 Inorganic Chemicals at AOC 50-002(d)

All four swipe samples were analyzed for TAL metals. Table 6.6-1 summarizes the samples collected and the requested analyses for each sample.

Table 6.6-2 lists the inorganic chemicals detected on the swipe samples at AOC 50-002(d). The sampling locations and detected concentrations are shown in Figure 6.6-2.

I-6.5.5.2 Nature and Extent of Organic COPCs

Although organic chemicals were detected on swipe samples, the extent of those organic chemicals was not evaluated. The nature of the swipe samples does not make possible an evaluation of the extent of contamination, but the nitric acid tank is located such that any leaks would be contained by the concrete sump, thus defining the extent of potential contamination.

I-6.5.5.3 Summary of Nature and Extent for AOC 50-002(d)

The lateral and vertical extent of inorganic and organic chemicals are not defined by the swipe sampling results.

I-6.6 AOC 50-003(a)

AOC 50-003(a) was approved for clean closure by NMED in November 2004 (NMED 2004, 098488), and no further investigation is needed. Section 6.7 of the investigation report presents the details for this site.

I-6.7 Consolidated Unit 50-004(a)-00

A total of 156 samples (57 soil, 98 tuff, and 1 sediment) were collected in 1993, 1994, 2003, and 2009 from 58 locations at Consolidated Unit 50-004(a)-00. Table 6.8-1 summarizes the samples collected and the requested analyses for each sample. Figure 6.8-1 shows the sampling locations.

I-6.7.1 Inorganic Chemicals at Consolidated Unit 50-004(a)-00

Eighty-eight samples were analyzed for nitrate. One hundred and fifty-five samples were analyzed for TAL metals. Eighty-two samples were analyzed for perchlorate and total cyanide. Table 6.8-1 summarizes the samples collected and the requested analyses for each sample.

Table 6.8-2 lists the inorganic chemicals above BVs and detected inorganic chemicals that have no BVs. The sampling locations and detected concentrations are shown on Plate 6.8-1.

I-6.7.1.1 Inorganic Chemicals in Soil

Twenty-three soil samples were analyzed for nitrate. Fifty-six samples were analyzed for TAL metals. Twenty-two samples were analyzed perchlorate and total cyanide.

Aluminum was detected above the BV (29200 mg/kg) in 1 of 56 soil samples, at a concentration of 32,300 mg/kg. This sample result did not exceed the maximum background concentration of aluminum in soil (61500 mg/kg). Statistical tests were performed to determine if the site sampling results for aluminum are different than background. The statistical test results are presented in Table I-6.7-1. The results of both the Gehan test and the quantile test indicate that the site sampling results are not statistically different than background. The box plot for aluminum in soil is presented in Figure I-6.7-1. Aluminum is not identified as a COPC in soil.

Antimony was detected above the BV (0.83 mg/kg) in 1 of 56 soil samples, with a maximum concentration of 8.6 mg/kg. Antimony also had DLs (1.06–6.7 mg/kg) above the BV in 54 soil samples. These DLs also exceeded the maximum soil background concentration (1 mg/kg). Statistical tests could not be performed because more than 80% of the combined data (background and site data) are nondetected values. The box plot for antimony in soil is presented in Figure I-6.7-2. Antimony is identified as a COPC in soil.

: 12752

From:	Kieling, John, NMENV
To:	Huddleson, Steven, NMENV; Cobrain, Dave, NMENV
Cc:	Pruett, Jennifer, NMENV; Hall, John, NMENV
Subject:	RE: Suggested Closure Language
Date:	Tuesday, September 16, 2014 10:09:16 AM

Steve,
Dave and I aee tied up in meetings this week.
We will work to get to it warly next week.

John

-------- Original message --------
From: "Huddleson, Steven, NMENV"
Date:09/16/2014 9:44 AM (GMT-07:00)
To: "Kieling, John, NMENV" ,"Cobrain, Dave, NMENV"
Cc: "Pruett, Jennifer, NMENV" ,"Hall, John, NMENV"
Subject: Suggested Closure Language

Dave and John, I am wrapping up the DP 1132 Draft and I have placed the following closure language into the permit. I would appreciate your comments on the language, intent, and effectiveness of the closure plan. Would you have any specific suggestions to improve this? I would be happy to discuss or answer any questions you might have. We would like to get this out to LANL at the end of the week.

A. Closure

1. **CESSATION OF OPERATION OF SPECIFIC UNITS-** Within 60[JP1] days of the effective date of this Discharge Permit (by DATE), the Permittees shall permanently cease operation of the following units:
   a. The 75,000 gallon concrete influent storage tank (75K tank[SH2]);
   b. The 100,000 gallon steel influent storage tank (100K tank);
   c. The two 26,000 gallon concrete clarifiers located within Building 1 of TA-50;
   d. The two 25,000 gallon concrete effluent storage tanks (WM2-N, WM2-S); and
   e. The gravity filter located within Building 1 of TA-50.

   Upon the cessation of operation of these specific units, the Permittees shall implement the requirements for stabilization of the individual units, systems and components in accordance with this Discharge Permit.

   [NMSA 1978, § 74-6-5.D, 20.6.2.3107.A NMAC, 20.6.2.3109.B NMAC, 20.6.2.3109.E NMAC]

2. **STABILIZATION OF INDIVIDUAL UNITS AND SYSTEMS** - Within 120 days from the permanent cessation of operation of a unit or system, the Permittees shall submit to NMED for approval a written work plan for the stabilization of the unit or system for which operation has ceased. The work plan shall identify characterization activities to be taken, and steps necessary to ensure that the unit or system can no longer receive a discharge and that no further releases of water contaminants occur as a result of the unit or system. At a minimum, the work plan shall include the following:

   a. Identification of the unit or system in which cessation of use has occurred;

   b. A detailed description of the function of the unit or system;

   c. A detailed description of the historic influent waste streams to the unit or system;

   d. A detailed description of all conveyance lines leading to the unit or system and a description of how the lines will be terminated, plugged, re-routed or bypassed so that a discharge to the unit or system can no longer occur;

   e. Identification of those portions of the approved Closure Plan required in Condition 42 of this Discharge Permit that will be implemented*[SH3]*;

   f. A description of all proposed interim measures, actions and controls that will be implemented until such time of final removal of the unit, system or component to prevent the release of water contaminants into the environment; to prevent water contaminants, including storm water run-on and run-off, from moving into ground water; and to prevent water contaminants from posing a threat to human health;

   a. A detailed description of the actions that will be taken to investigate and characterize the potential impact to soil and groundwater from the facility, system, or individual*[SH4]* unit; and

   g. A schedule for implementation.

   Upon NMED approval of the work plan, the Permittees shall implement the plan according to the approved schedule.

   Within 30 days following the completion of all interim measures, actions and controls, the Permittees shall submit to NMED for approval a final written report on the actions taken to implement the partial closure. The Permittees' workplan and final written report along with NMED's response shall be posted, by the Permittees, on LANL's Electronic Public Reading Room located at http://eprr.lanl.gov/oppie/service (or as updated).

[NMSA 1978, § 74-6-5.D, 20.6.2.3107.A NMAC, 20.6.2.3109.B NMAC,

20.6.2.3109.E NMAC]

3. **CLOSURE PLAN-** Within 180 days from the effective date of this Discharge Permit (by DATE) the Permittees shall submit to NMED for approval a written closure plan for the Facility. The closure plan shall identify steps necessary to perform final closure of the Facility, including all units and systems at the Facility.

   At a minimum, the closure plan shall include the following:

   b. A detailed description of how each unit and system at the Facility will be closed.

   c. A detailed description of the actions to be taken to decommission, demolish, and remove each unit, system, and other structure, including any secondary containment system components.

   d. A detailed description of the actions and controls that will be implemented during closure to prevent the release of water contaminants into the environment; to prevent water contaminants, including run-on and run-off, from moving into ground water; and to prevent water contaminants from posing a threat to human health.

   e. A detailed description of the actions that will be taken to investigate and characterize the potential impact from the facility, system, or individual*[SH5]* unit.

   f. A detailed description of the methods to be used for decontamination of the site and decontamination of equipment used during closure.

   g. A detailed description of the actions that will be taken to reclaim the site, including placement of clean fill material and re-grading to blend with surrounding surface topography, minimize run-on and run-off, and prevent ponding of water, and re-vegetation.

   h. A detailed description of all monitoring, maintenance and repair, and controls that will be implemented after closure, and of all actions that will be taken to minimize the need for post-closure monitoring, maintenance and repair, and controls.

   i. A ground water monitoring plan to detect water contaminants that might move directly or indirectly into ground water after closure, which shall provide for, at a minimum, eight consecutive quarters of ground water monitoring after completion of closure.

   j. A detailed description of the methods that will be used to characterize all wastes generated during closure, including treatment residues, contaminated debris, and contaminated soil, in compliance with all local, state, and federal laws and regulations.

   k. A detailed description of the methods that will be used to remove, transport, treat, recycle, and dispose of all wastes generated during

closure in compliance with all local, state, and federal laws and regulations.

l. A detailed schedule for the closure and removal of each unit and system, which lists each proposed action and the estimated time to complete it.

If the Permittees make any changes to the Facility that would affect the implementation of the approved Closure Plan, the Permittees shall submit to NMED for approval a written notification and an amended Closure Plan. Permittees will provide annual updates to NMED describing modifications to the Closure Plan. All documents required to be submitted to NMED in this Condition by the Permittees along with NMED's responses shall be posted, by the Permittees, on LANL's Electronic Public Reading Room located at http://eprr.lanl.gov/oppie/service (or as updated).

[NMSA 1978, § 74-6-5.D, 20.6.2.3107.A NMAC, 20.6.2.3109.B NMAC, 20.6.2.3109.E NMAC]

4. **FINAL CLOSURE**-Upon cessation of operation of the Facility, system or individual unit, the Permittees shall implement the approved Closure Plan according to the approved schedule therein.

Once closure begins, and until all closure requirements (excluding post-closure ground water monitoring) are completed, the Permittees shall submit to NMED, with the monitoring reports required in this Discharge Permit, quarterly status reports describing the closure actions taken during the previous reporting period and the actions scheduled for the next reporting period. Within 90 days following the completion of the closure, the Permittees shall submit to NMED for approval a final written report on the actions taken to implement closure. The Permittees' quarterly status reports and final written report, along with NMED's response, shall be posted, by the Permittees, on LANL's Electronic Public Reading Room located at http://eprr.lanl.gov/oppie/service (or as updated).

[NMSA 1978, § 74-6-5.D, 20.6.2.3107.A NMAC, 20.6.2.3109.B NMAC, 20.6.2.3109.E NMAC]

Steve Huddleson, P.G., C.P.G.
Environmental Scientist
Groundwater Protection Bureau
New Mexico Environment Department
(505) 827-2936

[JP1]LANL requested 180 days, to which NMED objected.

[SH2]LANL has requested that this tank remain for use in upset conditions..for use in upset conditionsn asain as a wed to remain for use as additional containment for upset conditions. .for use in upset conditionsn asain as a wed to remain for use as additional containment for upset conditions.

[SH3]This requires that units taken out of service be closed as they are removed from service.

[SH4]It is appropriate that, to the extent possible given site constraints, an effort be bade to quantify potential impacts and releases from system components and the facility.

[SH5]It is appropriate that, to the extent possible given site constraints, an effort be bade to quantify potential impacts and releases from system components and the facility.

12758

Huddleson, Steven, NMENV

From: Beers, Bob <bbeers@lanl.gov>
Sent: Wednesday, September 17, 2014 4:32 PM
To: Huddleson, Steven, NMENV
Cc: Hall, John, NMENV; Pruett, Jennifer, NMENV; Del Signore, Chris; Turner, Gene E; Saladen, Michael Thomas
Subject: FW: A Question

Steve,

Back on September 3rd you asked about the seismic standards that were followed for the construction and subsequent upgrades of the RLWTF (Question #2 below).
I posed your question to a LANS engineer and received the following reply:

The original RLW building was designed and constructed in 1963, presumably to the Uniform Building Code (UBC) in place at the time. Additions since the original construction were designed to the UBC that was in place at the time. With time, the codes have gotten more stringent with respect to seismic criteria. However the codes have provisions on how to handle upgrades and additions. The additions to the original RLWTF neither degraded the capacity of the original construction nor modify the original construction such that strengthening the original structure was required by code.

Please let me know if you have additional questions on this matter.

Sincerely,

Bob Beers
Los Alamos National Security, LLC

From: Beers, Bob
Sent: Thursday, September 04, 2014 2:24 PM
To: Huddleson, Steven, NMENV (Steven.Huddleson@state.nm.us)
Cc: Hall, John, NMENV (john.hall@state.nm.us); Pruett, Jennifer, NMENV (Jennifer.Pruett@state.nm.us); Del Signore, Chris; Turner, Gene E; Trujillo, Eric L. (Eric.Trujillo@nnsa.doe.gov); Saladen, Michael Thomas
Subject: FW: A Question

Steve,

Regarding question #1: *John and I are working on the discharge permit and trying to recall the status of the two 25,000 gallon concrete effluent tanks. Are those currently in service or have they been replaced?*

On August 10, 2012, DOE/LANS submitted to NMED supplemental information (ENV-RCRA-12-0173) to the February 2012 Discharge Permit Application. The cover letter (attached) contained the following table that identified 7 vessels DOE/LANS proposed to remove from service. The tanks you reference, *two 25,000 gallon concrete effluent tanks,* are the former effluent storage tanks, WM2-North and WM2-South, listed in the table below. WM2-N and WM2-S no longer receive treated effluent; treated effluent is stored in the North and South Frac Tanks located in TA-50 Building 1. WM2-N and WM2-S are presently receiving blow-down from the evaporator (blow-down can also be directed to storage tank TK-9) but the facility's goal is to empty those tanks and remove them from service. Presently, WM2-N is nearly empty and WM2-S is approximately 30% full.

: 12759

Existing Vessel				Replacement Vessel	
Location	Vessel	Vessel Use	Volume (gal.)	Location	Vessel
TA-50-02	75K tank	Influent storage	75,000	TA-50-250	WMRM Tanks (2)
TA-50-02	WM2-North	Effluent storage	25,000	na	na
TA-50-02	WM2-South	Effluent storage	25,000	na	na
TA-50-01	Clarifier #1	Chemical precipitation	20,000	TA-50-01	TK71
TA-50-01	Clarifier #2	Chemical precipitation	20,000	TA-50-01	TK72
TA-50-01	Gravity Filter	Solids separation	7,000	TA-50-01	filter/sludge/clean[2]
TA-50-90	100K Tank	Influent storage	100,000	na	na

[1]Capacity is for each tank.
[2]Microfilter

Regarding question #2: *Second, the current building housing the bulk of the RLWTF, what seismic standards were followed for the construction and/or subsequent construction upgrades apply to the current building. I have been focused on the new construction and didn't think to ask about the existing building.*

You refer to the *current building housing the bulk of the RLWTF*, I'll assume you are referring to TA-50 Building 1, constructed in 1962. The facility would have been built to the seismic standard of the time but what that specific standard was will require going back to the original code of record. I've asked an experienced engineer at LANS to research your question but unfortunately I don't expect any answers for at least several weeks.

Regards,

Bob Beers
Los Alamos National Security, LLC
505-667-7969

From: Huddleson, Steven, NMENV [mailto:Steven.Huddleson@state.nm.us]
Sent: Wednesday, September 03, 2014 12:59 PM
To: Beers, Bob
Cc: Hall, John, NMENV
Subject: A Question

Bob, before you get away to the mountains of Wyoming could I ask a question or two? John and I are working on the discharge permit and trying to recall the status of the two 25,000 gallon concrete effluent tanks. Are those currently in service or have they been replaced? Second, the current building housing the bulk of the RLWTF, what seismic standards were followed for the construction and/or subsequent construction upgrades apply to the current building. I have been focused on the new construction and didn't think to ask about the existing building. Any insight you can provide before you head out on holiday will help in keeping the momentum going whilst you are away.

Steve Huddleson, P.G., C.P.G.
Environmental Scientist
Groundwater Quality Bureau
Pollution Prevention Section
(505) 827-2936

: 12760

: 12761

Pullen, Steve, NMENV

From: Beers, Bob <bbeers@lanl.gov>
Sent: Thursday, September 18, 2014 1:57 PM
To: Huddleson, Steven, NMENV
Cc: Hall, John, NMENV; Katzman, Danny; Saladen, Michael Thomas; Pruett, Jennifer, NMENV; Paris, Steven M
Subject: RE: Reference for Sampling

Steve,

Per your request, below is a list of all standard operating procedures for measuring groundwater levels and collecting groundwater samples. Please keep in mind that these are living documents and, as such, are subject to revision. Accordingly, any reference to these documents should specify, 'the most current version'.

Let me know if you have questions.

Regards,

Bob Beers
Los Alamos National Security, LLC
505-667-7969

****

MY2015 Interim Facility-Wide Groundwater Monitoring Plan

This section summarizes Los Alamos National Laboratory (LANL or the Laboratory) standard operating procedures (SOPs) used to measure groundwater levels and to collect groundwater, base-flow, and spring samples. These procedures are listed in the table below and are summarized in subsequent sections. These procedures (or their equivalent) will be used during sampling activities conducted in accordance with this Interim Facility-Wide Groundwater Monitoring Plan (the Interim Plan). The SOPs are listed at http://www.lanl.gov/community-environment/environmental-stewardship/plans-procedures.php, and are available at the Los Alamos National Laboratory Public Reading Room at http://eprr.lanl.gov.

B-1.0 PROCEDURES FOR MEASURING GROUNDWATER LEVELS AND COLLECTING WATER SAMPLES

: 12762

Procedure Identifier	Procedure Title	Applicability
Measurement of Groundwater Levels		
SOP-5223	Manual Groundwater Level Measurements	Procedure for measuring depth to groundwater and determining groundwater elevation in a monitoring well or an open borehole
EP-DIV-SOP-10010	Pressure Transducer Installation, Removal, and Maintenance	Procedure to install, remove, and maintain pressure transducers to monitor and record water-level data in monitoring wells and piezometers
SOP-5226	Westbay Pressure Transducer Installation, Removal, and Maintenance	Procedure to install, remove, and maintain pressure transducers to monitor and record water-level data in Westbay monitoring wells
SOP-5230	Groundwater-Level Data Processing, Review, and Validation	Procedure to review and validate groundwater-level data obtained from pressure transducers
EP-DIV-SOP-20006	Pressure Monitoring of Packer Systems in Monitoring Wells	Procedure for monitoring and maintenance of Baski sampling system packers and temporary packers installed in water wells
Collection of Groundwater Samples		
EP-DIR-SOP-20032	Groundwater Sampling	Procedure for sampling groundwater using various types of pumps. Procedure also addresses sampling of water supply wells and domestic wells
SOP-5225	Groundwater Sampling Using Westbay MP System	Procedure for sampling groundwater using the Westbay multiport (MP) system
EP-ERSS-SOP-5061	Field Decontamination of Equipment	Procedure for field decontamination of equipment
Collection of Surface Water and Spring Samples		
SOP-5224	Spring and Surface Water Sampling	Procedure for sampling springs and surface water
Sample Preparation, Preservation, and Transportation		
EP-ERSS-SOP-5059	Field Quality Control Samples	Procedure for collection of field quality control (QC) samples, including field duplicates, equipment rinsate blanks, and trip blanks
EP-ERSS-SOP-5056	Sample Containers and Preservation	Procedure specifying sample containers, collection and preservation techniques, and holding times
EP-ERSS-SOP-5057	Handling, Packaging, and Transporting Field Samples	Procedure for sample packaging and shipping
SOP-5255	Shipping of Environmental Samples by the WES SMO	Procedure for receiving, packaging, and shipping samples to analytical laboratories

Procedure Identifier	Procedure Title	Applicability
Field Activities Documentation		
SOP-5181	Notebook and Logbook Documentation for Environmental Directorate Technical and Field Activities	Procedure for documenting technical work and field activities in a notebook or logbook
Waste Management		
EP-DIR-SOP-10021	Characterization and Management of Environmental Program Waste	Procedure for characterizing and managing generated waste

From: Huddleson, Steven, NMENV [mailto:Steven.Huddleson@state.nm.us]
Sent: Thursday, September 18, 2014 12:37 PM
To: Beers, Bob
Cc: Hall, John, NMENV
Subject: Reference for Sampling

Bob, please send me the citation/identification for your sampling protocols so I can reference it in the text of the DP. Please pass my thanks on to Danny for coming down today to brief me on the hydrogeology and well net, it was extremely helpful.

Steve Huddleson, P.G., C.P.G.
Environmental Scientist
Groundwater Protection Bureau
New Mexico Environment Department
(505) 827-2936

: 12764

: 12765

From:	Huddleson, Steven, NMENV
To:	Pruett, Jennifer, NMENV; Hall, John, NMENV; Schoeppner, Jerry, NMENV
Subject:	DP-1132 Latest (9-18-14 version)
Date:	Thursday, September 18, 2014 3:38:15 PM
Attachments:	DP1132 DraftDP SMH 09-18-14.docx

Had a great meeting with Danny Katzman today, very impressive. I have modified the sampling protocol language to allow LANL to submit their SOPs for monitoring, sampling, purging to be consistent with the facility wide sampling. I could just incorporate this instead of our standard language, but this buys us some time. I have added two regional wells based on our discussions today. There was one comment from Jennifer Hower regarding the last part of condition 3 that I defer to you Jennifer. I accepted all of the formatting changes to clean up the document.

Steve Huddleson, P.G., C.P.G.
Environmental Scientist
Groundwater Protection Bureau
New Mexico Environment Department
(505) 827-2936

12767

Pullen, Steve, NMENV

From: Chiasson, Jim, NMENV
Sent: Monday, September 22, 2014 10:41 AM
To: Huddleson, Steven, NMENV
Cc: Hall, John, NMENV
Subject: LANL WWTF Plans and SPecs Review

Steve/John:

As per our conversation last week regarding my engineering review of the proposed LANL WWTF plans and specifications I am sending this email as a written recap of my review. I went through the Plans and specifications over two days and by and large find the design plans and the specifications used for the facility to be robust and worthy of a facility treating wastewater from the facilities at LANL with radioactive constituents in it. The design parameters for materials specified and the overall design of the facility were in my professional judgment to be well thought out in general. However, having said this, as I stated at our meeting, the design of a facility such as this is only as good as the construction and oversight of the project. If we assume that the construction of the facility is per plan and within conformance of the specifications and reasonable construction standards, then any major issue that may arise with the facility will likely occur and be an issue with the facilities operations.

During my review, however, I did note several key points or issues that I believe should be addressed within the design in order to enhance both the overall operations of the facility as well as improve the GWQBs ability to enforce a reasonable permit for the discharge from the facility. My comments as such are as follows:

1. I would recommend that you discuss with LANL and insure that our assumption that the Batch process will allow an outside (third party) Laboratory to test and provide results to the Facility prior to release of any effluent (regardless of whether that is to the evaporation pond, the boiler or the receiving stream). This will insure that all treated water definitively meets the discharge standard prior to release.

2. I would recommend that there be several effluent discharge flow meters after the discharge holding tanks. One on the main line and one on each discharge option line, including one near the arroyo, one just before the boiler and one at the evaporation pond so as to insure that accurate discharge data is secured and to better insure that the integrity of the discharge line is in tact, and if ever the case, the amount of water loss at discharge could be determined.

3. As for the evaporation pond, my biggest concern regarding the evaporation calculations is that they appear to be based on the monthly rainfall and discharge to the line and not on a singular (large) storm event. I would question the engineer and ask if this had been done, and if not, that the calculation for a singular (summer) 100-year rain event on the evaporation pond be calculated to insure that the pond will have sufficient free board to hold the rainwater and any effluent already within in. IF not then my next comment below will be that much more pertinent.

4. Finally, I believe there should be a hard (permanent) line and pump from the bottom of the evaporation pond back to the influent holding tanks and/or the boiler system. The reason for this is primarily two fold. First if a major storm event occurred and the pond were unable to hold the water or the spray evaporation process were to ever fail or fall behind what has been calculated, then the water could be brought back either to the front of the facility or sent to another discharge process (i.e. boiler). Secondly if by chance it were ever determined that a higher level of contaminants were inadvertently released from the treatment facility to the evaporation pond, the water could be circulated back tot eh front of the system and run through the facility again. Although this could be done with a pumper truck and proper hosing, having the hard line in there would be preferable.

So I hope this review and some of these comments are helpful and beneficial to your permit process. Please let me know if you should have any further questions or comments on this matter. I probably wouldn't mind going up there in the future to see the finished facility at some point if possible.

Best Regards,

: 12768

Jim Chiasson, P.E.
Chief
Construction Programs Bureau

: 12769

: 12770

: 12771

	Page #	Description	Remaining Issues
1	44	No. 42 Closure Plan	Current Closure Plan language is acceptable with the exception of two issues: 1. Current plan does not link closure with the Consent Order. 2. CCW's proposal to require public notice of the Closure Plan with the final draft permit.
2	NA	NA	CCW's request for financial assurance.
3	48	Posting to EPRR	Current draft permit lists 43 required postings to EPRR which are scattered throughout the permit. DOE/LANS proposed eliminating the 43 scattered requirements in favor of a single paragraph listing 13 postings, and eliminating any penalties or enforcement related to such posting requirements.
4	23	Emergency Plan	CCW has requested reinstatement of the condition titled, *Emergency Plan.*
5	27	No. 23 Waste Tracking	Two issues with this condition: 1. "*...or from*" makes tracking non-liquid wastes a permit requirement. 2. Tracking "*time period the waste stream was conveyed to the facility*" is not possible.
6	25	No. 17 Calibration Flow Meters	Industry standard for flow meter calibration is +/- 10%, not +/-5% as CCW has proposed. [References: NPDES permit +/-10%; GWQB Exhibit +/-10%; EPA guidance +/-10%]
7	6	Definitions: Secondary Containment	Definition of secondary containment does not define *"surround the primary unit completely"* and *"pressure gradients".*
8	17	No. 8 Tightness Testing	Use of ALARA for determining compliance with leak testing is unacceptable to both DOE/LANS and CCW.
9	43	No. 41 Stabilization of Units	New requirement added "*characterization activities*" to stabilization of units. This extends the scope of the condition into closure and may conflict with requirements under the March 1, 2005, Compliance Order on Consent.
10	22	No. 14 Effluent Limits: MES & SET	Interim effluent limits for nitrate were dropped from Condition No. 14 in the revised draft permit.
11	30-31	No. 27 GW Monitoring	Condition No. 27 needs to be divided into two sections: 1. Monitoring at existing wells, and 2. Submittal of a work plan for two new alluvial wells. Remove references to MCO-3 and MCO-7.
12	11	V.D TRU Treatment System	Confirm removal of redlined sentence, "*All wastestreams associated with TRU shall be disposed of at an off site facility permitted to receive TRU waste*".
13	21	Nos. 13 & 14, Effluent Limits	DOE/LANS propose the following change to the compliance schedules in Condition Nos. 13 & 14 for Total Nitrogen and Nitrate, respectively: *"September 30, 2015"* to *"365 days after effective date of the permit*"
14	42	No. 40, Cessation of Operation	Two issues with this condition: *1.* Strike last sentence in this condition, *"Upon the cessation of operation of these specific units, the permittees shall implement the requirements for stabilization of the individual units, systems and components in accordance with this Discharge Permit".* This conflicts with Condition No. 41; stabilization cannot begin without NMED approval. 2. Add clarifying language to allow use of the 75k tank not for influent storage but as a contingency sump.
15	NA	NA	DOE/LANS reserve the right to object or comment on issues raised or identified by CCW

12772

Pullen, Steve, NMENV

From: Schoeppner, Jerry, NMENV
Sent: Friday, September 26, 2014 1:59 PM
To: Huddleson, Steven, NMENV
Cc: Pruett, Jennifer, NMENV
Subject: FW: RLWTF
Attachments: NMED Response_WMRM TP Request.pdf; Enclosure 2_NMED letter_denial of WMRM TP request_3-6-14.pdf

Steve:
Please schedule a short internal meeting so we can discuss this once you've had a chance to review.

Jerry

From: Hower, Jennifer, NMENV
Sent: Friday, September 26, 2014 10:49 AM
To: Schoeppner, Jerry, NMENV
Subject: FW: RLWTF

See below and attached.

Jennifer L. Hower
Deputy General Counsel
New Mexico Environment Department
5500 San Antonio Dr. NE
Albuquerque, NM 87109
Office: (505) 222-9550
Cell: (505) 500-7628
Fax: (505) 222-9510

From: Susan McMichael [mailto:susanmcm_us@yahoo.com]
Sent: Friday, September 26, 2014 10:44 AM
To: Hower, Jennifer, NMENV
Cc: Lisa Cummings
Subject: RLWTF

Jennifer,

Please disregard the two letters attached to Lisa Cummings email (9:22 am), and review the attached letters (dated April 1, 2014 and March 6, 2014).

As stated in the attached April 1, 2014 letter, LANL previously requested temporary permission to discharge no more than 40,000 gallons per day into the new WMRM tanks which replace 6 old, un-inspectable tanks. NMED initially denied that request (March 6th letter), but this was prior to meeting with facility representatives and learning about how the WMRM tanks would be used. After these meetings, on April 1, 2014, NMED determined that LANL's request for temporary permission was not required. As stated in the April letter, the placement of the wastewater in the new WMRM tanks is "prior to treatment of the low level waste, and therefore is an operational change, and not a

change in location, quantity, or quality of the resultant discharge." (page 2). The letter also states that LANL/DOE will cease the use of the new tanks 120 days from the date of discharge unless a pending DP has been approved.

Although the use of the WMRM tanks does not require NMED approval as a temporary permission, we are concerned because the 120-day time period will expire @ October 25th. At the present time, LANL RLWTF operations has not completed the shake-down and established SOPs (which are based in part on the results of the shake down testing). LANL would like to continue to use the WMRM tanks, and it will take considerable amount of time, effort and resources to convert back to the older 6 tanks (it is not a simple task). If required to revert back to the older 6 tanks, this will take approximately 2 weeks to prepare.

Since continued use of the WMRM tanks did not require temporary permission and is not "a change in location, quality, or quantity of the discharge," it is unclear what regulatory mechanism would apply under these circumstances. We thought perhaps that the best path forward to address this issue would be a request for extension, and would like to get your feed-back.

We'd like to get this issue resolved as soon as possible,

Thank you,

Susan McMichael

: 12774

NEW MEXICO
ENVIRONMENT DEPARTMENT

Ground Water Quality Bureau

Harold Runnels Building
1190 St. Francis Drive
PO Box 5469, Santa Fe, NM 87502-5469
Phone (505) 827-2918 Fax (505) 827-2965
www.nmenv.state.nm.us

SUSANA MARTINEZ
Governor
JOHN A. SANCHEZ
Lieutenant Governor

RYAN FLYNN
Secretary
BUTCH TONGATE
Deputy Secretary

CERTIFIED MAIL – RETURN RECEIPT REQUESTED

April 1, 2014

Ms. Alison Dorries, LANS-EP-RS
Los Alamos National Security, LLC
P.O. Box 1663 MS K404
Los Alamos, NM 87545

Mr. Gene Turner, DOE/AIP/POC
U.S. Department of Energy
Los Alamos Site Office, MS A316
528 35th Street
Los Alamos, NM 87545

RE: Temporary Permission to Discharge, Waste Mitigation and Risk Management (WMRM) Influent Storage Tanks at Los Alamos National Laboratory's Radioactive Liquid Waste Treatment Facility (RLWTF), DP-1132 (PRD20130011)

Dear Mr. Turner and Ms. Dorries:

The New Mexico Environment Department (NMED) reviewed your request, dated October 3, 2013, for temporary permission to discharge no more than 40,000 gallons per day of low-level radioactive liquid wastewater to newly installed tanks. Following review of your request, NMED issued a draft denial and scheduled a site tour/inspection of the RLWTF to learn more about the operation of the treatment facility and resulting discharge. NMED understands that Low-level radioactive liquid wastewater enters the facility through the influent collection system and is stored in the existing Waste Mitigation and Risk Assessment (WMRM) tanks prior to treatment at the Radioactive Liquid Waste Treatment Facility (RLWTF). Six (6) new tanks have been installed in order to replace the old, un-inspectable tanks, but have not been placed into operation pending the approval of DP-1132. The old as well as the new WMRM tanks are located within Los Alamos National Laboratory, approximately 1.5 miles south of Los Alamos, New Mexico, in Section 22, Township 19N, Range 06E, Los Alamos County.

Upon completion of the tour/inspection, it was clarified that Los Alamos National Security/U.S. Department of Energy's request for Temporary Permission to discharge is not required. LANS/DOE plans to place low level wastewater influent from the collection lines into two of the six newly constructed WMRM storage tanks at a maximum capacity of 80% for a 120 day period

as part of the existing operation of the treatment facility in order to complete shake-down of the system and establish Standard Operating Procedures. The placement of the low level wastewater in the new WMRM tanks is prior to treatment of the low level waste and is therefore an operational change and not a change in the location, quality, or quantity of the resultant discharge. Therefore, Temporary Permission to discharge is not required and LANS/DOE can proceed with their 120 day operational test.

LANS/DOE will cease use of the new tanks 120 days from the date discharge commences, unless the pending Discharge Permit has been approved by the Secretary.

This change in operation does not relieve you of the responsibility to comply with any other applicable federal, state, and/or local laws and regulations, such as zoning requirements and nuisance ordinances. Also, this change in operation does not relieve you of liability should your operation result in actual pollution of surface or ground waters.

If you have any questions, please contact me at 505-827-2919.

Sincerely,

Jerry Schoeppner, Chief
Ground Water Quality Bureau

cc: Robert Italiano, District Manager, NMED District II
NMED Santa Fe Field Office
James Hogan, NMED SWQB, via electronic transmission to james.hogan@state.nm.us
John Kieling, NMED HWB, via electronic transmission to john.kieling@state.nm.us
Dave Cobrain, NMED HWB, via electronic transmission to dave.cobrain@state.nm.us
Steven Yanicak, NMED-DOE-Oversight Bureau, via electronic transmission to steve.yanicak@state.nm.us
Hai Shen, LASO-EO, via electronic transmission to hai.shen@nnsa.doe.gov
Carl Beard, PADOPS, via electronic transmission to cbeard@lanl.gov
Michael T. Brandt, ADESH, via electronic transmission to mtbrandt@lanl.gov
Randal S. Johnson, DSESH-TA55, via electronic transmission to randyj@lanl.gov
Robert C. Mason, TA55-DO, via electronic transmission to rcmason@lanl.gov
William H. Schewttmann, IPM, via electronic transmission to bills@lanl.gov
Dianne W. Wilburn, TA55-DO, via electronic transmission to dianne@lanl.gov
John C. Del Signore, TA55 RLW, via electronic transmission to jcds@lanl.gov
Michael T. Saladen, ENV-RCRA, via electronic transmission to saladen@lanl.gov
Robert S. Beers, ENV-RCRA, Los Alamos National Laboratory, K490, Los Alamos, NM 87545

NEW MEXICO
ENVIRONMENT DEPARTMENT

Ground Water Quality Bureau

SUSANA MARTINEZ
Governor

JOHN A. SANCHEZ
Lieutenant Governor

Harold Runnels Building
1190 St. Francis Drive
PO Box 5469, Santa Fe, NM 87502-5469
Phone (505) 827-2918 Fax (505) 827-2965
www.nmenv.state.nm.us

RYAN FLYNN
Secretary

BUTCH TONGATE
Deputy Secretary

CERTIFIED MAIL – RETURN RECEIPT REQUESTED

March 6, 2014

Ms. Alison Dorries, LANS-EP-RS
Los Alamos National Security, LLC
P.O. Box 1663 MS K404
Los Alamos, NM 87545

Mr. Gene Turner, DOE/AIP/POC
U.S. Department of Energy
Los Alamos Site Office, MS A316
528 35th Street
Los Alamos, NM 87545

RE: Denial of Request for Temporary Permission to Discharge, Waste Mitigation and Risk Management (WMRM) Influent Storage Tanks at Los Alamos National Laboratory's Radioactive Liquid Waste Treatment Facility (RLWTF), DP-1132 (PRD20130011)

Dear Mr. Turner and Ms. Dorries:

The New Mexico Environment Department (NMED) has reviewed your request, dated October 3, 2013, for temporary permission to receive up to 40,000 gallons per day of low-level radioactive wastewater through the WMRM influent storage tanks. Low-level radioactive wastewater enters the facility through the influent collection system and would be stored in the WMRM influent storage tanks for processing at the RLWTF. The WMRM influent storage tanks are located within Los Alamos National Laboratory, approximately 1.5 miles south of Los Alamos, New Mexico, in Section 22, Township 19N, Range 06E, Los Alamos County.

During the public notice period for the Draft Discharge Permit (DP-1132) which ended December 12, 2013, NMED received public comments and requests for a public hearing. It is the Ground Water Quality Bureau's long-standing position that granting temporary permission to discharge while public comments and requests for hearing are pending would deny the public the opportunity to provide information on the draft discharge permit prior to the commencement of the discharge (to the new WMRM influent storage tanks). Therefore, your request for temporary permission to receive up to 40,000 gallons per day of low-level radioactive liquid wastewater through the WMRM influent storage tanks is denied.

: 12777

If you have any questions, please contact Jerry Schoeppner at (505) 827-2918 or Jennifer Pruett at (505) 827-0652.

Sincerely,

Jerry Schoeppner, Chief
Ground Water Quality Bureau

JS:JF

cc: Robert Italiano, District Manager, NMED District II
NMED Santa Fe Field Office
James Hogan, NMED SWQB, via electronic transmission to james.hogan@state.nm.us
John Kieling, NMED HWB, via electronic transmission to john.kieling@state.nm.us
Dave Cobrain, NMED HWB, via electronic transmission to dave.cobrain@state.nm.us
Steven Yanicak, NMED-DOE-Oversight Bureau, via electronic transmission to steve.yanicak@state.nm.us
Hai Shen, LASO-EO, via electronic transmission to hai.shen@nnsa.doe.gov
Carl Beard, PADOPS, via electronic transmission to cbeard@lanl.gov
Michael T. Brandt, ADESH, via electronic transmission to mtbrandt@lanl.gov
Randal S. Johnson, DSESH-TA55, via electronic transmission to randyj@lanl.gov
Robert C. Mason, TA55-DO, via electronic transmission to rcmason@lanl.gov
William H. Schewttmann, IPM, via electronic transmission to bills@lanl.gov
Dianne W. Wilburn, TA55-DO, via electronic transmission to dianne@lanl.gov
John C. Del Signore, TA55 RLW, via electronic transmission to jcds@lanl.gov
Michael T. Saladen, ENV-RCRA, via electronic transmission to saladen@lanl.gov
Robert S. Beers, ENV-RCRA, Los Alamos National Laboratory, K490, Los Alamos, NM 87545

: 12779

NEW MEXICO
ENVIRONMENT DEPARTMENT

Ground Water Quality Bureau

Harold Runnels Building
1190 St. Francis Drive
P.O. Box 5469, Santa Fe, New Mexico 87502-5469
Phone (505) 827-2855 Fax (505) 827-2965
www.nmenv.state.nm.us

SUSANA MARTINEZ
Governor

JOHN A. SANCHEZ
Lieutenant Governor

U.S. Postal Servic
CERTIFIED MA
(Domestic Mail Only; No
For delivery information visi
OFFIC
Postage $
Certified Fee
Return Receipt Fee
(Endorsement Required)
Restricted Delivery Fee
(Endorsement Required)
Bob Beers, ENV
Los Alamos Nat
PO Box 1663, N
Los Alamos, NM
7008 1830 0003 4178 7371

October 3, 2014

Robert Beers, ENV-RCRA,
Los Alamos National Laboratory
P.O. Box 1663 MS K497
Los Alamos, New Mexico 87545-0001

RE: Comments on 90% and 100% Design Specifications
Radioactive Liquid Waste Treatment Facility – Upgrade Project

The New Mexico Environment Department, Groundwater Quality Bureau (GWQB) has received from the Department of Energy and Los Alamos National Security LLC (DOE/LANS) design documents for the Radioactive Liquid Waste Treatment Facility Upgrade Project (RLWTF UP) including:

- 90% design plans and specifications for the RLWTF UP at Technical Area (TA)-50, including supplemental information to discharge permit application DP-1132.
- 100% design plans and specifications in fulfillment of NMAC Section 20.6.2.1202.

The DOE/LANS has requested comments from GWQB on the referenced plans and specifications. GWQB has reviewed both the 90% and 100% submittals as well as supplemental information to DP-1132 for compliance with basic elements necessary for protection of groundwater quality. GWQB makes no comment regarding the design adequacy, compliance with applicable State, Federal, and local statute, code and requirements.

The review confirms that the design, construction specifications, proposed systems and calculations are generally appropriate, and include adequate safeguards to protect groundwater quality including secondary containment, structural integrity, capacities, appropriate materials, and leak detection systems. As a sealed engineering document, GWQB relies on the design engineer for the efficacy of the design to meet permit requirements. GWQB similarly relies on DOE/LANS to provide adequate construction oversight to ensure conformance with the design specifications. Construction of the facility prior to issuance of the final approved Discharge Permit will proceed at the risk of DOE/LANS, should DOE/LANS decide to proceed before GWQB issues the final permit.

GWQB appreciates the opportunity to provide these comments to the proposed RLWTF UP. Please contact myself, or Steven Huddleson, P.G., C.P.G., if you have any questions.

Sincerely,

Jerry Schoeppner, Chief
Groundwater Protection Bureau

Cc: John Kieling, Hazardous Waste Bureau
Jim Chiasson, Construction Programs Bureau
Jennifer Pruett, Groundwater Quality Bureau
Bruce Yurdin, Surface Water Quality Bureau
Jennifer Hower, Office of General Counsel

: 12782

NEW MEXICO
ENVIRONMENT DEPARTMENT

Harold Runnels Building
1190 South St. Francis Drive (87505)
P.O. Box 5469, Santa Fe, New Mexico 87502-5469
Phone (505) 827-2900 Fax (505) 827-2965
www.nmenv.state.nm.us

SUSANA MARTINEZ
Governor

JOHN A. SANCHEZ
Lieutenant Governor

RYAN FLYNN
Cabinet Secretary

BUTCH TONGATE
Deputy Secretary

Agenda
October 9, 2014 Meeting
DP-1132

09:30	Introductions
10:00	Discussion Topics

- Discharge Limits
- Notification Language
- Closure Plans
- Groundwater Monitoring
- Additional Discussion Items DP-1132 (time permitting)

11:30	LANL Wrap Up Comments
11:45	CCW Wrap Up Comments
12:00	GWQB Wrap Up – Next Steps
12:30	Conclude Meeting

Name	Org	email	phon
Steve Huddleson	NMED	Steven.Huddleson@state.nm.us	827-02
Chris Del Signore	LANS		
Kathy Wampovi Sanchez	CCW-TWU	Kathy@tewawomenunited.o	901.942-0
Doris Bradshaw	DDMTCCC	ddmtccc411@yahoo.c	
Bob Beers	LANS	bbeers@lanl.gov	
GENE TURNER	NNSA	gene.turner@nnsa.doe.g	
Alison Dornies	LANS	adornies@lanl.gov	
Eric Trujillo	NNSA	Eric.Trujillo@nnsa.doe.gov	
Mike Saladen	LANS	saladen@lanl.gov	
Danny Katzman	LANL	katzman@lanl.gov	
Brian Shields	Amigos Bravos	BSHIELDS@AMIGOSBRA	
Joni Arends	CCNS	jarends@nuclearactive.org	
Marian Naranjo	HOPE	mariann2@windstream.net	
Rachel Conn	Amigos Bravos/CCW	rconn@amigosbravos.o	
Beata Tsosie-Peña	TWU-CCW	beata@tewawomenunited.or	
Trais Kliphuis	NMED	trais.kliphuis@state.nm.	827-1758
Jerry Schreppner	NMED	jerry.schoeppner@state.nm.u	
Jennifer Pruett	NMED	jennifer.pruett@state.nm.us	

DP-1132 LANL/CCW Meeting October 9, 2014

Start: 9:30 a.m.

Introductions:

JJP
Trais Kliphuis
Steve Huddleson
Chris Del Signore
Kathy Wanpovi-Sanchez (San Ildelfonso)
Doris Bradshaw (DDMTCCC)
Alison Dorries, LANS
Bob Beers LANS
Gene Turner DOE
Eric Trujillo DOE
Mike Saladen LANS
Danny Katzman
Robert Shields
Joni Arends CCNS
Marian Naranjo Honor Our Pueblo Existence
Rachel Conn
Beata Tsosie-Pena Tewa Women United
Jerry Schoeppner

Discussion Topics

Bob distributed schematic/floorplan of facility and aerial photo of facility

Chris:

Bldg 250 Waste Management Risk Mitigation (influent storage facility, emergency storage facility; 6 – 50,000 influent source tanks of fiberglass) – to address possible storm water or other emergency situation; immediately above the tanks is a grating so you can see down into the basement – nothing is on top of the grating. The basement walls serve as secondary containment, made of concrete with sealer. To the side, is the area where you walk in, which is storage for spare parts, etc. 2 tanks will be dedicated to rad LW, the others are for overflow or emergency capacity.

Bldg 1 is fed from all around LANL, collection system is 4 miles long (20+ other buildings that general rad liquid waste. Right now it isn't going to WMRM; had TP for testing period but have stopped using until receive DP-1132.

Collection system and piping built in 1980s.

Brian: Any RCRA oversight?

Chris: they don't have RCRA waste

Gene: they have some RCRA waste that is exempt, some waste is corrosive but is neutralized and exempt

Joni: 2 pads (1 indoor, 1 outdoors) are in RCRA permit for storage of drums of waste
Cemented drums of sludge are stored in Room 59 before disposal
Chris pointed out another solid waste management unit that is a SMU, not part of DP-1132, which is not on map (near Bldg 37)

Discharge Limits
Outfall and effluent limits pages 20-22, Conditions 13, 14
Old permit draft had a very low perc limit, set in anticipation of EPA establishing this low standard, but EPA did not. No perc limit in WQCC so took from Soil Screening Limits
Table 1 all 3103 numbers
Table 2 have 3 variants, taken from MCL
Some other constituents were also adjusted
We want to encourage the lab to start using the zero discharge items (MES and SET) rather than the Outfall
Chris: GW std is lower than DW std, so used DW std so could use tap water to work in calibrating and performing maintenance, because no discharge to GW is intended
Bob: requested items 13.b with schedule of compliance and 14 to get facilities up to compliance level. NMED put in #13 but **not in #14 – they want same delay until new RO is operating.**
Bob: Condition 13 and 14 are more stringent than current standards
Chris: currently meet stds about 70% of time; will be installing new equipment to meet stds 100% of time
Rachel: Discharge exemption page 10 IV.D: **please add effective and enforceable before effluent limitations**

Notification language
Steve: GWQB has little input, and not necessarily enforceable under WQA; LANL suggested alternate language and list of things to be posted on Electronic Reading Room, proposed consolidation in 1 Condition, exempt from enforcement and civil penalties
Allison: they can make some decisions in room, attorneys will have ultimate approval
Joni: public getting real time access without filing an IPRA and without charges, has been a real help to them and make things much faster; sometimes don't get materials from NMED within 30 days comment periods. Don't think this is a hardship for Lab, already have a dedicated webpage and IT program. Really helpful when CCW brings in new experts, etc.; they are very concerned about this facility bec it is such an important facility and it is so old
Gene: DOE is using the Public Elec R Room as a model; they will follow the same model as the RCRA permit by posting critical documents.

Mike: they listed any document that might trigger a permit modification, but not daily maintenance records, etc. They tried to make their list more manageable, modeled on more important items important to CCW

Steve will provide Joni with LANL's list, so CCW can see if there is anything missing that is really important to them

Rachel: question is compliance scenario, list of documents to be posted – they will look at list

Bob: more documents are beyond the scope of GWQB's authority, and they are currently posting many documents for other permits

Rachel thinks that if separated, postings might be missed

Bob thinks if postings consolidated then less likely to be missed

Joni is concerned because of proximity to GW and outfall, notes that very hard to trust LANL to do things because of failure to respond to FOIA filed last Thanksgiving

Closure Plans

Steve: Conditions 41, 42, 43. 42 Closure Plan: lab must propose within 180 days covering a list of items (including new item: investigation and characterization) for everything is a part of the RLWTF; plan must be updated annually so as pieces of equipment are replaced, new added and old are changed. Condition 40 covers specific units that are to be closed relatively soon, and indicate how these fit into the Closure Plan.

Chris: the vessels to be closed: Room 16: 2 clarifiers (40.c), gravity filter between them (40.e). In Bldg 50-2, 3 original cement tanks (by 34B) will be removed bec bottoms can't be inspected (40.d and 40.a.) flat-bottomed tank (40.b) will also be closed.

Chris: Secretary Flynn came after amended application filed in August 2012, and said single walled tank that couldn't be inspected on bottom was not acceptable (40.b).

Chris: they have stopped using the gravity filter & now use microfilter; made many changes to operations to eliminate need for the 7 vessels to be closed. WMRM testing completed 9/15, tanks now emptied.

Brian: stabilization section in Condition 41 needs a workplan and timeline for closing vessels. To NMED: wouldn't NMED want these plans in advance of cessation, so we can approve in advance?

Jerry: actions will require pre-approval.

Steve: stabilization plan is tied to cessation of use of each unit.

JP: DP requires both complete Closure Plan for each part of the facility, but specific workplan for each unit after cessation once we see what is there and what the closure needs are

Brian recommends closure in advance before building new items/equipment, so don't design & build inappropriately

Rachel: also so operational decisions can be made well with closure in mind, so easier, safer and more effective closure

Steve: that's the thinking in the requirement for annual update of Closure Plan

Rachel: no opportunity for public involvement in Closure Plan, because to be submitted after permit issued, after WQCC approval of DP

Brian: there needs to be public participation process for the Closure Plan, with a public hearing. The WQCC Regulations are clear about this. Definitions: DP defined as 4 items including Closure Plan. He thinks it's clear that the DP must contain a closure plan in it, so to put off 180 days beyond hearing and appeal is not acceptable to them. **NMED could put in the DP that there will be a hearing and public participation process, with possibility of appeal for either party – this is a minimum requirement for them, and a very important item for them.**

Joni: 3107.A(11) requires closure plan be submitted with DP application. How can NMED be proposing a permit without a closure plan?

Brian: major permits like Questa mine DP had 3 pages of closure plan details in it. He understands for other more minor DPs why this might not be required.

Steve: what was in the DP application? In original application, closure plan wasn't in sufficient detail, so addressed in specific conditions.

Rachel: maybe this is a timing question, but non-negotiable thing for them is that if the Closure Plan isn't in the DP, then there needs to be a public participation process including possible hearing and appeal

Jerry: we do this both ways. If a facility has been operating for many years, we often try to get the facility permitted with some specific items to come later. Other DPs include detailed closure plans.

Correction in regulatory interpretation: reg says Secretary MAY require closure plan in application or DP but not mandatory.

If Closure Plan submission is delayed, they want notice of and input into Closure Plan, but to guarantee a hearing and appeal right would be something new.

Brian: is this an agency action that would be subject to appeal?

Jerry: we will look at and clarify this with our attorneys.

Joni: they want a Closure Plan for the entire facility.

Steve: that is included and required, in addition to workplan for each unit as it is closed.

Joni: is there an opportunity for public participation as each unit comes off-line and workplan is proposed for closure?

In Hazardous Waste permit, NMED required LANL to submit 25-30 closure plans for the permit, which was available for discussion during the hearing on the permit.

Jerry: another option would be to incorporate by reference the Closure Plan in the application.

Joni: that Closure Plan wasn't in detail enough to meet requirements needed.

Steve: he wanted Closure Plan that is a living document that is changed as facility changes.

Brian: 42.G has "ponding of water" – shouldn't this be "preventing infiltration"? That way things could be grown from rainwater, but real concern is infiltration. Section 42.i why limited to 8 consecutive quarters?

Jerry: Abatement rules have this limit of 8 consecutive quarters.

Rachel: 42.i should be 8 clean quarters after achieving cleanup goals; Jerry agrees

Brian: Other places/permits have closure schedule – requirement in 42 for implementation of closure

Steve: schedule is in workplan, must be implemented after NMED approval following the schedule of the workplan

Brian: final question is financial assurance. Why isn't any required? Is this a government facility, or a private company? They feel FA should be required here.

Jerry: our attorneys reviewed and decided this is a government facility from which we could not require FA, but we will review this. We will verify this is why earlier FA requirements came out of earlier drafts.

Joni asked that we provide citations.

Gene: government owns the facility; LANS operates it. All of the major permits are issued to LANLS and DOE.

Erika: NNSA provides the funding for operations. Cleanup funded as EM at an NNSA facility, which is part of DOE.

Gene: this all came up during the RCRA hearings. The Hearing Officer found that FA wasn't necessary because it is a government facility.

Brian: Additional concern that there must be some kind of on-going inspection, maintenance, monitoring after closure.

Jerry: we don't have authority to not grant closure – we must close after 8 clean quarters. We can re-open if new information becomes available. Not a CERCLA site that can require a 5-year review.

Brian: DP-933 Condition 49-56 – please review what has been required for post-closure monitoring and reporting for a minimum of 30 years at Chevron Questa (which is also a CERCLA site). Can NMED put these post-closure requirements in LANL DP?

Jerry: we can take a look at that, although a very different site with large tailings piles

Joni: was contingency plan taken out?

Steve: contingency plan is still in there but emergency plan was taken out.

Bob: New Condition 41 Stabilization. New language on investigation and characterization activities has taken the condition from stabilization to investigation/characterization. LANL/DOE thinks these activities should be in closure conditions.

Steve: this was to tie together the closure and stabilization activities. We want to investigate whether each item has caused a problem as it comes off-line. Some items might not be able to be investigated or characterized, may not be able to determine if these has been release, and then the workplan would say that.

Bob: Please add comment language "to the extent possible given site constraints."

Groundwater Monitoring

Steve: Conditions 26, 27 and following. He's reviewed all the comments and talked to experts and others. He's added language requiring replacement of some alluvial wells at location acceptable to GWQB, and he's be happy to hear comments from Gilkyson or anyone else about where those should be.

Proposed replacement wells are red stars on map, at locations Steve approves. Original regional wells to be sampled by R-60 and R-46; he added R-14 and R-1 to add 2 additional MWs (for a total of 4 MWs in regional), which assures that 2-3 of those are hydrologically DG. Intermed well is MC-6, which is about where the intermed aquifer exists.

Rachel: those 4 regional wells are existing?

Steve: Yes. Our intent is to prevent any releases from ever getting to any aquifer. Vadose zone monitoring at SET before goes to GW. This permit is intended to find releases before they get to aquifer. Additional language added to allow LANL to propose an alternate sampling method, because of problems with the wells (which prevent following GWQB Guidelines that require purging of 3 wellbore volumes). LANL is currently under Consent Order, has submitted about 10 different sampling protocols and SOPs.

Jerry: DG is a relative term, and believes that this permit covers alluvium with described wells, intermediate is covered, regional is what is there. If anything ever is detected, will expand. We are banking on early detection and prevention. Is there anything specifically with Building 1 that CCW would propose?

Joni: They will have to get back to us. Very concerned about addition of existing regional wells, because National Academy of Sciences has said these wells are not appropriate for monitoring

Jerry: NAS said must look at each constituent and possible masking of well results.

Steve: He reviewed the NAS report, has talked to experts and to LANL/DOE, and recognizes the potential for some masking but all MWs have problems. Doesn't think new wells could necessarily have fewer problems. New alluvial wells will have to be installed in compliance with Guidelines.

Danny: these wells will be drilled auger, and LANL will allow CCW to be there and observe when they are installed. Might even hand-drill or install without a rig, if topographic constraints. The 2 MWs that exist were adequate and showed stuff when discharge was occurring. LANL has every reason to believe that the locations are geologically DG, and are hydrologically adequate to detect anything.

Joni: in the past things have been promised for observation, so how will we guarantee?

Steve: he will observe and Gilkyson can come with him

Danny: probably not appropriate to put in a permit condition but will make observation possible

Joni: they need some kind of written agreement that will allow Gilkyson and some women from San Ildefonso to be present when well is installed

Allison: they can commit to that in writing

Bob: Condition 27, comment about 60 days or some other schedule for installation of MW. What would that full timetable look like? All the requirements can't fit in that time period.

Steve: LANL will submit a workplan and schedule for installation of MWs.

Joni and Rachel: will the workplan and schedule be available for review, will it be posted, will they be able to have input? Appeal?

Danny: Submittal of workplan triggered by issuance of DP.

Jerry: we will add time trigger language to DP Condition 27: 60 days after issuance of DP LANL will submit workplan for replacement of alluvial MWs.

Danny: MCO-7 would also be replaced and moved closer to the outfall for earlier detection. **[Is this in the DP?]** Since effluent discharge all but stopped 3-4 years ago, the alluvial system in Mortandad Canyon is getting dramatically drier, and MWs are beginning to dry up.

Joni: where was geol barrier installed?

Danny & Bob: just up-canyon from MCO-7

Joni: additional discharge?

Danny: not aware of any, only discharge was historic from Outfall 051

Joni: why didn't LANL put moisture monitoring in before construction?

Eric: installed as double-liner with leak detection system.

Jerry: we had some concerns about installation, so proposed additional moisture monitoring of vadose zone.

Joni: how did LANL have authority to install without a permit?

Bob: they haven't used it because the permit hasn't been issued.

JP: many permit applicants construct things at risk before permit issued, and NMED has made people change or remove things constructed prior to approval.

Jerry to Joni: NMED needs to provide statement from AQB that SET would not be regulated as an air source

Marian: hard to trust because things were not put in local Reading Room for people that don't use electronic processes. LANL made no attempt to go to Northern College to be a special place for hard-copy documents. This has left bad feelings and affected the trust issue.

Gene: LANL was concerned that documents could be taken, would be a violation of permit, etc.

Marian: this facility has operated for more than 70 years. She thinks LANL should be able to admit mistakes and replace wells. This is not a safe place to put this type of facility, given fires, volcano, and there will be more things happening. She doesn't understand why emergency preparedness provisions were taken out. We have no control over seismic events and many natural things, so if LANL is going to continue to operate in a not-safe place, then there better be emergency

plans in place in case something happens. This is a sacred place because of how the Creator made it.

Brian: in terms of the public participation piece – we are seeing what is happening at LANL, after many promises that things that are happening now were never going to happen. There are going to be more mistakes, spills, pollution, and we have to have FA and public participation in place to address what could really happen up there. For whatever reasons, there was a huge mistake made up there, and we don't know what the consequences are – we can't just say this will never happen again.

Joni: the State has a responsibility to ensure that every mechanism is put in here to protect human health and the environment. **FA, emergency plan, and public involvement and notice, closure plan now provisions** must be put back in here. Those notice requirements are a benefit for everyone. They are not sitting in the same place as before in negotiating this permit, and they do not have the trust if they ever had it, because they see that mistakes were made and basic safety provisions were eroded. They are concerned about going to public hearing on this, and need to see movement by LANL and by NMED on this permit.

They went on a tour 15 years ago, and are not willing to wait 5 years for changes in a permit.

Steve: could we put the emergency plan back in?

Bob: they have a plan, and an emergency center. There were some elements of the Emergency Plan that they didn't agree with.

Joni: in RCRA permit, LANL decided that it would allow the Fire Dept. to tour the facility, which was positive, and led to a better relationship for emergency preparedness with LANL and the Fire Dept. regarding PF-4.

Steve: if we can get off this point by LANL agreeing to put the Emergency Plan requirements back in the DP. **Talk to Bob and review prior language to see if can be salvaged.**

JP: we will talk to attorneys about FA.

Jerry: let's put issues to bed, doesn't think we are that far apart, can re-group and get back to them on these 3 points. **We will have internal discussion on the Public Involvement question.**

Bob: proposal that we re-structure GW monitoring section, to have a stand-alone paragraph on new wells to be constructed according to Guidelines via workplan, existing wells separate. Right now it's not clear what things apply to which wells.

Rachel: this would also apply to any additional wells added in the future.

Steve: this seems reasonable.

Joni: question about in-house labs or independent labs.

Steve: confirmation sampling done by indep labs with appropriate certification.

Bob: all compliance samples have been analyzed by NLAP labs. Discharges are done by internal labs because of time constraints.

Steve: concern about discharge to SET and MES based only on internal lab results. Compliance samples of discharge going out, go to independent labs. **Compare requirements for discharges to SET and MES, and to Outfall 051.**
Jerry: we'll review this internally
Bob: GW samples include field parameters are posted on INTELLUS website, but question requirement to add to Condition 27 list of physical reporting conditions. These aren't typical DP requirements.
Steve and Jerry: these are included in other permits. Are required to verify conditions in which samples are taken.
Bob: just one more datapoint they have to provide.
Beata: evaporation tanks – are they to prevent spills or overfills?
Jerry: we require 2 feet of freeboard in all our permits.
Steve: he reviewed all this and is satisfied SET can use vac truck to remove if more than 2 feet of rainfall.

Joni: Condition 25 – why 120 days to submit workplan/proposal?
Steve: probably conditional on issuance of permit – they don't want to put together the workplan until the permit is issued.
Chris: travel time to moisture mon system is 1 year, so even if system were installed when permit issued, it wouldn't detect anything for a year, to put 120 days into perspective.
Joni: definition on 2ndary containment – why was 24 hours time period removed?
Bob: spills and releases sometimes must be investigated, characterized and fixed before material is removed.
Chris: there are 4 miles of piping, so if there is an alarm, they need more than 24 hours to investigate the entire collection system, some of which are in canyons which they can't access if a lot of snow is present. Don't want to be in violation because can't get to something in 24 hours.
Steve: no EPA definitions of 2nd containment have a time period. This seems a good, robust definition of 2nd containment.
Joni: why definition of PCB taken out?
Steve: no performance std for PCB in permit?
Joni: Joint and several liability – it's good public policy to state this. She knows LANL has objected, but she thinks it should be in the beginning.
Bob: it's in Condition 55.
Joni: in description of TRU facility in V.D – the only thing from RLWTF that goes to WIPP is sludge.
Chris: **it would be ok to say that TRU waste from treat water (sludge) shall be disposed of at an off-site facility permitted to receive TRU waste.**
Joni: Why wasn't SET sealed before construction (see definition)?
Eric: it was sealed, but maybe not water-tight seal. **He'll provide this info to group.**
Joni: why is signage requirement unacceptable?

Chris: water meets GW standards as discharged, so what is the hazard? They can't limit access (hikers, workers).
Joni: 8.a – why does LANL need 540 days to demonstrate water-tightness?
Chris: every 18 months. There are only 2 items: discharge pipe to canyon, discharge piping. SET pipeline is treated effluent conveyance lines. Canyon pipeline is old, are prepared to do testing – it's treated water.
Steve: we'll look at this at this timing.
Joni: 50 gallons/mile std removed, and why other deletions to Condition 8?
Steve: he couldn't find any std for exfiltration language and couldn't support std, so removed it. We modified to Joni's language to "as low as reasonably attainable." Steve couldn't find any number or standard, so deferred back to language proposed by Joni.
Bob: they also want a number, too. CPB has a number for sewer lines: leakage 200 gallons per inch of pipe diameter, minimum positive head of 2 feet. **We'll look at this and see if sewer line std for treated effluent is ok (given only internal sampling for release).**
Rachel: any testing at the Outfall itself? This should be a condition of the permit once per permit period to make sure nothing is being mobilized.
Mike: about 4 years ago, part of NPDES limits.

JP: need to re-schedule. Thursday 10/15 9:30 (JP: try to re-schedule permit mtg w/ Trais)

: 12795

10/15/14 NMED - CCW - LANL/CCW Meeting

Jennifer Pruett	GWQB	Jennifer.Pruett@state.nm.us
Chris DelSignore	RLW	JCDS@LANL.GOV
Mike SaladeN	LANS	SaladeN@lanl.gov
Allison Dorneis	LANS	adorneis@lanl.gov
GENE TURNER	NNSA	gene.turner@nnsa.doe.gov
~~BOB BEERS~~	LANS	~~Bbeers~~@lanl.gov
Tony Grieggs	LANS	grieggst@lanl.gov
JONI ARENDS	CCNS	jarends@nuclearactive.c
Steven Huddleson	GWQB	Steven.Huddleson@state.nm
JERRY SCHOEPPNER	"	jerry.schoeppner e ...

DP-1132 LANL/CCW Meeting October 15, 2014

Start: 9:30 a.m.

Introductions:

JJP
Jerry Schoeppner
Steve Huddleson
Chris Del Signore
Mike Saladen LANS
Alison Dorries, LANS
Gene Turner DOE
Bob Beers LANS
Tony Griggs, LANS/DOE
Joni Arends CCNS
Rachel Conn (by telephone)

Discussion Topics

Additional discussion items: CCW

Joni: Condition 10.b – what criteria for evidence of deterioration?
Steve: gave some examples, holes/cracks/breaks.
JP: we want this to be broad, to include everything.

Joni: Condition 13.c LANL wanted to include table of soil screening levels in its entirety.
Steve: He wanted to keep separate so if table changed, then LANL would have to follow whatever is current document.

Joni: Condition 16 & 17 flow meters. Why will it take 180 days to install? She assumes they are already installed or should already be installed. How could operations begin without flow meters?
Steve: there are some flow meters.
Chris: 2 lines share a flow meter – discharges to outfall or solar evap ponds in same line, then split underground. LANL wanted same flow meter with log showing time to each. They will have to install additional piping and 2 new aboveground flow meters. Design of flow meters is almost complete, will be located inside building with treatment tanks.
Steve: how far from operation are they now?
Chris: 4-6 months. Things move slowly at LANL.
Joni: If permit effective December 1, they will need time to install the flow meters. If SET use is started before flow meter is in, what the?
Chris: later language in 16 about alternate method for alternate method. Initial calibration can happen when meter is installed, so shortening time is ok.

Steve: we could make them do it in 4 months. JP: or we could say can't use SET until flow meter is in.

Joni: Condition 30 settled solids removal – is it typical for this kind of workplan, without specifics in the plan.

Joni: CCNS's comments are conditional on response to FOIA response on air emissions from LANL/DOE; filed day before Thanksgiving last year – didn't receive response as promised by end of May. Want calculations of rad air waste, and whether EPA reviewed it.

Jerry: we don't have authority for AQ issues, wouldn't hold up this permit. This would be an AQB issue, and challenge would be for an AQB permit, not GW DP.

Joni: this is an issue in the GW DP, and whether the conditions are protective enough. Joni will send FOIA out to everyone, as Chris hadn't seen it.

Additional discussion items: LANL/DOE

Bob: passed out 2-page Closure Plan; Joni will send out to CCW

Bob: 20 additional comments.

Bob: First, LANL/DOE is concerned that this is 5th draft, lots of negotiations. LANL/DOE did not expect to see new additional requirements from GWQB, only thought it would include responses to LANL/DOE comments and CCW comments. They were greatly dismayed at new changes and additions, which they thought were out of the blue. LANL/DOE thought with 4 prior draft permits, all of GWQB's prior requirements would have already been addressed.

p. 6 2nd containment definition came right out of RCRA – what does primary unit mean? What does completely surround mean? They can't meet the requirement for double-walled tank. The SET is not completely surrounded, neither is WMRM. **Need changing.**

p. 13 Condition 3. **Want to strike**: "intended function, design or capacity for any of the system, units or components of the Facility's collection, treatment or disposal system"

New language: add NMED will inform **"in writing"**

p. 14 Condition 3.k and m. NMED approval in advance is already in there, is redundant, **remove "as approved in advance by NMED"**

p. 15 Condition 4 same comment as before; request for even an alternative list of design changes, change orders, is onerous, impractical – hundreds of field changes are made, enormous list – do we really want to know all these? **Re-word to only include significant changes**

p. 16 Condition 7 added "an untreated" with comment that in conflict with language of Condition 8.

Steve: line to SET and line to outfall which do not have 2nd containmt are exempt from 2nd containment, and there need to be water tightness tested.

Joni doesn't understand how the lab could build a pipeline without 2nd contnmt

Bob: p. 17 Condition 8 why was leakage rate removed? ALARA is unacceptable.

Steve: removed because CCW objected. Propose something else. Sewer line leakage number GPD (or whatever) is ok. Will CCW be ok with this?

Joni: she will have to discuss with others

Chris: number doesn't mean that much because it's treated water

Bob: ok to leave ALARA for Outfall line;
Joni will check

p. 18 Settled solids: average should appear in condition as well as contingency

p. 19 new language: "on a monthly basis" – how to you inspect visually?
Steve: this means visual portion above the water line.**We can clarify this language**

p. 21 they want to attach Table A-1 (guidance document)

p. 22 Somehow their request for extending limits til new system was dropped

p. 25 Condition 18 standard for calibration of flow meters. EPA permit has = or – 10 %. Robert's testimony in Dairy says 10%, EPA says 10%. Why changed to 5%.

p. 27 Waste tracking. An example of language that just appeared. Language "or from" was added and is a substantial change. This is outside our jurisdiction. This is a completely new item that concerns them and wasn't in any prior draft permit over the last 20 months. Bob says they are already doing this.
In "b" during what time period the wastestream was conveyed: LANL commits to tracking time period for approval to convey. Chris says they can't do this; approval form includes time period and expected volume, expected characteristics, but then the waste streams are commingled at the plant and LANL doesn't know what sources were sent, what volumes came, etc.
Chris: TRU waste is closely monitored and measured, but not for low-level.

p. 30 GW mon – 60 days to install new MWs? What does this mean? Workplan required?
Steve: within 60 days of effective date, submit workplan for design, installation,etc.

p. 33 Condition 27.j addition of physical parameters (Bob says these are available on Intellus)

p. 33 Condition 29.c add "in accordance with"
p. 34 9) top "instated" = "instituted"

p. 35 Cond 31 120 days – add "at least 120 days prior" – changing trigger for removal
p. 43 Condition 41 Cessation. They want to retain the 75,000 tank as a sump for containment of emergency releases. They want to bring this back up for us to consider – still on the table. No longer used for influent collection.
Joni wants slant well under there to characterize. They are concerned with continued use of this.

Chris: they did do a 5-days leak test on it. If NMED says take it out, they would do this. They would be ok with DP statement that it would be empty, immediate notification to NMED is any liquid emplaced.

p. 43 Cond 42 new language added that substantially changes: stabilization and characterization, also new condition language at the bottom. They oppose this addition which wasn't discussed before.

Chris: this doesn't make sense because if removing an ionization treatment system, why then need for characterization?

Joni: they were concerned that no slant wells under the facility to determine if there had been releases.

CCW Groundwater response

Replacement of MCOs – wants temp casing to protect borehole, that there is a well casing and screen, sand surrounding; very concerned about integrity of well during drilling. Wants core samples as they come out.

Jerry: Is Bob familiar with OSE guidelines for installation of MWs? That's what we use.

Steve will talk to Bob.

Joni: With respect to MCO wells, they want requirement that original wells be plugged & abandoned.

Bob: LANL is ok with that.

Joni: MCO i6: Bob suggests retaining and doing 8 consecutive quarterly samples, compare to new well results, then plug and abandon, because this is an important well and the only intermediate well.

Prior big issues:

Financial assurance: NMED needs to do more research; no one could come up with an example of FA being required at a federal facility

Public notice and appeal right of closure plan:

-LANL could agree to put more detailed closure

Emergency Plan: LANL doesn't want to put this back into the DP; feels this is beyond GW authority, not required in any other DP

Joni: this is a deal-breaker for CCW

Joni: use of the electronic public reading room; no compromise and want all documents listed initially in DP, because facility has been operating for 70 years, LANL has not followed SOPs; model used for WIPP, LANL and Sandia Haz Waste permits; this makes it so much easier for public to find documentation

LANL: not willing to compromise, will only post limited list in separate section

: 12801