APPENDIX A

Del Oro Dairy Pump and Reuse System Performance Assessment

APPENDIX A
PUMP AND REUSE SYSTEM PERFORMANCE ASSESSMENT
DEL ORO DAIRY, ANTHONY, NEW MEXICO
JANUARY 2025 – APRIL 2025

This quarterly performance assessment of the Del Oro Pump and Reuse System has been prepared in compliance with the Stage 2 Abatement Plan (S2AP) Modification Performance Plan (EA Engineering, Science, and Technology, Inc., PBC [EA] 2022). Note that references are included in the main document text.

The performance assessment evaluates pumping rates, total volume pumped, mass removed, and plume capture by the five extraction wells installed in the perched aquifer along the downgradient perimeter of the Del Oro Dairy property. A site background summary is included in the main report.

Pump and Reuse System

The pump and reuse system is shown in plan view on Figure A-1. The system consists of:

- Five, 4-inch diameter groundwater extraction wells completed in the perched aquifer (EW-1 through EW-5). The submerged screens in each well were installed at 14 to 15 feet below the water table, representing the perched aquifer thickness (water table to confining clay).

- Four submersible solar groundwater pumps supplied by Rural Pumping Systems, complete with controllers and 4 x 100-watt (400-watt total) solar panels installed at the well heads of EW-1, EW-2, EW-4, and EW-5. The pump at EW-3 was removed after the pump repeatedly malfunctioned due to the low permeability of the surrounding aquifer.

- Well head completions consisting of valves, flow meters, sample ports, and steel pipe fence and bollards to isolate from cattle.

- Main conveyance line consisting of 1.5-inch diameter high density polyethylene (HDPE) pipe connecting the extraction wells to HDPE storage tanks located at the milking parlor.

- Two 6,000 HDPE storage tanks plumbed in parallel.

- Transfer pump and pressure tank for delivery to the milking parlor.

A process flow diagram of the system is provided as Drawing P-1.

System Background

Wells were installed and sampled in October 2022. Startup testing for the pumping system began in late December 2022 following pump and solar panel installation. After several iterations of trouble-shooting, all pumps were pumping at capacity by April 2023 except for extraction well EW-3. After the pump in this well repeated malfunctioned due to low permeability of the aquifer, it was removed. The pump was placed in the higher yielding EW-1 when its pump failed in April 2024. The pump at EW-3 has not been operating since February 2023. As a result, samples have not been collected since that time and EW-3 is not discussed in the quarterly performance assessment.

Permeability at well EW-3 is an order of magnitude less than the other wells. The well produced a maximum of 0.05 gallons per minute. Because of the low permeability, the well has limited potential to contribute to nitrate mass removal and cleanup time of the system. The omission of EW-3 from the well network is not expected to negatively impact system efficacy. Del Oro Dairy performs weekly meter reading and relays data to EA for record keeping and reporting.

The meter in EW-1 stopped functioning at the end of December 2024. It was replaced in late February 2025 and is now functioning properly.

Quarterly Performance Assessment

Performance assessment will be used to evaluate average pumping rates, mass removal of nitrate, and plume capture by the five extraction wells. The performance assessment consists of three components: 1) tracking and reporting of extracted groundwater volume, 2) collection of groundwater samples from extraction wells and analysis of mass removal, and 3) capture analysis.

Extracted Groundwater Volume

Totalizing flow meters measure the volume of extracted groundwater from each extraction well as reported in Table A1. The meter at EW-1 was not functioning properly at the beginning of this quarter; as a result, meter readings and average flow rate are missing for those dates. The aggregate volume of water pumped from operating wells is also measured at the storage tanks with a totalizing meter located just before outfall into the storage tanks.

Weekly liquid depth measurements for the Del Oro lagoon cells (ultimate destination of extraction water) are provided in Attachment 1. Stable and/or low liquid levels in the lagoon cells indicate that extracted groundwater that is used to wash down the milking parlor and then is transported to the lagoons for disposal does not exceed the capacity of the lagoons.

Groundwater Sampling Results and Trends

Table A2 summarizes groundwater analytical results from the extraction wells. The highest respective nitrate, chloride, and TDS concentrations of 140 milligrams per liter (mg/L), 970 mg/L and 3,500 mg/L were detected in extraction well EW-2. Nitrate concentrations in EW-1 generally fluctuate but showed a large magnitude decrease relative to last quarter (180 mg/L to 20 mg/L). Nitrate in EW-2 is lower than initial concentrations but is at the highest concentration since the first sampling event. Nitrate generally fluctuates in EW-4 but appears to be generally decreasing. The nitrate concentration in well EW-5 has been steady since 2023. Chloride fluctuates in EW-1 but is notably lower than last quarter (1,100 mg/L to 520 mg/L). Chloride in EW-2 has increased relative to last quarter and is the highest concentration detected this quarter. Chloride in EW-4 and EW-5 has increased since startup. Since system startup, TDS concentrations initially decreased but then increased in EW-1 and EW-2; however, TDS concentrations are generally lower than those at startup. TDS in EW-1 is notably lower than in previous sampling events. TDS fluctuates in EW-4, but concentrations appear to have an increasing trend. TDS concentrations at EW-5 are relatively steady. Nitrate, chloride, and TDS concentration trends for downgradient and key monitoring wells are provided in Attachment 3.

Nitrate Mass Removal

Groundwater samples are collected from each extraction well on a quarterly basis. Analytical results for extraction well samples are provided in Table A2 and laboratory reports are provided in Attachment 2.

Nitrate mass removal rates are the product of flow rate and chemical concentrations, which yield total mass removed per quarter. The nitrate mass removed this quarter was 86.7 pounds. Cumulative mass removed since startup is 2,132 pounds. A summary of nitrate mass removal is provided in Table A3.

Capture Analysis

Capture analysis is a function of flow rate, permeability (hydraulic conductivity), and hydraulic gradient. Flow rates are measured weekly via flow meters, and hydraulic gradient is calculated from quarterly water level measurements. Hydraulic conductivity for the perched aquifer was estimated based on observed grain size and typical values. For fine to medium sand, 10^{-2} to 10^{-3} centimeters per second (cm/s) is typical, and this range equates to 27 to 2.7 feet per day (ft/day). Since the sand was logged as "poorly graded fine sand," permeability was assigned as 10 ft/day in higher yielding wells EW-1, EW-2, EW-4, and EW-5, and 1 ft/day for low yielding well EW-3. The capture width for each well is calculated based on these permeabilities and measured flow rates and gradient. Capture widths for EW-1, EW-2, EW-4, and EW-5 were 83 feet (ft), 96 ft, 190 ft, and 80 ft, respectively. A summary of capture analysis is provided in Table A4.

Attachments:
- Figure A-1 – Extraction System Layout
- Drawing P-1 – Process Flow Diagram
- Table A1 – Pumping Volumes and Rates
- Table A2 – Del Oro Dairy Extraction Well Analytical Results
- Table A3 – Summary of Nitrate Mass Removal
- Table A4 – Capture Analysis for Pumping Wells
- Attachment 1 – Weekly Liquid Depth Measurements for Lagoons
- Attachment 2 – Analytical Laboratory Reports
- Attachment 3 – Concentration Trends for Del Oro Extraction Wells and Abatement Plan Monitoring Wells in the Perched Aquifer

FIGURE A-1 and DRAWING P-1

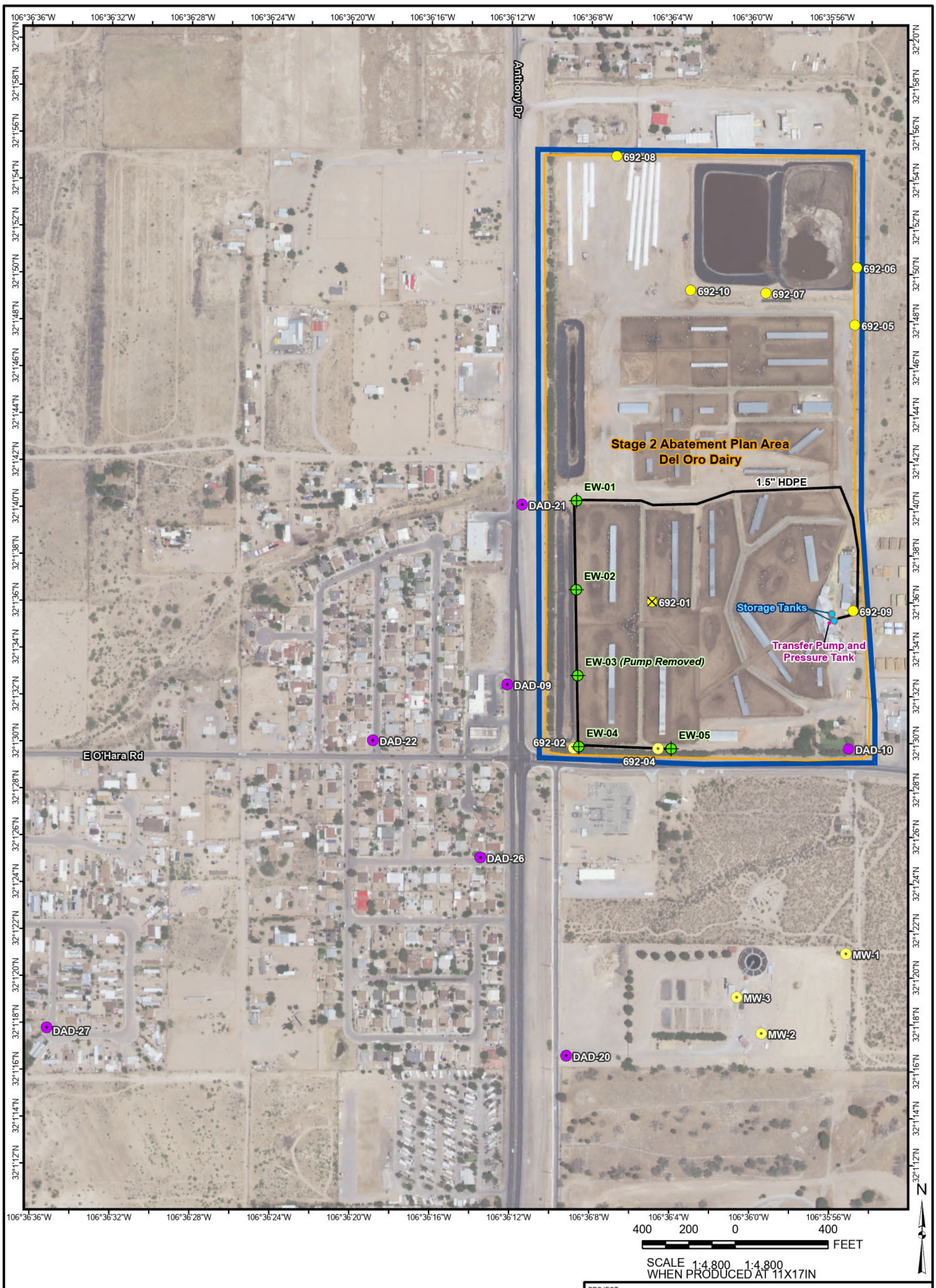

SCALE 1:4,800 1:4,800
WHEN PRODUCED AT 11X17IN

LEGEND:

- Extraction Well
- Conveyance Line

Perched Aquifer Monitoring Well

- Abatement Plan Monitoring Well
- Discharge Plan Monitoring Well
- Discharge Plan Monitoring Well — Discharge Plan Monitoring Well - Plugged and Abandoned

Regional Aquifer Monitoring Well

- Abatement Plan Monitoring Well
- Discharge Plan Monitoring Well
- Land Owned by Dairies
- Stage 2 Abatement Plan Area

REFERENCES

Aerial Photography: NAIP, 2011
PLSS: BLM, 2000
Projection: State Plane NAD 83 New Mexico Central (feet)

PROJECT

DOÑA ANA DAIRIES
MESQUITE, NEW MEXICO

TITLE

EXTRACTION SYSTEM LAYOUT
DEL ORO DAIRY

PROJECT No. 14641-13		TASK: 2.1	
DESIGN	NA	SCALE AS SHOWN	REV 0
GIS	RM	Figure A-1	
CHECK			
REVIEW			

2025-02-17 P:\gis2\Commercial\Dona Ana Dairies - 21464114\03 November 2024\Projects\DonaAnaQuarterly_202411.aprx EA-Dallas rmullen

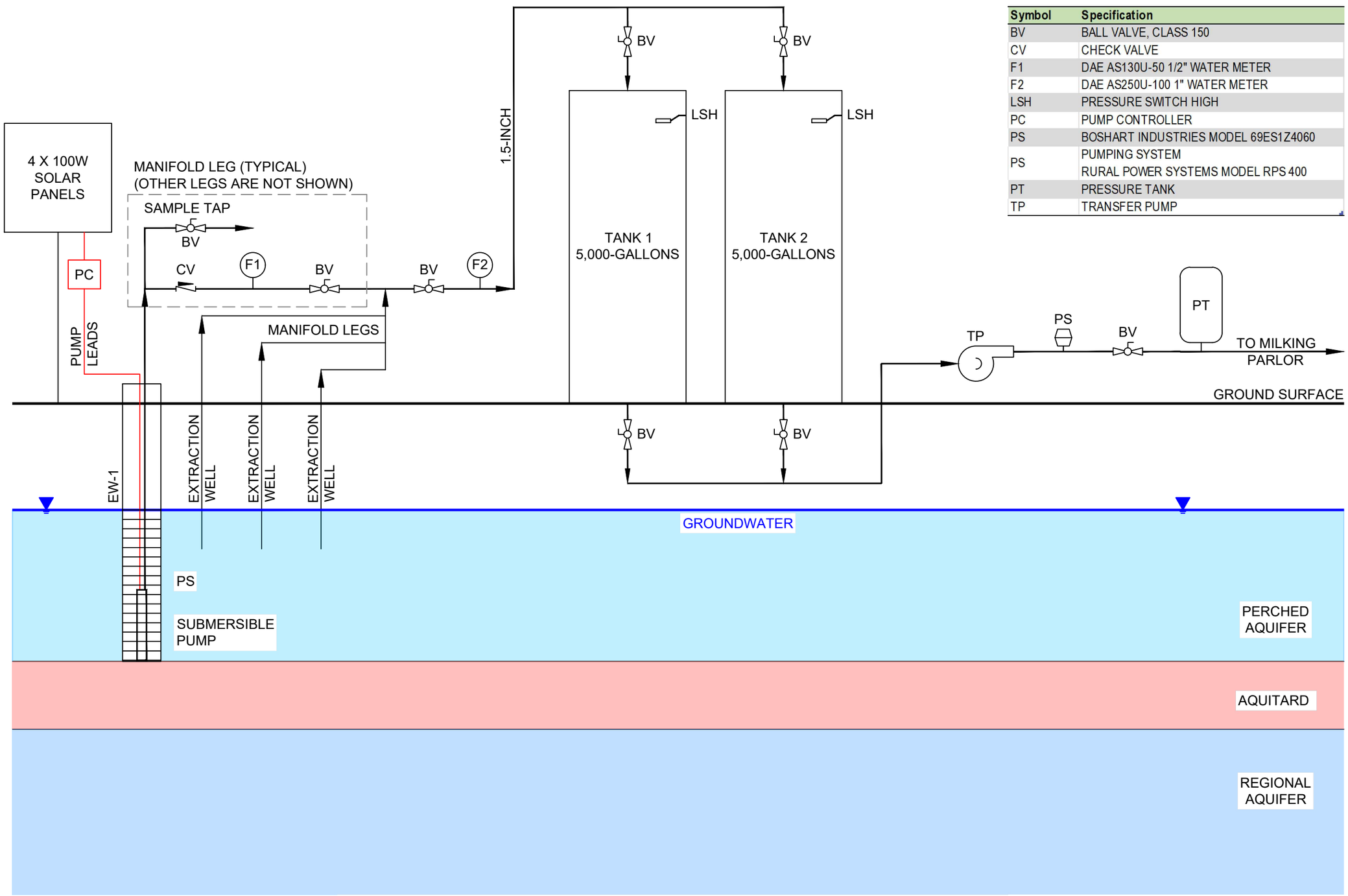

Symbol	Specification
BV	BALL VALVE, CLASS 150
CV	CHECK VALVE
F1	DAE AS130U-50 1/2" WATER METER
F2	DAE AS250U-100 1" WATER METER
LSH	PRESSURE SWITCH HIGH
PC	PUMP CONTROLLER
PS	BOSHART INDUSTRIES MODEL 69ES1Z4060
PS	PUMPING SYSTEM RURAL POWER SYSTEMS MODEL RPS 400
PT	PRESSURE TANK
TP	TRANSFER PUMP

REV	DATE	DRAWN	CHECKED	REMARKS
0	2/10/23	2/10/23	JS	

REVISIONS

EA ENGINEERING, SCIENCE, AND TECHNOLOGY, INC.
320 GOLD AVENUE, SW SUITE 1300
ALBUQUERQUE, NM, 87102
505-224-9013, HTTPS://EAEST.COM

DESIGNED BY: JS
DRAWN BY: VM
CHECKED BY: JS

DEL ORO DAIRY, ANTHONY, NEW MEXICO
STAGE 2 ABATEMENT PLAN MODIFICATION

PROCESS FLOW DIAGRAM

PROJECT NUMBER: 1464110-01

DRAWING NO.: P-1

TABLES
(Provided Electronically via CD)

TABLE A1. PUMPING VOLUMES AND RATES
DEL ORO DAIRY, ANTHONY, NEW MEXICO

Date	Time	Elapsed Time (min)	EW-1		EW-2		EW-3		EW-4		EW-5		Tank	
			Meter Reading[1]	Q_{avg}[2]	Meter Reading[1]	Q_{avg}[2]	Meter Reading[1,3]	Q_{avg}[2]	Meter Reading[1]	Q_{avg}[2]	Meter Reading[1]	Q_{avg}[2]	Meter Reading[1]	Q_{avg}[2]
12/22/2022	12:45:00 PM	--	13,504	--	13,740	--	6,750	--	6,203	--	12,120	--	31,259	--
1/3/2023	7:30:00 AM	16,980	21,885	0.49	24,744	0.65	0.0	0.0	7,280	0.06	16,337	0.25	54,046	1.34
1/9/2023	7:30:00 AM	8,640	27,541	0.65	33,425	1.00	0.0	0.0	8,274	0.12	21,870	0.64	73,388	2.24
1/13/2023	10:00:00 AM	5,910	31,657	0.70	40,030	1.12	0.0	0.0	8,792	0.09	25,957	0.69	87,851	2.45
1/16/2023	2:00:00 PM	4,560	33,565	0.42	42,838	0.62	0.0	0.0	9,047	0.06	27,529	0.34	94,214	1.40
1/23/2023	11:00:00 AM	9,900	38,695	0.52	51,625	0.89	0.0	0.0	9,470	0.04	32,586	0.51	116,170	2.22
1/30/2023	9:00:00 AM	9,960	40,325	0.16	63,627	1.21	0.0	0.0	9,471	0.00	38,804	0.62	138,126	2.20
2/6/2023	9:30:00 AM	10,110	41,955	0.16	75,629	1.19	0.0	0.0	9,471	0.00	43,822	0.50	160,082	2.17
2/13/2023	9:00:00 AM	10,050	43,585	0.16	87,631	1.19	0.0	0.0	9,471	0.00	49,440	0.56	182,038	2.18
2/20/2023	2:00:00 PM	10,380	44,562	0.09	95,584	0.77	0.0	0.0	9,645	0.02	49,841	0.04	193,391	1.09
2/27/2023	11:25:00 AM	9,925	46,355	0.18	105,471	1.00	1,000	0.0	9,846	0.02	49,857	0.00	206,255	1.30
3/6/2023	11:30:00 AM	10,085	48,796	0.24	118,557	1.30	143	-0.08	10,002	0.02	53,215	0.33	223,524	1.71
3/13/2023	10:00:00 AM	9,990	50,472	0.17	129,962	1.14	143	0.0	10,020	0.00	53,300	0.01	240,794	1.73
3/20/2023	9:45:00 AM	10,065	50,472	0.00	141,036	1.10	143	0.0	16,435	0.64	58,117	0.48	264,263	2.33
3/27/2023	9:00:00 AM	10,035	50,472	0.00	152,111	1.10	143	0.0	22,850	0.64	62,929	0.48	287,733	2.34
4/3/2023	10:30:00 AM	10,170	50,472	0.00	165,216	1.29	689	0.05	31,638	0.86	64,978	0.20	316,928	2.87
4/10/2023	10:00:00 AM	10,050	58,791	0.83	177,767	1.25	1,254	0.06	39,593	0.79	73,732	0.87	351,146	3.40
4/17/2023	9:00:00 AM	10,020	68,627	0.98	190,104	1.23	1,750	0.05	47,154	0.75	80,639	0.69	386,386	3.52
4/24/2023	9:00:00 AM	10,080	72,167	0.35	202,937	1.27	1,983	0.02	55,452	0.82	82,848	0.22	422,932	3.63
5/1/2023	10:30:00 AM	10,170	19,889	-5.14	215,777	1.26	2,143	0.02	63,694	0.81	86,694	0.38	461,244	3.77
5/8/2023	10:30:00 AM	10,080	31,596	1.16	227,871	1.20	2,321	0.02	70,149	0.64	88,583	0.19	494,210	3.27
5/15/2023	10:00:00 AM	10,050	43,484	1.18	239,586	1.17	2,445	0.01	76,270	0.61	89,708	0.11	525,635	3.13
5/22/2023	10:45:00 AM	10,125	55,372	1.17	251,186	1.15	2,566	0.01	82,391	0.60	90,832	0.11	557,060	3.10
5/29/2023	9:30:00 AM	10,005	67,341	1.20	262,562	1.14	2,587	0.00	86,327	0.39	90,992	0.02	584,871	2.78
6/5/2023	10:00:00 AM	10,110	80,923	1.34	275,163	1.25	2,587	0.00	90,312	0.39	90,992	0.00	620,587	3.53
6/12/2023	10:00:00 AM	10,080	94,505	1.35	287,765	1.25	2,587	0.00	94,307	0.40	90,992	0.00	656,304	3.54
6/19/2023	10:30:00 AM	10,110	108,529	1.39	300,599	1.27	2,587	0.00	97,848	0.35	91,000	0.00	677,677	2.11
6/26/2023	10:00:00 AM	10,050	122,469	1.39	313,269	1.26	2,682	0.01	100,849	0.30	95,708	0.47	711,332	3.35
7/3/2023	4:15:00 PM	10,455	136,750	1.37	325,789	1.20	2,762	0.01	103,476	0.25	100,664	0.47	747,124	3.42
7/10/2023	11:00:00 AM	9,765	149,015	1.26	338,601	1.31	2,763	0.00	106,104	0.27	105,013	0.45	779,317	3.30
7/17/2023	11:15:00 AM	10,095	161,422	1.23	351,058	1.23	--	--	108,733	0.26	108,512	0.35	810,775	3.12
7/24/2023	10:30:00 AM	10,035	173,023	1.16	362,424	1.13	--	--	110,821	0.21	110,867	0.23	838,842	2.80
7/31/2023	9:00:00 AM	9,990	185,966	1.30	375,764	1.34	--	--	112,871	0.21	113,252	0.24	871,594	3.28
8/7/2023	9:30:00 AM	10,110	196,377	1.03	387,480	1.16	--	--	114,375	0.15	115,067	0.18	898,842	2.70
8/14/2023	9:00:00 AM	10,050	206,788	1.04	399,197	1.17	--	--	115,879	0.15	116,883	0.18	924,510	2.55
8/21/2023	10:00:00 AM	10,140	218,382	1.14	410,496	1.11	--	--	117,872	0.20	118,646	0.17	951,852	2.70
8/28/2023	11:00:00 AM	10,140	229,976	1.14	421,795	1.11	--	--	119,864	0.20	120,408	0.17	979,194	2.70
9/4/2023	11:00:00 AM	10,080	238,915	0.89	431,113	0.92	--	--	121,161	0.13	121,510	0.11	1,000,406	2.10
9/11/2023	11:00:00 AM	10,080	248,779	0.98	441,603	1.04	--	--	122,593	0.14	122,716	0.12	1,024,830	2.42
9/18/2023	11:00:00 AM	10,080	256,429	0.76	449,915	0.82	--	--	123,623	0.10	123,424	0.07	1,044,326	1.93
9/25/2023	10:00:00 AM	10,020	263,900	0.75	459,188	0.93	--	--	124,135	0.05	123,686	0.03	1,061,955	1.76
10/2/2023	11:00:00 AM	10,140	272,371	0.84	468,462	0.91	--	--	124,648	0.05	123,949	0.03	1,079,584	1.74
10/9/2023	10:45:00 AM	10,065	277,842	0.54	477,735	0.92	--	--	125,160	0.05	124,212	0.03	1,097,210	1.75
10/16/2023	10:30:00 AM	10,065	286,313	0.84	487,009	0.92	--	--	125,623	0.05	124,476	0.03	1,114,830	1.75
10/23/2023	10:00:00 AM	10,050	293,785	0.74	496,283	0.92	--	--	126,185	0.06	124,738	0.03	1,132,475	1.76
10/30/2023	10:00:00 AM	10,080	299,137	0.53	504,413	0.81	--	--	126,250	0.01	124,835	0.01	1,146,027	1.34
11/6/2023	11:00:00 AM	10,140	304,490	0.53	511,972	0.75	--	--	126,315	0.01	124,835	0.00	1,159,579	1.34
11/13/2023	11:00:00 AM	10,080	307,764	0.32	517,341	0.53	--	--	126,328	0.00	124,838	0.00	1,167,402	0.78
11/20/2023	11:00:00 AM	10,080	310,212	0.24	521,109	0.37	--	--	126,355	0.00	124,846	0.00	1,175,301	0.78
11/27/2023	2:15:00 PM	10,275	313,486	0.32	526,479	0.52	--	--	126,367	0.00	124,849	0.00	1,183,162	0.77
12/4/2023	2:00:00 PM	10,065	316,812	0.33	531,054	0.45	--	--	126,375	0.00	124,849	0.00	1,190,950	0.77
12/11/2023	2:20:00 PM	10,100	320,288	0.34	535,631	0.45	--	--	126,382	0.00	126,382	0.00	1,198,740	0.77
12/18/2023	2:20:00 PM	10,080	323,602	0.33	539,701	0.45	--	--	126,382	0.00	126,382	0.00	1,206,530	0.77
12/25/2018	2:10:00 PM	10,070	326,173	0.26	542,610	0.45	--	--	126,382	0.00	126,383	0.00	1,213,700	0.71
1/1/2024	10:00:00 AM	9,830	328,743	0.26	545,586	0.45	--	--	126,382	0.00	124,849	0.00	1,221,070	0.75
1/8/2024	10:30:00 AM	10,110	331,314	0.25	548,427	0.28	--	--	126,382	0.00	124,849	0.00	1,228,300	0.72
1/15/2024	11:15:00 AM	10,125	334,001	0.27	551,347	0.29	--	--	126,383	0.00	124,850	0.00	1,235,630	0.72
1/22/2024	10:30:00 AM	10,035	336,572	0.26	554,259	0.29	--	--	126,384	0.00	124,850	0.00	1,242,870	0.72
1/29/2024	10:30:00 AM	10,080	339,026	0.24	557,153	0.29	--	--	126,384	0.00	124,854	0.00	1,250,130	0.72
2/5/2024	10:30:00 AM	10,080	341,479	0.24	560,047	0.29	--	--	126,384	0.00	124,857	0.00	1,257,390	0.72
2/12/2024	11:00:00 AM	10,110	343,933	0.24	562,941	0.29	--	--	126,384	0.00	124,860	0.00	1,264,648	0.72
2/19/2024	11:00:00 AM	10,080	355,668	1.16	576,187	1.31	--	--	129,025	0.26	124,870	0.00	1,293,740	2.89
2/26/2024	10:20:00 AM	10,040	367,403	1.17	589,432	1.32	--	--	131,665	0.26	124,880	0.00	1,322,850	2.90
3/4/2024	10:30:00 AM	10,090	374,463	0.70	597,684	0.82	--	--	133,155	0.15	124,880	0.00	1,340,055	1.71
3/11/2024	11:00:00 AM	10,110	381,524	0.70	605,937	0.82	--	--	134,645	0.15	124,880	0.00	1,357,260	1.70
3/18/2024	10:30:00 AM	10,050	388,512	0.70	614,553	0.86	--	--	135,527	0.09	124,880	0.00	1,375,065	1.77
3/25/2024	10:30:00 AM	10,080	395,499	0.69	623,169	0.85	--	--	136,408	0.09	124,880	0.00	1,392,870	1.77
4/1/2024	10:30:00 AM	10,080	401,529	0.60	631,354	0.81	--	--	136,593	0.02	124,880	0.00	1,408,654	1.57
4/8/2024	10:00:00 AM	10,050	407,560	0.60	639,538	0.81	--	--	136,787	0.02	124,880	0.00	1,424,515	1.58
4/15/2024	10:00:00 AM	10,080	413,590	0.60	647,810	0.82	--	--	136,976	0.02	124,880	0.00	1,440,300	1.57
4/22/2024	11:00:00 AM	10,140	419,619	0.59	655,921	0.80	--	--	137,155	0.02	124,880	0.00	1,455,890	1.54
4/29/2024	10:30:00 AM	10,050	425,936	0.63	664,958	0.90	--	--	137,236	0.01	124,880	0.00	1,472,014	1.60
5/6/2024	10:30:00 AM	10,080	432,195	0.62	674,617	0.96	--	--	137,242	0.00	124,880	0.00	1,489,430	1.73
5/13/2024	10:30:00 AM	10,080	438,631	0.64	683,794	0.91	--	--	137,277	0.00	124,880	0.00	1,505,901	1.63
5/20/2024	10:15:00 AM	10,065	445,066	0.64	692,982	0.91	--	--	137,312	0.00	124,880	0.00	1,522,438	1.64
5/27/2024	10:30:00 AM	10,095	451,497	0.64	702,619	0.95	--	--	137,312	0.00	124,880	0.00	1,537,480	1.49
6/3/2024	11:00:00 AM	10,110	457,929	0.64	712,257	0.95	--	--	137,310	0.00	124,880	0.00	1,552,530	1.49
6/10/2024	11:00:00 AM	10,080	461,995	0.40	719,099	0.68	--	--	137,326	0.00	124,880	0.00	1,566,745	1.41
6/17/2024	10:30:00 AM	10,050	467,217	0.52	728,057	0.89	--	--	145,313	0.79	128,810	0.39	1,592,010	2.51
6/24/2024	11:30:00 AM	10,140	471,769	0.45	735,978	0.78	--	--	152,982	0.76	132,981	0.41	1,616,874	2.45
7/1/2024	11:30:00 AM	10,080	476,299	0.45	744,219	0.82	--	--	161,102	0.81	136,988	0.40	1,641,738	2.47

TABLE A1. PUMPING VOLUMES AND RATES
DEL ORO DAIRY, ANTHONY, NEW MEXICO

Date	Time	Elapsed Time (min)	EW-1		EW-2		EW-3		EW-4		EW-5		Tank	
			Meter Reading[1]	Q_{avg}[2]	Meter Reading[1]	Q_{avg}[2]	Meter Reading[1,3]	Q_{avg}[2]	Meter Reading[1]	Q_{avg}[2]	Meter Reading[1]	Q_{avg}[2]	Meter Reading[1]	Q_{avg}[2]
7/8/2024	11:30:00 AM	10,080	480,362	0.40	751,928	0.76	--	--	169,024	0.79	140,317	0.33	1,666,610	2.47
7/15/2024	11:00:00 AM	10,050	485,496	0.51	761,255	0.93	--	--	179,124	1.00	144,464	0.41	1,695,530	2.88
7/22/2024	1:00:00 PM	10,200	490,107	0.45	769,377	0.80	--	--	187,790	0.85	147,852	0.33	1,720,625	2.46
7/29/2024	12:00:00 PM	10,020	494,807	0.47	778,702	0.93	--	--	197,695	0.99	151,789	0.39	1,749,305	2.86
8/5/2024	10:20:00 AM	9,980	498,886	0.41	786,793	0.81	--	--	206,182	0.85	154,899	0.31	1,776,028	2.68
8/12/2024	1:40:00 PM	10,280	503,544	0.45	795,410	0.84	--	--	216,320	0.99	158,332	0.33	1,801,901	2.52
8/19/2024	10:50:00 AM	9,910	507,638	0.41	803,432	0.81	--	--	225,439	0.92	160,886	0.26	1,825,674	2.40
8/26/2024	10:30:00 AM	10,060	511,684	0.40	810,633	0.72	--	--	234,621	0.91	163,310	0.24	1,849,602	2.38
9/2/2024	10:30:00 AM	10,080	515,730	0.40	817,833	0.71	--	--	243,802	0.91	165,734	0.24	1,873,518	2.37
9/9/2024	10:30:00 AM	10,080	520,102	0.43	825,449	0.76	--	--	250,180	0.63	167,652	0.19	1,894,845	2.12
9/16/2024	10:30:00 AM	10,080	524,289	0.42	833,065	0.76	--	--	256,369	0.61	169,569	0.19	1,916,092	2.11
9/23/2024	10:15:00 AM	10,065	528,730	0.44	841,198	0.81	--	--	262,093	0.57	170,618	0.10	1,937,353	2.11
9/30/2024	10:30:00 AM	10,095	533,337	0.46	849,420	0.81	--	--	266,902	0.48	171,216	0.06	1,956,687	1.92
10/7/2024	2:00:00 PM	10,290	537,730	0.43	858,113	0.84	--	--	270,323	0.33	171,547	0.03	1,975,140	1.79
10/14/2024	9:30:00 AM	9,810	541,088	0.34	865,119	0.71	--	--	272,075	0.18	174,562	0.31	1,991,746	1.69
10/21/2024	11:40:00 AM	10,210	543,849	0.27	871,769	0.65	--	--	275,466	0.33	178,342	0.37	2,010,537	1.84
10/28/2024	11:30:00 AM	10,070	547,474	0.36	880,315	0.85	--	--	283,561	0.80	183,275	0.49	2,037,135	2.64
11/4/2024	10:15:00 AM	10,005	550,099	0.26	886,989	0.67	--	--	290,669	0.71	187,367	0.41	2,056,603	1.95
11/11/2024	11:10:00 AM	10,135	552,976	0.28	894,461	0.74	--	--	299,293	0.85	192,088	0.47	2,070,485	1.37
11/18/2024	11:00:00 AM	10,070	555,599	0.26	901,285	0.68	--	--	307,038	0.77	196,248	0.41	2,102,367	3.17
11/25/2024	11:00:00 AM	10,080	558,073	0.25	909,001	0.77	--	--	316,044	0.89	200,874	0.46	2,118,019	1.55
12/2/2024	11:00:00 AM	10,080	559,644	0.16	915,161	0.61	--	--	322,841	0.67	204,162	0.33	2,149,523	3.13
12/9/2024	1:00:00 PM	10,200	561,473	0.18	921,270	0.60	--	--	329,712	0.67	207,100	0.29	2,171,492	2.15
12/16/2024	10:30:00 AM	9,930	562,392	0.09	923,615	0.24	--	--	335,530	0.59	209,420	0.23	2,179,978	0.85
12/23/2024	11:00:00 AM	10,110	562,538	0.01	928,863	0.52	--	--	343,785	0.82	212,504	0.31	2,200,800	2.06
12/30/2024	10:30:00 AM	10,050	--	--	933,243	0.44	--	--	350,179	0.64	214,542	0.20	2,216,214	1.53
1/6/2025	11:00:00 AM	10,110	--	--	938,468	0.52	--	--	357,624	0.74	217,142	0.26	2,233,825	1.74
1/13/2025	11:25:00 AM	10,105	--	--	941,347	0.28	--	--	361,495	0.38	218,781	0.16	2,243,550	0.96
1/20/2025	11:30:00 AM	10,085	--	--	947,272	0.59	--	--	369,944	0.84	222,024	0.32	2,263,501	1.98
1/27/2025	1:00:00 PM	10,170	--	--	951,508	0.42	--	--	374,470	0.45	225,111	0.30	2,283,560	1.97
2/3/2025	10:30:00 AM	9,930	--	--	953,518	0.20	--	--	381,706	0.73	227,560	0.25	2,303,715	2.03
2/10/2025	3:15:00 PM	10,365	--	--	957,695	0.40	--	--	391,344	0.93	230,849	0.32	2,320,875	1.66
2/17/2025	11:15:00 AM	9,840	--	--	961,034	0.34	--	--	399,510	0.83	233,320	0.25	2,337,948	1.74
2/24/2025	10:40:00 AM	10,045	1,617	--	964,374	0.33	--	--	407,669	0.81	235,792	0.25	2,355,035	1.70
3/3/2025	10:15:00 AM	10,055	4,796	0.32	968,055	0.37	--	--	418,210	1.05	239,720	0.39	2,371,260	1.61
3/10/2025	11:00:00 AM	10,125	6,663	0.18	972,554	0.44	--	--	424,976	0.67	242,556	0.28	2,385,420	1.40
3/17/2025	11:00:00 AM	10,080	9,220	0.25	974,130	0.16	--	--	431,429	0.64	246,308	0.37	2,395,680	1.02
3/24/2025	10:30:00 AM	10,050	13,065	0.38	977,646	0.35	--	--	438,958	0.75	251,075	0.47	2,418,060	2.23
3/31/2025	1:00:00 PM	10,230	16,688	0.35	981,977	0.42	--	--	446,470	0.73	255,346	0.42	2,430,638	1.23
4/7/2025	1:00:00 PM	10,080	18,874	0.22	984,397	0.24	--	--	452,018	0.55	258,044	0.27	2,442,265	1.15
4/14/2025	10:30:00 AM	9,930	23,287	0.44	988,304	0.39	--	--	459,972	0.80	258,851	0.08	2,459,235	1.71
4/21/2025	10:30:00 AM	10,080	26,121	0.28	990,971	0.26	--	--	465,513	0.55	262,264	0.34	2,472,325	1.30
Pumping Period Averages:	--	--	--	0.30	--	0.35	--	--	--	0.74	--	0.31	--	1.62

Notes:

[1] Meter readings in total gallons

[2] Q_{avg} = Average discharge in gallons per minute (total volume pumped [end meter - beginning meter] / time in pumping period (minutes)

[3] The pump in EW-3 was disconnected in July 2023 due to repeated malfunctions caused by low permeability of the surrounding aquifer.

-- = Not applicable

ft = Feet

min = Minutes

Current pumping period

TABLE A2. DEL ORO DAIRY EXTRACTION WELL ANALYTICAL RESULTS
DONA ANA DAIRIES, DONA ANA COUNTY, NEW MEXICO

Extraction Well	Date Sampled	Nitrate (mg/l)	TKN (mg/l)	Chloride (mg/l)	TDS (mg/l)
EW-1	3/7/2025	20	<0.50	520	1,700
	12/2/2024	180	<1.3	1,100	3,900
	9/6/2024	130	<0.50	1,000	4,000
	6/5/2024	190	<0.50	1,200	4,700
	2/29/2024	160	<0.50	980	4,190
	12/4/2023	190	<0.50	1,100	4,340
	8/29/2023	180	<5.0	1,100	4,280
	5/19/2023	190	<1.0	1,100	4,220
	3/1/2023	130	<5.0	820	3,400
	10/27/2022	160	<5.0	1,100	4,490
EW-2	3/7/2025	140	<0.50	970	3,500
	11/26/2024	120	<0.50	800	3,200
	9/6/2024	130	<0.50	730	3,000
	6/4/2024	130	<0.50	890	3,800
	2/29/2024	190	<0.50	1,100	4,140
	11/29/2023	130	<0.50	880	3,420
	8/30/2023	120	<5.0	810	3,340
	5/18/2023	130	<1.0	870	3,280
	3/1/2023	130	<5.0	820	3,190
	10/27/2022	150	<5.0	950	3,910
EW-3	6/4/2024	Pump Removed Due to Low Permeability of Surrounding Aquifer			
	2/27/2024	Not Sampled - Malfunctioning Pump Due to Low Permeability of Surrounding Aquifer			
	11/29/2023				
	8/30/2023				
	5/18/2023				
	2/27/2023	74	<5.0	670	2,520
	10/27/2022	99	<5.0	710	3,180
EW-4	3/4/2025	17	<0.50	480	1,600
	11/25/2024	23	<0.50	480	1,700
	9/4/2024	23	<0.50	460	1,700
	6/4/2024	11	<0.50	400	1,500
	2/27/2024	24	<0.50	500	1,860
	11/29/2023	16	1.1	410	1,470
	8/25/2023	29	<5.0	420	1,580
	5/18/2023	28	<5.0	410	1,510
	2/27/2023	20	<5.0	430	1,450
	10/27/2022	25	<5.0	390	1,510
EW-5	3/4/2025	20	<0.50	580	1,800
	11/25/2024	18	<0.50	530	1,800
	9/4/2024	18	<0.50	470	1,800
	6/14/2024	20	<0.50	530	1,900
	2/27/2024	Not Sampled			
	11/29/2023	20	<0.50	490	1,820
	8/25/2023	14	<2.0	450	1,750
	5/18/2023	17	<2.0	490	1,820
	3/15/2023	15	14	510	1,800
	10/27/2022	12	<2.0	410	1,800
NMWQCC Standard		**10**	**NA**	**250**	**1,000**
Existing Conditions		**NA**	**NA**	**455**	**1,424**

NOTES:
* = Pre-August 2020 existing conditions were in place prior to August 2020. This condition is no longer applicable.
< = Analyte not detected above the displayed reporting limit.
NMWQCC = New Mexico Water Quality Control Commission
TDS = Total dissolved solids
TKN = Total Kjeldahl Nitrogen
Anomalous data. Samples suspected to have been switched.
Data from current quarter.
Highlight is at or above NMWQCC Standard.
Highlight is at or above relevant existing conditions value. Applicable to samples collected in or after August 2020.

TABLE A3. SUMMARY OF NITRATE MASS REMOVAL
DEL ORO DAIRY, ANTHONY, NEW MEXICO

Sampling Date(s)	Pumping Period Start	Pumping Period End	Days Pumping	EW-1			EW-2			EW-3			EW-4			EW-5			Total Mass This Period[3]	Cumulative Mass Removed[4]
				Q_{avg}[1]	C[2]	M_{total}[3]	Q_{avg}	C	M_{total}[3]	Q_{avg}	C	M_{total}[3]	Q_{avg}	C	M_{total}[3]	Q_{avg}	C	M_{total}[3]		
03/04/25-03/07/25	1/14/2025	4/21/2025	97	0.30	20	7.0	0.35	140	57.6	0	NS	0.0	0.74	17	14.8	0.31	20	7.3	86.7	2,132
11/26/2024-12/2/2024	10/8/2024	1/13/2025	97	0.22	180	46.5	0.59	120	83.1	0	NS	0.0	0.65	23	17.5	0.33	18	7.0	154.1	2,045
9/4/2024-9/6/2024	7/9/2024	10/7/2024	90	0.44	130	62.5	0.81	130	115	0	NS	0.0	0.77	23	19.3	0.24	18	4.7	201.6	1,891
6/4/2024-6/14/2024	3/26/2024	7/8/2024	104	0.56	190	134	0.85	130	139	0	NS	0.0	0.22	11	3.0	0.10	20	2.6	279.2	1,689
2/27/2024-2/29/2024	12/5/2023	3/25/2024	111	0.49	160	105	0.59	190	152	0	NS	0.0	0.06	24	2.0	0.00	NS	0.0	258.4	1,410
11/29/2023-12/4/2023	8/29/2023	12/4/2023	97	0.61	190	137	0.77	130	118	0	NS	0.0	0.05	16	0.9	0.03	20	0.7	257.4	1,152
8/28/2023 - 8/30/23	5/16/2023	8/28/2023	104	1.23	180	279	1.20	120	182	0	NS	0.0	0.29	29	10.5	0.20	14	3.6	475.6	894.4
5/19/2023	2/28/2023	5/15/2023	76	0.62	190	110	1.21	130	145	0	NS	0.0	0.60	28	15.5	0.36	17	5.6	275.7	418.8
3/1/2023	12/22/2022	2/27/2023	67	0.35	130	37.0	0.96	130	100	0	74	0.0	0.04	20	0.6	0.42	15	5.0	143.0	143.0

Notes:

1 Q_{avg} Average discharge gallons per minute (total volume pumped / time in pumping period (minutes)

2 C Nitrate concentration milligrams per liter (mg/L)

3 M_{total} Total mass removed (pounds) this pumping period from all extraction wells

4 Cumulative mass of nitrate removed (pounds) since start of pumping

NS = Not Sampled

Anomalous data. Samples suspected to have been switched.

Data from current quarter.

TABLE A4. CAPTURE ANALYSIS FOR PUMPING WELLS
DEL ORO DAIRY, ANTHONY, NEW MEXICO

Pumping Period Start	Pumping Period End	Hydraulic Gradient (ft/ft)	EW-1		EW-2		EW-3		EW-4		EW-5	
			Q_{avg} [1]	Capture Width[2]	Q_{avg} [1]	Capture Width[2]	Q_{avg} [1]	Capture Width[2]	Q_{avg} [1]	Capture Width[2]	Q_{avg} [1]	Capture Width[2]
1/14/2025	4/21/2025	0.005	0.30	83	0.35	96	0.00	0	0.74	190	0.31	80
10/8/2024	1/13/2025	0.004	0.22	76	0.59	203	0.00	0	0.65	209	0.33	106
7/9/2024	10/7/2024	0.004	0.44	150	0.81	277	0.00	0	0.77	247	0.24	77
3/26/2024	7/8/2024	0.004	0.56	193	0.85	293	0.00	0	0.22	69	0.10	33
12/5/2023	3/25/2024	0.004	0.49	168	0.59	205	0.00	0	0.06	20	0.00	0
8/29/2023	12/4/2023	0.004	0.61	211	0.77	266	0.00	0	0.05	15	0.03	10
5/16/2023	8/28/2023	0.004	1.23	424	1.20	413	0.00	0	0.29	92	0.20	65
2/28/2023	5/15/2023	0.003	0.62	284	1.21	555	0.00	0	0.60	257	0.36	154
12/22/2023	2/27/2022	0.004	0.98	337	1.23	424	0.05	172	0.75	241	0.69	221

Notes:

Transmissivity (ft^2/day):

Well	K	b	T
EW-1	10	14	140
EW-2	10	14	140
EW-3	1	14	14
EW-4	10	15	150
EW-5	10	15	150

[1] Q (ft^3/day) = [Q_{avg}/7.48]*1,440 minutes/day = Average pumping rate this reporting period (gpm) divided by 7.48 gallons per cubic foot water times 1,440 minutes per day

[2] Capture Width = Capture width in feet. Q/(Ti) (Todd, David Keith 1980. Groundwater Hydrology, 2nd Edition. John Wiley and Sons.)

$_{avg}$ = Average

b = Aquifer thickness ≈ screen submergence (ft)

ft = Feet

i = Hydraulic gradient (ft/ft)

K = Hydraulic conductivity (ft/day)

Q = Discharge

T = Transmissivity (ft^2/day)

Data from current quarter.

ATTACHMENTS

ATTACHMENT 1 – WEEKLY LIQUID DEPTH MEASUREMENTS FOR LAGOONS

CAFO Weekly Storage and Containment Structure Inspections
Log Sheet

2025

Facility Name: __Del Oro Dairy_____ NPDES Permit No.: ___NMG010026____

Storage or Containment Structure: ___Evaporative Pond A_____ (Instructions on back)

Week	Date	Initials	Depth Marker Reading	Notes	Date Corrected
Week 1	1/7/25	ER	9-		
Week 2	1/14/25	ER	9-		
Week 3	1/21/25	ER	9-		
Week 4	1/28/25	ER	9-		
Week 5	2/4/25	ER	9-		
Week 6	2/11/25	ER	9-		
Week 7	2/18/25	ER	9-		
Week 8	2/25/25	ER	9-		
Week 9	3/4/25	ER	9-		
Week 10	3/11/25	ER	9-		
Week 11	3/18/25	ER	9-		
Week 12	3/25/25	ER	9-		
Week 13	4/1/25	ER	9-		
Week 14	4/8/25	ER	9-		
Week 15	4/15/25	ER	9-		
Week 16	4/22/25	ER	9-		
Week 17					
Week 18					
Week 19					
Week 20					
Week 21					
Week 22					
Week 23					
Week 24					
Week 25					
Week 26					
Week 27					
Week 28					
Week 29					
Week 30					
Week 31					
Week 32					
Week 33					
Week 34					
Week 35					
Week 36					
Week 37					
Week 38					
Week 39					
Week 40					
Week 41					
Week 42					
Week 43					
Week 44					
Week 45					
Week 46					
Week 47					
Week 48					
Week 49					
Week 50					
Week 51					
Week 52					

CAFO Weekly Storage and Containment Structure Inspections
Log Sheet

2025

Facility Name: __Del Oro Dairy_____ NPDES Permit No.: ___NMG010026____

Storage or Containment Structure: ___Evaporative Pond_____B_____ (Instructions on back)

Week	Date	Initials	Depth Marker Reading	Notes	Date Corrected
Week 1	1/7/25	ER	6 —		
Week 2	1/14/25	ER	6 —		
Week 3	1/21/25	ER	6 —		
Week 4	1/28/25	ER	6 —		
Week 5	2/4/25	ER	6 1/2		
Week 6	2/11/25	ER	6 1/2		
Week 7	2/18/25	ER	7 —		
Week 8	2/25/25	ER	7 1/2		
Week 9	3/4/25	ER	7 1/2		
Week 10	3/11/25	ER	7 1/2		
Week 11	3/18/25	ER	8 —		
Week 12	3/25/25	ER	8 —		
Week 13	4/1/25	ER	7 1/2		
Week 14	4/8/25	ER	7 1/2		
Week 15	4/15/25	ER	7 1/2		
Week 16	4/22/25	ER	7 1/2		
Week 17					
Week 18					
Week 19					
Week 20					
Week 21					
Week 22					
Week 23					
Week 24					
Week 25					
Week 26					
Week 27					
Week 28					
Week 29					
Week 30					
Week 31					
Week 32					
Week 33					
Week 34					
Week 35					
Week 36					
Week 37					
Week 38					
Week 39					
Week 40					
Week 41					
Week 42					
Week 43					
Week 44					
Week 45					
Week 46					
Week 47					
Week 48					
Week 49					
Week 50					
Week 51					
Week 52					

2025

CAFO Weekly Storage and Containment Structure Inspections
Log Sheet

Facility Name: __Del Oro Dairy_____ NPDES Permit No.: ___NMG010026____

Storage or Containment Structure: ___Evaporative Pond_____ (Instructions on back)

Week	Date	Initials	Depth Marker Reading	Notes	Date Corrected
Week 1	1/7/25	ER	0		
Week 2	1/14/25	ER	0		
Week 3	1/21/25	ER	0		
Week 4	1/28/25	ER	0		
Week 5	2/4/25	ER	0		
Week 6	2/11/25	ER	0		
Week 7	2/18/25	ER	0		
Week 8	2/25/25	ER	0		
Week 9	3/4/25	ER	0		
Week 10	3/11/25	ER	0		
Week 11	3/18/25	ER	0		
Week 12	3/25/25	ER	0		
Week 13	4/1/25	ER	0		
Week 14	4/8/25	ER	0		
Week 15	4/15/25	ER	0		
Week 16	4/22/25	ER	0		
Week 17					
Week 18					
Week 19					
Week 20					
Week 21					
Week 22					
Week 23					
Week 24					
Week 25					
Week 26					
Week 27					
Week 28					
Week 29					
Week 30					
Week 31					
Week 32					
Week 33					
Week 34					
Week 35					
Week 36					
Week 37					
Week 38					
Week 39					
Week 40					
Week 41					
Week 42					
Week 43					
Week 44					
Week 45					
Week 46					
Week 47					
Week 48					
Week 49					
Week 50					
Week 51					
Week 52					

CAFO Weekly Storage and Containment Structure Inspections
Log Sheet

NPDES Permit No.: ___NMG010026____ 2025

Facility Name: __Del Oro Dairy_____

Storage or Containment Structure: ___Evaporative Pond___D___ (Instructions on back)

Week	Date	Initials	Depth Marker Reading	Notes	Date Corrected
Week 1	1/7/25	ER	0		
Week 2	1/14/25	ER	0		
Week 3	1/21/25	ER	0		
Week 4	1/28/25	ER	0		
Week 5	2/4/25	ER	0		
Week 6	2/11/25	ER	0		
Week 7	2/18/25	ER	0		
Week 8	2/25/25	ER	0		
Week 9	3/4/25	ER	0		
Week 10	3/11/25	ER	0		
Week 11	3/18/25	ER	0		
Week 12	3/25/25	ER	0		
Week 13	4/1/25	ER	0		
Week 14	4/8/25	ER	0		
Week 15	4/15/25	ER	0		
Week 16	4/22/25	ER	0		
Week 17					
Week 18					
Week 19					
Week 20					
Week 21					
Week 22					
Week 23					
Week 24					
Week 25					
Week 26					
Week 27					
Week 28					
Week 29					
Week 30					
Week 31					
Week 32					
Week 33					
Week 34					
Week 35					
Week 36					
Week 37					
Week 38					
Week 39					
Week 40					
Week 41					
Week 42					
Week 43					
Week 44					
Week 45					
Week 46					
Week 47					
Week 48					
Week 49					
Week 50					

ATTACHMENT 2 – ANALYTICAL LABORATORY REPORTS

(Provided in Electronic Format via CD Located on Front Cover of Report)

eurofins | Environment Testing

ANALYTICAL REPORT

PREPARED FOR

Attn: Regina Mullen
EA Engineering
320 Gold Ave SW
Suite 1210
Albuquerque, New Mexico 87102

Generated 3/14/2025 10:03:52 AM

JOB DESCRIPTION

Del Oro Dairy

JOB NUMBER

885-20902-1

Eurofins Albuquerque
4901 Hawkins NE
Albuquerque NM 87109

See page two for job notes and contact information.

Eurofins Albuquerque

Job Notes

The test results in this report relate only to the samples as received by the laboratory and will meet all requirements of the methodology, with any exceptions noted. This report shall not be reproduced except in full, without the express written approval of the laboratory. All questions should be directed to the Eurofins Environment Testing South Central, LLC Project Manager.

Authorization

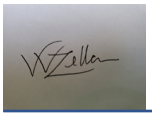

Generated
3/14/2025 10:03:52 AM

Authorized for release by
Victoria Zellar, Project Manager
Victoria.Zellar@et.eurofinsus.com
(505)345-3975

Table of Contents

Definitions/Glossary

Client: EA Engineering
Project/Site: Del Oro Dairy

Job ID: 885-20902-1

Qualifiers

General Chemistry

Qualifier	Qualifier Description
F1	MS and/or MSD recovery exceeds control limits.

Glossary

Abbreviation	These commonly used abbreviations may or may not be present in this report.
☼	Listed under the "D" column to designate that the result is reported on a dry weight basis
%R	Percent Recovery
CFL	Contains Free Liquid
CFU	Colony Forming Unit
CNF	Contains No Free Liquid
DER	Duplicate Error Ratio (normalized absolute difference)
Dil Fac	Dilution Factor
DL	Detection Limit (DoD/DOE)
DL, RA, RE, IN	Indicates a Dilution, Re-analysis, Re-extraction, or additional Initial metals/anion analysis of the sample
DLC	Decision Level Concentration (Radiochemistry)
EDL	Estimated Detection Limit (Dioxin)
LOD	Limit of Detection (DoD/DOE)
LOQ	Limit of Quantitation (DoD/DOE)
MCL	EPA recommended "Maximum Contaminant Level"
MDA	Minimum Detectable Activity (Radiochemistry)
MDC	Minimum Detectable Concentration (Radiochemistry)
MDL	Method Detection Limit
ML	Minimum Level (Dioxin)
MPN	Most Probable Number
MQL	Method Quantitation Limit
NC	Not Calculated
ND	Not Detected at the reporting limit (or MDL or EDL if shown)
NEG	Negative / Absent
POS	Positive / Present
PQL	Practical Quantitation Limit
PRES	Presumptive
QC	Quality Control
RER	Relative Error Ratio (Radiochemistry)
RL	Reporting Limit or Requested Limit (Radiochemistry)
RPD	Relative Percent Difference, a measure of the relative difference between two points
TEF	Toxicity Equivalent Factor (Dioxin)
TEQ	Toxicity Equivalent Quotient (Dioxin)
TNTC	Too Numerous To Count

Job Narrative
885-20902-1

Analytical test results meet all requirements of the associated regulatory program listed on the Accreditation/Certification Summary Page unless otherwise noted under the individual analysis. Data qualifiers and/or narrative comments are included to explain any exceptions, if applicable.

- Matrix QC may not be reported if insufficient sample is provided or site-specific QC samples were not submitted. In these situations, to demonstrate precision and accuracy at a batch level, a LCS/LCSD may be performed, unless otherwise specified in the method.
- Surrogate and/or isotope dilution analyte recoveries (if applicable) which are outside of the QC window are confirmed unless attributed to a dilution or otherwise noted in the narrative.

Regulated compliance samples (e.g. SDWA, NPDES) must comply with the associated agency requirements/permits.

Receipt
The samples were received on 3/5/2025 10:10 AM. Unless otherwise noted below, the samples arrived in good condition, and, where required, properly preserved and on ice. The temperature of the cooler at receipt time was 0.2°C.

HPLC/IC
Method 300_OF_48H_PREC: The following samples were diluted due to the nature of the sample matrix: EW-05 (885-20902-1), 692-02 (885-20902-2) and EW-04 (885-20902-3). Elevated reporting limits (RLs) are provided.

No additional analytical or quality issues were noted, other than those described above or in the Definitions/ Glossary page.

General Chemistry
Method 351.2: The matrix spike / matrix spike duplicate (MS/MSD) recoveries for preparation batch 885-22003 and 885-22060 and analytical batch 885-22211 were outside control limits for one or more analytes. See QC Sample Results for detail. Sample matrix interference and/or non-homogeneity are suspected because the associated laboratory control sample (LCS) recovery is within acceptance limits.

No additional analytical or quality issues were noted, other than those described above or in the Definitions/ Glossary page.

Client Sample Results

Client: EA Engineering
Project/Site: Del Oro Dairy

Job ID: 885-20902-1

Client Sample ID: EW-05

Date Collected: 03/04/25 12:43
Date Received: 03/05/25 10:10

Lab Sample ID: 885-20902-1

Matrix: Water

Method: EPA 300.0 - Anions, Ion Chromatography

Analyte	Result	Qualifier	RL		Unit	D	Prepared	Analyzed	Dil Fac
Chloride	**580**		50		mg/L			03/05/25 18:30	100
Nitrate Nitrite as N	**20**		2.0		mg/L			03/05/25 17:55	10

General Chemistry

Analyte	Result	Qualifier	RL		Unit	D	Prepared	Analyzed	Dil Fac
Total Dissolved Solids (SM 2540C)	**1800**		100		mg/L			03/07/25 09:34	1
Nitrogen, Total Kjeldahl (EPA 351.2)	ND		0.50		mg/L		03/06/25 11:35	03/10/25 17:11	1

Client Sample Results

Client: EA Engineering
Project/Site: Del Oro Dairy

Job ID: 885-20902-1

Client Sample ID: 692-02

Date Collected: 03/04/25 14:17
Date Received: 03/05/25 10:10

Lab Sample ID: 885-20902-2

Matrix: Water

Method: EPA 300.0 - Anions, Ion Chromatography

Analyte	Result	Qualifier	RL		Unit	D	Prepared	Analyzed	Dil Fac
Chloride	**450**		50		mg/L			03/05/25 18:54	100
Sulfate	**310**		5.0		mg/L			03/05/25 18:42	10
Nitrate Nitrite as N	**7.3**		2.0		mg/L			03/05/25 18:42	10

General Chemistry

Analyte	Result	Qualifier	RL		Unit	D	Prepared	Analyzed	Dil Fac
Total Dissolved Solids (SM 2540C)	**1500**		100		mg/L			03/07/25 09:34	1
Nitrogen, Total Kjeldahl (EPA 351.2)	ND		1.3		mg/L		03/07/25 11:24	03/11/25 13:44	1

Client Sample Results

Client: EA Engineering
Project/Site: Del Oro Dairy

Job ID: 885-20902-1

Client Sample ID: EW-04

Lab Sample ID: 885-20902-3

Date Collected: 03/04/25 15:15

Matrix: Water

Date Received: 03/05/25 10:10

Method: EPA 300.0 - Anions, Ion Chromatography

Analyte	Result	Qualifier	RL		Unit	D	Prepared	Analyzed	Dil Fac
Chloride	480		50		mg/L			03/05/25 19:18	100
Nitrate Nitrite as N	17		2.0		mg/L			03/05/25 19:06	10

General Chemistry

Analyte	Result	Qualifier	RL		Unit	D	Prepared	Analyzed	Dil Fac
Total Dissolved Solids (SM 2540C)	1600		100		mg/L			03/07/25 09:34	1
Nitrogen, Total Kjeldahl (EPA 351.2)	ND	F1	0.50		mg/L		03/06/25 11:35	03/10/25 17:15	1

QC Sample Results

Client: EA Engineering
Project/Site: Del Oro Dairy

Job ID: 885-20902-1

Method: 300.0 - Anions, Ion Chromatography

Lab Sample ID: MB 885-21883/45 — **Client Sample ID: Method Blank**
Matrix: Water — **Prep Type: Total/NA**
Analysis Batch: 21883

Analyte	MB Result	MB Qualifier	RL		Unit	D	Prepared	Analyzed	Dil Fac
Chloride	ND		0.50		mg/L			03/05/25 17:07	1
Sulfate	ND		0.50		mg/L			03/05/25 17:07	1

Lab Sample ID: LCS 885-21883/46 — **Client Sample ID: Lab Control Sample**
Matrix: Water — **Prep Type: Total/NA**
Analysis Batch: 21883

Analyte			Spike Added	LCS Result	LCS Qualifier	Unit	D	%Rec	%Rec Limits		
Chloride			5.00	5.07		mg/L		101	90 - 110		
Sulfate			10.0	10.2		mg/L		102	90 - 110		

Lab Sample ID: MRL 885-21883/3 — **Client Sample ID: Lab Control Sample**
Matrix: Water — **Prep Type: Total/NA**
Analysis Batch: 21883

Analyte			Spike Added	MRL Result	MRL Qualifier	Unit	D	%Rec	%Rec Limits		
Chloride			0.500	0.544		mg/L		109	50 - 150		
Sulfate			0.500	0.569		mg/L		114	50 - 150		

Lab Sample ID: 885-20902-1 MS — **Client Sample ID: EW-05**
Matrix: Water — **Prep Type: Total/NA**
Analysis Batch: 21883

Analyte	Sample Result	Sample Qualifier	Spike Added	MS Result	MS Qualifier	Unit	D	%Rec	%Rec Limits		
Sulfate	300		100	402		mg/L		104	80 - 120		

Lab Sample ID: 885-20902-1 MSD — **Client Sample ID: EW-05**
Matrix: Water — **Prep Type: Total/NA**
Analysis Batch: 21883

Analyte	Sample Result	Sample Qualifier	Spike Added	MSD Result	MSD Qualifier	Unit	D	%Rec	%Rec Limits	RPD	RPD Limit
Sulfate	300		100	400		mg/L		102	80 - 120	1	20

Lab Sample ID: MB 885-21884/45 — **Client Sample ID: Method Blank**
Matrix: Water — **Prep Type: Total/NA**
Analysis Batch: 21884

Analyte	MB Result	MB Qualifier	RL		Unit	D	Prepared	Analyzed	Dil Fac
Nitrate Nitrite as N	ND		0.20		mg/L			03/05/25 17:07	1

Lab Sample ID: LCS 885-21884/46 — **Client Sample ID: Lab Control Sample**
Matrix: Water — **Prep Type: Total/NA**
Analysis Batch: 21884

Analyte			Spike Added	LCS Result	LCS Qualifier	Unit	D	%Rec	%Rec Limits		
Nitrate Nitrite as N			3.50	3.72		mg/L		106	90 - 110		

Method: 300.0 - Anions, Ion Chromatography (Continued)

Lab Sample ID: MRL 885-21884/3 — **Client Sample ID: Lab Control Sample**
Matrix: Water — **Prep Type: Total/NA**
Analysis Batch: 21884

Analyte			Spike Added	MRL Result	MRL Qualifier	Unit	D	%Rec	%Rec Limits		
Nitrate Nitrite as N			0.200	0.216		mg/L		108	50 - 150		

Lab Sample ID: 885-20902-1 MS — **Client Sample ID: EW-05**
Matrix: Water — **Prep Type: Total/NA**
Analysis Batch: 21884

Analyte	Sample Result	Sample Qualifier	Spike Added	MS Result	MS Qualifier	Unit	D	%Rec	%Rec Limits		
Nitrate Nitrite as N	20		35.0	58.3		mg/L		109	80 - 120		

Lab Sample ID: 885-20902-1 MSD — **Client Sample ID: EW-05**
Matrix: Water — **Prep Type: Total/NA**
Analysis Batch: 21884

Analyte	Sample Result	Sample Qualifier	Spike Added	MSD Result	MSD Qualifier	Unit	D	%Rec	%Rec Limits	RPD	RPD Limit
Nitrate Nitrite as N	20		35.0	57.9		mg/L		108	80 - 120	1	20

Method: 2540C - Solids, Total Dissolved (TDS)

Lab Sample ID: MB 885-22044/1 — **Client Sample ID: Method Blank**
Matrix: Water — **Prep Type: Total/NA**
Analysis Batch: 22044

Analyte	MB Result	MB Qualifier	RL		Unit	D	Prepared	Analyzed	Dil Fac
Total Dissolved Solids	ND		50		mg/L			03/07/25 09:34	1

Lab Sample ID: LCS 885-22044/2 — **Client Sample ID: Lab Control Sample**
Matrix: Water — **Prep Type: Total/NA**
Analysis Batch: 22044

Analyte			Spike Added	LCS Result	LCS Qualifier	Unit	D	%Rec	%Rec Limits		
Total Dissolved Solids			1000	1010		mg/L		101	80 - 120		

Lab Sample ID: 885-20902-1 DU — **Client Sample ID: EW-05**
Matrix: Water — **Prep Type: Total/NA**
Analysis Batch: 22044

Analyte	Sample Result	Sample Qualifier		DU Result	DU Qualifier	Unit	D			RPD	RPD Limit
Total Dissolved Solids	1800			1830		mg/L				0.2	10

Method: 351.2 - Nitrogen, Total Kjeldahl

Lab Sample ID: MB 885-22003/3-A — **Client Sample ID: Method Blank**
Matrix: Water — **Prep Type: Total/NA**
Analysis Batch: 22211 — **Prep Batch: 22003**

Analyte	MB Result	MB Qualifier	RL		Unit	D	Prepared	Analyzed	Dil Fac
Nitrogen, Total Kjeldahl	ND		0.50		mg/L		03/06/25 11:35	03/10/25 16:57	1

Method: 351.2 - Nitrogen, Total Kjeldahl (Continued)

Lab Sample ID: LCS 885-22003/5-A — **Client Sample ID: Lab Control Sample**
Matrix: Water — **Prep Type: Total/NA**
Analysis Batch: 22211 — **Prep Batch: 22003**

Analyte	Spike Added	LCS Result	LCS Qualifier	Unit	D	%Rec	%Rec Limits
Nitrogen, Total Kjeldahl	10.0	10.3		mg/L		103	90 - 110

Lab Sample ID: MRL 885-22003/4-A — **Client Sample ID: Lab Control Sample**
Matrix: Water — **Prep Type: Total/NA**
Analysis Batch: 22211 — **Prep Batch: 22003**

Analyte	Spike Added	MRL Result	MRL Qualifier	Unit	D	%Rec	%Rec Limits
Nitrogen, Total Kjeldahl	0.500	0.534		mg/L		107	50 - 150

Lab Sample ID: 885-20902-3 MS — **Client Sample ID: EW-04**
Matrix: Water — **Prep Type: Total/NA**
Analysis Batch: 22211 — **Prep Batch: 22003**

Analyte	Sample Result	Sample Qualifier	Spike Added	MS Result	MS Qualifier	Unit	D	%Rec	%Rec Limits
Nitrogen, Total Kjeldahl	ND	F1	10.0	6.71	F1	mg/L		67	90 - 110

Lab Sample ID: 885-20902-3 MSD — **Client Sample ID: EW-04**
Matrix: Water — **Prep Type: Total/NA**
Analysis Batch: 22211 — **Prep Batch: 22003**

Analyte	Sample Result	Sample Qualifier	Spike Added	MSD Result	MSD Qualifier	Unit	D	%Rec	%Rec Limits	RPD	RPD Limit
Nitrogen, Total Kjeldahl	ND	F1	10.0	7.20	F1	mg/L		72	90 - 110	7	20

Lab Sample ID: MB 885-22060/1-A — **Client Sample ID: Method Blank**
Matrix: Water — **Prep Type: Total/NA**
Analysis Batch: 22271 — **Prep Batch: 22060**

Analyte	MB Result	MB Qualifier	RL	Unit	D	Prepared	Analyzed	Dil Fac
Nitrogen, Total Kjeldahl	ND		0.50	mg/L		03/07/25 11:24	03/11/25 13:25	1

Lab Sample ID: LCS 885-22060/3-A — **Client Sample ID: Lab Control Sample**
Matrix: Water — **Prep Type: Total/NA**
Analysis Batch: 22271 — **Prep Batch: 22060**

Analyte	Spike Added	LCS Result	LCS Qualifier	Unit	D	%Rec	%Rec Limits
Nitrogen, Total Kjeldahl	10.0	10.4		mg/L		104	90 - 110

Lab Sample ID: MRL 885-22060/2-A — **Client Sample ID: Lab Control Sample**
Matrix: Water — **Prep Type: Total/NA**
Analysis Batch: 22271 — **Prep Batch: 22060**

Analyte	Spike Added	MRL Result	MRL Qualifier	Unit	D	%Rec	%Rec Limits
Nitrogen, Total Kjeldahl	0.500	0.526		mg/L		105	50 - 150

QC Association Summary

Client: EA Engineering
Project/Site: Del Oro Dairy

Job ID: 885-20902-1

HPLC/IC

Analysis Batch: 21883

Lab Sample ID	Client Sample ID	Prep Type	Matrix	Method	Prep Batch
885-20902-1	EW-05	Total/NA	Water	300.0	
885-20902-2	692-02	Total/NA	Water	300.0	
885-20902-2	692-02	Total/NA	Water	300.0	
885-20902-3	EW-04	Total/NA	Water	300.0	
MB 885-21883/45	Method Blank	Total/NA	Water	300.0	
LCS 885-21883/46	Lab Control Sample	Total/NA	Water	300.0	
MRL 885-21883/3	Lab Control Sample	Total/NA	Water	300.0	
885-20902-1 MS	EW-05	Total/NA	Water	300.0	
885-20902-1 MSD	EW-05	Total/NA	Water	300.0	

Analysis Batch: 21884

Lab Sample ID	Client Sample ID	Prep Type	Matrix	Method	Prep Batch
885-20902-1	EW-05	Total/NA	Water	300.0	
885-20902-2	692-02	Total/NA	Water	300.0	
885-20902-3	EW-04	Total/NA	Water	300.0	
MB 885-21884/45	Method Blank	Total/NA	Water	300.0	
LCS 885-21884/46	Lab Control Sample	Total/NA	Water	300.0	
MRL 885-21884/3	Lab Control Sample	Total/NA	Water	300.0	
885-20902-1 MS	EW-05	Total/NA	Water	300.0	
885-20902-1 MSD	EW-05	Total/NA	Water	300.0	

General Chemistry

Prep Batch: 22003

Lab Sample ID	Client Sample ID	Prep Type	Matrix	Method	Prep Batch
885-20902-1	EW-05	Total/NA	Water	351.2	
885-20902-3	EW-04	Total/NA	Water	351.2	
MB 885-22003/3-A	Method Blank	Total/NA	Water	351.2	
LCS 885-22003/5-A	Lab Control Sample	Total/NA	Water	351.2	
MRL 885-22003/4-A	Lab Control Sample	Total/NA	Water	351.2	
885-20902-3 MS	EW-04	Total/NA	Water	351.2	
885-20902-3 MSD	EW-04	Total/NA	Water	351.2	

Analysis Batch: 22044

Lab Sample ID	Client Sample ID	Prep Type	Matrix	Method	Prep Batch
885-20902-1	EW-05	Total/NA	Water	2540C	
885-20902-2	692-02	Total/NA	Water	2540C	
885-20902-3	EW-04	Total/NA	Water	2540C	
MB 885-22044/1	Method Blank	Total/NA	Water	2540C	
LCS 885-22044/2	Lab Control Sample	Total/NA	Water	2540C	
885-20902-1 DU	EW-05	Total/NA	Water	2540C	

Prep Batch: 22060

Lab Sample ID	Client Sample ID	Prep Type	Matrix	Method	Prep Batch
885-20902-2	692-02	Total/NA	Water	351.2	
MB 885-22060/1-A	Method Blank	Total/NA	Water	351.2	
LCS 885-22060/3-A	Lab Control Sample	Total/NA	Water	351.2	
MRL 885-22060/2-A	Lab Control Sample	Total/NA	Water	351.2	

QC Association Summary

Client: EA Engineering
Project/Site: Del Oro Dairy

Job ID: 885-20902-1

General Chemistry

Analysis Batch: 22211

Lab Sample ID	Client Sample ID	Prep Type	Matrix	Method	Prep Batch
885-20902-1	EW-05	Total/NA	Water	351.2	22003
885-20902-3	EW-04	Total/NA	Water	351.2	22003
MB 885-22003/3-A	Method Blank	Total/NA	Water	351.2	22003
LCS 885-22003/5-A	Lab Control Sample	Total/NA	Water	351.2	22003
MRL 885-22003/4-A	Lab Control Sample	Total/NA	Water	351.2	22003
885-20902-3 MS	EW-04	Total/NA	Water	351.2	22003
885-20902-3 MSD	EW-04	Total/NA	Water	351.2	22003

Analysis Batch: 22271

Lab Sample ID	Client Sample ID	Prep Type	Matrix	Method	Prep Batch
885-20902-2	692-02	Total/NA	Water	351.2	22060
MB 885-22060/1-A	Method Blank	Total/NA	Water	351.2	22060
LCS 885-22060/3-A	Lab Control Sample	Total/NA	Water	351.2	22060
MRL 885-22060/2-A	Lab Control Sample	Total/NA	Water	351.2	22060

Lab Chronicle

Client: EA Engineering
Project/Site: Del Oro Dairy

Job ID: 885-20902-1

Client Sample ID: EW-05

Lab Sample ID: 885-20902-1

Date Collected: 03/04/25 12:43
Matrix: Water
Date Received: 03/05/25 10:10

Prep Type	Batch Type	Batch Method	Run	Dilution Factor	Batch Number	Analyst	Lab	Prepared or Analyzed
Total/NA	Analysis	300.0		10	21884	ES	EET ALB	03/05/25 17:55
Total/NA	Analysis	300.0		100	21883	ES	EET ALB	03/05/25 18:30
Total/NA	Analysis	2540C		1	22044	HR	EET ALB	03/07/25 09:34
Total/NA	Prep	351.2			22003	EH	EET ALB	03/06/25 11:35
Total/NA	Analysis	351.2		1	22211	EH	EET ALB	03/10/25 17:11

Client Sample ID: 692-02

Lab Sample ID: 885-20902-2

Date Collected: 03/04/25 14:17
Matrix: Water
Date Received: 03/05/25 10:10

Prep Type	Batch Type	Batch Method	Run	Dilution Factor	Batch Number	Analyst	Lab	Prepared or Analyzed
Total/NA	Analysis	300.0		10	21883	ES	EET ALB	03/05/25 18:42
Total/NA	Analysis	300.0		10	21884	ES	EET ALB	03/05/25 18:42
Total/NA	Analysis	300.0		100	21883	ES	EET ALB	03/05/25 18:54
Total/NA	Analysis	2540C		1	22044	HR	EET ALB	03/07/25 09:34
Total/NA	Prep	351.2			22060	EH	EET ALB	03/07/25 11:24
Total/NA	Analysis	351.2		1	22271	EH	EET ALB	03/11/25 13:44

Client Sample ID: EW-04

Lab Sample ID: 885-20902-3

Date Collected: 03/04/25 15:15
Matrix: Water
Date Received: 03/05/25 10:10

Prep Type	Batch Type	Batch Method	Run	Dilution Factor	Batch Number	Analyst	Lab	Prepared or Analyzed
Total/NA	Analysis	300.0		10	21884	ES	EET ALB	03/05/25 19:06
Total/NA	Analysis	300.0		100	21883	ES	EET ALB	03/05/25 19:18
Total/NA	Analysis	2540C		1	22044	HR	EET ALB	03/07/25 09:34
Total/NA	Prep	351.2			22003	EH	EET ALB	03/06/25 11:35
Total/NA	Analysis	351.2		1	22211	EH	EET ALB	03/10/25 17:15

Laboratory References:

EET ALB = Eurofins Albuquerque, 4901 Hawkins NE, Albuquerque, NM 87109, TEL (505)345-3975

Accreditation/Certification Summary

Client: EA Engineering
Project/Site: Del Oro Dairy

Job ID: 885-20902-1

Laboratory: Eurofins Albuquerque

All accreditations/certifications held by this laboratory are listed. Not all accreditations/certifications are applicable to this report.

Authority	Program	Identification Number	Expiration Date
Arizona	State	AZ0682	10-21-25
Texas	NELAP	T104704424-23-16	06-01-25

Chain-of-Custody Record

Client: EA Engineering, Science, and Technology

Mailing Address: 320 Gold Ave SW Suite

Phone # 505-715-4279

email or Fax#. rmullen@eaest com

QA/QC Package:
☐ Standard ☐ Level 4 (Full Validation)

Accreditation. ☐ Az Compliance
☐ NELAC ☐ Other_____
☐ EDD (Type) _____

Turn-Around Time:
☑ Standard ☐ Rush_____

Project Name: Del Oro Dairy

Project #: Billing Email lindaarmstrong@zianet.com

Project Manager: Gina Mullen

Sampler: Angel N. Rivera

On Ice: ☒ Yes ☐ No mgb

# of Coolers: 1

Cooler Temp(including CF): 0.2 ± 0 = 0.2

HALL ENVIRONMENTAL ANALYSIS LABOR

www hallenvironmental com

4901 Hawkins NE - Albuquerque, NM 871(

Tel. 505-345-3975 Fax 505-345-4107

885-20902 COC

Analysis Request

Date	Time	Matrix	Sample Name	Container Type and #	Preservative Type	HEAL No.	Nitrate/Nitrites EPA Method 300	TKN 351.2	Chloride EPA 300	TDS SM 2540 C MOD	Sulfate EPA 300		Phosphorus EPA 6010B	Total Sulfur							
3-4	12:43	Gw	EW-05	2			X	X	X	X	X										
3-4	14:17	Gw	692-02	2			X	X	X	X	X										
3-4	15:15	Gw	EW-04	2			X	X	X	X	X										

Date	Time	Relinquished by	Received by	Via	Date	Time
3-4	17:05	[signature]	[signature]	FedEx	3/5/25	10:10
Date	Time.	Relinquished by	Received by	Via	Date	Time

Remarks

If necessary, samples submitted to Hall Environmental may be subcontracted to other accredited laboratories. This serves as notice of this possibility Any sub-contracted data will be clearly notated on the analytical report.

Chain-of-Custody Record

Client: EA Engineering, Science, and Technology

Mailing Address: 320 Gold Ave SW Suite

Phone # 505-715-4279

email or Fax#. rmullen@eaest com

QA/QC Package:
☐ Standard ☐ Level 4 (Full Validation)

Accreditation. ☐ Az Compliance
☐ NELAC ☐ Other_____
☐ EDD (Type) _____

Turn-Around Time:
☑ Standard ☐ Rush_____

Project Name: Del Oro Dairy

Project #: Billing Email lindaarmstrong@zianet.com

Project Manager: Gina Mullen

Sampler: Angel N. Rivera

On Ice: ☒ Yes ☐ No mgb

# of Coolers: 1

Cooler Temp(including CF): 0.2 ± 0 = 0.2°C

HALL ENVIRONMENTAL ANALYSIS LABOR

www hallenvironmental com

4901 Hawkins NE - Albuquerque, NM 871(

Tel. 505-345-3975 Fax 505-345-4107

885-20902 COC

Analysis Request

Date	Time	Matrix	Sample Name	Container Type and #	Preservative Type	HEAL No.	Nitrate/Nitrites EPA Method 300	TKN 351.2	Chloride EPA 300	TDS SM 2540 C MOD	Sulfate EPA 300		Phosphorus EPA 6010B	Total Sulfur							
3-4	12:43	Gw	EW-05	2			X	X	X	X	X										
3-4	14:17	Gw	692-02	2			X	X	X	X	X										
3-4	15:15	Gw	EW-04	2			X	X	X	X	X										

Date	Time	Relinquished by	Received by	Via	Date	Time
3-4	17:05	[signature]	[signature]	FedEx	3/5/25	10:10
Date	Time.	Relinquished by	Received by	Via	Date	Time

Remarks

If necessary, samples submitted to Hall Environmental may be subcontracted to other accredited laboratories. This serves as notice of this possibility Any sub-contracted data will be clearly notated on the analytical report.

Chain-of-Custody Record

Client: EA Engineering, Science, and Technology

Mailing Address: 320 Gold Ave SW Suite

Phone # 505-715-4279

email or Fax#: rmullen@eaest.com

QA/QC Package:
☐ Standard ☐ Level 4 (Full Validation)

Accreditation: ☐ Az Compliance
☐ NELAC ☐ Other

☐ EDD (Type)

Turn-Around Time:
☑ Standard ☐ Rush

Project Name: Del Oro Dairy

Project #: Billing Email lindaarmstrong@zianet.com

Project Manager: Gina Mullen

Sampler: Angel N. Rivera

On Ice: X Yes ☐ No

# of Coolers: 1

Cooler Temp (including cf): 0.2 + 0 = 0.2°C

HALL ENVIRONMENTAL ANALYSIS LABOR

www.hallenvironmental.com

4901 Hawkins NE - Albuquerque, NM 871

Tel. 505-345-3975 Fax 505-345-4107 885-20902 COC

Analysis Request

Date	Time	Matrix	Sample Name	Container Type and #	Preservative Type	HEAL No.	Nitrate/Nitrites EPA Method 300	TKN 351.2	Chloride EPA 300	TDS SM 2540 C MOD	Sulfate EPA 300		Phosphorus EPA 6010B	Total Sulfur							
3-4	12:43	Gw	EW-05	2			X	X	X	X	X		GM								
3-4	14:17	Gw	692-02	2			X	X	X	X	X										
3-4	15:15	Gw	EW-04	2			X	X	X	X	X		GM								

Date	Time	Relinquished by	Received by	Via	Date	Time
3-4	17:05	[signature]	[signature]	FedEx	3/5/25	10:10
Date	Time.	Relinquished by	Received by	Via	Date	Time

Remarks

If necessary, samples submitted to Hall Environmental may be subcontracted to other accredited laboratories. This serves as notice of this possibility. Any sub-contracted data will be clearly notated on the analytical report.

Login Sample Receipt Checklist

Client: EA Engineering

Job Number: 885-20902-1

Login Number: 20902

List Source: Eurofins Albuquerque

List Number: 1

Creator: McQuiston, Steven

Question	Answer	Comment
The cooler's custody seal, if present, is intact.	True	
Sample custody seals, if present, are intact.	True	
The cooler or samples do not appear to have been compromised or tampered with.	True	
Samples were received on ice.	True	
Cooler Temperature is acceptable.	True	
Cooler Temperature is recorded.	True	
COC is present.	True	
COC is filled out in ink and legible.	True	
COC is filled out with all pertinent information.	True	
Is the Field Sampler's name present on COC?	True	
There are no discrepancies between the containers received and the COC.	True	
Samples are received within Holding Time (excluding tests with immediate HTs)	True	
Sample containers have legible labels.	True	
Containers are not broken or leaking.	True	
Sample collection date/times are provided.	True	
Appropriate sample containers are used.	True	
Sample bottles are completely filled.	True	
Sample Preservation Verified.	True	
There is sufficient vol. for all requested analyses, incl. any requested MS/MSDs	True	
Containers requiring zero headspace have no headspace or bubble is <6mm (1/4").	True	
TCEQ Mtd 1005 soil sample was frozen/delivered for prep within 48H of sampling.	N/A	

eurofins | Environment Testing

ANALYTICAL REPORT

PREPARED FOR

Attn: Regina Mullen
EA Engineering
320 Gold Ave SW
Suite 1210
Albuquerque, New Mexico 87102

Generated 3/17/2025 5:13:18 PM

JOB DESCRIPTION

Del Oro Dairy

JOB NUMBER

885-21141-1

Eurofins Albuquerque
4901 Hawkins NE
Albuquerque NM 87109

See page two for job notes and contact information.

Eurofins Albuquerque

Job Notes

The test results in this report relate only to the samples as received by the laboratory and will meet all requirements of the methodology, with any exceptions noted. This report shall not be reproduced except in full, without the express written approval of the laboratory. All questions should be directed to the Eurofins Environment Testing South Central, LLC Project Manager.

Authorization

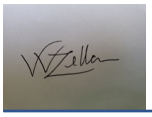

Generated
3/17/2025 5:13:18 PM

Authorized for release by
Victoria Zellar, Project Manager
Victoria.Zellar@et.eurofinsus.com
(505)345-3975

Table of Contents

Definitions/Glossary

Client: EA Engineering
Project/Site: Del Oro Dairy

Job ID: 885-21141-1

Qualifiers

General Chemistry

Qualifier	Qualifier Description
E	Result exceeded calibration range.

Glossary

Abbreviation	These commonly used abbreviations may or may not be present in this report.
☼	Listed under the "D" column to designate that the result is reported on a dry weight basis
%R	Percent Recovery
CFL	Contains Free Liquid
CFU	Colony Forming Unit
CNF	Contains No Free Liquid
DER	Duplicate Error Ratio (normalized absolute difference)
Dil Fac	Dilution Factor
DL	Detection Limit (DoD/DOE)
DL, RA, RE, IN	Indicates a Dilution, Re-analysis, Re-extraction, or additional Initial metals/anion analysis of the sample
DLC	Decision Level Concentration (Radiochemistry)
EDL	Estimated Detection Limit (Dioxin)
LOD	Limit of Detection (DoD/DOE)
LOQ	Limit of Quantitation (DoD/DOE)
MCL	EPA recommended "Maximum Contaminant Level"
MDA	Minimum Detectable Activity (Radiochemistry)
MDC	Minimum Detectable Concentration (Radiochemistry)
MDL	Method Detection Limit
ML	Minimum Level (Dioxin)
MPN	Most Probable Number
MQL	Method Quantitation Limit
NC	Not Calculated
ND	Not Detected at the reporting limit (or MDL or EDL if shown)
NEG	Negative / Absent
POS	Positive / Present
PQL	Practical Quantitation Limit
PRES	Presumptive
QC	Quality Control
RER	Relative Error Ratio (Radiochemistry)
RL	Reporting Limit or Requested Limit (Radiochemistry)
RPD	Relative Percent Difference, a measure of the relative difference between two points
TEF	Toxicity Equivalent Factor (Dioxin)
TEQ	Toxicity Equivalent Quotient (Dioxin)
TNTC	Too Numerous To Count

Job Narrative
885-21141-1

Analytical test results meet all requirements of the associated regulatory program listed on the Accreditation/Certification Summary Page unless otherwise noted under the individual analysis. Data qualifiers and/or narrative comments are included to explain any exceptions, if applicable.

- Matrix QC may not be reported if insufficient sample is provided or site-specific QC samples were not submitted. In these situations, to demonstrate precision and accuracy at a batch level, a LCS/LCSD may be performed, unless otherwise specified in the method.
- Surrogate and/or isotope dilution analyte recoveries (if applicable) which are outside of the QC window are confirmed unless attributed to a dilution or otherwise noted in the narrative.

Regulated compliance samples (e.g. SDWA, NPDES) must comply with the associated agency requirements/permits.

Receipt
The samples were received on 3/8/2025 9:15 AM. Unless otherwise noted below, the samples arrived in good condition, and, where required, properly preserved and on ice. The temperature of the cooler at receipt time was 0.3°C.

HPLC/IC
No additional analytical or quality issues were noted, other than those described above or in the Definitions/ Glossary page.

General Chemistry
Method 2540C_SingleDry: The analysis volume selected for the following samples produced a base result greater than 200mg before calculation of the final result: EW-02 (885-21141-2) and (885-21141-A-2 DU). Reanalysis could not be performed due to, holding time exceedance. Visual inspection by analyst shows no signs of trapped moisture, report as is.

No additional analytical or quality issues were noted, other than those described above or in the Definitions/ Glossary page.

Client Sample Results

Client: EA Engineering
Project/Site: Del Oro Dairy

Job ID: 885-21141-1

Client Sample ID: EW-01

Lab Sample ID: 885-21141-1

Date Collected: 03/07/25 09:15

Matrix: Water

Date Received: 03/08/25 09:15

Method: EPA 300.0 - Anions, Ion Chromatography

Analyte	Result	Qualifier	RL		Unit	D	Prepared	Analyzed	Dil Fac
Chloride	520		50		mg/L			03/11/25 16:04	100
Nitrate Nitrite as N	20		1.0		mg/L			03/11/25 21:04	5

General Chemistry

Analyte	Result	Qualifier	RL		Unit	D	Prepared	Analyzed	Dil Fac
Total Dissolved Solids (SM 2540C)	1700		50		mg/L			03/11/25 14:50	1
Nitrogen, Total Kjeldahl (EPA 351.2)	ND		0.50		mg/L		03/11/25 11:57	03/12/25 14:35	1

Client Sample Results

Client: EA Engineering
Project/Site: Del Oro Dairy

Job ID: 885-21141-1

Client Sample ID: EW-02

Date Collected: 03/07/25 10:52
Date Received: 03/08/25 09:15

Lab Sample ID: 885-21141-2

Matrix: Water

Method: EPA 300.0 - Anions, Ion Chromatography

Analyte	Result	Qualifier	RL		Unit	D	Prepared	Analyzed	Dil Fac
Chloride	970		50		mg/L			03/11/25 17:06	100
Nitrate Nitrite as N	140		10		mg/L			03/15/25 03:50	50

General Chemistry

Analyte	Result	Qualifier	RL		Unit	D	Prepared	Analyzed	Dil Fac
Total Dissolved Solids (SM 2540C)	3500	E	50		mg/L			03/11/25 14:50	1
Nitrogen, Total Kjeldahl (EPA 351.2)	ND		0.50		mg/L		03/11/25 11:57	03/12/25 14:37	1

QC Sample Results

Client: EA Engineering
Project/Site: Del Oro Dairy

Job ID: 885-21141-1

Method: 300.0 - Anions, Ion Chromatography

Lab Sample ID: MB 885-22214/4 — **Client Sample ID: Method Blank**
Matrix: Water — **Prep Type: Total/NA**
Analysis Batch: 22214

Analyte	MB Result	MB Qualifier	RL		Unit	D	Prepared	Analyzed	Dil Fac
Chloride	ND		0.50		mg/L			03/11/25 12:06	1

Lab Sample ID: LCS 885-22214/5 — **Client Sample ID: Lab Control Sample**
Matrix: Water — **Prep Type: Total/NA**
Analysis Batch: 22214

Analyte			Spike Added	LCS Result	LCS Qualifier	Unit	D	%Rec	%Rec Limits		
Chloride			5.00	5.12		mg/L		102	90 - 110		

Lab Sample ID: MRL 885-22214/59 — **Client Sample ID: Lab Control Sample**
Matrix: Water — **Prep Type: Total/NA**
Analysis Batch: 22214

Analyte			Spike Added	MRL Result	MRL Qualifier	Unit	D	%Rec	%Rec Limits		
Chloride			0.500	0.548		mg/L		110	50 - 150		

Lab Sample ID: MB 885-22215/4 — **Client Sample ID: Method Blank**
Matrix: Water — **Prep Type: Total/NA**
Analysis Batch: 22215

Analyte	MB Result	MB Qualifier	RL		Unit	D	Prepared	Analyzed	Dil Fac
Nitrate Nitrite as N	ND		0.20		mg/L			03/11/25 12:06	1

Lab Sample ID: LCS 885-22215/5 — **Client Sample ID: Lab Control Sample**
Matrix: Water — **Prep Type: Total/NA**
Analysis Batch: 22215

Analyte			Spike Added	LCS Result	LCS Qualifier	Unit	D	%Rec	%Rec Limits		
Nitrate			2.50	2.72		mg/L		109	90 - 110		
Nitrite			1.00	1.01		mg/L		101	90 - 110		

Lab Sample ID: MRL 885-22215/59 — **Client Sample ID: Lab Control Sample**
Matrix: Water — **Prep Type: Total/NA**
Analysis Batch: 22215

Analyte			Spike Added	MRL Result	MRL Qualifier	Unit	D	%Rec	%Rec Limits		
Nitrate			0.100	0.108		mg/L		108	50 - 150		
Nitrite			0.100	0.107		mg/L		107	50 - 150		

Lab Sample ID: 885-21141-1 MS — **Client Sample ID: EW-01**
Matrix: Water — **Prep Type: Total/NA**
Analysis Batch: 22215

Analyte	Sample Result	Sample Qualifier	Spike Added	MS Result	MS Qualifier	Unit	D	%Rec	%Rec Limits		
Nitrate	20		25.0	49.6		mg/L		119	80 - 120		
Nitrite	ND		10.0	10.0		mg/L		100	80 - 120		

Method: 300.0 - Anions, Ion Chromatography (Continued)

Lab Sample ID: 885-21141-1 MSD — **Client Sample ID: EW-01**
Matrix: Water — **Prep Type: Total/NA**
Analysis Batch: 22215

Analyte	Sample Result	Sample Qualifier	Spike Added	MSD Result	MSD Qualifier	Unit	D	%Rec	%Rec Limits	RPD	RPD Limit
Nitrate	20		25.0	49.2		mg/L		117	80 - 120	1	20
Nitrite	ND		10.0	9.91		mg/L		99	80 - 120	1	20

Lab Sample ID: MB 885-22530/4 — **Client Sample ID: Method Blank**
Matrix: Water — **Prep Type: Total/NA**
Analysis Batch: 22530

Analyte	MB Result	MB Qualifier	RL	Unit	D	Prepared	Analyzed	Dil Fac
Nitrate Nitrite as N	ND		0.20	mg/L			03/14/25 15:19	1

Lab Sample ID: LCS 885-22530/5 — **Client Sample ID: Lab Control Sample**
Matrix: Water — **Prep Type: Total/NA**
Analysis Batch: 22530

Analyte	Spike Added	LCS Result	LCS Qualifier	Unit	D	%Rec	%Rec Limits
Nitrate	2.50	2.71		mg/L		108	90 - 110
Nitrite	1.00	1.03		mg/L		103	90 - 110

Lab Sample ID: MRL 885-22530/3 — **Client Sample ID: Lab Control Sample**
Matrix: Water — **Prep Type: Total/NA**
Analysis Batch: 22530

Analyte	Spike Added	MRL Result	MRL Qualifier	Unit	D	%Rec	%Rec Limits
Nitrate	0.100	0.110		mg/L		110	50 - 150
Nitrite	0.100	0.103		mg/L		103	50 - 150

Method: 2540C - Solids, Total Dissolved (TDS)

Lab Sample ID: MB 885-22254/1 — **Client Sample ID: Method Blank**
Matrix: Water — **Prep Type: Total/NA**
Analysis Batch: 22254

Analyte	MB Result	MB Qualifier	RL	Unit	D	Prepared	Analyzed	Dil Fac
Total Dissolved Solids	ND		50	mg/L			03/11/25 14:50	1

Lab Sample ID: LCS 885-22254/2 — **Client Sample ID: Lab Control Sample**
Matrix: Water — **Prep Type: Total/NA**
Analysis Batch: 22254

Analyte	Spike Added	LCS Result	LCS Qualifier	Unit	D	%Rec	%Rec Limits
Total Dissolved Solids	1000	1020		mg/L		102	80 - 120

Lab Sample ID: 885-21141-2 DU — **Client Sample ID: EW-02**
Matrix: Water — **Prep Type: Total/NA**
Analysis Batch: 22254

Analyte	Sample Result	Sample Qualifier	DU Result	DU Qualifier	Unit	D	RPD	RPD Limit
Total Dissolved Solids	3500	E	3380	E	mg/L		4	10

QC Sample Results

Client: EA Engineering
Project/Site: Del Oro Dairy

Job ID: 885-21141-1

Method: 351.2 - Nitrogen, Total Kjeldahl

Lab Sample ID: MB 885-22237/3-A
Matrix: Water
Analysis Batch: 22354

Client Sample ID: Method Blank
Prep Type: Total/NA
Prep Batch: 22237

Analyte	MB Result	MB Qualifier	RL		Unit	D	Prepared	Analyzed	Dil Fac
Nitrogen, Total Kjeldahl	ND		0.50		mg/L		03/11/25 11:57	03/12/25 13:59	1

Lab Sample ID: LCS 885-22237/5-A
Matrix: Water
Analysis Batch: 22354

Client Sample ID: Lab Control Sample
Prep Type: Total/NA
Prep Batch: 22237

Analyte			Spike Added	LCS Result	LCS Qualifier	Unit	D	%Rec	%Rec Limits		
Nitrogen, Total Kjeldahl			10.0	9.95		mg/L		99	90 - 110		

Lab Sample ID: MRL 885-22237/4-A
Matrix: Water
Analysis Batch: 22354

Client Sample ID: Lab Control Sample
Prep Type: Total/NA
Prep Batch: 22237

Analyte			Spike Added	MRL Result	MRL Qualifier	Unit	D	%Rec	%Rec Limits		
Nitrogen, Total Kjeldahl			0.500	0.500		mg/L		100	50 - 150		

QC Association Summary

Client: EA Engineering
Project/Site: Del Oro Dairy

Job ID: 885-21141-1

HPLC/IC

Analysis Batch: 22214

Lab Sample ID	Client Sample ID	Prep Type	Matrix	Method	Prep Batch
885-21141-1	EW-01	Total/NA	Water	300.0	
885-21141-2	EW-02	Total/NA	Water	300.0	
MB 885-22214/4	Method Blank	Total/NA	Water	300.0	
LCS 885-22214/5	Lab Control Sample	Total/NA	Water	300.0	
MRL 885-22214/59	Lab Control Sample	Total/NA	Water	300.0	

Analysis Batch: 22215

Lab Sample ID	Client Sample ID	Prep Type	Matrix	Method	Prep Batch
885-21141-1	EW-01	Total/NA	Water	300.0	
MB 885-22215/4	Method Blank	Total/NA	Water	300.0	
LCS 885-22215/5	Lab Control Sample	Total/NA	Water	300.0	
MRL 885-22215/59	Lab Control Sample	Total/NA	Water	300.0	
885-21141-1 MS	EW-01	Total/NA	Water	300.0	
885-21141-1 MSD	EW-01	Total/NA	Water	300.0	

Analysis Batch: 22530

Lab Sample ID	Client Sample ID	Prep Type	Matrix	Method	Prep Batch
885-21141-2	EW-02	Total/NA	Water	300.0	
MB 885-22530/4	Method Blank	Total/NA	Water	300.0	
LCS 885-22530/5	Lab Control Sample	Total/NA	Water	300.0	
MRL 885-22530/3	Lab Control Sample	Total/NA	Water	300.0	

General Chemistry

Prep Batch: 22237

Lab Sample ID	Client Sample ID	Prep Type	Matrix	Method	Prep Batch
885-21141-1	EW-01	Total/NA	Water	351.2	
885-21141-2	EW-02	Total/NA	Water	351.2	
MB 885-22237/3-A	Method Blank	Total/NA	Water	351.2	
LCS 885-22237/5-A	Lab Control Sample	Total/NA	Water	351.2	
MRL 885-22237/4-A	Lab Control Sample	Total/NA	Water	351.2	

Analysis Batch: 22254

Lab Sample ID	Client Sample ID	Prep Type	Matrix	Method	Prep Batch
885-21141-1	EW-01	Total/NA	Water	2540C	
885-21141-2	EW-02	Total/NA	Water	2540C	
MB 885-22254/1	Method Blank	Total/NA	Water	2540C	
LCS 885-22254/2	Lab Control Sample	Total/NA	Water	2540C	
885-21141-2 DU	EW-02	Total/NA	Water	2540C	

Analysis Batch: 22354

Lab Sample ID	Client Sample ID	Prep Type	Matrix	Method	Prep Batch
885-21141-1	EW-01	Total/NA	Water	351.2	22237
885-21141-2	EW-02	Total/NA	Water	351.2	22237
MB 885-22237/3-A	Method Blank	Total/NA	Water	351.2	22237
LCS 885-22237/5-A	Lab Control Sample	Total/NA	Water	351.2	22237
MRL 885-22237/4-A	Lab Control Sample	Total/NA	Water	351.2	22237

Lab Chronicle

Client: EA Engineering
Project/Site: Del Oro Dairy

Job ID: 885-21141-1

Client Sample ID: EW-01

Lab Sample ID: 885-21141-1

Date Collected: 03/07/25 09:15

Matrix: Water

Date Received: 03/08/25 09:15

Prep Type	Batch Type	Batch Method	Run	Dilution Factor	Batch Number	Analyst	Lab	Prepared or Analyzed
Total/NA	Analysis	300.0		100	22214	ES	EET ALB	03/11/25 16:04
Total/NA	Analysis	300.0		5	22215	ES	EET ALB	03/11/25 21:04
Total/NA	Analysis	2540C		1	22254	HR	EET ALB	03/11/25 14:50
Total/NA	Prep	351.2			22237	EH	EET ALB	03/11/25 11:57
Total/NA	Analysis	351.2		1	22354	EH	EET ALB	03/12/25 14:35

Client Sample ID: EW-02

Lab Sample ID: 885-21141-2

Date Collected: 03/07/25 10:52

Matrix: Water

Date Received: 03/08/25 09:15

Prep Type	Batch Type	Batch Method	Run	Dilution Factor	Batch Number	Analyst	Lab	Prepared or Analyzed
Total/NA	Analysis	300.0		50	22530	RC	EET ALB	03/15/25 03:50
Total/NA	Analysis	300.0		100	22214	ES	EET ALB	03/11/25 17:06
Total/NA	Analysis	2540C		1	22254	HR	EET ALB	03/11/25 14:50
Total/NA	Prep	351.2			22237	EH	EET ALB	03/11/25 11:57
Total/NA	Analysis	351.2		1	22354	EH	EET ALB	03/12/25 14:37

Laboratory References:

EET ALB = Eurofins Albuquerque, 4901 Hawkins NE, Albuquerque, NM 87109, TEL (505)345-3975

Accreditation/Certification Summary

Client: EA Engineering
Project/Site: Del Oro Dairy

Job ID: 885-21141-1

Laboratory: Eurofins Albuquerque

Unless otherwise noted, all analytes for this laboratory were covered under each accreditation/certification below.

Authority	Program	Identification Number	Expiration Date
New Mexico	State	NM9425, NM0901	02-27-26

The following analytes are included in this report, but the laboratory is not certified by the governing authority. This list may include analytes for which the agency does not offer certification.

Analysis Method	Prep Method	Matrix	Analyte
2540C		Water	Total Dissolved Solids
300.0		Water	Chloride
300.0		Water	Nitrate Nitrite as N
351.2	351.2	Water	Nitrogen, Total Kjeldahl

Oregon	NELAP	NM100001	02-26-26

The following analytes are included in this report, but the laboratory is not certified by the governing authority. This list may include analytes for which the agency does not offer certification.

Analysis Method	Prep Method	Matrix	Analyte
351.2	351.2	Water	Nitrogen, Total Kjeldahl

Chain-of-Custody Record

Client: EA Engineering, Science, and Technology

Mailing Address: 320 Gold Ave SW Suite

Phone # 505-715-4279

email or Fax# rmullen@eaest com

QA/QC Package:
☐ Standard ☐ Level 4 (Full Validation)

Accreditation: ☐ Az Compliance
☐ NELAC ☐ Other
☐ EDD (Type)

Turn-Around Time:
☑ Standard ☐ Rush

Project Name: Del Oro Dairy

Project #:

Billing Email: Lindaarmstrong@zianet.com

Project Manager: Gina Mullen

Sampler: Angel N Rivera

On Ice: ☑ Yes ☐ No

# of Coolers: 1

Cooler Temp (including CF): 0.1+0.2=0.3°C

HALL ENVIRONMENTAL ANALYSIS LABORATORY
www.hallenvironmental.com
4901 Hawkins NE - Albuquerque, NM 87109
Tel. 505-345-3975 Fax 505-345-4107

885-21141 COC

Analysis Request

Date	Time	Matrix	Sample Name	Container Type and #	Preservative Type	HEAL No.	Nitrate/Nitrites EPA Method 300	TKN 351.2	Chloride EPA 300	TDS SM 2540 C MOD	Sulfate EPA 300		Phosphorus EPA 6010B	Total Sulfur							
3-7	9:15	GW	EW-01	2			X	X	X	X	X										
3-7	10:52	GW	EW-02	2			X	X	X	X	X										

Date	Time	Relinquished by	Received by	Via	Date	Time
3-7	16:00	[signature]	Scott	UPS	3/8/25	0915
Date	Time	Relinquished by	Received by	Via	Date	Time

Remarks:

If necessary, samples submitted to Hall Environmental may be subcontracted to other accredited laboratories This serves as notice of this possibility Any sub-contracted data will be clearly notated on the analytical report.

Chain-of-Custody Record

Client: EA Engineering, Science, and Technology

Mailing Address: 320 Gold Ave SW Suite

Phone # 505-715-4279

email or Fax# rmullen@eaest com

QA/QC Package: ☐ Standard ☐ Level 4 (Full Validation)

Accreditation: ☐ Az Compliance ☐ NELAC ☐ Other ____

☐ EDD (Type) ____

Turn-Around Time: ☑ Standard ☐ Rush ____

Project Name: Del Oro Dairy

Project #: Billing Email Lindaarmstrong@zianet.com

Project Manager: Gina Mullen

Sampler: Angel N Rivera

On Ice: ☑ Yes ☐ No

# of Coolers: 1 MOTO

Cooler Temp (including CF): 0.1+0.2=0.3°C

HALL ENVIRONMENTAL ANALYSIS LABORATORY

www.hallenvironmental.com

4901 Hawkins NE - Albuquerque, NM 87109

Tel. 505-345-3975 Fax 505-345-4107

885-21141 COC

Analysis Request

Date	Time	Matrix	Sample Name	Container Type and #	Preservative Type	HEAL No.	Nitrate/Nitrites EPA Method 300	TKN 351.2	Chloride EPA 300	TDS SM 2540 C MOD	Sulfate EPA 300		Phosphorus EPA 6010B	Total Sulfur							
3-7	9:15	GW	EW-01	2			X	X	X	X	X										
3-7	10:52	GW	EW-02	2			X	X	X	X	X										

Date	Time	Relinquished by	Received by	Via	Date	Time
3-7	16:00	[signature]	Scott	UPS	3/8/25	0915
Date	Time	Relinquished by	Received by	Via	Date	Time

Remarks:

If necessary, samples submitted to Hall Environmental may be subcontracted to other accredited laboratories This serves as notice of this possibility Any sub-contracted data will be clearly notated on the analytical report.

Chain-of-Custody Record

Client.

EA Engineering, Science, and Technology

Mailing Address:

320 Gold Ave SW Suite

Phone # 505-715-4279

email or Fax# rmullen@eaest com

QA/QC Package.

☐ Standard ☐ Level 4 (Full Validation)

Accreditation: ☐ Az Compliance

☐ NELAC ☐ Other_____

☐ EDD (Type) _____

Turn-Around Time:

☑ Standard ☐ Rush_____

Project Name.

Del Oro Dairy

Project #: Billing Email

Lindaarmstrong@zianet.com

Project Manager:

Gina Mullen

Sampler. Angel N Rivera

On Ice: ☑ Yes ☐ No

# of Coolers: 1

Cooler Temp (including CF): 0.1 +0.2=0.3°C

HALL ENVIRONMENTAL ANALYSIS LABORATORY

www.hallenvironmental.com

4901 Hawkins NE - Albuquerque, NM 8710

Tel. 505-345-3975 Fax 505-345-4107

885-21141 COC

Analysis Request

Date	Time	Matrix	Sample Name	Container Type and #	Preservative Type	HEAL No.	Nitrate/Nitrites EPA Method 300	TKN 351.2	Chloride EPA 300	TDS SM 2540 C MOD	Sulfate EPA 300		Phosphorus EPA 6010B	Total Sulfur							
3-7	9:15	GW	EW-01	2			X	X	X	X	X										
3-7	10:52	GW	EW-02	2			X	X	X	X	X										

Date	Time	Relinquished by	Received by	Via	Date	Time
3-7	16:00	[signature]	SCM	UPS	3/8/25	0915
Date	Time	Relinquished by	Received by	Via	Date	Time

Remarks:

If necessary, samples submitted to Hall Environmental may be subcontracted to other accredited laboratories This serves as notice of this possibility Any sub-contracted data will be clearly notated on the analytical report.

Login Sample Receipt Checklist

Client: EA Engineering

Job Number: 885-21141-1

Login Number: 21141
List Number: 1
Creator: McQuiston, Steven

List Source: Eurofins Albuquerque

Question	Answer	Comment
The cooler's custody seal, if present, is intact.	True	
Sample custody seals, if present, are intact.	True	
The cooler or samples do not appear to have been compromised or tampered with.	True	
Samples were received on ice.	True	
Cooler Temperature is acceptable.	True	
Cooler Temperature is recorded.	True	
COC is present.	True	
COC is filled out in ink and legible.	True	
COC is filled out with all pertinent information.	True	
Is the Field Sampler's name present on COC?	True	
There are no discrepancies between the containers received and the COC.	True	
Samples are received within Holding Time (excluding tests with immediate HTs)	True	
Sample containers have legible labels.	True	
Containers are not broken or leaking.	True	
Sample collection date/times are provided.	True	
Appropriate sample containers are used.	True	
Sample bottles are completely filled.	True	
Sample Preservation Verified.	True	
There is sufficient vol. for all requested analyses, incl. any requested MS/MSDs	True	
Containers requiring zero headspace have no headspace or bubble is <6mm (1/4").	True	
TCEQ Mtd 1005 soil sample was frozen/delivered for prep within 48H of sampling.	N/A	

ATTACHMENT 3 – CONCENTRATION TRENDS FOR DEL ORO EXTRACTION WELLS AND ABATEMENT PLAN MONITORING WELLS IN THE PERCHED AQUIFER

NITRATE CONCENTRATION TRENDS
DEL ORO EXTRACTION WELLS AND ABATEMENT PLAN MONITORING WELLS
IN THE PERCHED AQUIFER
DONA ANA DAIRIES, DONA ANA COUNTY, NEW MEXICO

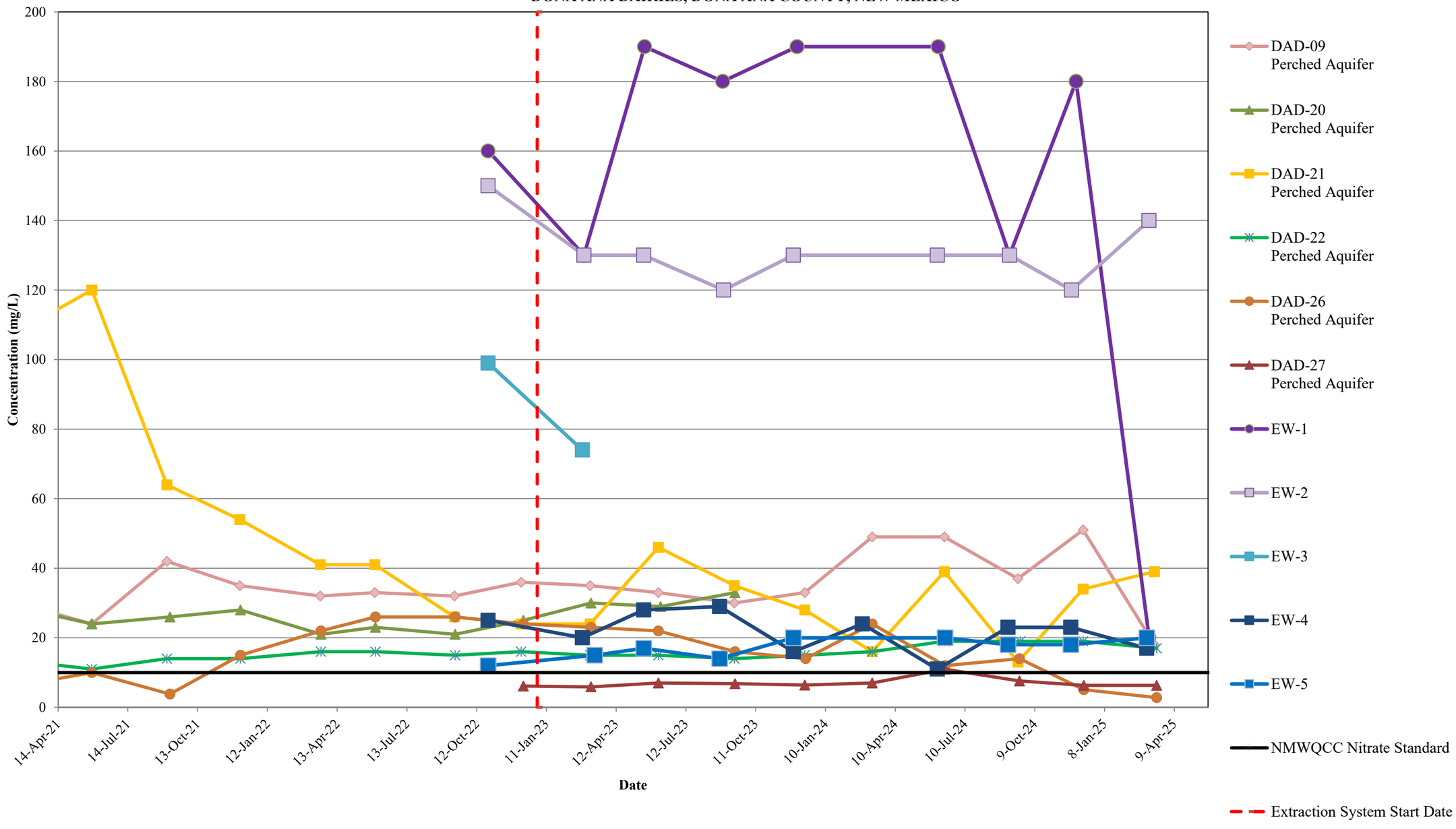

CHLORIDE CONCENTRATION TRENDS
DEL ORO EXTRACTION WELLS AND ABATEMENT PLAN MONITORING WELLS
IN THE PERCHED AQUIFER
DONA ANA DAIRIES, DONA ANA COUNTY, NEW MEXICO

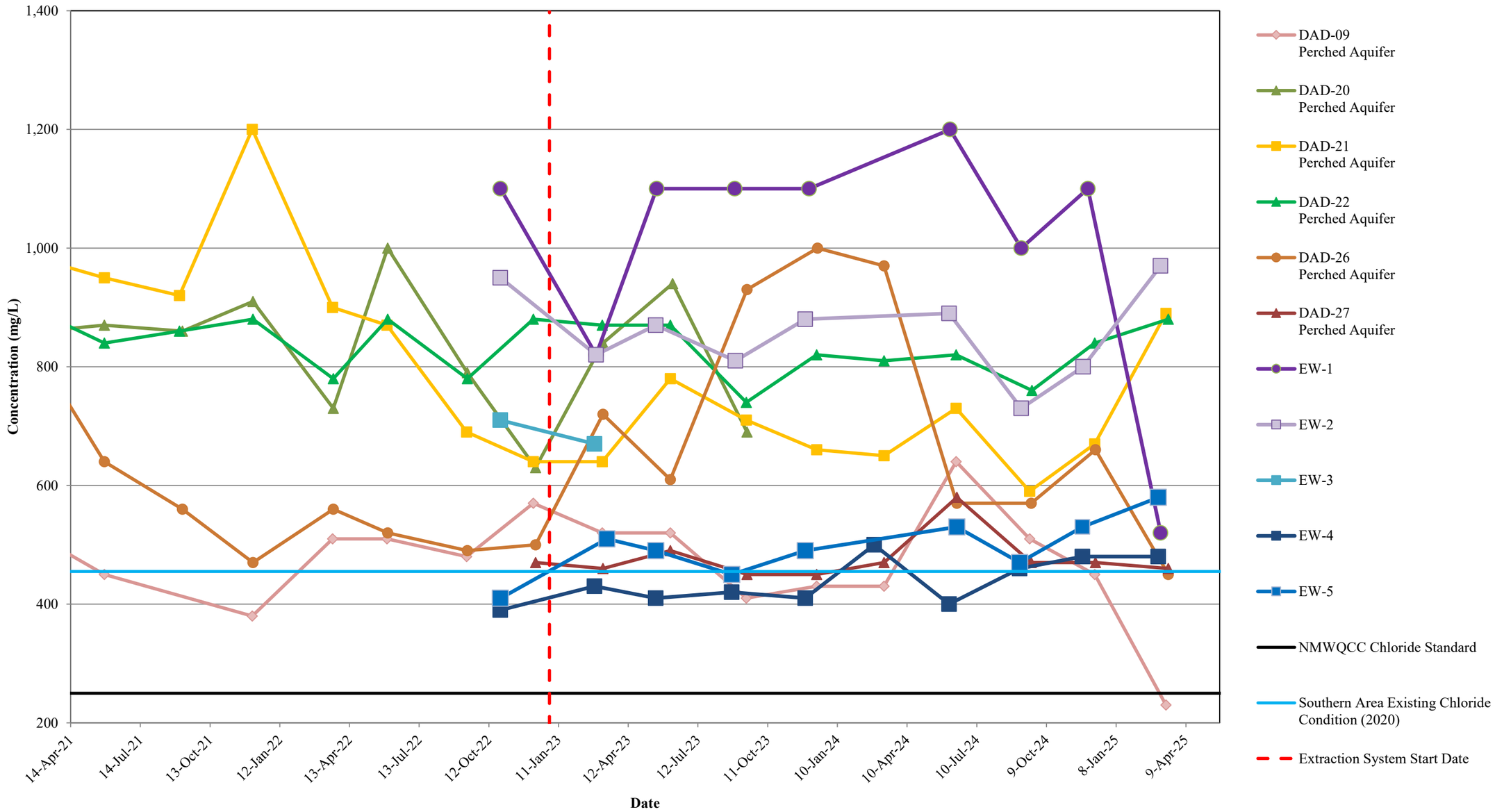

TDS CONCENTRATION TRENDS
DEL ORO EXTRACTION WELLS AND ABATEMENT PLAN MONITORING WELLS
IN THE PERCHED AQUIFER
DONA ANA DAIRIES, DONA ANA COUNTY, NEW MEXICO