Environmental Services
790 South Buchanan Street, Floor 5
Amarillo, TX 79101

February 28, 2025

New Mexico Environment Department
Air Quality Bureau
Permit Section
525 Camino de los Marquez, Suite 1
Santa Fe, NM 87505-1816

CERTIFIED MAIL: 9589 0710 5270 0707 5978 86

Re: Application for Title V Permit Renewal P008-R4M1
Application for Acid Rain Permit Renewal P008AR4
Southwestern Public Service Company
Maddox Station Power Plant

To whom it may concern,

On behalf of Southwestern Public Service Company, enclosed is an application for a Renewal of Permits P008-R4M1 and P008AR4 at Maddox Station Power Plant. As required by instructions on the current forms, we are submitting an original and two copies of the application package. We will submit required electronic copies of the application once NMED emails instructions, as listed in Section 1-I of the Submittal Requirements.

If there are any questions regarding this application, please contact me at (806) 513-1499 or via email at Valerie.A.Litwinick@xcelenergy.com.

Sincerely,

V Litwinick

Valerie Litwinick
Environmental Analyst

cc: Octavio Nayares, Xcel Energy
USEPA Region 6, Dallas (via email R6AirPermits@epa.gov)

Mail Application To:		**For Department use only:**
New Mexico Environment Department Air Quality Bureau Permits Section 525 Camino de los Marquez, Suite 1 Santa Fe, New Mexico, 87505 Phone: (505) 476-4300 Fax: (505) 476-4375 www.env.nm.gov/aqb		AIRS No.:

Universal Air Quality Permit Application

Use this application for NOI, NSR, or Title V sources.

Use this application for: the initial application, modifications, technical revisions, and renewals. For technical revisions, complete Sections, 1-A, 1-B, 2-E, 3, 9 and any other sections that are relevant to the requested action; coordination with the Air Quality Bureau permit staff prior to submittal is encouraged to clarify submittal requirements and to determine if more or less than these sections of the application are needed. Use this application for streamline permits as well. See Section 1-I for submittal instructions.

This application is submitted as (check all that apply): ☐ Request for a No Permit Required Determination (no fee)
X Updating an application currently under NMED review. Include this page and all pages that are being updated (no fee required).
Construction Status: ☐ Not Constructed ☐ Existing Permitted (or NOI) Facility ☐ Existing Non-permitted (or NOI) Facility
Minor Source: ☐ a NOI 20.2.73 NMAC ☐ 20.2.72 NMAC application or revision ☐ 20.2.72.300 NMAC Streamline application
Title V Source: ☐ Title V (new) **X** Title V renewal ☐ TV minor mod. ☐ TV significant mod. TV Acid Rain: ☐ New **X** Renewal
PSD Major Source: ☐ PSD major source (new) ☐ minor modification to a PSD source ☐ a PSD major modification

Acknowledgements:
X I acknowledge that a pre-application meeting is available to me upon request. ☒ Title V Operating, Title IV Acid Rain, and NPR applications have no fees.
☐ $500 NSR application Filing Fee enclosed OR ☐ The full permit fee associated with 10 fee points (required w/ streamline applications).
☐ Check No.: in the amount of
☐ I acknowledge the required submittal format for the hard copy application is printed double sided 'head-to-toe', 2-hole punched (except the Sect. 2 landscape tables is printed 'head-to-head'), numbered tab separators. Incl. a copy of the check on a separate page.
☐ This facility qualifies to receive assistance from the Small Business Environmental Assistance program (SBEAP) and qualifies for 50% of the normal application and permit fees. Enclosed is a check for 50% of the normal application fee which will be verified with the Small Business Certification Form for your company.
☐ This facility qualifies to receive assistance from the Small Business Environmental Assistance Program (SBEAP) but does not qualify for 50% of the normal application and permit fees. To see if you qualify for SBEAP assistance and for the small business certification form go to https://www.env.nm.gov/aqb/sbap/small_business_criteria.html).

Citation: Please provide the **low level citation** under which this application is being submitted: **20.2.70.200.C NMAC**
(e.g. application for a new minor source would be 20.2.72.200.A NMAC, one example for a Technical Permit Revision is 20.2.72.219.B.1.b NMAC, a Title V acid rain application would be: 20.2.70.200.C NMAC)

Section 1 – Facility Information

Section 1-A: Company Information

		AI # if known (see 1st 3 to 5 #s of permit IDEA ID No.): 588	Updating Permit/NOI #: P008R4M1
1	Facility Name: Maddox Station Power Plant	Plant primary SIC Code (4 digits): 4911 Plant NAIC code (6 digits): 221112	
a	Facility Street Address (If no facility street address, provide directions from a prominent landmark): 8 miles west on Highway 62 from Hobbs, NM		
2	Plant Operator Company Name: Southwestern Public Service Company	Phone/Fax: 1-800-750-2520	
a	Plant Operator Address: 790 S. Buchanan St., Amarillo, TX 79101		
b	Plant Operator's New Mexico Corporate ID or Tax ID: 75-0575400		

3	Plant Owner(s) name(s): Southwestern Public Service Company	Phone/Fax: 806-750-2520
a	Plant Owner(s) Mailing Address(s): 790 S. Buchanan St., Amarillo, TX 79101	
4	Bill To (Company): Xcel Energy	Phone/Fax: 806-378-2185
a	Mailing Address: 790 S. Buchanan St., Amarillo, TX 79101	E-mail: Valerie.A.Litwinick@xcelenergy.com
5	☒ Preparer: Valerie Litwinick ☐ Consultant:	Phone/Fax: 806-513-1499
a	Mailing Address: 790 S. Buchanan St., Amarillo, TX 79101	E-mail: Valerie.A.Litwinick@xcelenergy.com
6	Plant Operator Contact: Jon Calcote	Phone/Fax: 806-383-1006
a	Address: PO Box 1650, Hobbs, NM 88241	E-mail: Jon.Calcote@xcelenergy.com
7	Air Permit Contact: Valerie Litwinick	Title: Environmental Analyst
Q	E-mail: Valerie.A.Litwinick@xcelenergy.com	Phone/Fax: 806-513-1499
b	Mailing Address: 790 S. Buchanan St., Amarillo, TX 79101	
c	The designated Air permit Contact will receive all official correspondence (i.e. letters, permits) from the Air Quality Bureau.	

Section 1-B: Current Facility Status

1.a	Has this facility already been constructed? ☒ Yes ☐ No	1.b If yes to question 1.a, is it currently operating in New Mexico? ☒ Yes ☐ No
2	If yes to question 1.a, was the existing facility subject to a Notice of Intent (NOI) (20.2.73 NMAC) before submittal of this application? ☐ Yes **X** No	If yes to question 1.a, was the existing facility subject to a construction permit (20.2.72 NMAC) before submittal of this application? ☒ Yes ☐ No
3	Is the facility currently shut down? ☐ Yes ☒ No	If yes, give month and year of shut down (MM/YY):
4	Was this facility constructed before 8/31/1972 and continuously operated since 1972? ☒ Yes ☐ No	
5	If Yes to question 3, has this facility been modified (see 20.2.72.7.P NMAC) or the capacity increased since 8/31/1972? ☐ Yes ☐No ☐N/A	
6	Does this facility have a Title V operating permit (20.2.70 NMAC)? ☒ Yes ☐ No	If yes, the permit No. is: P-008R4M1
7	Has this facility been issued a No Permit Required (NPR)? ☐ Yes ☒ No	If yes, the NPR No. is:
8	Has this facility been issued a Notice of Intent (NOI)? ☐ Yes ☒ No	If yes, the NOI No. is:
9	Does this facility have a construction permit (20.2.72/20.2.74 NMAC)? ☒ Yes ☐ No	If yes, the permit No. is: 747M1R1
10	Is this facility registered under a General permit (GCP-1, GCP-2, etc.)? ☐ Yes ☒ No	If yes, the register No. is:

Section 1-C: Facility Input Capacity & Production Rate

1	What is the facility's maximum input capacity, specify units (reference here and list capacities in Section 20, if more room is required)			
a	Current	Hourly: 2,682 mmBtu	Daily: 64,368 mmBtu	Annually: 23,494,320 mmBtu
b	Proposed	Hourly: 2,682 mmBtu	Daily: 64,368 mmBtu	Annually: 23,494,320 mmBtu
2	What is the facility's maximum production rate, specify units (reference here and list capacities in Section 20, if more room is required)			
a	Current	Hourly: 242 MW	Daily: 4,788 MW	Annually: 1,375,485 MW
b	Proposed	Hourly: 242 MW	Daily: 4,788 MW	Annually: 1,375,485 MW

Section 1-D: Facility Location Information

1	Section: 25	Range: 36E	Township: 18S	County: Lea	Elevation (ft): 3,760
2	UTM Zone: ☐ 12 or ☒ 13			Datum: ☐ NAD 27 ☐ NAD 83 ☒ WGS 84	
a	UTM E (in meters, to nearest 10 meters): 659180			UTM N (in meters, to nearest 10 meters): 3620900	
b	**AND** Latitude (deg., min., sec.): 32 deg. 42 min. 47 sec.			Longitude (deg., min., sec.): 103 deg. 18 min. 36 sec.	
3	Name and zip code of nearest New Mexico town: Hobbs 88241				
4	Detailed Driving Instructions from nearest NM town (attach a road map if necessary): 8 miles west on Highway 62 from Hobbs, NM. Facility is north of Highway 62. There is a sign on the highway.				
5	The facility is 8 (distance) miles West (direction) of Hobbs, NM (nearest town).				
6	Status of land at facility (check one): ☒ Private ☐ Indian/Pueblo ☐ Federal BLM ☐ Federal Forest Service ☐ Other (specify)				
7	List all municipalities, Indian tribes, and counties within a ten (10) mile radius (20.2.72.203.B.2 NMAC) of the property on which the facility is proposed to be constructed or operated: Hobbs, Lea County				
8	**20.2.72** NMAC applications **only**: Will the property on which the facility is proposed to be constructed or operated be closer than 50 km (31 miles) to other states, Bernalillo County, or a Class I area (see www.env.nm.gov/aqb/modeling/class1areas.html)? ☒ Yes ☐ No (20.2.72.206.A.7 NMAC) If yes, list all with corresponding distances in kilometers: Texas, 22 km				
9	Name nearest Class I area: Carlsbad Caverns National Park				
10	Shortest distance (in km) from facility boundary to the boundary of the nearest Class I area (to the nearest 10 meters): 116.250 km				
11	Distance (meters) from the perimeter of the Area of Operations (AO is defined as the plant site inclusive of all disturbed lands, including mining overburden removal areas) to nearest residence, school or occupied structure: 620 m				
12	Method(s) used to delineate the Restricted Area: "**Restricted Area**" is an area to which public entry is effectively precluded. Effective barriers include continuous fencing, continuous walls, or other continuous barriers approved by the Department, such as rugged physical terrain with steep grade that would require special equipment to traverse. If a large property is completely enclosed by fencing, a restricted area within the property may be identified with signage only. Public roads cannot be part of a Restricted Area.				
13	Does the owner/operator intend to operate this source as a portable stationary source as defined in 20.2.72.7.X NMAC? ☐ Yes ☒ No A portable stationary source is not a mobile source, such as an automobile, but a source that can be installed permanently at one location or that can be re-installed at various locations, such as a hot mix asphalt plant that is moved to different job sites.				
14	Will this facility operate in conjunction with other air regulated parties on the same property? ☒ No ☐ Yes If yes, what is the name and permit number (if known) of the other facility?				

Section 1-E: Proposed Operating Schedule (The 1-E.1 & 1-E.2 operating schedules may become conditions in the permit.)

1	Facility **maximum** operating ($\frac{hours}{day}$): 24	($\frac{days}{week}$): 7	($\frac{weeks}{year}$): 52	($\frac{hours}{year}$): 8,760	
2	Facility's maximum daily operating schedule (if less than 24 $\frac{hours}{day}$)? Start: N/A	☐AM ☐PM	End: N/A	☐AM ☐PM	
3	Month and year of anticipated start of construction: N/A				
4	Month and year of anticipated construction completion: N/A				
5	Month and year of anticipated startup of new or modified facility: N/A				
6	Will this facility operate at this site for more than one year? ☒ Yes ☐ No				

Section 1-F: Other Facility Information

1	Are there any current Notice of Violations (NOV), compliance orders, or any other compliance or enforcement issues related to this facility? ☐ Yes ☒ No If yes, specify:

a	If yes, NOV date or description of issue:		NOV Tracking No:
b	Is this application in response to any issue listed in 1-F, 1 or 1a above? ☐ Yes ☒ No If Yes, provide the 1c & 1d info below:		
c	Document Title:	Date:	Requirement # (or page # and paragraph #):
d	Provide the required text to be inserted in this permit:		
2	Is air quality dispersion modeling or modeling waiver being submitted with this application? ☐ Yes ☒ No		
3	Does this facility require an "Air Toxics" permit under 20.2.72.400 NMAC & 20.2.72.502, Tables A and/or B? ☐ Yes ☒ No		
4	Will this facility be a source of federal Hazardous Air Pollutants (HAP)? ☒ Yes ☐ No		
a	If Yes, what type of source? ☐ **Major** (☐ ≥10 tpy of any single HAP **OR** ☐ ≥25 tpy of any combination of HAPS) **OR** ☒ **Minor** (☐ <10 tpy of any single HAP **AND** ☒ <25 tpy of any combination of HAPS)		
5	Is any unit exempt under 20.2.72.202.B.3 NMAC? ☐ Yes ☒ No		
a	If yes, include the name of company providing commercial electric power to the facility: _____ Commercial power is purchased from a commercial utility company, which specifically does not include power generated on site for the sole purpose of the user.		

Section 1-G: Streamline Application **(This section applies to 20.2.72.300 NMAC Streamline applications only)**

1	☐ I have filled out Section 18, "Addendum for Streamline Applications." ☒ N/A (This is not a Streamline application.)

Section 1-H: Current Title V Information - Required for all applications from TV Sources

(Title V-source required information for all applications submitted pursuant to 20.2.72 NMAC (Minor Construction Permits), or 20.2.74/20.2.79 NMAC (Major PSD/NNSR applications), and/or 20.2.70 NMAC (Title V))

1	Responsible Official (R.O.) (20.2.70.300.D.2 NMAC): David Low	Phone: 806-378-2730
a	R.O. Title: Regional Vice President, Operations	R.O. e-mail: David.Low@xcelenergy.com
b	R. O. Address:790 S. Buchanan St., Amarillo, TX 79101	
2	Alternate Responsible Official (20.2.70.300.D.2 NMAC): Jon Calcote	Phone: 806-383-1006
a	A. R.O. Title: Director, Cunnigham and Maddox Complex	A. R.O. e-mail: Jon.Calcote@xcelenergy.com
b	A. R. O. Address: PO Box 1650, Hobbs, NM 88241	
3	Company's Corporate or Partnership Relationship to any other Air Quality Permittee (List the names of any companies that have operating (20.2.70 NMAC) permits and with whom the applicant for this permit has a corporate or partnership relationship): N/A	
4	Name of Parent Company ("Parent Company" means the primary name of the organization that owns the company to be permitted wholly or in part.): Xcel Energy	
a	Address of Parent Company: 414 Nicollet Mall, Minneapolis, MN 55401	
5	Names of Subsidiary Companies ("Subsidiary Companies" means organizations, branches, divisions or subsidiaries, which are owned, wholly or in part, by the company to be permitted.): N/A	
6	Telephone numbers & names of the owners' agents and site contacts familiar with plant operations: David Low, 806-378-2730; Jon Calcote, 806-383-1006	
7	Affected Programs to include Other States, local air pollution control programs (i.e. Bernalillo) and Indian tribes: Will the property on which the facility is proposed to be constructed or operated be closer than 80 km (50 miles) from other states, local pollution control programs, and Indian tribes and pueblos (20.2.70.402.A.2 and 20.2.70.7.B)? If yes, state which ones and provide the distances in kilometers: Yes, Texas 22 km.	

Section 1-I – Submittal Requirements

Each 20.2.73 NMAC (**NOI**), a 20.2.70 NMAC (**Title V**), a 20.2.72 NMAC (**NSR** minor source), or 20.2.74 NMAC (**PSD**) application package shall consist of the following:

Hard Copy Submittal Requirements:

1) One hard copy **original signed and notarized application package** **printed double sided** **'head-to-toe'** **2-hole punched** as we bind the document on top, not on the side; except Section 2 (landscape tables), which should be head-to-head. Please use **numbered tab separators** in the hard copy submittal(s) as this facilitates the review process. For NOI submittals only, hard copies of UA1, Tables 2A, 2D & 2F, Section 3 and the signed Certification Page are required. Please include a copy of the check on a separate page.

2) If the application is for a minor NSR, PSD, NNSR, or Title V application, include one working hard **copy** for Department use. This copy should be printed in book form, 3-hole punched, and **must be double sided**. Note that this is in addition to the head-to-to 2-hole punched copy required in 1) above. Minor NSR Technical Permit revisions (20.2.72.219.B NMAC) only need to fill out Sections 1-A, 1-B, 3, and should fill out those portions of other Section(s) relevant to the technical permit revision. TV Minor Modifications need only fill out Sections 1-A, 1-B, 1-H, 3, and those portions of other Section(s) relevant to the minor modification. NMED may require additional portions of the application to be submitted, as needed.

3) The entire NOI or Permit application package, including the full modeling study, should be submitted electronically. Upon receipt of the application fee, the Bureau will email the applicant with instructions for submitting the electronic files through a secure file transfer service. Optionally, the applicant may submit the files with the application on compact disk (CD) or digital versatile disc (DVD).

4) If **air dispersion modeling** is required by the application type, include the **NMED Modeling Waiver** and/or electronic air dispersion modeling report, input, and output files. The dispersion modeling ***summary report only*** should be submitted as hard copy(ies) unless otherwise indicated by the Bureau.

5) If the applicant submits the electronic files on CD and the application is subject to PSD review under 20.2.74 NMAC (PSD) or NNSR under 20.2.79 NMC include,
   a. one additional CD copy for US EPA,
   b. one additional CD copy for each federal land manager affected (NPS, USFS, FWS, USDI) and,
   c. one additional CD copy for each affected regulatory agency other than the Air Quality Bureau.
   If the application is submitted electronically through the secure file transfer service, these extra CDs do not need to be submitted.

Electronic Submittal Requirements [in addition to the required hard copy(ies)]:

1) All required electronic documents shall be submitted. Submit a single PDF document of the entire application as submitted and the individual documents comprising the application.

2) The documents should also be submitted in Microsoft Office compatible file format (Word, Excel, etc.) allowing us to access the text and formulas in the documents (copy & paste). Any documents that cannot be submitted in a Microsoft Office compatible format shall be saved as a PDF file from within the electronic document that created the file. If you are unable to provide Microsoft office compatible electronic files or internally generated PDF files of files (items that were not created electronically: i.e. brochures, maps, graphics, etc,), submit these items in hard copy format. We must be able to review the formulas and inputs that calculated the emissions.

3) It is preferred that this application form be submitted as 4 electronic files (3 MSWord docs: Universal Application section 1, Universal Application section 3-19, and Universal Application 4, the modeling report) and 1 Excel file of the tables (Universal Application section 2). Please include as many of the 3-19 Sections as practical in a single MS Word electronic document. Create separate electronic file(s) if a single file becomes too large or if portions must be saved in a file format other than MS Word.

4) The electronic file names shall be a maximum of 25 characters long (including spaces, if any). The format of the electronic Universal Application shall be in the format: "A-3423-FacilityName". The "A" distinguishes the file as an application submittal, as opposed to other documents the Department itself puts into the database. Thus, all electronic application submittals should begin with "A-". Modifications to existing facilities should use the core permit number (i.e. '3423') the Department assigned to the facility as the next 4 digits. Use 'XXXX' for new facility applications. The format of any separate electronic submittals (additional submittals such as non-Word attachments, re-submittals, application updates) and Section document shall be in the format: "A-3423-9-description", where "9" stands for the section # (in this case Section 9-Public Notice). Please refrain, as much as possible, from submitting any scanned documents as this file format is extremely large, which uses up too much storage capacity in our database. Please take the time to fill out the header information throughout all submittals as this will identify any loose pages, including the Application Date (date submitted) & Revision # (0 for original, 1, 2, etc.; which will help keep track of subsequent partial update(s) to the original submittal. The footer information should not be modified by the applicant.

Table of Contents

Section 1: **General Facility Information**
Section 2: **Tables**
Section 3: **Application Summary**
Section 4: **Process Flow Sheet**
Section 5: **Plot Plan Drawn to Scale**
Section 6: **All Calculations**
Section 7: **Information Used to Determine Emissions**
Section 8: **Map(s)**
Section 9: **Proof of Public Notice**
Section 10: **Written Description of the Routine Operations of the Facility**
Section 11: **Source Determination**
Section 12: **PSD Applicability Determination for All Sources & Special Requirements for a PSD Application**
Section 13: **Discussion Demonstrating Compliance with Each Applicable State & Federal Regulation**
Section 14: **Operational Plan to Mitigate Emissions**
Section 15: **Alternative Operating Scenarios**
Section 16: **Air Dispersion Modeling**
Section 17: **Compliance Test History**
Section 18: **Addendum for Streamline Applications (streamline applications only)**
Section 19: **Requirements for the Title V (20.2.70 NMAC) Program (Title V applications only)**
Section 20: **Other Relevant Information**
Section 21: **Addendum for Landfill Applications**
Section 22: **Certification Page**

Table 2-A: Regulated Emission Sources

Unit and stack numbering must correspond throughout the application package. If applying for a NOI under 20.2.73 NMAC, equipment exemptions under 2.72.202 NMAC do not apply.

Unit Number[1]	Source Description	Make	Model #	Serial #	Manufacturer's Rated Capacity[3] (Specify Units)	Requested Permitted Capacity[3] (Specify Units)	Date of Manufacture[2] / Date of Construction/ Reconstruction[2]	Controlled by Unit # / Emissions vented to Stack #	Source Classification Code (SCC)	For Each Piece of Equipment, Check One	RICE Ignition Type (CI, SI, 4SLB, 4SRB, 2SLB)[4]	Replacing Unit No.
S1	Natural Gas Boiler	Combustion Engineering	Type R	7764	133 MW	133 MW	1967	S1		☒ Existing (unchanged) ☐ To be Removed ☐ New/Additional ☐ Replacement Unit ☐ To Be Modified ☐ To be Replaced	20.2.33, 40 CFR 72, 73, & 75	N/A
S2	Natural Gas Turbine	Westinghouse	W501-B4	47A5287	94 MW	94 MW	8/4/1975	S2		☒ Existing (unchanged) ☐ To be Removed ☐ New/Additional ☐ Replacement Unit ☐ To Be Modified ☐ To be Replaced	20.2.61, 40 CFR 64	N/A
S3	Natural Gas Turbine	General Electric	Frame 4	127791	15 MW	15 MW	1963	S3		☒ Existing (unchanged) ☐ To be Removed ☐ New/Additional ☐ Replacement Unit ☐ To Be Modified ☐ To be Replaced	20.2.61	N/A
SP	Starting Engine for Unit S3	Cummins	V903-C295	99413	295 HP	295 HP	1978	SP		☒ Existing (unchanged) ☐ To be Removed ☐ New/Additional ☐ Replacement Unit ☐ To Be Modified ☐ To be Replaced	40 CFR 63 ZZZZ	N/A
										☐ Existing (unchanged) ☐ To be Removed ☐ New/Additional ☐ Replacement Unit ☐ To Be Modified ☐ To be Replaced		
										☐ Existing (unchanged) ☐ To be Removed ☐ New/Additional ☐ Replacement Unit ☐ To Be Modified ☐ To be Replaced		
										☐ Existing (unchanged) ☐ To be Removed ☐ New/Additional ☐ Replacement Unit ☐ To Be Modified ☐ To be Replaced		
										☐ Existing (unchanged) ☐ To be Removed ☐ New/Additional ☐ Replacement Unit ☐ To Be Modified ☐ To be Replaced		
										☐ Existing (unchanged) ☐ To be Removed ☐ New/Additional ☐ Replacement Unit ☐ To Be Modified ☐ To be Replaced		
										☐ Existing (unchanged) ☐ To be Removed ☐ New/Additional ☐ Replacement Unit ☐ To Be Modified ☐ To be Replaced		
										☐ Existing (unchanged) ☐ To be Removed ☐ New/Additional ☐ Replacement Unit ☐ To Be Modified ☐ To be Replaced		
										☐ Existing (unchanged) ☐ To be Removed ☐ New/Additional ☐ Replacement Unit ☐ To Be Modified ☐ To be Replaced		
										☐ Existing (unchanged) ☐ To be Removed ☐ New/Additional ☐ Replacement Unit ☐ To Be Modified ☐ To be Replaced		
										☐ Existing (unchanged) ☐ To be Removed ☐ New/Additional ☐ Replacement Unit ☐ To Be Modified ☐ To be Replaced		
										☐ Existing (unchanged) ☐ To be Removed ☐ New/Additional ☐ Replacement Unit ☐ To Be Modified ☐ To be Replaced		

[1] Unit numbers must correspond to unit numbers in the previous permit unless a complete cross reference table of all units in both permits is provided.
[2] Specify dates required to determine regulatory applicability.
[3] To properly account for power conversion efficiencies, generator set rated capacity shall be reported as the rated capacity of the engine in horsepower, not the kilowatt capacity of the generator set.
[4] "4SLB" means four stroke lean burn engine, "4SRB" means four stroke rich burn engine, "2SLB" means two stroke lean burn engine, "CI" means compression ignition, and "SI" means spark ignition

Table 2-B: Insignificant Activities[1] (20.2.70 NMAC) OR Exempted Equipment (20.2.72 NMAC)

All 20.2.70 NMAC (Title V) applications must list all Insignificant Activities in this table. All 20.2.72 NMAC applications must list Exempted Equipment in this table. If equipment listed on this table is exempt under 20.2.72.202.B.5, include emissions calculations and emissions totals for 202.B.5 "similar functions" units, operations, and activities in Section 6, Calculations. Equipment and activities exempted under 20.2.72.202 NMAC may not necessarily be Insignificant under 20.2.70 NMAC (and vice versa). Unit & stack numbering must be consistent throughout the application package. Per Exemptions Policy 02-012.00 (see http://www.env.nm.gov/aqb/permit/aqb_pol.html), 20.2.72.202.B NMAC Exemptions do not apply, but 20.2.72.202.A NMAC exemptions do apply to NOI facilities under 20.2.73 NMAC. List 20.2.72.301.D.4 NMAC Auxiliary Equipment for Streamline applications in Table 2-A. The List of Insignificant Activities (for TV) can be found online at http://www.env.nm.gov/aqb/forms/InsignificantListTitleV.pdf . TV sources may elect to enter both TV Insignificant Activities and Part 72 Exemptions on this form.

Unit Number	Source Description	Manufacturer	Model No. / Serial No.	Max Capacity / Capacity Units	List Specific 20.2.72.202 NMAC Exemption (e.g. 20.2.72.202.B.5) / Insignificant Activity citation (e.g. IA List Item #1.a)	Date of Manufacture /Reconstruction[2] / Date of Installation /Construction[2]	For Each Piece of Equipment, Check Onc
EGR-2	Standby Emergency Generator	Cummins	DSGAC-2232029	150	20.2.72.202.B.3	10/26/2009	☒ Existing (unchanged) ☐ To be Removed ☐ New/Additional ☐ Replacement Unit ☐ To Be Modified ☐ To be Replaced
			L090076016	KW	IA List Item #7	2010	
DT-4	Overhead Diesel Tank	N/A	N/A	300		Unknown	☒ Existing (unchanged) ☐ To be Removed ☐ New/Additional ☐ Replacement Unit ☐ To Be Modified ☐ To be Replaced
			N/A	gal	IA List Item #5	Unknown	
EGR-T	EGR-2 Diesel Storage Tank	Cummins	DSGAC-2232029	309		Unknown	☒ Existing (unchanged) ☐ To be Removed ☐ New/Additional ☐ Replacement Unit ☐ To Be Modified ☐ To be Replaced
			L090076016	gal	IA List Item #5	Unknown	
T3	Starting Engine Diesel Storage Tank	Cummins	V903-C295	300		Unknown	☒ Existing (unchanged) ☐ To be Removed ☐ New/Additional ☐ Replacement Unit ☐ To Be Modified ☐ To be Replaced
			3/6/2172	gal	IA List Item #5	Unknown	
							☐ Existing (unchanged) ☐ To be Removed ☐ New/Additional ☐ Replacement Unit ☐ To Be Modified ☐ To be Replaced
							☐ Existing (unchanged) ☐ To be Removed ☐ New/Additional ☐ Replacement Unit ☐ To Be Modified ☐ To be Replaced
							☐ Existing (unchanged) ☐ To be Removed ☐ New/Additional ☐ Replacement Unit ☐ To Be Modified ☐ To be Replaced
							☐ Existing (unchanged) ☐ To be Removed ☐ New/Additional ☐ Replacement Unit ☐ To Be Modified ☐ To be Replaced
							☐ Existing (unchanged) ☐ To be Removed ☐ New/Additional ☐ Replacement Unit ☐ To Be Modified ☐ To be Replaced
							☐ Existing (unchanged) ☐ To be Removed ☐ New/Additional ☐ Replacement Unit ☐ To Be Modified ☐ To be Replaced
							☐ Existing (unchanged) ☐ To be Removed ☐ New/Additional ☐ Replacement Unit ☐ To Be Modified ☐ To be Replaced
							☐ Existing (unchanged) ☐ To be Removed ☐ New/Additional ☐ Replacement Unit ☐ To Be Modified ☐ To be Replaced
							☐ Existing (unchanged) ☐ To be Removed ☐ New/Additional ☐ Replacement Unit ☐ To Be Modified ☐ To be Replaced

[1] Insignificant activities exempted due to size or production rate are defined in 20.2.70.300.D.6, 20.2.70.7.Q NMAC, and the NMED/AQB List of Insignificant Activities, dated September 15, 2008. Emissions from these insignificant activities do not need to be reported, unless specifically requested.

[2] Specify date(s) required to determine regulatory applicability.

Table 2-C: Emissions Control Equipment

Unit and stack numbering must correspond throughout the application package. Only list control equipment for TAPs if the TAP's maximum uncontrolled emissions rate is over its respective threshold as listed in 20.2.72 NMAC, Subpart V, Tables A and B. In accordance with 20.2.72.203.A(3) and (8) NMAC, 20.2.70.300.D(5)(b) and (e) NMAC, and 20.2.73.200.B(7) NMAC, the permittee shall report all control devices and list each pollutant controlled by the control device regardless if the applicant takes credit for the reduction in emissions.

Control Equipment Unit No.	Control Equipment Description	Date Installed	Controlled Pollutant(s)	Controlling Emissions for Unit Number(s)[1]	Efficiency (% Control by Weight)	Method used to Estimate Efficiency
S2	Water Injection for NOX Control	8/4/1975	NOX	S2	N/A	

[1] List each control device on a separate line. For each control device, list all emission units controlled by the control device.

Table 2-D: Maximum Emissions (under normal operating conditions)

☒ **This Table was intentionally left blank because it would be identical to Table 2-E.**

Maximum Emissions are the emissions at maximum capacity and prior to (in the absence of) pollution control, emission-reducing process equipment, or any other emission reduction. Calculate the hourly emissions using the worst case hourly emissions for each pollutant. For each pollutant, calculate the annual emissions as if the facility were operating at maximum plant capacity without pollution controls for 8760 hours per year, unless otherwise approved by the Department. List Hazardous Air Pollutants (HAP) & Toxic Air Pollutants (TAPs) in Table 2-I. Unit & stack numbering must be consistent throughout the application package. Fill all cells in this table with the emission numbers or a "-" symbol. A "-" symbol indicates that emissions of this pollutant are not expected. Numbers shall be expressed to at least 2 decimal points (e.g. 0.41, 1.41, or 1.41E-4).

Unit No.	NOx		CO		VOC		SOx		PM[1]		PM10[1]		PM2.5[1]		H_2S		Lead	
	lb/hr	ton/yr	lb/hr	ton/yr	lb/hr	ton/yr	lb/hr	ton/yr	lb/hr	ton/yr	lb/hr	ton/yr	lb/hr	ton/yr	lb/hr	ton/yr	lb/hr	ton/yr
Totals																		

[1]**Condensable Particulate Matter:** Include condensable particulate matter emissions for PM10 and PM2.5 if the source is a combustion source. Do not include condensable particulate matter for PM unless PM is set equal to PM10 and PM2.5. Particulate matter (PM) is not subject to an ambient air quality standard, but PM is a regulated air pollutant under PSD (20.2.74 NMAC) and Title V (20.2.70 NMAC).

Table 2-E: Requested Allowable Emissions

Unit & stack numbering must be consistent throughout the application package. Fill all cells in this table with the emission numbers or a "-" symbol. A "-" symbol indicates that emissions of this pollutant are not expected. Numbers shall be expressed to at least 2 decimal points (e.g. 0.41, 1.41, or $1.41E^{-4}$).

Unit No.	NOx		CO		VOC		SOx		PM[1]		PM10[1]		PM2.5[1]		H_2S		Lead	
	lb/hr	ton/yr	lb/hr	ton/yr	lb/hr	ton/yr	lb/hr	ton/yr	lb/hr	ton/yr	lb/hr	ton/yr	lb/hr	ton/yr	lb/hr	ton/yr	lb/hr	ton/yr
S1 (Normal)	331.5	1444	66.3	288.8	1.83	8.02	0.7	3.4	3.9	17.2	3.9	17.2	3.9	17.2	Negligible	Negligible	Negligible	Negligible
S1 (Emerg)	392.1	9.4	78.4	1.9	Included in Above		0.8	0	Included in Above		Included in Above		Included in Above		Negligible	Negligible	Negligible	Negligible
S2	275	735.6	60.1	160.8	0.027	0.073	0.7	11.8	15.9	42.5	15.9	42.5	15.9	42.5	Negligible	Negligible	Negligible	Negligible
S3	93	39.5	9.9	4.2	0.006	0.002	0.2	0.1	3.4	1.43	3.4	1.43	3.4	1.43	Negligible	Negligible	Negligible	Negligible
Totals																		

[1] **Condensable Particulate Matter:** Include condensable particulate matter emissions for PM10 and PM2.5 if the source is a combustion source. Do not include condensable particulate matter for PM unless PM is set equal to PM10 and PM2.5. Particulate matter (PM) is not subject to an ambient air quality standard, but it is a regulated air pollutant under PSD (20.2.74 NMAC) and Title V (20.2.70 NMAC).

Table 2-F: Additional Emissions during Startup, Shutdown, and Routine Maintenance (SSM)

☐ This table is intentionally left blank since all emissions at this facility due to routine or predictable startup, shutdown, or scehduled maintenance are no higher than those listed in Table 2-E and a malfunction emission limit is not already permitted or requested. If you are required to report GHG emissions as described in Section 6a, include any GHG emissions during Startup, Shutdown, and/or Scheduled Maintenance (SSM) in Table 2-P. Provide an explanations of SSM emissions in Section 6 and 6a.

All applications for facilities that have emissions during routine our predictable startup, shutdown or scheduled maintenance (SSM)[1], including NOI applications, must include in this table the Maximum Emissions during routine or predictable startup, shutdown and scheduled maintenance (20.2.7 NMAC, 20.2.72.203.A.3 NMAC, 20.2.73.200.D.2 NMAC). In Section 6 and 6a, provide emissions calculations for all SSM emissions reported in this table. Refer to "Guidance for Submittal of Startup, Shutdown, Maintenance Emissions in Permit Applications (https://www.env.nm.gov/aqb/permit/aqb_pol.html) for more detailed instructions. Numbers shall be expressed to at least 2 decimal points (e.g. 0.41, 1.41, or 1.41E-4).

Unit No.	NOx		CO		VOC		SOx		PM[2]		PM10[2]		PM2.5[2]		H_2S		Lead	
	lb/hr	ton/yr	lb/hr	ton/yr	lb/hr	ton/yr	lb/hr	ton/yr	lb/hr	ton/yr	lb/hr	ton/yr	lb/hr	ton/yr	lb/hr	ton/yr	lb/hr	ton/yr
This permit application is for the renewal of the TitleV permit. Currently, the Title V and NSR permits do not include SSM emissions. SPS will submit SSM emissions in an NSR application when NMED requests the application on their schedule.																		
Totals																		

[1] **For instance**, if the short term steady-state Table 2-E emissions are 5 lb/hr and the SSM rate is 12 lb/hr, enter 7 lb/hr in this table. If the annual steady-state Table 2-E emissions are 21.9 TPY, and the number of scheduled SSM events result in annual emissions of 31.9 TPY, enter 10.0 TPY in the table below.

[2] **Condensable Particulate Matter:** Include condensable particulate matter emissions for PM10 and PM2.5 if the source is a combustion source. Do not include condensable particulate matter for PM unless PM is set equal to PM10 and PM2.5. Particulate matter (PM) is not subject to an ambient air quality standard, but it is a regulated air pollutant under PSD (20.2.74 NMAC) and Title V (20.2.70 NMAC).

Table 2-G: Stack Exit and Fugitive Emission Rates for Special Stacks

☒ I have elected to leave this table blank because this facility does not have any stacks/vents that split emissions from a single source or combine emissions from more than one source listed in table 2-A. Additionally, the emission rates of all stacks match the Requested allowable emission rates stated in Table 2-E.

Use this table to list stack emissions (requested allowable) from split and combined stacks. List Toxic Air Pollutants (TAPs) and Hazardous Air Pollutants (HAPs) in Table 2-I. List all fugitives that are associated with the normal, routine, and non-emergency operation of the facility. Unit and stack numbering must correspond throughout the application package. Refer to Table 2-E for instructions on use of the "-" symbol and on significant figures.

Stack No.	Serving Unit Number(s) from Table 2-A	NOx		CO		VOC		SOx		PM		PM10		PM2.5		☐ H_2S or ☐ Lead	
		lb/hr	ton/yr	lb/hr	ton/yr	lb/hr	ton/yr	lb/hr	ton/yr	lb/hr	ton/yr	lb/hr	ton/yr	lb/hr	ton/yr	lb/hr	ton/yr
Totals:																	

Table 2-H: Stack Exit Conditions

Unit and stack numbering must correspond throughout the application package. Include the stack exit conditions for each unit that emits from a stack, including blowdown venting parameters and tank emissions. If the facility has multiple operating scenarios, complete a separate Table 2-H for each scenario and, for each, type scenario name here:

Stack Number	Serving Unit Number(s) from Table 2-A	Orientation (H-Horizontal V=Vertical)	Rain Caps (Yes or No)	Height Above Ground (ft)	Temp. (F)	Flow Rate		Moisture by Volume (%)	Velocity (ft/sec)	Inside Diameter (ft)
						(acfs)	(dscfs)			
S1	Unit 1	V	No	156	394	400		N/A	N/A	12.00
S2	Unit 2	V	No	35	760	22406		N/A	N/A	24' x 12' Eff. Diam. 19.2
S3	Unit 3	V	No	21	736	6603		5	5	8' x 8' Eff. Diam. 9.3

Table 2-I: Stack Exit and Fugitive Emission Rates for HAPs and TAPs

In the table below, report the Potential to Emit for each HAP from each regulated emission unit listed in Table 2-A, only if the entire facility emits the HAP at a rate greater than or equal to one (1) ton per year For each such emission unit, HAPs shall be reported to the nearest 0.1 tpy. Each facility-wide Individual HAP total and the facility-wide Total HAPs shall be the sum of all HAP sources calculated to the nearest 0.1 ton per year. Per 20.2.72.403.A.1 NMAC, facilities not exempt [see 20.2.72.402.C NMAC] from TAP permitting shall report each TAP that has an uncontrolled emission rate in excess of its pounds per hour screening level specified in 20.2.72.502 NMAC. TAPs shall be reported using one more significant figure than the number of significant figures shown in the pound per hour threshold corresponding to the substance. Use the HAP nomenclature as it appears in Section 112 (b) of the 1990 CAAA and the TAP nomenclature as it listed in 20.2.72.502 NMAC. Include tank-flashing emissions estimates of HAPs in this table. For each HAP or TAP listed, fill all cells in this table with the emission numbers or a "-" symbol. A "-" symbol indicates that emissions of this pollutant are not expected or the pollutant is emitted in a quantity less than the threshold amounts described above.

Stack No.	Unit No.(s)	Total HAPs		Formaldehyde ☒ HAP or ☐ TAP		Provide Pollutant Name Here ☐ HAP or ☐ TAP		Provide Pollutant Name Here ☐ HAP or ☐ TAP		Provide Pollutant Name Here ☐ HAP or ☐ TAP		Provide Pollutant Name Here ☐ HAP or ☐ TAP		Provide Pollutant Name Here ☐ HAP or ☐ TAP		Provide Pollutant Name Here ☐ HAP or ☐ TAP		Provide Pollutant Name Here ☐ HAP or ☐ TAP	
		lb/hr	ton/yr	lb/hr	ton/yr	lb/hr	ton/yr	lb/hr	ton/yr	lb/hr	ton/yr	lb/hr	ton/yr	lb/hr	ton/yr	lb/hr	ton/yr	lb/hr	ton/yr
S1		0.3	1.1	0.3	1.1														
S2		1.6	4.3	1.6	4.3														
S3		0.3	0.2	0.3	0.2														
Totals:																			

Table 2-J: Fuel

Specify fuel characteristics and usage. Unit and stack numbering must correspond throughout the application package.

Unit No.	Fuel Type (low sulfur Diesel, ultra low sulfur diesel, Natural Gas, Coal, …)	Fuel Source: purchased commercial, pipeline quality natural gas, residue gas, raw/field natural gas, process gas (e.g. SRU tail gas) or other	Specify Units				
			Lower Heating Value	Hourly Usage	Annual Usage	% Sulfur	% Ash
S1	Natural Gas	Pipeline Quality Natural Gas	950 Btu/cf	1.7 mmcf/hr	1.5×10^4 mmcf/yr	N/A	N/A
S2	Natural Gas	Pipeline Quality Natural Gas	950 Btu/cf	1.13 mmcf/hr	$6.07\ 10^3$ mmcf/yr	N/A	N/A
S3	Natural Gas	Pipeline Quality Natural Gas	950 Btu/cf	0.24 mmcf/hr	2.05×10^2 mmcf/yr	N/A	N/A
EGR-2	Ultra Low Sulfur Diesel	Purchased Commercial	135,000 Btu/gal	11.7 gal	5,850 gal	<0.5%	N/A
SP	Ultra Low Sulfur Diesel	Purchased Commercial	135,000 Btu/gal	10 gal	5,000 gal	<0.5%	N/A

Table 2-K: Liquid Data for Tanks Listed in Table 2-L

For each tank, list the liquid(s) to be stored in each tank. If it is expected that a tank may store a variety of hydrocarbon liquids, enter "mixed hydrocarbons" in the Composition column for that tank and enter the corresponding data of the most volatile liquid to be stored in the tank. If tank is to be used for storage of different materials, list all the materials in the "All Calculations" attachment, run the newest version of TANKS on each, and use the material with the highest emission rate to determine maximum uncontrolled and requested allowable emissions rate. The permit will specify the most volatile category of liquids that may be stored in each tank. Include appropriate tank-flashing modeling input data. Use additional sheets if necessary. Unit and stack numbering must correspond throughout the application package.

Tank No.	SCC Code	Material Name	Composition	Liquid Density (lb/gal)	Vapor Molecular Weight (lb/lb*mol)	Average Storage Conditions		Max Storage Conditions	
						Temperature (°F)	True Vapor Pressure (psia)	Temperature (°F)	True Vapor Pressure (psia)
N/A									

Table 2-L: Tank Data

Include appropriate tank-flashing modeling input data. Use an addendum to this table for unlisted data categories. Unit and stack numbering must correspond throughout the application package. Use additional sheets if necessary. See reference Table 2-L2. Note: 1.00 bbl = 10.159 M3 = 42.0 gal

Tank No.	Date Installed	Materials Stored	Seal Type (refer to Table 2-LR below)	Roof Type (refer to Table 2-LR below)	Capacity		Diameter (M)	Vapor Space (M)	Color (from Table VI-C)		Paint Condition (from Table VI-C)	Annual Throughput (gal/yr)	Turn-overs (per year)
					(bbl)	(M^3)			Roof	Shell			
N/A													

Table 2-L2: Liquid Storage Tank Data Codes Reference Table

Roof Type	Seal Type, Welded Tank Seal Type		Seal Type, Riveted Tank Seal Type		Roof, Shell Color	Paint Condition
FX: Fixed Roof	**Mechanical Shoe Seal**	**Liquid-mounted resilient seal**	**Vapor-mounted resilient seal**	**Seal Type**	**WH**: White	Good
IF: Internal Floating Roof	**A**: Primary only	**A**: Primary only	**A**: Primary only	**A**: Mechanical shoe, primary only	**AS**: Aluminum (specular)	Poor
EF: External Floating Roof	**B**: Shoe-mounted secondary	**B**: Weather shield	**B**: Weather shield	**B**: Shoe-mounted secondary	**AD**: Aluminum (diffuse)	
P: Pressure	**C**: Rim-mounted secondary	**C**: Rim-mounted secondary	**C**: Rim-mounted secondary	**C**: Rim-mounted secondary	**LG**: Light Gray	
					MG: Medium Gray	
					BL: Black	
					OT: Other (specify)	

Note: 1.00 bbl = 0.159 M^3 = 42.0 gal

Table 2-M: Materials Processed and Produced (Use additional sheets as necessary.)

Material Processed				Material Produced			
Description	**Chemical Composition**	**Phase (Gas, Liquid, or Solid)**	**Quantity (specify units)**	**Description**	**Chemical Composition**	**Phase**	**Quantity (specify units)**
Natural Gas Fuel	Pipeline Quality Natural Gas	Gas	2.2×10^4 mmcf/yr	Electric Generation			

Table 2-N: CEM Equipment

Enter Continuous Emissions Measurement (CEM) Data in this table. If CEM data will be used as part of a federally enforceable permit condition, or used to satisfy the requirements of a state or federal regulation, include a copy of the CEM's manufacturer specification sheet in the Information Used to Determine Emissions attachment. Unit and stack numbering must correspond throughout the application package. Use additional sheets if necessary.

Stack No.	Pollutant(s)	Manufacturer	Model No.	Serial No.	Sample Frequency	Averaging Time	Range	Sensitivity	Accuracy
S1	NOX	Thermo Scientific	42iQ	12202115530	10 sec.	1 hr.	0-300 ppm	0.1 ppm	As specified in 40 CFR Part 75
S1	NOX - O2 Diluent	Thermo Scientific	42iQ	12202115530	10 sec.	1 hr.	0-300 ppm	0.1 ppm	As specified in 40 CFR Part 75

Table 2-O: Parametric Emissions Measurement Equipment

Unit and stack numbering must correspond throughout the application package. Use additional sheets if necessary.

Unit No.	Parameter/Pollutant Measured	Location of Measurement	Unit of Measure	Acceptable Range	Frequency of Maintenance	Nature of Maintenance	Method of Recording	Averaging Time
S1	Natural Gas Flow	Natural Gas Pipeline	hundred scf/hr	30-13,000	As needed	Visual Check of Orifice Plate	Logs	N/A
S2	Natural Gas Flow	Natural Gas Pipeline	hundred scf/hr	30-13,000	As needed	Visual Check of Orifice Plate	Logs	N/A
S3	Natural Gas Flow	Natural Gas Pipeline	hundred scf/hr	30-13,000	As needed	Visual Check of Orifice Plate	Logs	N/A

Table 2-P: Greenhouse Gas Emissions

Applications submitted under 20.2.70, 20.2.72, & 20.2.74 NMAC are required to complete this Table. Power plants, Title V major sources, and PSD major sources must report and calculate all GHG emissions for each unit. Applicants must report potential emission rates in short tons per year (see Section 6.a for assistance). Include GHG emissions during Startup, Shutdown, and Scheduled Maintenance in this table. For minor source facilities that are not power plants, are not Title V, or are not PSD, there are three options for reporting GHGs 1) report GHGs for each individual piece of equipment; 2) report all GHGs from a group of unit types, for example report all combustion source GHGs as a single unit and all venting GHG as a second separate unit; OR 3) check the following box ☐ By checking this box, the applicant acknowledges the total CO2e emissions are less than 75,000 tons per year.

		CO_2 ton/yr	N_2O ton/yr	CH_4 ton/yr	SF_6 ton/yr	PFC/HFC ton/yr[2]									Total GHG Mass Basis ton/yr[4]	Total CO_2e ton/yr[5]
Unit No.	**GWPs [1]**	**1**	**298**	**25**	**22,800**	**footnote 3**										
S1	**mass GHG**	669655.13	1.26	12.62											669669.01	
	CO_2e	669655.13	334.45	353.38												670342.96
S2	**mass GHG**	354844.72	0.67	6.69											354852.08	
	CO_2e	354844.72	177.22	187.25												355209.19
S3	**mass GHG**	11981.4	0.02	0.23											11981.65	
	CO_2e	11981.4	5.98	6.32												11993.7
	mass GHG															
	CO_2e															
	mass GHG															
	CO_2e															
	mass GHG															
	CO_2e															
	mass GHG															
	CO_2e															
	mass GHG															
	CO_2e															
	mass GHG															
	CO_2e															
	mass GHG															
	CO_2e															
	mass GHG															
	CO_2e															
	mass GHG															
	CO2e															
Total	**mass GHG**															
	CO_2e															

[1] **GWP** (Global Warming Potential): Applicants must use the most current GWPs codified in Table A-1 of 40 CFR part 98. GWPs are subject to change, therefore, applicants need to check 40 CFR 98 to confirm GWP values.

[2] For **HFCs** or **PFCs** describe the specific HFC or PFC compound and use a separate column for each individual compound.

[3] For each new compound, enter the appropriate GWP for each HFC or PFC compound from Table A-1 in 40 CFR 98.

[4] Green house gas emissions on a **mass basis** is the ton per year green house gas emission before adjustment with its GWP.

[5] **CO_2e** means Carbon Dioxide Equivalent and is calculated by multiplying the TPY mass emissions of the green house gas by its GWP.

Section 3

Application Summary

The **Application Summary** shall include a brief description of the facility and its process, the type of permit application, the applicable regulation (i.e. 20.2.72.200.A.X, or 20.2.73 NMAC) under which the application is being submitted, and any air quality permit numbers associated with this site. If this facility is to be collocated with another facility, provide details of the other facility including permit number(s). In case of a revision or modification to a facility, provide the lowest level regulatory citation (i.e. 20.2.72.219.B.1.d NMAC) under which the revision or modification is being requested. Also describe the proposed changes from the original permit, how the proposed modification will affect the facility's operations and emissions, de-bottlenecking impacts, and changes to the facility's major/minor status (both PSD & Title V).

The **Process Summary** shall include a brief description of the facility and its processes.

Startup, Shutdown, and Maintenance (SSM) routine or predictable emissions: Provide an overview of how SSM emissions are accounted for in this application. Refer to "Guidance for Submittal of Startup, Shutdown, Maintenance Emissions in Permit Applications (http://www.env.nm.gov/aqb/permit/app_form.html) for more detailed instructions on SSM emissions.

The Maddox Station Power Plant is an electric power generating facility owned and operated by Southwestern Public Service Company. This facility is authorized to operate under operating permit P008R4M1 and NSR No. 0747-M1R1 and is currently operating. This facility is equipped with 3 main units with a combined power generation capacity of 242 MW. Unit 1 (S1) is a natural gas tangentially fired boiler and units S2 and S3 are gas-fired natural gas turbines.

This is an application for a renewal of permit P008R4M1. No changes to existing units are requested. There was no change to permit 0747M1R1.

All emission limits are requested to remain the same.

SSM Emissions:
Permit 0747M1R1 includes SSM emissions in the emission limit table. The emission limits did not need to be changed to accommodate the addition of SSM requirements.

This page left intentionally blank

Section 4

Process Flow Sheet

A **process flow sheet** and/or block diagram indicating the individual equipment, all emission points and types of control applied to those points. The unit numbering system should be consistent throughout this application.

Process Flow Sheets are attached.

ATTACHMENT #1
SCHEMATIC DIAGRAM
FOR MADDOX STATION UNIT 1
ORIS CODE: 2446
NADB BOILER ID: 051B

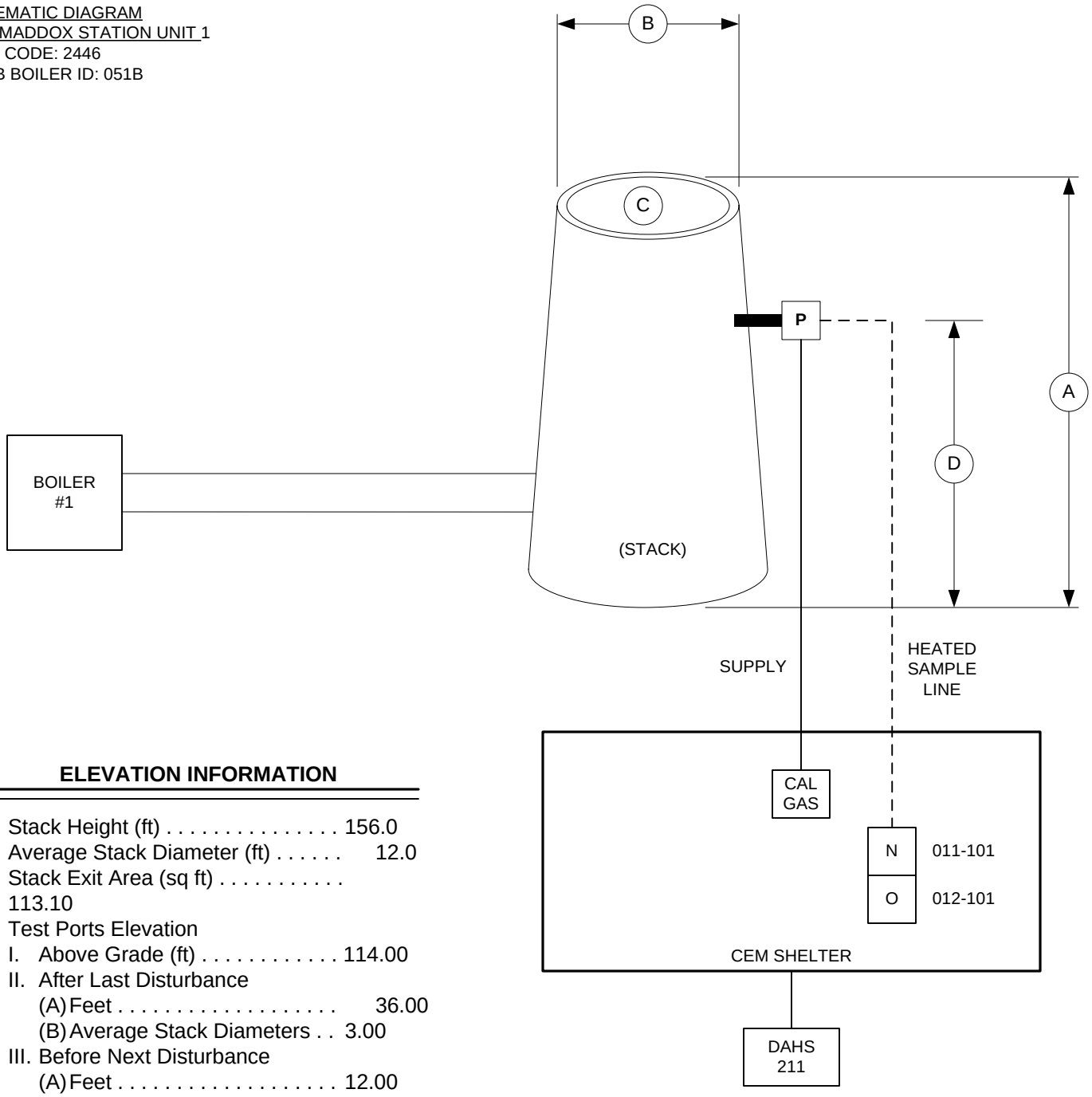

ELEVATION INFORMATION

A. Stack Height (ft) 156.0
B. Average Stack Diameter (ft) 12.0
C. Stack Exit Area (sq ft) 113.10
D. Test Ports Elevation
   I. Above Grade (ft) 114.00
   II. After Last Disturbance
      (A) Feet 36.00
      (B) Average Stack Diameters . . 3.00
   III. Before Next Disturbance
      (A) Feet 12.00
      (B) Average Stack Diameters . . 1.00

Southwestern Public Service Company

Configuration of Monitor and Test Points for CEMS - Unit 1

Maddox Station (ORIS Code 2446)
Hobbs, NM

Initials:	Date:	Rev. No.:
KDS	9/02/08	03

ATTACHMENT #2
GAS FUEL FLOW SCHEMATIC
FOR MADDOX STATION
ORIS CODE: 2446
NADB BOILER ID: 051B

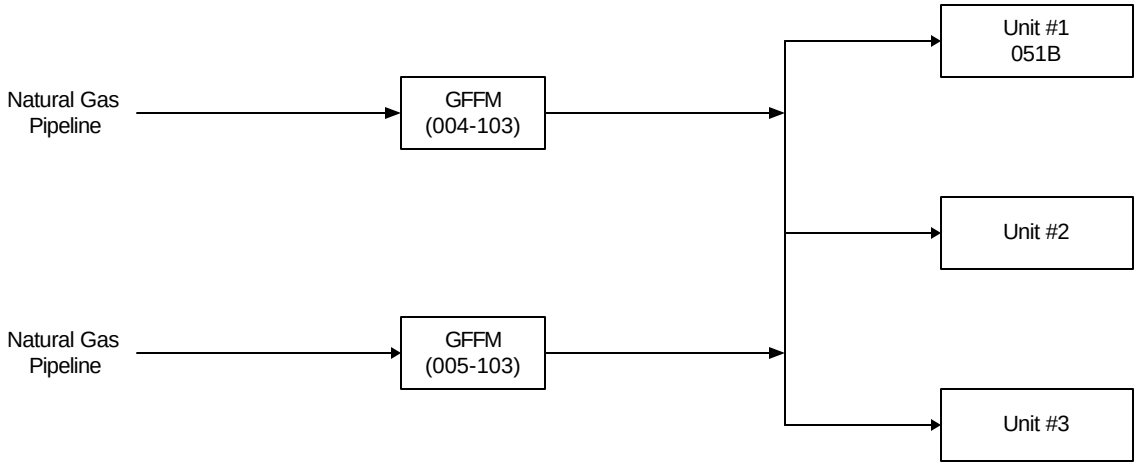

Southwestern Public Service Company		
Gas Fuel Flow Schematic Units 1, 2, and 3 Maddox Station (ORIS Code 2446) Hobbs, NM		
Initials: KLW	Date: 6/23/05	Rev. No.: 03

ATTACHMENT #3
STACK PLAN FOR MADDOX UNIT 1
SHOWING ORIENTATION OF SAMPLING PROBE
TEST PORTS

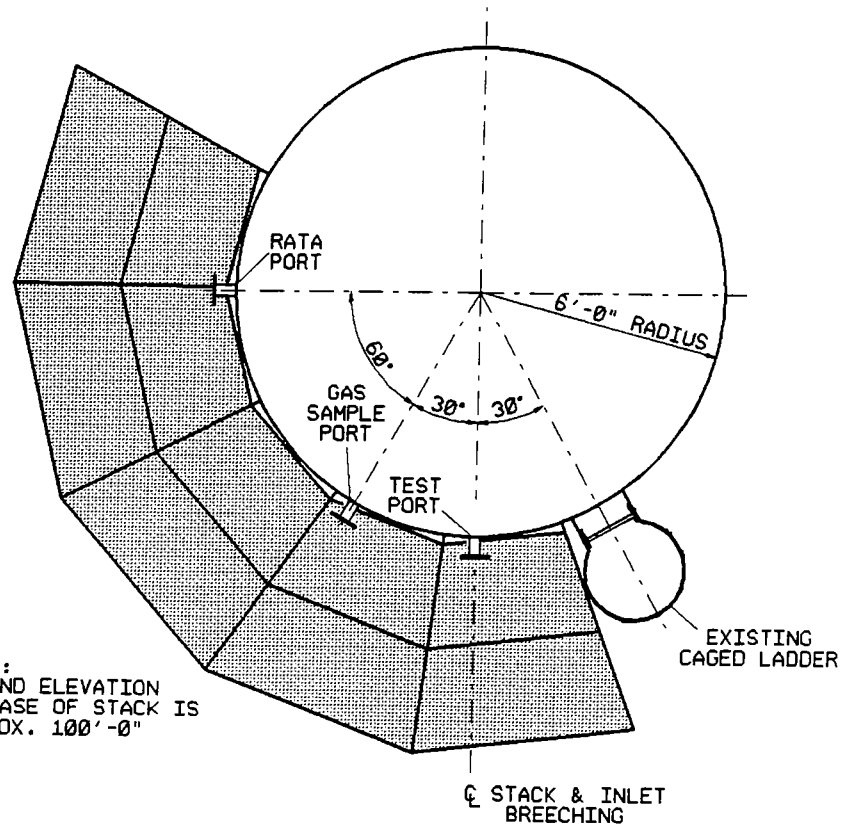

ELEVATION INFORMATION

A. LANDING ELEVATION
ABOVE GRADE (FT) _ _ _ _ _ _ _ _ _ 139'-7¼"

B. TEST PORTS ELEVATION
(ALL TEST PORTS AT THIS LANDING)

I. ABOVE GRADE (FT) _ _ _ _ _ _ _ _ 144'-0"

II. AFTER LAST DISTURBANCE
(A) FEET _ _ _ _ _ _ _ _ _ _ _ _ _ 36'-0"
(B) AVERAGE STACK DIAMETERS _ _ _ _ _ _ _ _ _ _ 3.0

III. BEFORE NEXT DISTURBANCE
(A) FEET _ _ _ _ _ _ _ _ _ _ _ _ _ 12'-0"
(B) AVERAGE STACK DIAMETERS _ _ _ _ _ _ _ _ _ _ 1.0

ORIENTATION INFORMATION

A. CROSS SECTIONAL AREA AT ILLUSTRATED ELEVATION (FT^2) _ _ _ _ _ _ _ _ 113.10

NO	REVISIONS	DATE	BY	CHK	DSNR	APPR

THIS DRAWING IS THE PROPERTY OF **UTILITY ENGINEERING CORPORATION** AMARILLO, TEXAS AND IS NOT TO BE REPRODUCED OR USED TO FURNISH ANY INFORMATION FOR THE MAKING OF DRAWINGS OR APPARATUS EXCEPT WHERE PROVIDED FOR BY AGREEMENT WITH SAID COMPANY

UTILITY ENGINEERING
AMARILLO, TEXAS

Southwestern PUBLIC SERVICE Company

MADDOX STATION UNIT 1
CONFIGURATION OF MONITOR
AND TEST POINTS FOR CEMS

DRAWN	DESIGNED	CHECKED	APPROVED	CADD DRAWING NUMBER	SHEET	REV
BARNETT				/usr/p/cems/stackm.dgn	1	0

ATTACHMENT #4
DUCTWORK DRAWING FOR
MADDOX STATION UNIT 1

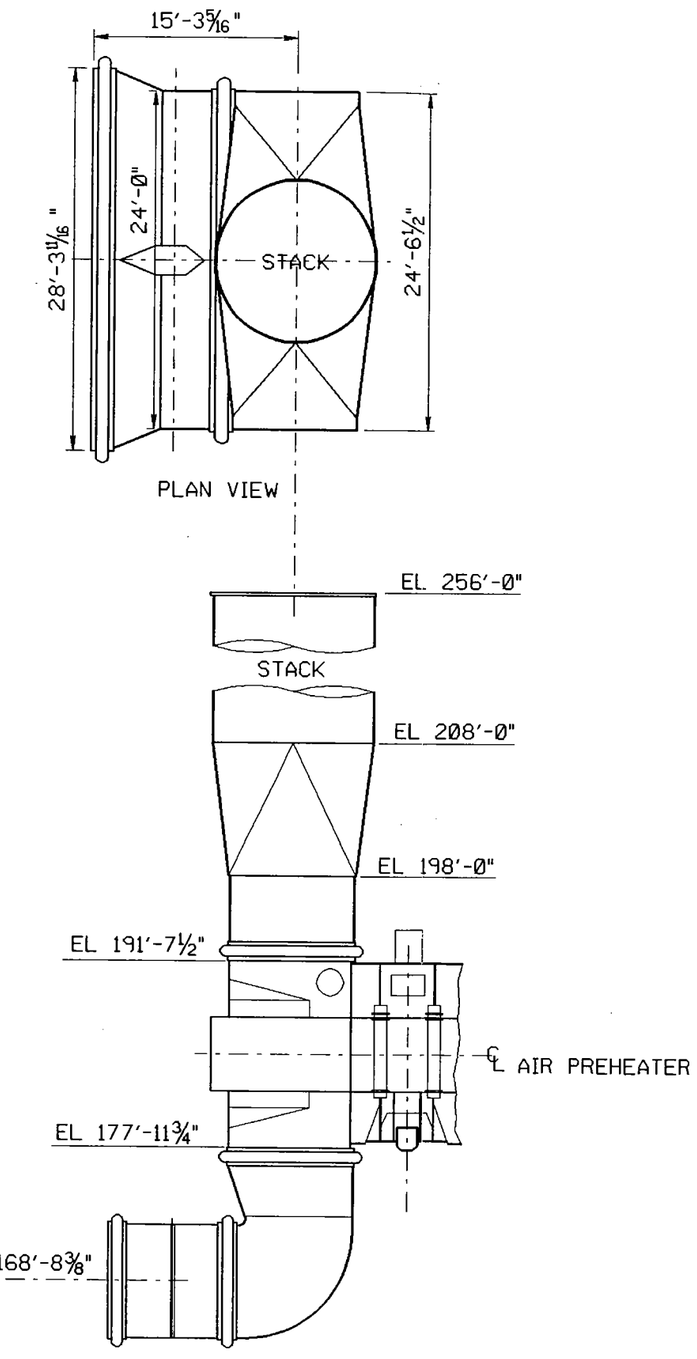

NOTE:
GROUND ELEVATION
IN THIS AREA IS
APPROX. 100'-0"

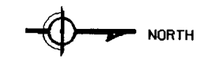

GENERAL NOTES

1. INTENT OF THIS DRAWING IS TO PORTRAY THE CONFIGURATION OF THE DUCTWORK. THIS IS NOT A CONSTRUCTION DRAWING.
2. THE DIMENSIONS GIVEN ON THIS DWG ARE FOR REFERENCE PURPOSES ONLY. THIS GIVES A RELATIVE CONCEPT OF THE DUCTWORK IN RELATION TO MAJOR EQUIPMENT ITEMS.

REFERENCE DRAWINGS

NO	REVISIONS	DATE	BY	CHK	DSNR	APPR

THIS DRAWING IS THE PROPERTY OF UTILITY ENGINEERING CORPORATION AMARILLO, TEXAS AND IS NOT TO BE REPRODUCED OR USED TO FURNISH ANY INFORMATION FOR THE MAKING OF DRAWINGS OR APPARATUS EXCEPT WHERE PROVIDED FOR BY AGREEMENT WITH SAID COMPANY

UTILITY ENGINEERING
AMARILLO, TEXAS

Southwestern PUBLIC SERVICE Company

MADDOX STATION UNIT 1
CEMS SYSTEM
BOILER TO STACK DUCTWORK

DRAWN	DESIGNED	CHECKED	CHECKED
R.BARNETT			
APPROVAL	CADD DRAWING NUMBER	SHEET	REV
APPROVAL	/usr/p/cems/ductm.dgn	1	0

troub
/usr/p/cems/ductm.dgn

3-NOV-1994 12:31

ATTACHMENT #5
CEMS DATA FLOW DIAGRAM FOR MADDOX STATION UNIT 1
ORIS CODE: 2446
NADB BOILER ID: 051B

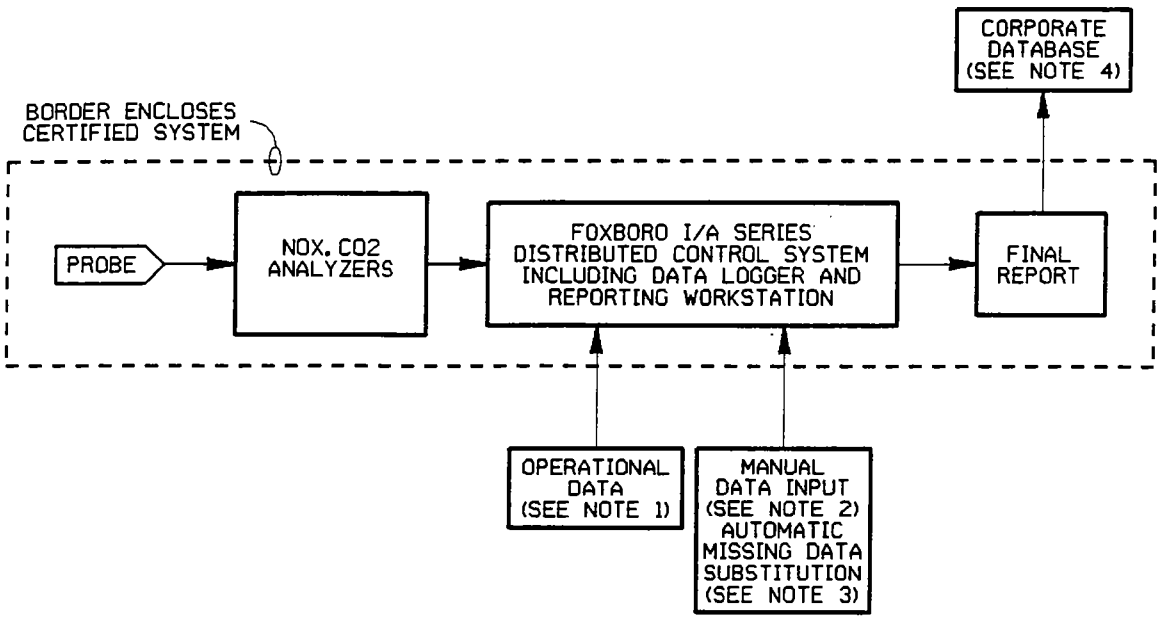

NOTES

1. INCLUDE LOAD, FUEL FLOW, AND OTHER UNIT OPERATING CONDITIONS.
2. INCLUDING ERROR CODES PERTAINING TO CEMS OPERATION.
3. FOXBORO I/A SOFTWARE PROVIDES FOR THE INCLUSION OF THE REQUIRED FILL-IN OF MISSING DATA RECORDS.
4. DESIGNATED REPRESENTATIVE REVIEWS REPORTS AND SUBMITS THEM TO THE EPA.

NO	REVISIONS	DATE	BY	CHK	DSNR	APPR

THIS DRAWING IS THE PROPERTY OF **UTILITY ENGINEERING CORPORATION** AMARILLO, TEXAS AND IS NOT TO BE REPRODUCED OR USED TO FURNISH ANY INFORMATION FOR THE MAKING OF DRAWINGS OR APPARATUS EXCEPT WHERE PROVIDED FOR BY AGREEMENT WITH SAID COMPANY

UTILITY ENGINEERING
AMARILLO, TEXAS

Southwestern PUBLIC SERVICE Company

MADDOX STATION UNIT 1
CEMS DATA FLOW DIAGRAM

DRAWN 11/7/94	DESIGNED	CHECKED	APPROVED	CADD DRAWING NUMBER	SHEET	REV
BARNETT				/usr/p/cems/m1flwdia.dgn		0

Section 5

Plot Plan Drawn To Scale

A **plot plan drawn to scale** showing emissions points, roads, structures, tanks, and fences of property owned, leased, or under direct control of the applicant. This plot plan must clearly designate the restricted area as defined in UA1, Section 1-D.12. The unit numbering system should be consistent throughout this application.

Facility plot plans are attached.

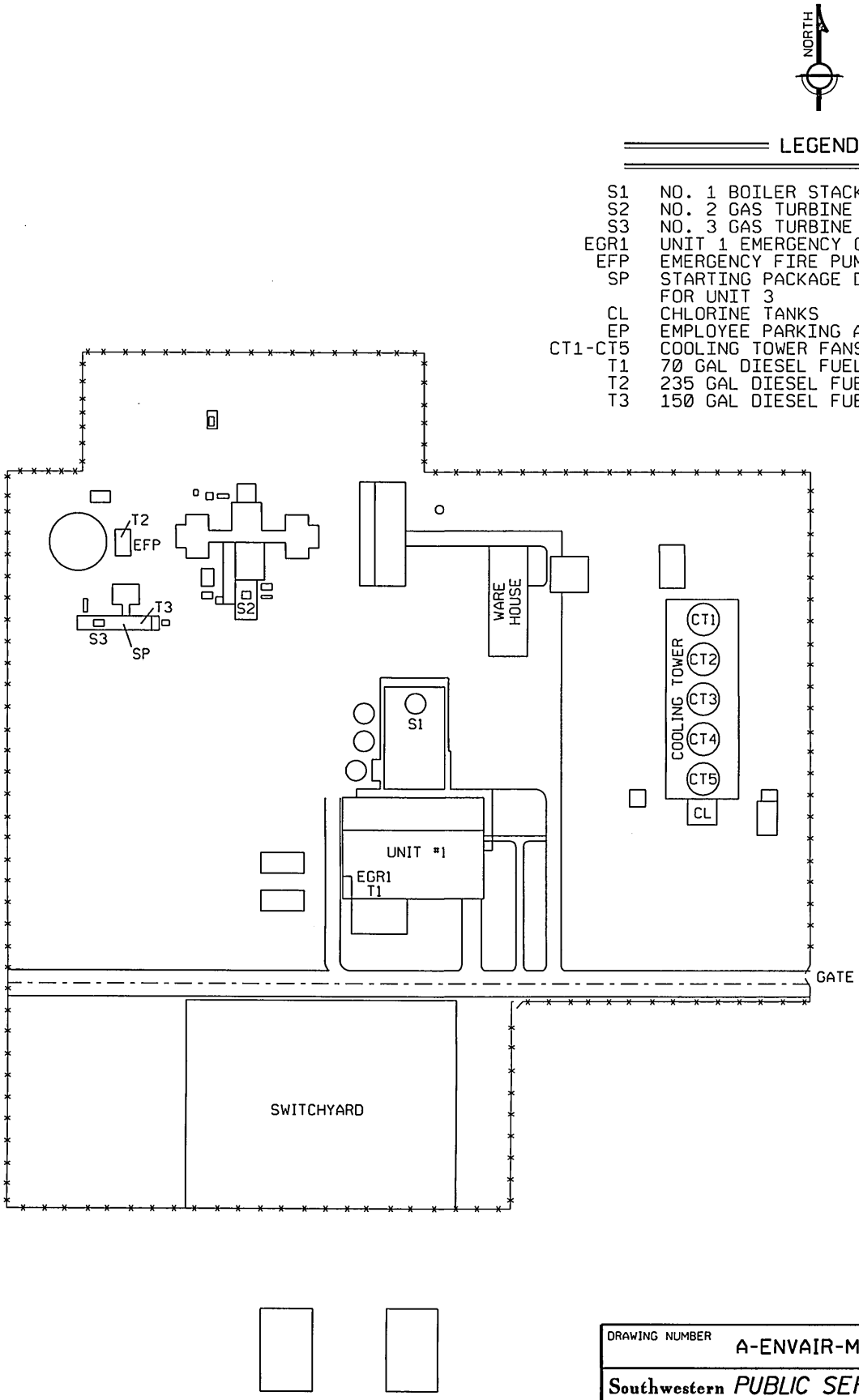

DRAWING NUMBER A-ENVAIR-MADX-1 REV 2

Southwestern PUBLIC SERVICE Company

EMISSION POINT
IDENTIFICATION NUMBERS
MADDOX STATION
HOBBS, NEW MEXICO

K GEORGE

08-29-07 03:14:30 PM A-ENVAIR-MADX-1.DGN

Section 6

All Calculations

Show all calculations used to determine both the hourly and annual controlled and uncontrolled emission rates. All calculations shall be performed keeping a minimum of three significant figures. Document the source of each emission factor used (if an emission rate is carried forward and not revised, then a statement to that effect is required). If identical units are being permitted and will be subject to the same operating conditions, submit calculations for only one unit and a note specifying what other units to which the calculations apply. All formulas and calculations used to calculate emissions must be submitted. The "Calculations" tab in the UA2 has been provided to allow calculations to be linked to the emissions tables. Add additional "Calc" tabs as needed. If the UA2 or other spread sheets are used, all calculation spread sheet(s) shall be submitted electronically in Microsoft Excel compatible format so that formulas and input values can be checked. Format all spread sheets and calculations such that the reviewer can follow the logic and verify the input values. Define all variables. If calculation spread sheets are not used, provide the original formulas with defined variables. Additionally, provide subsequent formulas showing the input values for each variable in the formula. All calculations, including those calculations are imbedded in the Calc tab of the UA2 portion of the application, the printed Calc tab(s), should be submitted under this section.

Tank Flashing Calculations: The information provided to the AQB shall include a discussion of the method used to estimate tank-flashing emissions, relative thresholds (i.e., NOI, permit, or major source (NSPS, PSD or Title V)), accuracy of the model, the input and output from simulation models and software, all calculations, documentation of any assumptions used, descriptions of sampling methods and conditions, copies of any lab sample analysis. If Hysis is used, all relevant input parameters shall be reported, including separator pressure, gas throughput, and all other relevant parameters necessary for flashing calculation.

SSM Calculations: It is the applicant's responsibility to provide an estimate of SSM emissions or to provide justification for not doing so. In this Section, provide emissions calculations for Startup, Shutdown, and Routine Maintenance (SSM) emissions listed in the Section 2 SSM and/or Section 22 GHG Tables and the rational for why the others are reported as zero (or left blank in the SSM/GHG Tables). Refer to "Guidance for Submittal of Startup, Shutdown, Maintenance Emissions in Permit Applications (http://www.env.nm.gov/aqb/permit/app_form.html) for more detailed instructions on calculating SSM emissions. If SSM emissions are greater than those reported in the Section 2, Requested Allowables Table, modeling may be required to ensure compliance with the standards whether the application is NSR or Title V. Refer to the Modeling Section of this application for more guidance on modeling requirements.

Glycol Dehydrator Calculations: The information provided to the AQB shall include the manufacturer's maximum design recirculation rate for the glycol pump. If GRI-Glycalc is used, the full input summary report shall be included as well as a copy of the gas analysis that was used.

Road Calculations: Calculate fugitive particulate emissions and enter haul road fugitives in Tables 2-A, 2-D and 2-E for:

1. If you transport raw material, process material and/or product into or out of or within the facility and have PER emissions greater than 0.5 tpy.
2. If you transport raw material, process material and/or product into or out of the facility more frequently than one round trip per day.

Significant Figures:

A. All emissions standards are deemed to have at least two significant figures, but not more than three significant figures.

B. At least 5 significant figures shall be retained in all intermediate calculations.

C. In calculating emissions to determine compliance with an emission standard, the following rounding off procedures shall be used:

(1) If the first digit to be discarded is less than the number 5, the last digit retained shall not be changed;

(2) If the first digit discarded is greater than the number 5, or if it is the number 5 followed by at least one digit other than the number zero, the last figure retained shall be increased by one unit; **and**

(3) If the first digit discarded is exactly the number 5, followed only by zeros, the last digit retained shall be rounded upward if it is an odd number, but no adjustment shall be made if it is an even number.

(4) The final result of the calculation shall be expressed in the units of the standard.

Control Devices: In accordance with 20.2.72.203.A(3) and (8) NMAC, 20.2.70.300.D(5)(b) and (e) NMAC, and 20.2.73.200.B(7) NMAC, the permittee shall report all control devices and list each pollutant controlled by the control device

regardless if the applicant takes credit for the reduction in emissions. The applicant can indicate in this section of the application if they chose to not take credit for the reduction in emission rates. For notices of intent submitted under 20.2.73 NMAC, only uncontrolled emission rates can be considered to determine applicability unless the state or federal Acts require the control. This information is necessary to determine if federally enforceable conditions are necessary for the control device, and/or if the control device produces its own regulated pollutants or increases emission rates of other pollutants.

Steady State Emissions:
Emission calculations are included with this application. The emissions summarized in Table 2-E are carried forward, unchanged, from previous applications.

Startup and Shutdown Emissions:
The emission limits for Unit S1 did not need to change to accommodate the addition of SSM requirements to permit 0747M1R1.

Control Devices:
Maddox Unit 2 is equipped with a water injection system, which sprays approximately 30 gallons per minute of de-ionized water into the combustion chamber for the purpose of minimizing peak flame temperatures and resultant formation of thermal NOX in the exhaust gases of the turbine. The water flow is varied with load, using a feedback loop to adjust the injection rate. The injection amounts generally follow the curve found in the Compliance Assurance Monitoring (CAM) Plan, which is maintained at the facility. On a monthly basis, water flow is checked to ensure the flow is within specifications. The CAM plan was originally submitted to NMED on August 29, 2007 and operations have not changed since that time.

GENERAL NOTES ON THE CALCULATIONS

Maddox Station is an electric power production facility owned and operated by Southwestern Public Service Company (SPS) (SIC Code 4911). All activities performed at this location pertain to the operation and maintenance of equipment required to produce electricity. For the purposes of accounting for potential emissions, the facilities are described as follows.

COMBUSTION SOURCES

The major facilities at this SPS generating plant fall under several general categories, well defined for purposes of emissions calculations; one natural gas-fueled, tangentially-fired, external-combustion boiler; two smaller natural gas fired combustion turbines, and diesel-fueled internal combustion reciprocating engines for emergency/auxiliary service. The spreadsheet uses fuel data to calculate emissions based on stack tests or permit limits where applicable, or EPA's AP-42 or *AIRS/AFS* data (which closely match *AP-42* data) for the boilers. AP-42 data were used for the internal combustion engines. Spreadsheet forms used for the plants were developed.

Due to the low demand on the internal combustion engines, and the fact that one of the engines is used strictly for a backup to fire fighting equipment, all the internal combustion engines qualify as *insignificant activities* under AQCR 770, and their emissions will not be added to the final totals of the annual emissions for the plant. Additionally, comfort boilers are considered *insignificant activities* for purposes of Title V permitting. These sources are included in these calculations to demonstrate their qualification for that status.

FUEL USE BASIS:

The annual fuel use rates are based on ratings given for the units. For the purposes of calculating maximum potential emissions, an average load was selected which would demonstrate the highest average likely for any given year for each unit, based on that unit's allowable operating hours. Unit 1 was assumed to have operated at full rated capacity for 8,760 hours per year. Unit 2 was reduced in operating hours in an operating permit amendment finalized December 7, 2001, and is operated a maximum of 5,350 hours on an annual basis. Unit 3 operates on an annual maximum basis of 850 hours per year, as reflected in the conditions of permit 0747M1R1.

Hourly maximum rates are based on the maximum load which engineering staff have estimated as being possible for the units under ideal conditions for maximum rated fuel input. These rates are used in calculating hourly maximum emissions.

EMERGENCY MAXIMUM LOAD

Maximum capacity proven during tests on these units are reported on the application in section 2 Tables and Section 6 All Calculations. These maximum are achieved for limited periods, but are not maintainable by these units for long operating

periods, due to the higher probability of major component failure. This capability would be used during periods of time in which power from other sources was not available in the southeastern New Mexico region (a system fault which results in the loss of other power supplies to a number of communities). This capability is typically tested for an hour or so each year, to prove its effectiveness, and train operators for emergency conditions. The calculations assume the use of this capability 48 hours per year. It is expected that no emergency and training situation would reach this period of time.

NATURAL GAS HEATING VALUE:
The heating value of natural gas varies somewhat, as a result of the slight variability of gas delivered in the pipeline source to this plant. The heat value of gas delivered to Maddox Station typically varies from approximately 950 BTU's per cubic foot to around 1,075 BTU's per cubic foot. A value of 1,000 BTU's per cubic foot was chosen to calculate emissions, to provide a conservatively high estimate. Greenhouse Gas Emissions calculations use a value of 1,050 Btu/cf.

NOX EMISSIONS CALCULATIONS:
The basis for the NOx emissions calculations was emissions limits where applicable. *AP-42* data were used for other equipment. The calculations were essentially Lb. of NOx per MMBTU (million British Thermal Units) of fuel times units of that type of fuel, or for the reciprocating engines, pounds of NOx per unit of fuel.

SO_2 EMISSIONS CALCULATIONS:
AP-42 emission factors for SO_2 calculations for SO_2 in natural gas-fired boilers are based on sulfur which is injected as part of the odorization of the fuel, or Hydrogen Sulfide (sour gas), or organic sulfur.

AP-42 factors, common to all processes, (see specific references in the calculations) were used to estimate SO_2 emissions. The calculations were essentially Lb. of SO_2 per MMCF (million cubic feet) of natural gas times units of that type of fuel.

Fuel quality limits of 0.5% sulfur by weight were assumed for diesel-fueled equipment.

CO EMISSIONS CALCULATIONS:
AP-42 factors for the particular type of process (see specific references in the calculations) were used to estimate CO emissions. The calculations were essentially Lb. of CO per MMCF of natural gas or thousand gallons of diesel fuel (Mgallons) times units of that type of fuel.

VOC EMISSIONS CALCULATIONS:
AP-42 factors for the particular type of process (see specific references in the calculations) were used to estimate VOC emissions. The calculations were essentially Lb. of VOC per MMCF of natural gas or Mgallons of diesel times units of that type of fuel.

PM 10 AND TSP EMISSIONS CALCULATIONS:
AP-42 factors for the particular type of process (see specific references in the calculations) were used to calculate all particulate emissions. The calculations were essentially Lb. of particulate per MMCF of natural gas or Mgallons of diesel times units of that type of fuel. For natural gas combustion, all particulate emissions were considered to be PM 10.

FUEL TANKS
There are four diesel tanks (EGR-T, T2, DT-4, and T3) located at this facility. Two of the tanks (EGR-T with EGR-1 and T3 with the startup diesel package for unit 3, SP) are located inside structures, and both are associated with standby/auxiliary equipment, so they have low throughput. As a result, these tanks are counted as insignificant in their emissions. The third tank, T2, is associated with the fire pump and is thus considered a trivial activity. Tank DT-4 is a stand-alone tank that meet the requirements as insignificant activities.

HAPs CALCULATIONS FOR MADDOX STATION
Sources of HAPs were reviewed at this plant. When available, emission factors from the Electric Power Research Institute (EPRI) Lark-Tripp program are used. Other emission factors are from EPA AP-42. The largest HAP emissions from gas turbines and steam boilers was for Formaldehyde. The cooling tower was also reviewed for Chlorine, since this tower is periodically chlorinated (not continuously, and only part of the cooling tower flow.) Applying these emission factors showed HAP rates at well below the 10 tons per species, or 25 tons in the aggregate.

CHLORINE EMISSIONS FROM COOLING TOWERS
The literature was reviewed for information regarding emissions of chlorine from water circulating over cooling towers. A calculation was developed and is attached.

The cooling tower (emission points CT1 through CT5) at this facility are associated with unit 1 boiler (emission point S1) and are used to dissipate the heat of condensation from the turbine. The facility uses commercially –available HTH to chlorinate the cooling towers as an algaecide. HTH is applied as needed and a maximum annual value is used to calculate the total chlorine emissions on an annual basis. Hourly emissions are based on 8,760 operating hours.

SOUTHWESTERN PUBLIC SERVICE COMPANY

MADDOX STATION

Calculated Maximum Annual Emissions 25-Feb-25

Basis: Maximum Fuel Input 09:04 AM

INFORMATION ON EMISSIONS PROCESSES

MAJOR PROCESSES	EMISSION POINT	TYPE	SCC Code	Rated Capacity		Maximum Capacity	
Unit 1	S1	T.F. Boiler	1-01-006-04	123	Megawatts	133	Megawatts
Unit 2	S2	Gas Turbine	2-01-002-01	66	Megawatts	94	Megawatts
Unit 3	S3	Gas Turbine	2-01-002-01	10.5	Megawatts	15	Megawatts
STANDBY/AUXILIARIES	==========	==========	==========	==========	==========	==========	==========
Emergency Gen.	EGR1	Diesel Eng.	2-01-001-02	100	Horsepower *(ESTIMATED)*		
Start.Pkg.	SP	Diesel Eng.	2-01-001-02	295	Horsepower		
Em.Fire Pump	EFP	LPG Eng.	2-02-010-02	100	Horsepower	(*INSIGNIFICANT ACT*.)	

MAJOR PROCESSES	Actual Annual Hourly Fuel Use Data						Rate
Unit 1	1.307E+00	MMCF Gas	1.307.E+03	MMBtus	8,760.0	Hours of Op.	0.000 Mcf/Hr
Unit 2	1.134E+00	MMCF Gas	1.134.E+03	MMBtus	5,350.0	Hours of Op.	0.000 Mcf/Hr
Unit 3	2.407E-01	MMCF Gas	2.407.E+02	MMBtus	850.0	Hours of Op.	0.000 Mcf/Hr
STANDBY/AUXILIARIES	==========	==========	==========	==========	==========	==========	==========
Emergency Gen.					48	Hours of Op.	
Start.Pkg.					48	Hours of Op.	
Em.Fire Pump					48	Hours of Op.	

ASSUME:							
	NAT'L GAS	1,000	BTU/SCF				
	LPG	21,200	BTU/LB,	SG=	0.515	GIVES	90,619 BTU/GAL
	DIESEL	138,500	BTU/GAL				

Emission Unit	MMBTU'S/HR	MMCF/HR	MMBTU'S/YR	MMCF/YR	MAX HR/YR.	MAX. ANN. CAP.	MAX. GEN.
S1 RATED	1,105	1.105	1.15E+07	1.15E+04	8,760	100%	1077480
MAX	1,307	1.307					
S2 RATED	842	0.842	6.07E+06	6.07E+03	5,350	100%	353100
MAX	1,134	1.134					
S3 RATED	188	0.188	2.05E+05	2.05E+02	850	100%	8925
MAX	241	0.241					
	MMBTU'S/hr	Mgals./hr.	MMBTU/yr.	Mgals./yr.			1,439,505
EGR1	1	5.25E-03	3.49E+01	2.52E-04	750		
SP	2	2.37E-02	1.03E+02	1.14E-03	240		
EFP	1	5.25E-03	3.49E+01	2.52E-04	500		

SOUTHWESTERN PUBLIC SERVICE COMPANY

MADDOX STATION

Calculated Annual Emissions 25-Feb-25

Basis: Maximum Fuel Data

Emissions Species =>		NOx	SO2	CO	VOC	TSP	PM
S1	Tons/Yr.	1,444	3.44	288	8	17	17
	Lb./Hr.	332	1	66	2	4	4
S2	Tons/Yr.	736	1.8	161	38	42	42
	Lb./Hr.	275	1	60	14	16	16
S3	Tons/Yr.	39.5	0.100	4.20	0.00	1.43	1.43
	Lb./Hr.	93	0	10	0	3	3
INSIGNIFICANT ACTIVITIES							
EGR 1	Tons/Yr.	0.9	0.2	0.2	0.2	0.0	0.0
	Lb./Hr.	2.4	0.4	0.5	0.4	0.0	0.0
SP	Tons/Yr.	0.9	0.1	0.2	0.1	0.0	0.0
	Lb./Hr.	7.2	1.2	1.6	1.2	0.1	0.1
EFP	Tons/Yr.	INSIGNIFICANT ACTIVITY - Fire Fighting Equipment					
	Lb./Hr.						
TOTAL OF CRITERIA POLLUTANTS (t/yr)		2,220	5	453	46	60	60
	TOTAL	2,845 TONS/YEAR					

Since PM 10 and TSP are the same for these processes, the total is 2,785 Tons/Yr.

SOUTHWESTERN PUBLIC SERVICE COMPANY

MADDOX STATION

Calculated Annual Emissions 25-Feb-25

Basis: Maximum Fuel Data

Emission Unit	NOx Emissions (Use CEMs or Permit Limits) Rate #/MMBTUs	MAX. Lb/Hr	Calculated **Actual** Tons/Yr.	SO2 Emissions (Use *AIRS/AFS*, Same for All Nat. Gas Sources) SO2 Rate #/MMCF	Max Lb/Hr	Tons/Yr.
S1	CEMs Data	331.5	1,444	0.60	0.78	3.4
S2	Stack Tests	275.0	736	0.60	0.68	1.8
S3	N/A	93.0	39.5	0.60	0.14	0.1
	g./Hp.Hr.	Lb/Hr	Tons/Yr.	g./Hp.Hr.		
EGR1	11	2	1	1.84	0.40	0
SP	11	7	1	1.84	1.19	0
EFP	11	2	1	0.00	0.00	0

Major Units Total

Emission Unit	CO Emissions Unit 2 from Testing CO Rate #/MMCF (S2 #/MMBTU)	Lb/Hr	Tons/Yr.	VOC Emissions (Use *AIRS/AFS*, for SCC Class Sources) VOC Rate #/MMBtu	1.40 #/MMCF Lb/Hr	Tons/Yr.
S1	40	66.30	288.00	1.40	1.830	8.015
S2	0.053	60.09	160.74	12.60	14.286	38.215
S3	115	9.90	4.20	0.02	0.006	0.002
	g./Hp.Hr.	Lb/Hr	Tons/Yr.	g./Hp.Hr.	Lb/Hr	Tons/Yr.
EGR1	2.40	0.53	0	0.33	0	0
SP	2.40	1.56	0	0.33	0	0
EFP	1.50	0.33	0	0.43	0	0

(Use *AIRS/AFS*, for SCC Class Sources)

Emission Unit	PM10 Emissions #/MMCF	Max Lb/Hr	Tons/Yr.	TSP Rate #/MMCF	1.40 #/MMCF Lb/Hr	Tons/Yr.
S1	3.00	3.92	17.18	3.0	3.92	17.18
S2	14.00	15.87	42.46	14.0	15.87	42.46
S3	14.00	3.37	1.43	14.0	3.37	1.43
	g./Hp.Hr.	Lb/Hr	Tons/Yr.	#/Mgal.	Lb/Hr	Tons/Yr.
EGR1	0.158	0	0	0.218	0	0
SP	0.158	0	0	0.218	0	0
EFP	0.098	0	0	0.160	0	0

HAPS Calculations
Maddox Station

Maddox Station Total HAPS = 8.03 tpy

Natural Gas Boiler Unit S1
Annual Fuel Usage 1.15E+04 mmCF/yr 8,760 hrs/yr
High Heating Value 1,100 Btu/cf

Name	lb/mmSCF *	tpy	lb/hr
2-Methylnaphthalene	2.40E-05	0.00	0.00
3-Methylchloranthrene	1.80E-06	0.00	0.00
7,12-Dimethylbenz(a)anthracene	1.60E-05	0.00	0.00
Acenaphthene	1.80E-06	0.00	0.00
Acenaphthylene	1.80E-06	0.00	0.00
Anthracene	2.40E-06	0.00	0.00
Arsenic **	0.23 lb/TBtu	0.00	0.00
Benz(a)anthracene	1.80E-06	0.00	0.00
Benzene **	0.8 lb/TBtu	0.01	0.00
Benzo(a)pyrene	1.20E-06	0.00	0.00
Benzo(b)fluoranthene	1.80E-06	0.00	0.00
Benzo(g,h,i)perylene	1.20E-06	0.00	0.00
Benzo(k)fluoranthene	1.80E-06	0.00	0.00
Beryllium	1.20E-05	0.00	0.00
Cadmium	1.10E-03	0.01	0.00
Chromium **	1.10 lb/TBtu	0.01	0.00
Chrysene	1.80E-06	0.00	0.00
Cobalt **	0.08 lb/TBtu	0.00	0.00
Dibenzo(a,h)anthracene	1.20E-06	0.00	0.00
Dichlorobenzene	1.20E-03	0.01	0.00
Fluoranthene	3.00E-06	0.00	0.00
Fluorene	2.80E-06	0.00	0.00
Formaldehyde **	175 lb/TBtu	1.11	0.25
Hexane **	0.42 lb/TBtu	0.00	0.00
Indeno(1,2,3-cd)pyrene	1.80E-06	0.00	0.00
Lead **	0.40 lb/TBtu	0.00	0.00
Manganese **	0.40 lb/TBtu	0.00	0.00
Mercury **	0.0008 lb/TBtu	0.00	0.00
Naphthalene	6.10E-04	0.00	0.00
Nickel **	2.40 lb/TBtu	0.02	0.00
Phenanathrene	1.70E-05	0.00	0.00
Pyrene	5.00E-06	0.00	0.00
Selenium	2.40E-05	0.00	0.00
Toluene **	10 lb/TBtu	0.06	0.01
	Total	1.22	

Note:
* AP-42 Tables 1.4-3 and 1.4-4, except for Hexane
** When available, use Electric Power Research Institute emission factor. Source : *LARK-TRIPP RY2008: Calculations and Methods for Threshold Determination and Release Estimates* , EPRI, Palo Alto, CA 2009, 1019357. See Attached Table.

HAPS Calculations
Maddox Station

Gas Turbines

	Unit S2	Unit S3
Annual Fuel Usage	6.07E+03	2.05E+02
Annual Hours	5,350	850

Name	EF lb/mmSCF *	Unit S2		Unit S3	
		tpy	lb/hr	tpy	lb/hr
1,3-Butadiene	4.30E-07	0.00	0.00	0.00	0.00
Acetaldehyde	4.00E-05	0.24	0.09	0.01	0.02
Acrolein	6.40E-05	0.39	0.15	0.01	0.03
Benzene	1.20E-05	0.07	0.03	0.00	0.01
Ethylbenzene	3.20E-05	0.19	0.07	0.01	0.02
Formaldehyde	7.10E-04	4.31	1.61	0.15	0.34
Naphthalene	1.30E-06	0.01	0.00	0.00	0.00
PAH	2.20E-06	0.01	0.00	0.00	0.00
Propylene Oxide	2.90E-05	0.18	0.07	0.01	0.01
Toluene	1.30E-04	0.79	0.29	0.03	0.06
Xylenes	6.40E-05	0.39	0.15	0.01	0.03
	Totals	6.59		0.22	

Note:
* AP-42 Table 3.1-3.

Chlorine Emissions from Cooling Tower
Maddox Station
Hobs, New Mexico

Chlorine
HTH Annual Total for Entire Facility: 25,000 lbs

Assume 100% CaClO

	Ca	Cl	O	
MW	40.08	35.45	16	
Number	1	2	2	
	40.08	70.9	32	142.98

Percent Chlorine: 0.495874
Pounds of Elemental Chlorine: 12396.84

Chlorine Gas Total: 0

Plant Total Chlorine: 12,397 lb

Data Comes From Annual Chemical Consumption Report

Emission Estimation Basis:
Holzwarth G., Balmer R.G. and Soni L. (1984) The Fate of Chlorine and Chloramines in Cooling Towers . *Water Res.* 18, 1421-1427.
Holzwarth G., Balmer R.G. and Soni L. (1984) The Fate of Chlorine in Recirculating Cooling Towers . *Water Res.* 18, 1429-1435.

These papers estimated that the chlorine flashoff factor from cooling towers were 0.1 at a pH of 6.5 and 0.011 at a pH of 8.5, both at approximately 40 deg. C. The target pH setpoint of Maddox Station cooling water is an operating range of 7.6 to 7.9.
Therefore, using a flashoff factor of 0.1 would be conservative.

The estimated emissions of Chlorine from the use of CaOCl for algae control in the cooling towers is:

0.62 tons per year
0.01 lb/hr

Section 6.a

Green House Gas Emissions

(Submitting under 20.2.70, 20.2.72 20.2.74 NMAC)

Title V (20.2.70 NMAC), Minor NSR (20.2.72 NMAC), and PSD (20.2.74 NMAC) applicants must estimate and report greenhouse gas (GHG) emissions to verify the emission rates reported in the public notice, determine applicability to 40 CFR 60 Subparts, and to evaluate Prevention of Significant Deterioration (PSD) applicability. GHG emissions that are subject to air permit regulations consist of the sum of an aggregate group of these six greenhouse gases: carbon dioxide (CO_2), nitrous oxide (N_2O), methane (CH_4), hydrofluorocarbons (HFCs), perfluorocarbons (PFCs), and sulfur hexafluoride (SF_6).

Calculating GHG Emissions:

1. Calculate the ton per year (tpy) GHG mass emissions and GHG CO_2e emissions from your facility.
2. GHG mass emissions are the sum of the total annual tons of greenhouse gases without adjusting with the global warming potentials (GWPs). GHG CO_2e emissions are the sum of the mass emissions of each individual GHG multiplied by its GWP found in Table A-1 in 40 CFR 98 Mandatory Greenhouse Gas Reporting.
3. Emissions from routine or predictable start up, shut down, and maintenance must be included.
4. Report GHG mass and GHG CO_2e emissions in Table 2-P of this application. Emissions are reported in **short** tons per year and represent each emission unit's Potential to Emit (PTE).
5. All Title V major sources, PSD major sources, and all power plants, whether major or not, must calculate and report GHG mass and CO2e emissions for each unit in Table 2-P.
6. For minor source facilities that are not power plants, are not Title V, and are not PSD there are three options for reporting GHGs in Table 2-P: 1) report GHGs for each individual piece of equipment; 2) report all GHGs from a group of unit types, for example report all combustion source GHGs as a single unit and all venting GHGs as a second separate unit; 3) or check the following ☐ By checking this box, the applicant acknowledges the total CO2e emissions are less than 75,000 tons per year.

Sources for Calculating GHG Emissions:

- Manufacturer's Data
- AP-42 Compilation of Air Pollutant Emission Factors at http://www.epa.gov/ttn/chief/ap42/index.html
- EPA's Internet emission factor database WebFIRE at http://cfpub.epa.gov/webfire/
- 40 CFR 98 Mandatory Green House Gas Reporting except that tons should be reported in short tons rather than in metric tons for the purpose of PSD applicability.
- API Compendium of Greenhouse Gas Emissions Methodologies for the Oil and Natural Gas Industry. August 2009 or most recent version.
- Sources listed on EPA's NSR Resources for Estimating GHG Emissions at http://www.epa.gov/nsr/clean-air-act-permitting-greenhouse-gases:

Global Warming Potentials (GWP):
Applicants must use the Global Warming Potentials codified in Table A-1 of the most recent version of 40 CFR 98 Mandatory Greenhouse Gas Reporting. The GWP for a particular GHG is the ratio of heat trapped by one unit mass of the GHG to that of one unit mass of CO_2 over a specified time period.

"Greenhouse gas" for the purpose of air permit regulations is defined as the aggregate group of the following six gases: carbon dioxide, nitrous oxide, methane, hydrofluorocarbons, perfluorocarbons, and sulfur hexafluoride. **(20.2.70.7 NMAC, 20.2.74.7 NMAC).** You may also find GHGs defined in 40 CFR 86.1818-12(a).

Metric to Short Ton Conversion:
Short tons for GHGs and other regulated pollutants are the standard unit of measure for PSD and title V permitting programs. 40 CFR 98 Mandatory Greenhouse Reporting requires metric tons.
1 metric ton = 1.10231 short tons (per Table A-2 to Subpart A of Part 98 – Units of Measure Conversions)

GHG Emissions Reported to EPA under Provisions of 40 CFR Part 98
Potential mmBtus/Year/Unit Entered in D3:D6 by Unit
Emission Intensity Rates From 40 CFR Part 98; Tables C-1 and C-2

OpCo	Plant	Entity	mmBtus (NG)		CO2 /mmBtus	CH4 /mmBtu	N2O /mmBtu	CH4 GWP (AR5)	N2O GWP (AR5)
SPS	Maddox	S1	11,449,320	Lbs./mmBtu	116.98	0.002205	0.000220	28	265
SPS	Maddox	S2	6,066,900	Kg/mmBtus	***53.06***	***0.001000***	***0.000100***	28	265
SPS	Maddox	S3	204,850						
SPS	Maddox								

Results in Pounds

OpCo	Plant	Entity	CO2 (Lbs)	mmBtus (NG)	CH4 (Lbs)	N2O (Lbs)	CH4 as CO2e (Lbs)	N2O as CO2e (Lbs)	Total GHG as CO2 Equivalents
SPS	Maddox	S1	1,339,310,269	11,449,320	25,241	2,524	706,760	668,897.9	1,340,685,927
SPS	Maddox	S2	709,689,438	6,066,900	13,375	1,338	374,506	354,443.5	710,418,387
SPS	Maddox	S3	23,962,795	204,850	452	45	12,645	11,967.8	23,987,408
SPS	Maddox	0	0	0	0	0	0	0.0	0

Results in Short Tons

OpCo	Plant	Entity	CO2 (Short Tones)	mmBtus (NG)	CH4 (Short Tones)	N2O (Short Tones)	CH4 as CO2e (Short Tones)	N2O as CO2e (Short Tones)	Total GHG as CO2 Equivalents
SPS	Maddox	S1	669,655.13	11,449,320	12.62	1.26	353.38	334.45	670,343
SPS	Maddox	S2	354,844.72	6,066,900	6.69	0.67	187.25	177.22	355,209
SPS	Maddox	S3	11,981.40	204,850	0.23	0.02	6.32	5.98	11,994
SPS	Maddox	0	0.00	0	0.00	0.00	0.00	0.00	0
			1,036,481.25	***17,721,070***	***19.54***	***1.95***	***546.95***	***517.65***	***1,037,545.85***

Results in Metric Tones

OpCo	Plant	Entity	CO2 (Metric Tons)	mmBtus (NG)	CH4 (Metric Tons)	N2O (Metric Tons)	CH4 as CO2e (Metric Tons)	N2O as CO2e (Metric Tons)	Total GHG as CO2 Equivalents
SPS	Maddox	S1	607,501	11,449,320	11.45	1.14	320.58	303.41	608,125
SPS	Maddox	S2	321,910	6,066,900	6.07	0.61	169.87	160.77	322,240
SPS	Maddox	S3	10,869	204,850	0.20	0.02	5.74	5.43	10,881
SPS	Maddox	0	0	0	0.00	0.00	0.00	0.00	0
			940,279.97	***17,721,070***	***17.72***	***1.77***	***496.19***	***469.61***	***941,245.77***

Section 7

Information Used To Determine Emissions

Information Used to Determine Emissions shall include the following:

- ☐ If manufacturer data are used, include specifications for emissions units and control equipment, including control efficiencies specifications and sufficient engineering data for verification of control equipment operation, including design drawings, test reports, and design parameters that affect normal operation.
- ☐ If test data are used, include a copy of the complete test report. If the test data are for an emissions unit other than the one being permitted, the emission units must be identical. Test data may not be used if any difference in operating conditions of the unit being permitted and the unit represented in the test report significantly effect emission rates.
- ☐ If the most current copy of AP-42 is used, reference the section and date located at the bottom of the page. Include a copy of the page containing the emissions factors, and clearly mark the factors used in the calculations.
- ☐ If an older version of AP-42 is used, include a complete copy of the section.
- ☐ If an EPA document or other material is referenced, include a complete copy.
- ☐ Fuel specifications sheet.
- ☐ If computer models are used to estimate emissions, include an input summary (if available) and a detailed report, and a disk containing the input file(s) used to run the model. For tank-flashing emissions, include a discussion of the method used to estimate tank-flashing emissions, relative thresholds (i.e., permit or major source (NSPS, PSD or Title V)), accuracy of the model, the input and output from simulation models and software, all calculations, documentation of any assumptions used, descriptions of sampling methods and conditions, copies of any lab sample analysis.

Pages from EPA's AP-42 are included in this section, as well as the Lark-Tripp Emission Factor summary.
AP-42 Chapter 1 Section 4, Chapter 3 Section 1, and Chapter 3 Section 3.
Copies of the last set of Maddox Natural Gas samples are included.

Table 1.4-1. EMISSION FACTORS FOR NITROGEN OXIDES (NO_x) AND CARBON MONOXIDE (CO) FROM NATURAL GAS COMBUSTION[a]

Combustor Type (MMBtu/hr Heat Input) [SCC]	NO_x[b]		CO	
	Emission Factor ($lb/10^6$ scf)	Emission Factor Rating	Emission Factor ($lb/10^6$ scf)	Emission Factor Rating
Large Wall-Fired Boilers (>100) [1-01-006-01, 1-02-006-01, 1-03-006-01]				
Uncontrolled (Pre-NSPS)[c]	280	A	84	B
Uncontrolled (Post-NSPS)[c]	190	A	84	B
Controlled - Low NO_x burners	140	A	84	B
Controlled - Flue gas recirculation	100	D	84	B
Small Boilers (<100) [1-01-006-02, 1-02-006-02, 1-03-006-02, 1-03-006-03]				
Uncontrolled	100	B	84	B
Controlled - Low NO_x burners	50	D	84	B
Controlled - Low NO_x burners/Flue gas recirculation	32	C	84	B
Tangential-Fired Boilers (All Sizes) [1-01-006-04]				
Uncontrolled	170	A	24	C
Controlled - Flue gas recirculation	76	D	98	D
Residential Furnaces (<0.3) [No SCC]				
Uncontrolled	94	B	40	B

[a] Reference 11. Units are in pounds of pollutant per million standard cubic feet of natural gas fired. To convert from $lb/10^6$ scf to $kg/10^6$ m^3, multiply by 16. Emission factors are based on an average natural gas higher heating value of 1,020 Btu/scf. To convert from $1b/10^6$ scf to lb/MMBtu, divide by 1,020. The emission factors in this table may be converted to other natural gas heating values by multiplying the given emission factor by the ratio of the specified heating value to this average heating value. SCC = Source Classification Code. ND = no data. NA = not applicable.

[b] Expressed as NO_2. For large and small wall fired boilers with SNCR control, apply a 24 percent reduction to the appropriate NO_X emission factor. For tangential-fired boilers with SNCR control, apply a 13 percent reduction to the appropriate NO_X emission factor.

[c] NSPS=New Source Performance Standard as defined in 40 CFR 60 Subparts D and Db. Post-NSPS units are boilers with greater than 250 MMBtu/hr of heat input that commenced construction modification, or reconstruction after August 17, 1971, and units with heat input capacities between 100 and 250 MMBtu/hr that commenced construction modification, or reconstruction after June 19, 1984.

TABLE 1.4-2. EMISSION FACTORS FOR CRITERIA POLLUTANTS AND GREENHOUSE GASES FROM NATURAL GAS COMBUSTION[a]

Pollutant	Emission Factor ($lb/10^6$ scf)	Emission Factor Rating
CO_2[b]	120,000	A
Lead	0.0005	D
N_2O (Uncontrolled)	2.2	E
N_2O (Controlled-low-NO_X burner)	0.64	E
PM (Total)[c]	7.6	D
PM (Condensable)[c]	5.7	D
PM (Filterable)[c]	1.9	B
SO_2[d]	0.6	A
TOC	11	B
Methane	2.3	B
VOC	5.5	C

[a] Reference 11. Units are in pounds of pollutant per million standard cubic feet of natural gas fired. Data are for all natural gas combustion sources. To convert from $lb/10^6$ scf to $kg/10^6$ m^3, multiply by 16. To convert from $lb/10^6$ scf to 1b/MMBtu, divide by 1,020. The emission factors in this table may be converted to other natural gas heating values by multiplying the given emission factor by the ratio of the specified heating value to this average heating value. TOC = Total Organic Compounds. VOC = Volatile Organic Compounds.

[b] Based on approximately 100% conversion of fuel carbon to CO_2. $CO_2[lb/10^6 \text{ scf}] = (3.67)(CON)(C)(D)$, where CON = fractional conversion of fuel carbon to CO_2, C = carbon content of fuel by weight (0.76), and D = density of fuel, 4.2×10^4 $lb/10^6$ scf.

[c] All PM (total, condensible, and filterable) is assumed to be less than 1.0 micrometer in diameter. Therefore, the PM emission factors presented here may be used to estimate PM_{10}, $PM_{2.5}$ or PM_1 emissions. Total PM is the sum of the filterable PM and condensible PM. Condensible PM is the particulate matter collected using EPA Method 202 (or equivalent). Filterable PM is the particulate matter collected on, or prior to, the filter of an EPA Method 5 (or equivalent) sampling train.

[d] Based on 100% conversion of fuel sulfur to SO_2. Assumes sulfur content is natural gas of 2,000 grains/10^6 scf. The SO_2 emission factor in this table can be converted to other natural gas sulfur contents by multiplying the SO_2 emission factor by the ratio of the site-specific sulfur content (grains/10^6 scf) to 2,000 grains/10^6 scf.

TABLE 1.4-3. EMISSION FACTORS FOR SPECIATED ORGANIC COMPOUNDS FROM NATURAL GAS COMBUSTION[a]

CAS No.	Pollutant	Emission Factor ($lb/10^6$ scf)	Emission Factor Rating
91-57-6	2-Methylnaphthalene[b, c]	2.4E-05	D
56-49-5	3-Methylchloranthrene[b, c]	<1.8E-06	E
	7,12-Dimethylbenz(a)anthracene[b,c]	<1.6E-05	E
83-32-9	Acenaphthene[b,c]	<1.8E-06	E
203-96-8	Acenaphthylene[b,c]	<1.8E-06	E
120-12-7	Anthracene[b,c]	<2.4E-06	E
56-55-3	Benz(a)anthracene[b,c]	<1.8E-06	E
71-43-2	Benzene[b]	2.1E-03	B
50-32-8	Benzo(a)pyrene[b,c]	<1.2E-06	E
205-99-2	Benzo(b)fluoranthene[b,c]	<1.8E-06	E
191-24-2	Benzo(g,h,i)perylene[b,c]	<1.2E-06	E
205-82-3	Benzo(k)fluoranthene[b,c]	<1.8E-06	E
106-97-8	Butane	2.1E+00	E
218-01-9	Chrysene[b,c]	<1.8E-06	E
53-70-3	Dibenzo(a,h)anthracene[b,c]	<1.2E-06	E
25321-22-6	Dichlorobenzene[b]	1.2E-03	E
74-84-0	Ethane	3.1E+00	E
206-44-0	Fluoranthene[b,c]	3.0E-06	E
86-73-7	Fluorene[b,c]	2.8E-06	E
50-00-0	Formaldehyde[b]	7.5E-02	B
110-54-3	Hexane[b]	1.8E+00	E
193-39-5	Indeno(1,2,3-cd)pyrene[b,c]	<1.8E-06	E
91-20-3	Naphthalene[b]	6.1E-04	E
109-66-0	Pentane	2.6E+00	E
85-01-8	Phenanathrene[b,c]	1.7E-05	D

TABLE 1.4-3. EMISSION FACTORS FOR SPECIATED ORGANIC COMPOUNDS FROM NATURAL GAS COMBUSTION (Continued)

CAS No.	Pollutant	Emission Factor ($lb/10^6$ scf)	Emission Factor Rating
74-98-6	Propane	1.6E+00	E
129-00-0	Pyrene[b, c]	5.0E-06	E
108-88-3	Toluene[b]	3.4E-03	C

[a] Reference 11. Units are in pounds of pollutant per million standard cubic feet of natural gas fired. Data are for all natural gas combustion sources. To convert from $lb/10^6$ scf to $kg/10^6$ m^3, multiply by 16. To convert from $1b/10^6$ scf to lb/MMBtu, divide by 1,020. Emission Factors preceeded with a less-than symbol are based on method detection limits.

[b] Hazardous Air Pollutant (HAP) as defined by Section 112(b) of the Clean Air Act.

[c] HAP because it is Polycyclic Organic Matter (POM). POM is a HAP as defined by Section 112(b) of the Clean Air Act.

[d] The sum of individual organic compounds may exceed the VOC and TOC emission factors due to differences in test methods and the availability of test data for each pollutant.

TABLE 1.4-4. EMISSION FACTORS FOR METALS FROM NATURAL GAS COMBUSTION[a]

CAS No.	Pollutant	Emission Factor ($lb/10^6$ scf)	Emission Factor Rating
7440-38-2	Arsenic[b]	2.0E-04	E
7440-39-3	Barium	4.4E-03	D
7440-41-7	Beryllium[b]	<1.2E-05	E
7440-43-9	Cadmium[b]	1.1E-03	D
7440-47-3	Chromium[b]	1.4E-03	D
7440-48-4	Cobalt[b]	8.4E-05	D
7440-50-8	Copper	8.5E-04	C
7439-96-5	Manganese[b]	3.8E-04	D
7439-97-6	Mercury[b]	2.6E-04	D
7439-98-7	Molybdenum	1.1E-03	D
7440-02-0	Nickel[b]	2.1E-03	C
7782-49-2	Selenium[b]	<2.4E-05	E
7440-62-2	Vanadium	2.3E-03	D
7440-66-6	Zinc	2.9E-02	E

[a] Reference 11. Units are in pounds of pollutant per million standard cubic feet of natural gas fired. Data are for all natural gas combustion sources. Emission factors preceeded by a less-than symbol are based on method detection limits. To convert from $lb/10^6$ scf to $kg/10^6$ m^3, multiply by l6. To convert from $lb/10^6$ scf to 1b/MMBtu, divide by 1,020.

[b] Hazardous Air Pollutant as defined by Section 112(b) of the Clean Air Act.

Table 3.1-1. EMISSION FACTORS FOR NITROGEN OXIDES (NO_X) AND CARBON MONOXIDE (CO) FROM STATIONARY GAS TURBINES

Emission Factors[a]				
Turbine Type	Nitrogen Oxides		Carbon Monoxide	
Natural Gas-Fired Turbines[b]	(lb/MMBtu)[c] (Fuel Input)	Emission Factor Rating	(lb/MMBtu)[c] (Fuel Input)	Emission Factor Rating
Uncontrolled	3.2 E-01	A	8.2 E-02[d]	A
Water-Steam Injection	1.3 E-01	A	3.0 E-02	A
Lean-Premix	9.9 E-02	D	1.5 E-02	D
Distillate Oil-Fired Turbines[e]	(lb/MMBtu)[f] (Fuel Input)	Emission Factor Rating	(lb/MMBtu)[f] (Fuel Input)	Emission Factor Rating
Uncontrolled	8.8 E-01	C	3.3 E-03	C
Water-Steam Injection	2.4 E-01	B	7.6 E-02	C
Landfill Gas-Fired Turbines[g]	(lb/MMBtu)[h] (Fuel Input)	Emission Factor Rating	(lb/MMBtu)[h] (Fuel Input)	Emission Factor Rating
Uncontrolled	1.4 E-01	A	4.4 E-01	A
Digester Gas-Fired Turbines[j]	(lb/MMBtu)[k] (Fuel Input)	Emission Factor Rating	(lb/MMBtu)[k] (Fuel Input)	Emission Factor Rating
Uncontrolled	1.6 E-01	D	1.7 E-02	D

[a] Factors are derived from units operating at high loads (≥ 80 percent load) only. For information on units operating at other loads, consult the background report for this chapter (Reference 16), available at "www.epa.gov/ttn/chief".

[b] Source Classification Codes (SCCs) for natural gas-fired turbines include 2-01-002-01, 2-02-002-01, 2-02-002-03, 2-03-002-02, and 2-03-002-03. The emission factors in this table may be converted to other natural gas heating values by multiplying the given emission factor by the ratio of the specified heating value to this average heating value.

[c] Emission factors based on an average natural gas heating value (HHV) of 1020 Btu/scf at 60°F. To convert from (lb/MMBtu) to (lb/10^6 scf), multiply by 1020.

[d] It is recognized that the uncontrolled emission factor for CO is higher than the water-steam injection and lean-premix emission factors, which is contrary to expectation. The EPA could not identify the reason for this behavior, except that the data sets used for developing these factors are different.

[e] SCCs for distillate oil-fired turbines include 2-01-001-01, 2-02-001-01, 2-02-001-03, and 2-03-001-02.

[f] Emission factors based on an average distillate oil heating value of 139 MMBtu/10^3 gallons. To convert from (lb/MMBtu) to (lb/10^3 gallons), multiply by 139.

[g] SCC for landfill gas-fired turbines is 2-03-008-01.

[h] Emission factors based on an average landfill gas heating value of 400 Btu/scf at 60°F. To convert from (lb/MMBtu), to (lb/10^6 scf) multiply by 400.

[j] SCC for digester gas-fired turbine is 2-03-007-01.

[k] Emission factors based on an average digester gas heating value of 600 Btu/scf at 60°F. To convert from (lb/MMBtu) to (lb/10^6 scf) multiply by 600.

Table 3.1-2a. EMISSION FACTORS FOR CRITERIA POLLUTANTS AND GREENHOUSE GASES FROM STATIONARY GAS TURBINES

Emission Factors[a] - Uncontrolled				
Pollutant	Natural Gas-Fired Turbines[b]		Distillate Oil-Fired Turbines[d]	
	(lb/MMBtu)[c] (Fuel Input)	Emission Factor Rating	(lb/MMBtu)[e] (Fuel Input)	Emission Factor Rating
CO_2[f]	110	A	157	A
N_2O	0.003[g]	E	ND	NA
Lead	ND	NA	1.4 E-05	C
SO_2	0.94S[h]	B	1.01S[h]	B
Methane	8.6 E-03	C	ND	NA
VOC	2.1 E-03	D	4.1 E-04[j]	E
TOC[k]	1.1 E-02	B	4.0 E-03[l]	C
PM (condensible)	4.7 E-03[l]	C	7.2 E-03[l]	C
PM (filterable)	1.9 E-03[l]	C	4.3 E-03[l]	C
PM (total)	6.6 E-03[l]	C	1.2 E-02[l]	C

[a] Factors are derived from units operating at high loads (≥ 80 percent load) only. For information on units operating at other loads, consult the background report for this chapter (Reference 16), available at "www.epa.gov/ttn/chief". ND = No Data, NA = Not Applicable.

[b] SCCs for natural gas-fired turbines include 2-01-002-01, 2-02-002-01 & 03, and 2-03-002-02 & 03.

[c] Emission factors based on an average natural gas heating value (HHV) of 1020 Btu/scf at 60°F. To convert from (lb/MMBtu) to (lb/10^6 scf), multiply by 1020. Similarly, these emission factors can be converted to other natural gas heating values.

[d] SCCs for distillate oil-fired turbines are 2-01-001-01, 2-02-001-01, 2-02-001-03, and 2-03-001-02.

[e] Emission factors based on an average distillate oil heating value of 139 MMBtu/10^3 gallons. To convert from (lb/MMBtu) to (lb/10^3 gallons), multiply by 139.

[f] Based on 99.5% conversion of fuel carbon to CO_2 for natural gas and 99% conversion of fuel carbon to CO_2 for distillate oil. CO_2 (Natural Gas) [lb/MMBtu] = (0.0036 scf/Btu)(%CON)(C)(D), where %CON = weight percent conversion of fuel carbon to CO_2, C = carbon content of fuel by weight, and D = density of fuel. For natural gas, C is assumed at 75%, and D is assumed at 4.1 E+04 lb/10^6scf. For distillate oil, CO_2 (Distillate Oil) [lb/MMBtu] = (26.4 gal/MMBtu) (%CON)(C)(D), where C is assumed at 87%, and the D is assumed at 6.9 lb/gallon.

[g] Emission factor is carried over from the previous revision to AP-42 (Supplement B, October 1996) and is based on limited source tests on a single turbine with water-steam injection (Reference 5).

[h] All sulfur in the fuel is assumed to be converted to SO_2. S = percent sulfur in fuel. Example, if sulfur content in the fuel is 3.4 percent, then S = 3.4. If S is not available, use 3.4 E-03 lb/MMBtu for natural gas turbines, and 3.3 E-02 lb/MMBtu for distillate oil turbines (the equations are more accurate).

[j] VOC emissions are assumed equal to the sum of organic emissions.

[k] Pollutant referenced as THC in the gathered emission tests. It is assumed as TOC, because it is based on EPA Test Method 25A.

[l] Emission factors are based on combustion turbines using water-steam injection.

Table 3.1-3. EMISSION FACTORS FOR HAZARDOUS AIR POLLUTANTS FROM NATURAL GAS-FIRED STATIONARY GAS TURBINES[a]

Emission Factors[b] - Uncontrolled		
Pollutant	Emission Factor (lb/MMBtu)[c]	Emission Factor Rating
1,3-Butadiene[d]	< 4.3 E-07	D
Acetaldehyde	4.0 E-05	C
Acrolein	6.4 E-06	C
Benzene[e]	1.2 E-05	A
Ethylbenzene	3.2 E-05	C
Formaldehyde[f]	7.1 E-04	A
Naphthalene	1.3 E-06	C
PAH	2.2 E-06	C
Propylene Oxide[d]	< 2.9 E-05	D
Toluene	1.3 E-04	C
Xylenes	6.4 E-05	C

[a] SCC for natural gas-fired turbines include 2-01-002-01, 2-02-002-01, 2-02-002-03, 2-03-002-02, and 2-03-002-03. Hazardous Air Pollutants as defined in Section 112 (b) of the *Clean Air Act*.

[b] Factors are derived from units operating at high loads (≥ 80 percent load) only. For information on units operating at other loads, consult the background report for this chapter (Reference 16), available at "www.epa.gov/ttn/chief".

[c] Emission factors based on an average natural gas heating value (HHV) of 1020 Btu/scf at 60°F. To convert from (lb/MMBtu) to (lb/10^6 scf), multiply by 1020. These emission factors can be converted to other natural gas heating values by multiplying the given emission factor by the ratio of the specified heating value to this heating value.

[d] Compound was not detected. The presented emission value is based on one-half of the detection limit.

[e] Benzene with SCONOX catalyst is 9.1 E-07, rating of D.

[f] Formaldehyde with SCONOX catalyst is 2.0 E-05, rating of D.

Table 3.3-1. EMISSION FACTORS FOR UNCONTROLLED GASOLINE AND DIESEL INDUSTRIAL ENGINES[a]

Pollutant	Gasoline Fuel (SCC 2-02-003-01, 2-03-003-01)		Diesel Fuel (SCC 2-02-001-02, 2-03-001-01)		EMISSION FACTOR RATING
	Emission Factor (lb/hp-hr) (power output)	Emission Factor (lb/MMBtu) (fuel input)	Emission Factor (lb/hp-hr) (power output)	Emission Factor (lb/MMBtu) (fuel input)	
NO_x	0.011	1.63	0.031	4.41	D
CO	0.439	62.7	6.68 E-03	0.95	D
SO_x	5.91 E-04	0.084	2.05 E-03	0.29	D
PM-10[b]	7.21 E-04	0.10	2.20 E-03	0.31	D
CO_2[c]	1.08	154	1.15	164	B
Aldehydes	4.85 E-04	0.07	4.63 E-04	0.07	D
TOC					
Exhaust	0.015	2.10	2.47 E-03	0.35	D
Evaporative	6.61 E-04	0.09	0.00	0.00	E
Crankcase	4.85 E-03	0.69	4.41 E-05	0.01	E
Refueling	1.08 E-03	0.15	0.00	0.00	E

[a] References 2,5-6,9-14. When necessary, an average brake-specific fuel consumption (BSFC) of 7,000 Btu/hp-hr was used to convert from lb/MMBtu to lb/hp-hr. To convert from lb/hp-hr to kg/kw-hr, multiply by 0.608. To convert from lb/MMBtu to ng/J, multiply by 430. SCC = Source Classification Code. TOC = total organic compounds.

[b] PM-10 = particulate matter less than or equal to 10 μm aerodynamic diameter. All particulate is assumed to be ≤ 1 μm in size.

[c] Assumes 99% conversion of carbon in fuel to CO_2 with 87 weight % carbon in diesel, 86 weight % carbon in gasoline, average BSFC of 7,000 Btu/hp-hr, diesel heating value of 19,300 Btu/lb, and gasoline heating value of 20,300 Btu/lb.

Lark-Tripp and AP-42 Emission Factors
EPRI Lark-Tripp Program

CAS	Element	Gas-Fired Boiler				Gas-Fired CT/CC			
		Reference	EPRI, lb/TBtu	AP-42, lb/1e6 scf	Custom, lb/TBtu	Reference	EPRI, lb/TBtu	AP-42, lb/1e6 scf	Custom, lb/TBtu
7664-41-7	Ammonia	EPRI	0	0	0	EPRI	0	0	0
7647-01-0	Chloride	Custom	0	0	0	Custom	0	0	0
7664-39-3	Fluoride	Custom	0	0	0	Custom	0	0	0
7664-93-9	SO2, tons	Custom	0	0	0	Custom	0	0	0
N010	Antimony Compounds	Custom	0	0	0	Custom	0	0	0
N020	Arsenic Compounds	EPRI	0.23	0.0002	0	AP-42	0	0.0002	0
N040	Barium Compounds	EPRI	4	0.0044	0	AP-42	0	0.0044	0
N050	Beryllium Compounds	AP-42	0	1.2E-5	0	AP-42	0	1.2E-5	0
N078	Cadmium Compounds	AP-42	0.04	0.0011	0	AP-42	0	0.0011	0
N090	Chromium Compounds	EPRI	1.1	0.0014	0	AP-42	0	0.0014	0
N096	Cobalt Compounds	EPRI	0.08	8.4E-5	0	AP-42	0	8.4E-5	0
N100	Copper Compounds	EPRI	0.7	0.00085	0	AP-42	0	0.00085	0
N420	Lead Compounds	EPRI	0.4	0.0005	0	AP-42	0	0.0005	0
N450	Manganese Compounds	EPRI	0.4	0.00038	0	AP-42	0	0.00038	0
N458	Mercury Compounds	EPRI	0.0008	0.00026	0	AP-42	0	0.00026	0
N495	Nickel Compounds	EPRI	2.4	0.0021	0	AP-42	0	0.0021	0
N725	Selenium Compounds	AP-42	0	2.4E-5	0	AP-42	0	2.4E-5	0
N740	Silver Compounds	Custom	0	0	0	Custom	0	0	0
N760	Thallium Compounds	Custom	0	0	0	Custom	0	0	0
N770	Vanadium Compounds	EPRI	1.8	0.0023	0	AP-42	0	0.0023	0
N982	Zinc Compounds	AP-42	0	0.029	0	AP-42	0	0.029	0
7723-14-0	Phosphorus	EPRI	0	0	0	EPRI	0	0	0
75-07-0	Acetaldehyde	Custom	0	0	0	AP-42	0	0.0408	0
98-86-2	Acetophenone	Custom	0	0	0	Custom	0	0	0
107-02-8	Acrolein	Custom	0	0	0	AP-42	0	0.006528	0
107-05-1	Allyl chloride	Custom	0	0	0	Custom	0	0	0
120-12-7	Anthracene	AP-42	0	2.4E-6	0	Custom	0	2.4E-6	0
71-43-2	Benzene	EPRI	0.8	0.0021	0	AP-42	0	0.01224	0
191-24-2	Benzo(g,h,i)perylene	AP-42	0	1.2E-6	0	Custom	0	1.2E-6	0
100-44-7	Benzyl chloride	Custom	0	0	0	Custom	0	0	0
92-52-4	Biphenyl	Custom	0	0	0	Custom	0	0	0
74-83-9	Bromomethane	Custom	0	0	0	Custom	0	0	0
123-72-8	Butyraldehyde	Custom	0	0	0	Custom	0	0	0
75-15-0	Carbon disulfide	Custom	0	0	0	Custom	0	0	0
108-90-7	Chlorobenzene	Custom	0	0	0	Custom	0	0	0
75-00-3	Chloroethane	Custom	0	0	0	Custom	0	0	0

Lark-Tripp and AP-42 Emission Factors
EPRI Lark-Tripp Program

CAS	Element	Gas-Fired Boiler				Gas-Fired CT/CC			
		Reference	EPRI, lb/TBtu	AP-42, lb/1e6 scf	Custom, lb/TBtu	Reference	EPRI, lb/TBtu	AP-42, lb/1e6 scf	Custom, lb/TBtu
67-66-3	Chloroform	Custom	0	0	0	Custom	0	0	0
74-87-3	Chloromethane	Custom	0	0	0	Custom	0	0	0
1319-77-3	Cresol (mixed isomers)	Custom	0	0	0	Custom	0	0	0
106-44-5	p-Cresol	Custom	0	0	0	Custom	0	0	0
132-64-9	Dibenzofuran	Custom	0	0	0	Custom	0	0	0
106-93-4	1,2-Dibromoethane	Custom	0	0	0	Custom	0	0	0
84-74-2	Dibutyl phthalate	Custom	0	0	0	Custom	0	0	0
541-73-1	1,3-Dichlorobenzene	Custom	0	0	0	Custom	0	0	0
106-46-7	1,4-Dichlorobenzene	Custom	0	0	0	Custom	0	0	0
25321-22-6	Dichlorobenzene (mixed isomers)	AP-42	0	0.0012	0	Custom	0	0.0012	0
75-09-2	Dichloromethane	Custom	0	0	0	Custom	0	0	0
117-81-7	Di(2-ethylhexyl) phthalate	Custom	0	0	0	Custom	0	0	0
131-11-3	Dimethyl phthalate	Custom	0	0	0	Custom	0	0	0
121-14-2	2,4-Dinitrotoluene	Custom	0	0	0	Custom	0	0	0
606-20-2	2,6-Dinitrotoluene	Custom	0	0	0	Custom	0	0	0
100-41-4	Ethylbenzene	Custom	0	0	0	AP-42	0	0.03264	0
75-34-3	Ethylidene dichloride	Custom	0	0	0	Custom	0	0	0
50-00-0	Formaldehyde	EPRI	175	0.075	0	AP-42	0	0.7242	0
110-54-3	n-Hexane	EPRI	0.42	1.8	0	Custom	0	1.8	0
78-59-1	Isophorone	Custom	0	0	0	Custom	0	0	0
74-88-4	Methyl iodide	Custom	0	0	0	Custom	0	0	0
108-10-1	Methyl isobutyl ketone	Custom	0	0	0	Custom	0	0	0
80-62-6	Methyl methacrylate	Custom	0	0	0	Custom	0	0	0
91-20-3	Naphthalene	AP-42	0	0.00061	0	AP-42	0	0.001326	0
134-32-7	alpha-Naphthylamine	Custom	0	0	0	Custom	0	0	0
85-01-8	Phenanthrene	AP-42	0	1.7E-5	0	Custom	0	1.7E-5	0
108-95-2	Phenol	Custom	0	0	0	Custom	0	0	0
POM	Polycyclic Organic Matter	EPRI	0.0045	0.000698	0	AP-42	0	0.00357	0
123-38-6	Propionaldehyde	Custom	0	0	0	Custom	0	0	0
100-42-5	Styrene	Custom	0	0	0	Custom	0	0	0
127-18-4	Tetrachloroethylene	Custom	0	0	0	Custom	0	0	0
108-88-3	Toluene	EPRI	10	0.0034	0	AP-42	0	0.1326	0
120-82-1	1,2,4-Trichlorobenzene	Custom	0	0	0	Custom	0	0	0
71-55-6	1,1,1-Trichloroethane	Custom	0	0	0	Custom	0	0	0
75-69-4	Trichlorofluoromethane	Custom	0	0	0	Custom	0	0	0
108-05-4	Vinyl acetate	Custom	0	0	0	Custom	0	0	0

Lark-Tripp and AP-42 Emission Factors
EPRI Lark-Tripp Program

CAS	Element	Gas-Fired Boiler				Gas-Fired CT/CC			
		Reference	EPRI, lb/TBtu	AP-42, lb/1e6 scf	Custom, lb/TBtu	Reference	EPRI, lb/TBtu	AP-42, lb/1e6 scf	Custom, lb/TBtu
75-01-4	Vinyl chloride	Custom	0	0	0	Custom	0	0	0
1330-20-7	Xylene (mixed isomers)	Custom	0	0	0	AP-42	0	0.06528	0
95-47-6	o-Xylene	Custom	0	0	0	Custom	0	0	0
N150	Dioxin and Dioxin-like Compounds	Custom	0	0	0	Custom	0	0	0
1746-01-6	2,3,7,8-Tetrachlorodibenzo-dioxin	Custom	0	0	0	Custom	0	0	0
40321-76-4	1,2,3,7,8-Pentachlorodibenzo-dioxin	Custom	0	0	0	Custom	0	0	0
39227-28-6	1,2,3,4,7,8-Hexachlorodibenzo-dioxin	Custom	0	0	0	Custom	0	0	0
57653-85-7	1,2,3,6,7,8-Hexachlorodibenzo-dioxin	Custom	0	0	0	Custom	0	0	0
19408-74-3	1,2,3,7,8,9-Hexachlorodibenzo-dioxin	Custom	0	0	0	Custom	0	0	0
35822-46-9	1,2,3,4,6,7,8-Heptachlorodibenzo-dioxin	Custom	0	0	0	Custom	0	0	0
3268-87-9	1,2,3,4,6,7,8,9-Octachlorodibenzo-dioxin	Custom	0	0	0	Custom	0	0	0
51207-31-9	2,3,7,8-Tetrachlorodibenzofuran	Custom	0	0	0	Custom	0	0	0
57117-41-6	1,2,3,7,8-Pentachlorodibenzofuran	Custom	0	0	0	Custom	0	0	0
57117-31-4	2,3,4,7,8-Pentachlorodibenzofuran	Custom	0	0	0	Custom	0	0	0
70648-26-9	1,2,3,4,7,8-Hexachlorodibenzofuran	Custom	0	0	0	Custom	0	0	0
57117-44-9	1,2,3,6,7,8-Hexachlorodibenzofuran	Custom	0	0	0	Custom	0	0	0
72918-21-9	1,2,3,7,8,9-Hexachlorodibenzofuran	Custom	0	0	0	Custom	0	0	0
60851-34-5	2,3,4,6,7,8-Hexachlorodibenzofuran	Custom	0	0	0	Custom	0	0	0
67562-39-4	1,2,3,4,6,7,8-Heptachlorodibenzofuran	Custom	0	0	0	Custom	0	0	0
55673-89-7	1,2,3,4,7,8,9-Heptachlorodibenzofuran	Custom	0	0	0	Custom	0	0	0
39001-02-0	1,2,3,4,6,7,8,9-Octachlorodibenzofuran	Custom	0	0	0	Custom	0	0	0
N590	Polycyclic aromatic compounds	EPRI	0.0015	0	0	Custom	0	0	0
56-55-3	Benzo(a)anthracene	AP-42	0	1.8E-6	0	Custom	0	1.8E-6	0
50-32-8	Benzo(a)pyrene	AP-42	0	1.2E-6	0	Custom	0	1.2E-6	0
224-42-0	Dibenz(a,j)acridine	Custom	0	0	0	Custom	0	0	0
53-70-3	Dibenzo(a,h)anthracene	AP-42	0	1.2E-6	0	Custom	0	1.2E-6	0
193-39-5	Indeno[1,2,3-cd]pyrene	AP-42	0	1.8E-6	0	Custom	0	1.8E-6	0
3697-24-3	5-Methylchrysene	Custom	0	0	0	Custom	0	0	0

SHIPPING ADDRESS:
2800 WESTOVER STREET
ODESSA, TEXAS 79764

MOBILE ANALYTICAL

LABORATORIES, INC.

BILLING ADDRESS:
P.O. BOX 69210
ODESSA, TEXAS 79769-0210

LABORATORY IN ODESSA
PHONE (432) 337-4744 | FAX (432) 337-8781

LAB 76215

C6+ GAS ANALYSIS REPORT

COMPANY . . .	XCEL	STATION	520020
LEASE/PLANT .	CUNNINGHAM	PRESSURE PSIG . . .	606
OPERATOR . .	XCEL	TEMPERATURE °F . . .	79
SAMPLE	MADDOX MARKWEST	SAMPLE TYPE . . .	SPOT
CYLINDER . .	707	SAMPLED / RECEIVED .	09/20/24
H2S PPM . . .	0.3	SAMPLED BY	SR

FRACTIONAL ANALYSIS

COMPONENT	MOL %	GPM C2+	GPM C5+
NITROGEN	2.716	0.000	0.000
CARBON DIOXIDE . .	0.000	0.000	0.000
METHANE	93.003	0.000	0.000
ETHANE	4.140	1.103	0.000
PROPANE	0.132	0.036	0.000
ISO-BUTANE	0.000	0.000	0.000
N-BUTANE	0.008	0.003	0.000
ISO-PENTANE	0.000	0.000	0.000
N-PENTANE	0.000	0.000	0.000
HEXANES PLUS . . .	0.001	0.000	0.000
H2S	0.000	0.000	0.000
TOTALS	100.000	1.142	0.000

CALC. SP.GRAVITY 0.588

BTU/CU. FT. (14.650 PSIA, 60 °F)
CALC. GROSS WET 998
CALC. GROSS DRY 1015

NOTES:

DISTRIBUTION:
OCTAVIO NAYARES

REPORT DATE: 09/26/24

SHIPPING ADDRESS:
2800 WESTOVER STREET
ODESSA, TEXAS 79764

MOBILE ANALYTICAL
LABORATORIES, INC.

BILLING ADDRESS:
P.O. BOX 69210
ODESSA, TEXAS 79769-0210

LABORATORY IN ODESSA
PHONE (432) 337-4744 | FAX (432) 337-8781

09/26/24 **GAS EXTENDED SULFUR ANALYSIS** **LAB # 76216**

XCEL: CUNNINGHAM
MADDOX MARKWEST: 520020

	ppm
Hydrogen Sulfide	ND
Carbonyl Sulfide	ND
Methyl Mercaptan	0.5
Ethyl Mercaptan	0.1
Dimethyl Sulfide	ND
Carbon Disulfide	ND
I-Propyl Mercaptan	ND
T-Butyl Mercaptan	ND
N-Propyl Mercaptan	ND
Methyl Ethyl Sulfide	ND
S-Butyl Mercaptan/Thiophene	ND
I-Butyl Mercaptan	ND
Diethyl Sulfide	ND
N-Butyl Mercaptan	ND
Dimethyl Disulfide	ND
3-Methyl Thiophene	ND
2-Methyl Thiophene	ND
Dimethyl Thiophene	ND
Diethyl Disulfide	ND
Trimethyl Thiophene	ND
Undetermined Organic Sulfur	ND
Total Sulfur	0.6

Test Methods: H2S by ASTM D4084, Other Sulfur compounds by Capillary GC with SCD Detector ASTM D5504.

SAMPLED: 09/20/24 Operator: Xcel
RUN: 09/25/24
ND = NONE DETECTED (< 0.1 PPM)
Distribution:
OCTAVIO NAYARES

NOTES:
H2S Field Measurement: 0.29 PPM

This page left intentionally blank

Section 8

Map(s)

A map such as a 7.5 minute topographic quadrangle showing the exact location of the source. The map shall also include the following:

The UTM or Longitudinal coordinate system on both axes	An indicator showing which direction is north
A minimum radius around the plant of 0.8km (0.5 miles)	Access and haul roads
Topographic features of the area	Facility property boundaries
The name of the map	The area which will be restricted to public access
A graphical scale	

Maps of the surrounding area are included in this section.

Google earth

miles 7

km 10

Google earth

miles 1
km 2

UNITED STATES
DEPARTMENT OF THE INTERIOR
GEOLOGICAL SURVEY

MONUMENT QUADRANGLE
NEW MEXICO-LEA CO.
15 MINUTE SERIES (TOPOGRAPHIC)

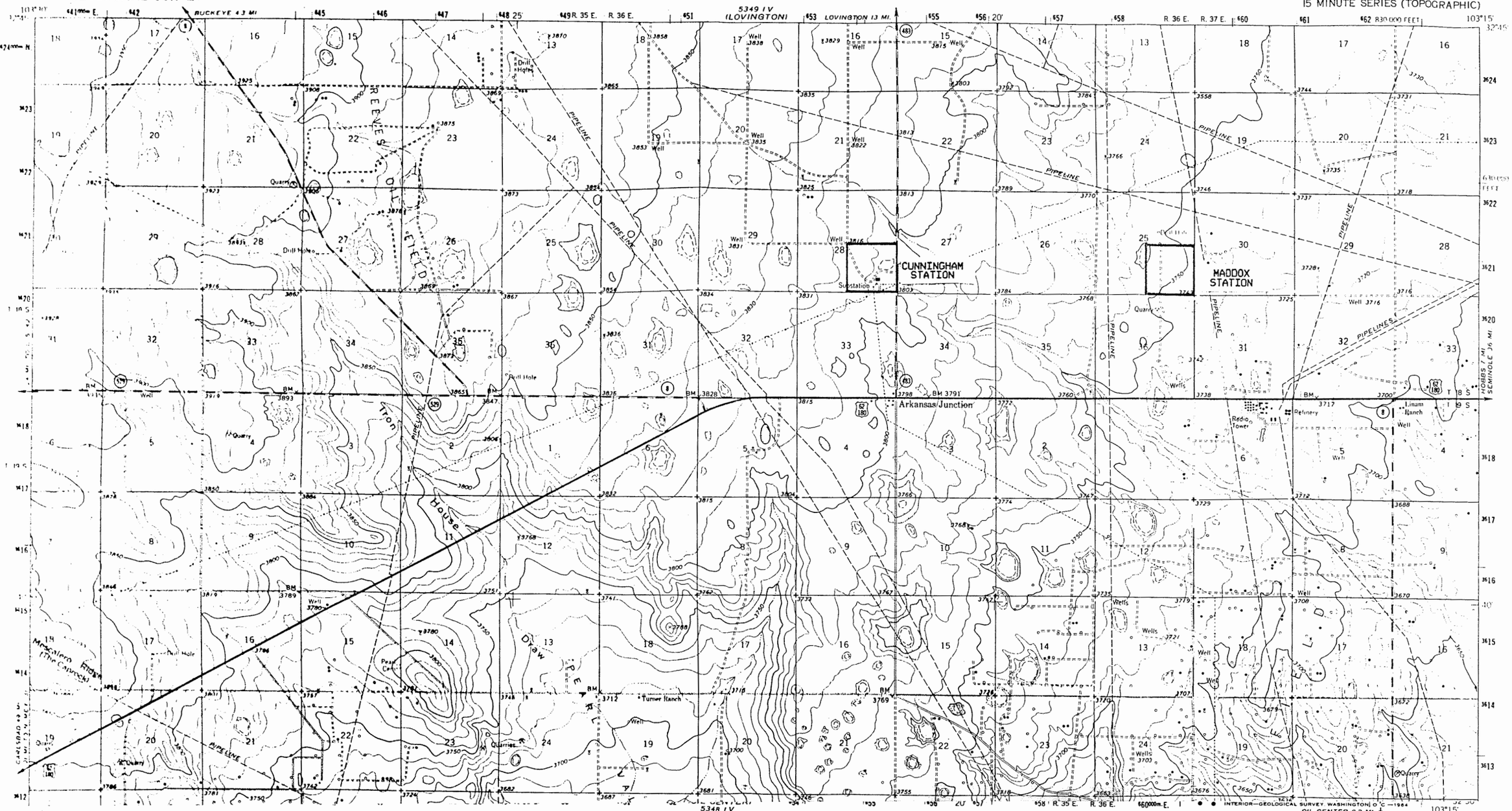

Mapped, edited, and published by the Geological Survey

Control by USGS and USC&GS

Planimetry by photogrammetric methods from aerial photographs taken 1957. Topography by planetable surveys 1963

Polyconic projection. 1927 North American datum
10 000 foot grid based on New Mexico coordinate system, east zone
1000 meter Universal Transverse Mercator grid ticks,
zone 13, shown in blue

SCALE 1:62500

1 ½ 0 1 2 3 4 MILES

3000 0 3000 6000 9000 12000 15000 18000 21000 FEET

1 .5 0 1 2 3 4 5 KILOMETERS

CONTOUR INTERVAL 10 FEET
DATUM IS MEAN SEA LEVEL

UTM GRID AND 1963 MAGNETIC NORTH DECLINATION AT CENTER OF SHEET

NEW MEXICO
QUADRANGLE LOCATION

ROAD CLASSIFICATION

Heavy-duty — Light-duty
Medium-duty — Unimproved dirt
U.S. Route — State Route

THIS MAP COMPLIES WITH NATIONAL MAP ACCURACY STANDARDS
FOR SALE BY U.S. GEOLOGICAL SURVEY, DENVER 25, COLORADO OR WASHINGTON 25, D.C.
A FOLDER DESCRIBING TOPOGRAPHIC MAPS AND SYMBOLS IS AVAILABLE ON REQUEST

DRAWING NUMBER C-ENVAIR-MADX-3

Southwestern PUBLIC SERVICE Company

EMISSION POINTS
GENERAL SITE PLAN

Section 9

Proof of Public Notice

(for NSR applications submitting under 20.2.72 or 20.2.74 NMAC)
(This proof is required by: 20.2.72.203.A.14 NMAC "Documentary Proof of applicant's public notice")

☐ **I have read the AQB "Guidelines for Public Notification for Air Quality Permit Applications"**
This document provides detailed instructions about public notice requirements for various permitting actions. It also provides public notice examples and certification forms. Material mistakes in the public notice will require a re-notice before issuance of the permit.

Unless otherwise allowed elsewhere in this document, the following items document proof of the applicant's Public Notification. Please include this page in your proof of public notice submittal with checkmarks indicating which documents are being submitted with the application.

New Permit and **Significant Permit Revision** public notices must include all items in this list.

Technical Revision public notices require only items 1, 5, 9, and 10.

Per the Guidelines for Public Notification document mentioned above, include:

1. ☐ A copy of the certified letter receipts with post marks (20.2.72.203.B NMAC)
2. ☐ A list of the places where the public notice has been posted in at least four publicly accessible and conspicuous places, including the proposed or existing facility entrance. (e.g: post office, library, grocery, etc.)
3. ☐ A copy of the property tax record (20.2.72.203.B NMAC).
4. ☐ A sample of the letters sent to the owners of record.
5. ☐ A sample of the letters sent to counties, municipalities, and Indian tribes.
6. ☐ A sample of the public notice posted and a verification of the local postings.
7. ☐ A table of the noticed citizens, counties, municipalities and tribes and to whom the notices were sent in each group.
8. ☐ A copy of the public service announcement (PSA) sent to a local radio station and documentary proof of submittal.
9. ☐ A copy of the classified or legal ad including the page header (date and newspaper title) or its affidavit of publication stating the ad date, and a copy of the ad. When appropriate, this ad shall be printed in both English and Spanish.
10. ☐ A copy of the display ad including the page header (date and newspaper title) or its affidavit of publication stating the ad date, and a copy of the ad. When appropriate, this ad shall be printed in both English and Spanish.
11. ☐ A map with a graphic scale showing the facility boundary and the surrounding area in which owners of record were notified by mail. This is necessary for verification that the correct facility boundary was used in determining distance for notifying land owners of record.

Title V Permit Application. Not required.

This page left intentionally blank

Section 10

Written Description of the Routine Operations of the Facility

---

A written description of the routine operations of the facility. Include a description of how each piece of equipment will be operated, how controls will be used, and the fate of both the products and waste generated. For modifications and/or revisions, explain how the changes will affect the existing process. In a separate paragraph describe the major process bottlenecks that limit production. The purpose of this description is to provide sufficient information about plant operations for the permit writer to determine appropriate emission sources.

SPS uses an economic dispatch system to set the production requirements on its power plants. The system takes into consideration instantaneous demand and the load placed on its power grid to determine which plants are operated, and how much electrical production is required at each of its facilities. Other information used by this dispatch system is the cost of fuel for a given plant at the time, the efficiency of the given unit, and the availability of capacity (whether the unit is operating at its maximum capacity at the time).

Unit 1 is primarily a baseload unit and operates nearly continuously. Units 2 and 3 are peaking units and run when required. Being gas turbines they can start up relatively quickly after being called upon. Unit 2 is limited to 5,350 hours of operation and Unit 3 is limited to 850 hours of operation. See Section 4 for a Process Flow Sheet.

Unit 2 is equipped with a water injection system to limit the NOX emissions from the unit. The injection system runs at all times that the unit is running in normal operation mode. The water flow is controlled by the unit load automatically. The facility maintains a Compliance Assurance Monitoring Plan for the water injection system and keeps records to show compliance. The Compliance Assurance Monitoring Plan is included in this Section.

No post-combustion pollutant removal or destruction is performed for any of the Maddox Units.

The only process bottlenecks are the size of the electric generating units. Sufficient natural gas is available at the site to run all three units.

Compliance Assurance Monitoring (CAM) Plan

Maddox Station Unit 2 Combustion Turbine NOx Control

Southwestern Public Service Company, dba Xcel Energy

Lea County, New Mexico

July 1, 2021

Contents

INTRODUCTION: 3

CAM PLAN ELEMENTS 3

SAMPLE CAM REPORT 5

APPENDIX 1. FUNCTIONAL DESCRIPTION OF WATER INJECTION SYSTEM 6

FIGURE 1. GENERAL LAYOUT – TOP AND SIDE VIEW OF PLANT ARRANGEMENT 25

FIGURE 2. CROSS SECTION DRAWING OF GAS TURBINE 26

FIGURE 3. CROSS SECTION DRAWING OF FUEL NOZZLE 27

Introduction:

Maddox Station consists of three electric generating units: Unit 1 a 133 Megawatt (MW) steam electric generating plant; Unit 2, a 94 MW Westinghouse 501B4 Econo-Pac combustion turbine, and Unit 3, a 15 MW General Electric combustion turbine. All three of the generating units are fueled primarily by pipeline quality natural gas, and have the capability for combustion of fuel oil. In addition to the generating units, the plant has water wells, water gathering and treatment facilities, fire fighting system, waste water disposal system, and other utilities necessary to support a central electric generating plant.

The plant is located 8 miles west of Hobbs, Lea County, New Mexico. The plant operates under authority of the Operating Permit issued by the State of New Mexico Environment Department (NMED), Air Quality Division.

This plan was developed in response to a request by NMED to implement CAM (Compliance Assurance Monitoring) for the NOx Control System on Unit 2. Unit 2 was constructed in 1976, (before the widespread use of low-NOx burners on combustion turbines). Plant layout and main components are shown on Figure 1. Figure 2 is a cross sectional view of the combustion turbine component. It is equipped with water injection, which sprays approximately 30 gallons per minute of deionized water into the combustion chamber for the purpose of minimizing peak flame temperatures and resultant formation of thermal NOx in the exhaust gases of the turbine. The water flow is varied with load, using a feedback loop to adjust the injection rate, and generally follows the curve in Appendix 1 (The curve presented on Sheet 29T0455-1(sheet 65 of 68) “Required Water Flow vs Megawatts”). Compliance evaluation will consist of comparing the totalized flow for each month versus the total megawatts, with the curve, and with the periodic performance evaluations to show that water injection rate has not changed significantly. Each of the dual fuel combustor nozzles (Figure 3) is connected to a water supply header which delivers water to the nozzle tips for injection. During Startup, Shutdown, and Malfunctions the water injection system is disabled. Appendix 1 describes the water injection system, its functional components, and operation. Operators in the control room monitor the flow of water to the injection system, and manually record totalized flows at the end of each run. These readings, along with the other performance and production records of the turbine are recorded and form the basis for this CAM plan.

CAM Plan Elements

1. The control room is continuously manned, and control room operators record information required to assure the correct operation of the water injection system.
    a. Total water injection flow is recorded for each turbine run.
    b. Service hours and gross generation (MWH) is recorded for each turbine run.
    c. If the water injection system shuts down, plant operators are directed to immediately make an effort to determine the cause and re-establish injection flow.

d. If water flow cannot be restored expeditiously, the turbine run will be terminated, EXCEPT when there is a declared system emergency, or shutdown of this turbine would cause a system emergency, threatening the stability of the electric transmission system for southeast New Mexico and/or other nearby areas. In the case of a system emergency condition, the turbine will continue to run until it can be safely shutdown.
e. Operations will log and report all malfunctions in the water injection system, the actions taken to resolve the malfunction, and the results of all corrective actions, including all emergencies in which the turbine was operated without water injection.
f. NMED will be notified in accordance with of the requirements of the operating permit for any excursions (operations outside established conditions) .
g. All logged information will be reported to the Operations Superintendent for inclusion in the CAM report.

2. Flow meters and injection controls will be maintained and calibrated annually, or as necessary.
    a. Records of all maintenance and calibration activities will be maintained and made available for inspection upon request.
3. A CAM report for Unit 2 will be prepared and submitted to NMED every six months with the semi-annual monitoring report as required by the operating permit. The attached “Sample CAM Report” will serve as a template for the operating summary.
4. At specific times, Southwest Power Pool, the electrical grid operator, requires operational capability tests (Policy EOP005) to be run that require shutdown almost immediately after the water flow is initiated. During these specific tests, the water injection is not required to be within the curves.

SAMPLE CAM REPORT

Maddox Station Unit S2 NOx Control Compliance Assurance Monitoring Summary YYYY

Month	Year	Service Hours	Monthly Water Injection (gal)	Gross Gen (MWh)	Avg. Gen (MW)	Monthly Water Flow Avg. gpm	Water Injection Operational ? (YES/NO) *	Water Flow in Range for month?	** Was Data Collection Operational All Times?	Comment/Explanation
Jan										
Feb										
Mar										
Apr										
May										
Jun										
Jul										
Aug										
Sep										
Oct										
Nov										
Dec										

* Was water injection operating at all times during this operation period when Unit 2 was on-line?
** Was monitoring system collecting data all times when Unit 2 was on-line?
If "NO", provide explanation including dates, times, causes, etc. Attach additional sheets if necessary.

Additional Comments:

There was a total of 0 excursions, lasting a total of 0 hours, from the CAM water injection flow rate requirements.
There was a total of 0 monitor downtime events, lasting a total of 0 hours from the water injection flow monitoring equipment.

Maddox Station Unit 2
CAM Report for NOx Control (Water Injection) Page 1 of 1 3/31/2015

1.15 WATER INJECTION SYSTEM W-501 GAS TURBINE

The Water Injection System is provided for the purpose of reducing NO_X (Oxides of Nitrogen) in the Gas Turbine exhaust gases. The level of NO_X emissions is proportional to gas turbine power output. The system is shown schematically in Figure 1.

Water of proper quality and free of contaminants, supplied by the customer, enters into the system through a strainer (Item 1) and then to a three phase, 460 VAC motor driven centrifugal pump (Item 2). The high pressure water is then filtered (Item 3) and continues through a flowmeter (Item 4), water control valve (Item 5), and isolation valve (Item 6). The control valve regulates the flow as a function of load using the flowmeter as a feedback signal to the controller (Item 7). The water isolation valve provides redundant and positive shut-off protection. A check valve (Item 8), downstream of the water isolation valve, prevents backflow from the gas turbine. The water is pumped through the atomizing air manifold (Item 9), and into the gas turbine combustion system via the atomizing air nozzle passages. Two check valves (Items 10, 11) for redundancy, are provided in the atomizing air line to prevent water from entering the compressed air supply (Item 12). A water drain valve (Item 13), is provided which opens with turbine shutdown draining the water from the air/water manifold. An atomizing air purge valve (Not associated with water injection), (Item 14), opens with the closure of the atomizing air isolation/regulation valve to provide continuous purge of the nozzle air passages during turbine run. However, with water injection operation this purge line must be closed off to prevent water from backflowing into the purge line. Therefore, a water injection purge system isolation valve (Item 15) is provided which closes as the water injection isolation valve opens.

The water injection system is started automatically by the Gas Turbine Controls System when the generator breaker closes. A CCO to the water pump motor starter closes, thus energizing the motor and starting the water pump. The water injection pump discharge pressure switch, 63-WI, (Located in Pressure Switch and Gauge Cabinet), reads pump pressure and activates at a set operating level - opening the water injection isolation valve and closing the purge system isolation valve, via solenoid valve 20-WI located in the Pressure Switch and Gauge Cabinet. If 63-WI does not activate within (15) seconds, the water pump motor will be de-energized. The pump motor will also be de-energized if 63-WI is de-activated when the system is running in a steady state condition.

NOTE

If the pump shuts down due to an abnormal condition, a pushbutton switch on the water injection panel of the motor control center must be pressed to reset the system before the next starting attempt.

The water isolation valve is equipped with a limit switch which indicates an open or closed valve. The limit switch is wired to the Control System as a CCI and gives an alarm signal, "H_2O OFF", when both the water isolation valve and generator breaker are closed.

When the CCO to the water pump motor starter is closed, the Control System generates an analog signal voltage as a function of MW load. This analog output is transmitted to the controller via the water isolation valve limit switch. The limit switch prevents the analog signal from opening the water control valve until the isolation valve is open. When the isolation valve is open, a pneumatic controller (Item 7) compares the analog signal with the flowmeter feedback signal and changes the position of the water control valve accordingly.

The computer analog signal feeds into a voltage to pressure transducer (Item 16) and then through a high-limit relay (Item 17) (Limits control signal as function of maximum system water flow) before input to the controller. The flow meter feedback circuit consists of a frequency to current transducer (Item 18) into a current to pressure transducer (Item 19) before input to the other side of the controller.

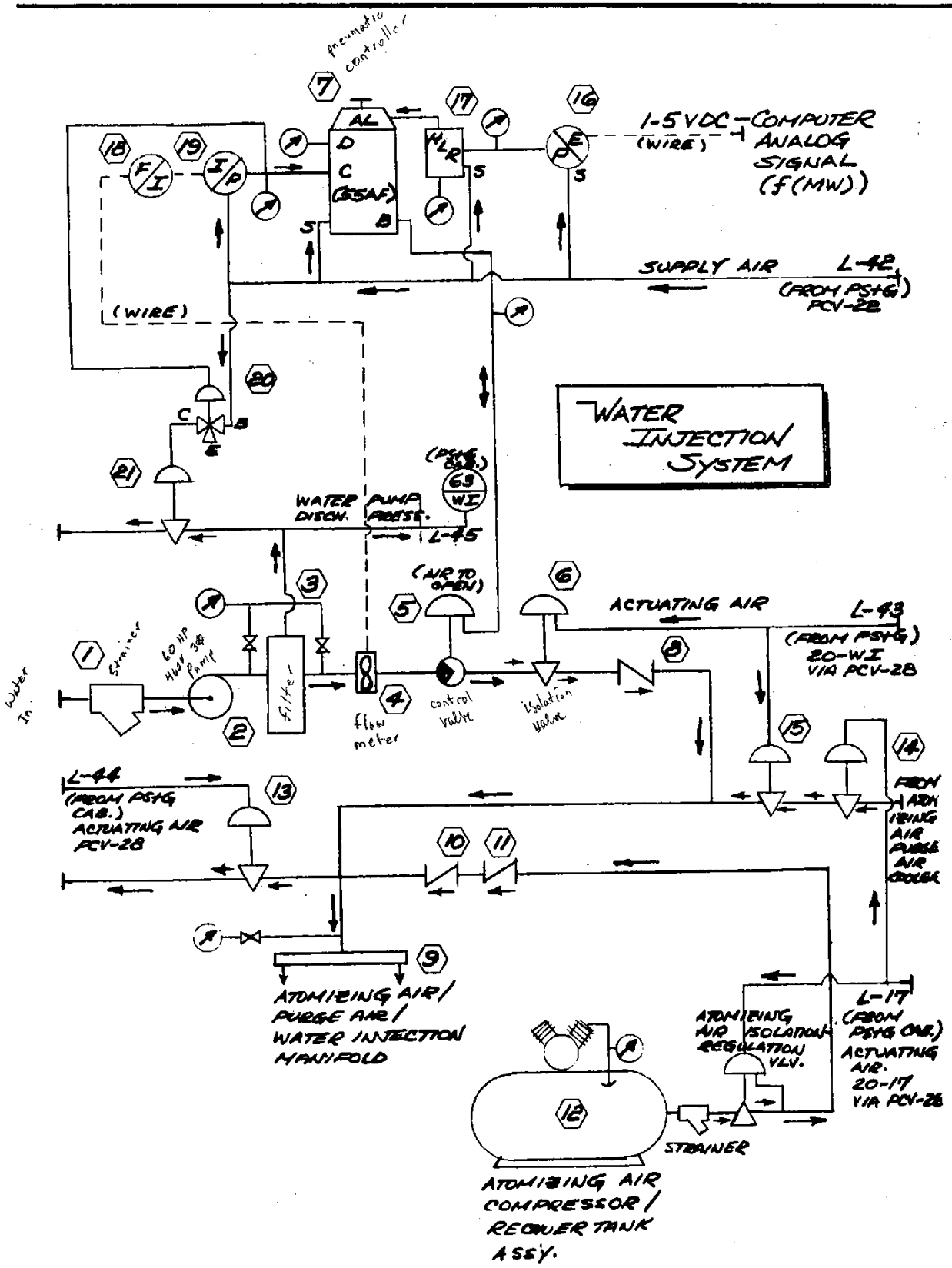

Figure 1. Water Injection System Schematic

min 36 gpm
max 135 gpm @ 365 psig

A three-way pressure operated pilot valve (N/O) (Item 20), receiving its signal pressure from the flowmeter input, closes at a pre-set pressure (approximately with generator breaker closure) directing actuating air to the customer water return valve (Item 21) closing it, thus diverting full water injection system flow to the gas turbine instead of back to the customer water supply tank.

The water injection system will shut down if:

1) Pressure switch 63/WI (water pump discharge pressure) deactivates with loss of pressure.

2) The blade path thermocouple spread exceeds a specified limit.

3) The blade path thermocouple average is below a specified limit.

NOTE

When either 2 or 3 (above) occur, the operator can manually reset and restart the water injection system two times in a one-hour period.

The water isolation valve will close if:

1) The overspeed trip relay is not set.

2) Pressure switch 63/WI is open.

3) When a turbine shutdown occurs the water isolation valve closes simultaneously with the fuel overspeed trip valve, and the water system is automatically de-energized.

SYSTEM COMPONENTS

Components of this system and their function are as follows:

STRAINER

This coarse strainer at the entrance of the system keeps foreign objects from entering the water injection pump.

WATER INJECTION PUMP

This is a high-speed centrifugal type pump driven by a 60 HP, 460 VAC, 3-phase, 60 Hz motor with a normal speed of 3500 rpm. A step-up gearbox is used to increase motor speed. The pump capability is 135 gpm at 365 psig. Minimum inlet pressure is 15 psig which must be supplied by customer. The minimum discharge flow of 36 gpm is necessary to prevent overheating the pump.

This pump is planned to be maintained at the facility as a backup. See attached for current pump information.

FILTER

This is a 50 micron fibrous-medium cartridge filter that removes particles to protect the flowmeter, control valves, and turbine nozzles.

FLOWMETER

This fluidic-type meter has no moving parts. It generates an electronic pulse that is sent to frequency-to-current converter. The flow meter output varies linearly with rate of flow.

CONTROL VALVE

This is a diaphragm type, vee-ball valve that controls water flow to the turbine. The valve is pneumatically actuated by a signal from the controller located in control box to limit water flow.

ISOLATION VALVE

This is a pneumatically-operated diaphragm, plug-type valve that is opened when the generator breaker is closed and closes when breaker opens. Actuating air is supplied through solenoid valve, 20-WI, in pressure switch and gauge cabinet. A limit switch will cause an alarm should the valve close during turbine operation.

CHECK VALVES

A check valve is located in series with isolation valve to prevent pressurized air from entering water system. Redundant check valves are installed on the atomizing air line to prevent water from entering the air system.

BYPASS VALVE

This is a pneumatically-operated diaphragm valve to allow a minimum water flow through the pump. The valve is controlled by a pilot valve and water is returned to storage. The bypass valve is

closed when turbine water requirements are above minimum pump flow.

HIGH LIMIT RELAY

This pneumatic relay, located in control box, limits the water flow to a maximum preset value.

TRANSDUCER, CURRENT-TO-PRESSURE

This transducer, located in control box, converts the independent P-50 signal to a pressure signal that is fed to controller.

CONTROLLER

This pneumatic pressure controller, located in control box, has proportional and reset control. The output signal determines position of control valve. The signal is a result of two inputs; one feeding back from flow meter and the other originating from P-50 computer. The computer analog signal is a function of generator megawatts.

PRESSURE SWITCH, 63-WI

A pressure switch is located in the pressure switch and gauge cabinet to shut down pump should discharge pressure fall below set limit.

WATER INJECTION

NAME & FUNCTION	SCHEM IT. NO.	DRAWING OR LOCATION	SETTING	FIELD SETTING
Strainer - Water Injection	261	241T984 on 2549T74	Maximum Pressure Drop= 5 PSID.	
Pump - Water Injection	262	242T362 on 2549T74	Min. Inlet: 15 PSIG Min. Bypass: 36 GPM 405 PSI at 0 GPM	
Filter - Water Injection (Pump discharge side)	263	241T982 on 2549T74	Maximum Pressure Drop = 10 PSID	
Gage-Filter Differential pressure (water injection)		On Water Filter (#263)	Maximum Pressure Drop = 10 PSID.	
Pump bypass valve (Water Injection)	268	242T365 on 2550T69	Use Hand Wheel to Establish min. flow of 36 GPM.	
Pilot solenoid valve for water injection pump by-pass valve	269	242T365 on 2550T69	Open - 6 PSIG (Port - D on 164-A)	
Control Valve Water Injection	265	242T503 on 2549T74	See Curve 4 Page 68 See Page 62	
Flow Meter - Water Injection	264	241T981 on 2549T74	See Instruction Book.	

WATER INJECTION

NAME & FUNCTION	SCHEM IT. NO.	DRAWING OR LOCATION	SETTING	FIELD SETTING
Check Valve, Water Injection	267	242T363 on 2549T74	Open with water flow to turbine	
Drain Valve, Water Injection	277	242T364 on 2551T51	Close with 40 PSIG air. Open with 0 PSIG air. See Page 58.	
Check valves (2) Atomizing air supply	275 & 276	2092T84	Open with atom. air. on. Close with water injection on.	
High limit relay-limits E/P output	273	242T200 on 2550T69 Flow Controller	Set at 12.3 PSIG to limit water flow at 120 GPM.	
Water Injection Regulator		242T503 on 2549T74 mounted on item 265	Set at 20 PSIG TOL = ≠ 0.5 PSIG	
63-WL Pressure Switch Water supply pressure - monitors low water pressure.	192	242T966 PS & G Cab.	See Sheet 34	
20-WL Solenoid valve - water injection	201	242T966 PS & G Cab.	Energize: P to C Isol. vlv. open. De-Energize: C to E Isol. vlv. closed	
Water Isolation Valve Limit Switch	-	242T409 on 2549T74 mounted on item 266	Set to close when Isol. Vlv. is 4% open. (See Page 61).	

Control Setting Instructions
29T0455-1 (Sheet 55 of 68)

WATER INJECTION

NAME & FUNCTION	SCHEM IT. NO.	DRAWING OR LOCATION	SETTING	FIELD SETTING
Isolation Valve, Water Injection	266	242T409 on 2549T74	Open with 40 PSIG Close with 0 PSIG	
E/P transducer (Volts DC to PSIG)	274	242T200 on 2550T70 Flow Controller	Range VDC — PSIG 1 — 3 5 — 15	
Flow Controller 55AF	272	242T200 on 2550T70	See Pg. 58, 59, 60.	
I/P Transducer (amps to PSIG)	271	242T200 on 2550T70 Flow Controller	Range MA — PSIG 4 — 3 20 — 15	
F/I Transducer (Cycles per second to amps)	270	242T200 on 2550T70 Flow Controller	Range CPS — MA 0 — 4 7.5 — 20	
Gage - Setpoint ** Dual Scale (Red Pointer)		242T200 on 2550T70 Connection D, 55AF Controller	Range GPM — PSIG 0 — 3 150 — 15	
Gage - Process Variable ** Dual Scale (Black Pointer) ** Duplex Gage (Receiver)		242T200 on 2550T70 Connection C on 55AF Controller	Range GPM — PSIG 0 — 3 150 — 15	
Gage - Output Controller (LOC. B).		242T200 on 2550T70 55AF Controller	0-30 PSIG	

NAME & FUNCTION	SCHEM IT. NO.	DRAWING OR LOCATION	SETTING	FIELD SETTING
Gage - Control Point * (Black Pointer)		242T200 on 2550T70 55AF - Top Hat Connection	3-15 PSIG	
Gage - High Limit * (Red Pointer) *Duplex Gage (Receiver)		242T200 on 2550T70 High Limit relay output	15 PSIG Range 3 - 15 PSIG	

ZERO & TRACKING MOORE CONTROLLERS

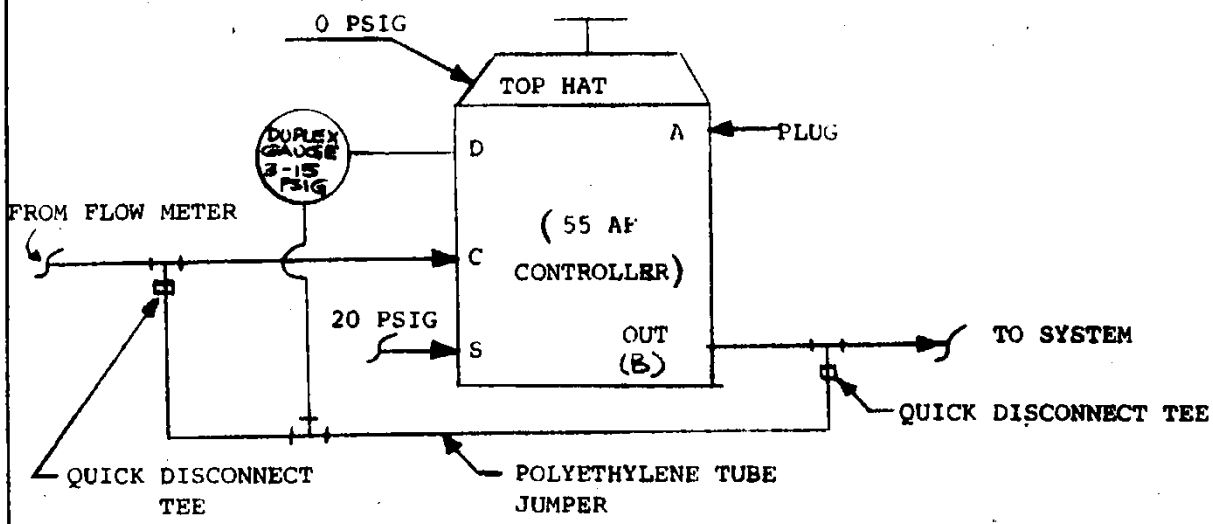

Ref: ABOVE SCHEMATIC

1. Install a temporary pneumatic jumper between the controller output and connection "C" Process connection. Connect into existing quick disconnect fittings.

2. Use existing calibrated (3 to 15) "DUPLEX POINTER" GAGE (Part No. 6847-7 & 1060107) as shown above. DO NOT PERFORM THIS CHECK UNLESS THE PROPER GAGE IS ON HAND.

3. Put INPUT-OUTPUT PLATE ON "INCREASE-INPUT & DECREASE-OUTPUT".

4. Put FEEDBACK PLATE ON "WITH MANUAL BYPASS".

5. Put "PROPORTIONAL BAND" at MIN SETTING (%), and "RESET" near 0.

6. Provide an external supply of 20 PSIG into the controller with all other air supplies off.

7. Adjust the controller spring (set-point) between 0 and 3 PSIG (10% scale) to make the pressure at PORT "C" Coincide with pressure at PORT "D". Note readings on DUPLEX GAGE. If C and D do not coincide, go to step 8.

8. Adjust the zero of the controller (SCREW MARKED "ZERO") until the reading of PORT "C" coincides with the reading of PORT "D".

   NOTE: Turning the "ZERO" adjusting screw clockwise will decrease the pressure at PORT "C".

9. Adjust the controller spring (set-point) between 13 PSIG and 15 PSIG (90% - 100% of scale). Note the readings on DUPLEX GAGE.

10. If the reading of PORT "C" does not coincide with the reading of PORT "D" adjust the TRACKING screw (SCREW MARKED "TRACKING") until the PORT "C" reading is 3X the noted difference on the opposite side of the PORT "D" reading.

    EXAMPLE: If the reading at PORT "D" is 13.0 PSIG and the reading at PORT "C" is 12.9 PSIG, adjust the tracking screw counterclockwise until the reading at PORT "C" is 13.3 PSIG.

    NOTE: A tendency of the PORT "C" pointer to drift upward will be caused by the reset action of the controller. Wait until the process pointer stops moving before making any adjustments.

11. Reset the ZERO until the indices coincide.

12. Repeat steps 7, 8 and 9 to confirm that pointers of "PORTS "C" and "D" coincide throughout the entire range. "ZERO" and "TRACKING" are now complete.

13. Set controllers as per specific sections of these control settings. Refer to settings for 55AF controller.

WATER FLOW CONTROLLER

1. Water injection flow controller (55 AF). (ITEM 272)

Dwg. No. 242T200
Location: Mechanical Skid
Type: Proportional & Reset
Function: Controls water flow to gas turbine as a function of megawatts.

A. See Section on Zero and Tracking Controllers (page 55).
B. Put INPUT - OUTPUT PLATE on "INCREASE-DECREASE".
C. Put FEEDBACK Plate on:

"WITHOUT MANUAL BYPASS"

D. Put PROPORTIONAL BAND & RESET knobs temporarily at min settings.
E. Setting:

CONTROL POINT INPUT CONN"R"	SETPOINT GAUGE	OUTPUT
3 PSIG	Adjust spring to go above 3 PSIG Set-point	20 PSIG
3 PSIG	Adjust spring to go below 3 PSIG Set-point	0 PSIG

NOTE: Set-point = Control Point + Spring (in this case, setpoint = spring).

F. Be sure to back the spring off completely after this test.

Final Proportional Band & Reset Adjustments

Set P.B. at 100% and reset rate at 0.1 minutes per repeat and field adjust for transient response and stability at steady state.

WATER ISOLATION VALVE

Schematic Item 266.

Reference Drawing 242T409 on 2549T74.

With no pressure on the valve body, the valve shall stroke from closed to open with 6 to 30 psig actuator pressure.

Full open-30 psig
Full closed-6 psig

WATER DRAIN VALVE

Reference Drawing 242T362 on 2551T51. ITEM 277.

With no pressure on the valve body, the valve shall stroke from open to closed with 6 to 30 psig actuator pressure.

Full Open-6 psig
Full closed-30 psig

WATER RETURN VLV., PILOT OPERATED

Reference Drawing 242T365 on 2550T69. ITEM 268.

Full open-0 psig
Full Closed-20 psig

WATER INJECTION CONTROL VALVE

Schematic Items: 265

Reference Drawing: 242T503 on 2549T74.

I. Valve should be fully closed.

II. Set initial actuation spring tension so that it requires a diaphragm pressure of 3 psig to initiate valve motion.

III. Flow check control valve prior to starting. See sheets 63, 64.

IV. Vlv. Strokes 3 to 15 psig.

Full Open-15 psig
Full closed-3 psig

WATER FLOW METER
CALIBRATION
(ITEM 264)

1. Break Water pump discharge line (1-1/2 in. IPS) downstream of isolation valve 242T409 at the pipe rack. Connect the pump discharge line via a hose adapter to a convenient drainage area outdoors using 2.00 in. IPS pipe. A container for measuring volume may be placed at the end of the discharge line.

2. A glove hand valve (2.00 in. IPS) must be installed downstream of the isolation valve to simulate the pressure drop across the nozzle (270A388007).

3. Open the 2.00 in. Hand valve downstream of the isolation valve.

4. Open the isolation valve by placing a jumper across pin 160 and 161P in the PS & G Cabinet.

5. Provide 20 PSIG supply air to the controller (242T200) by putting the instrument air supply solenoid (20-35) to the "OFF" position. Solenoid 20-35 is in the PS & G Cabinet.

6. Connect the water pump 242T362 to a water supply.
   NOTE: for this test, drinking water may be used.
   150 GPM and 10 PSIG suction pressure).

7. Disconnect computer signal from E/P and install a 6 VDC volt box signal. The control valve (242T503) must be opened by the E/P which is energized by a 1 to 5 volt power supply. Set the initial voltage to 2.5 VDC for pump startup so that the control valve is open.

8. The water return valve 242T365 is to be set to close when the switching valve signal is 5.9 psig (process variable gauge). Set pilot valve to actuate return valve at 10 PSIG.

9. Do this prior to water simulation test.
Perform the zero and tracking calibration on the Moore 55AF controller (See P.58, 59 and set per P.60).

10. Before the pump is energized by the manual position at the MCC, be certain that there is water pressure at the pump suction, (10 PSIG) and (150 GPM) available, and that all valves downstream of the pump are open. This includes the hand valves, isolaton valve, control valve, and return valve.

11. Energize the pump motor.

12. The return (bypass) valve should close at 10 PSIG.

13. Put 4.2VDC across the E/P transducer. This will give 12.3 PSI at the control point gage.

14. Close the hand valve until the process variable pressure is 12.3 PSIG.

15. With steps 13 & 14 accomplished, the flow should be 120.0 GPM ± 5 GPM.

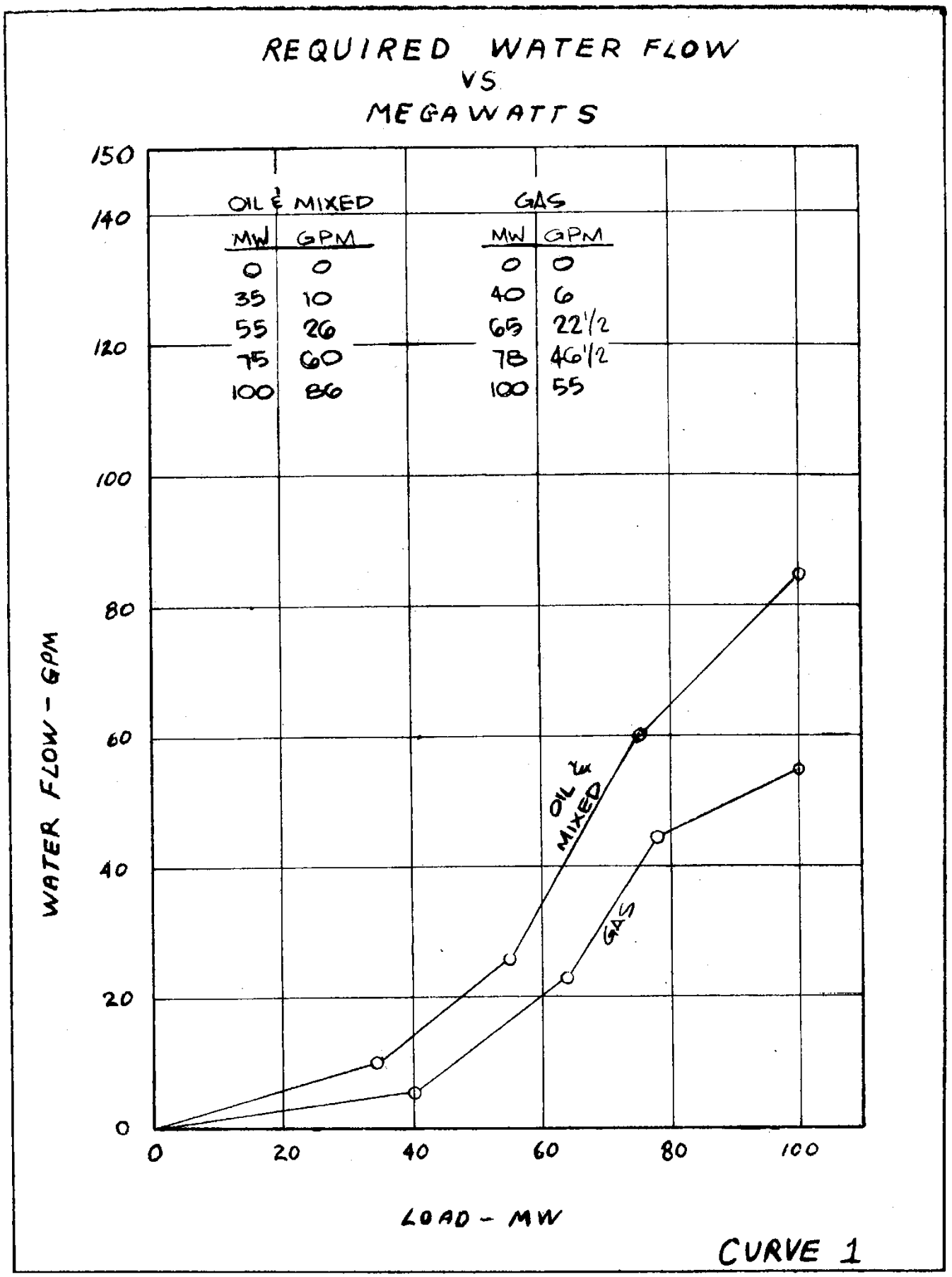
REQUIRED WATER FLOW
VS
MEGAWATTS
OIL & MIXED
MW GPM
0 0
35 10
55 26
75 60
100 86
GAS
MW GPM
0 0
40 6
65 22 1/2
78 46 1/2
100 55
OIL & MIXED
GAS
WATER FLOW - GPM
LOAD - MW
0
20
40
60
80
100
120
140
150
CURVE 1

COMPUTER OUTPUT VS. MEGAWATTS

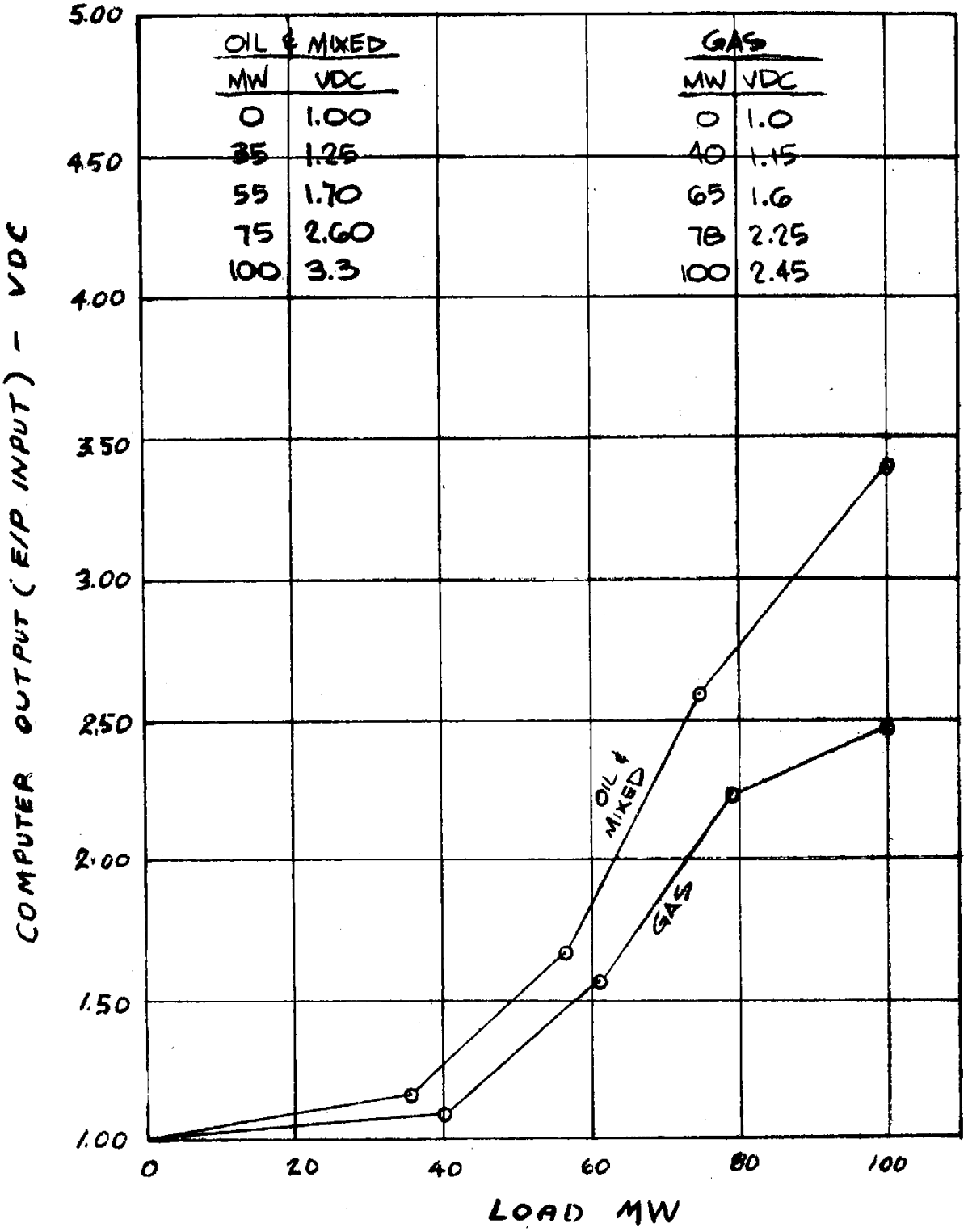

CURVE 2

COMPUTER OUTPUT
vs.
E/P OUTPUT

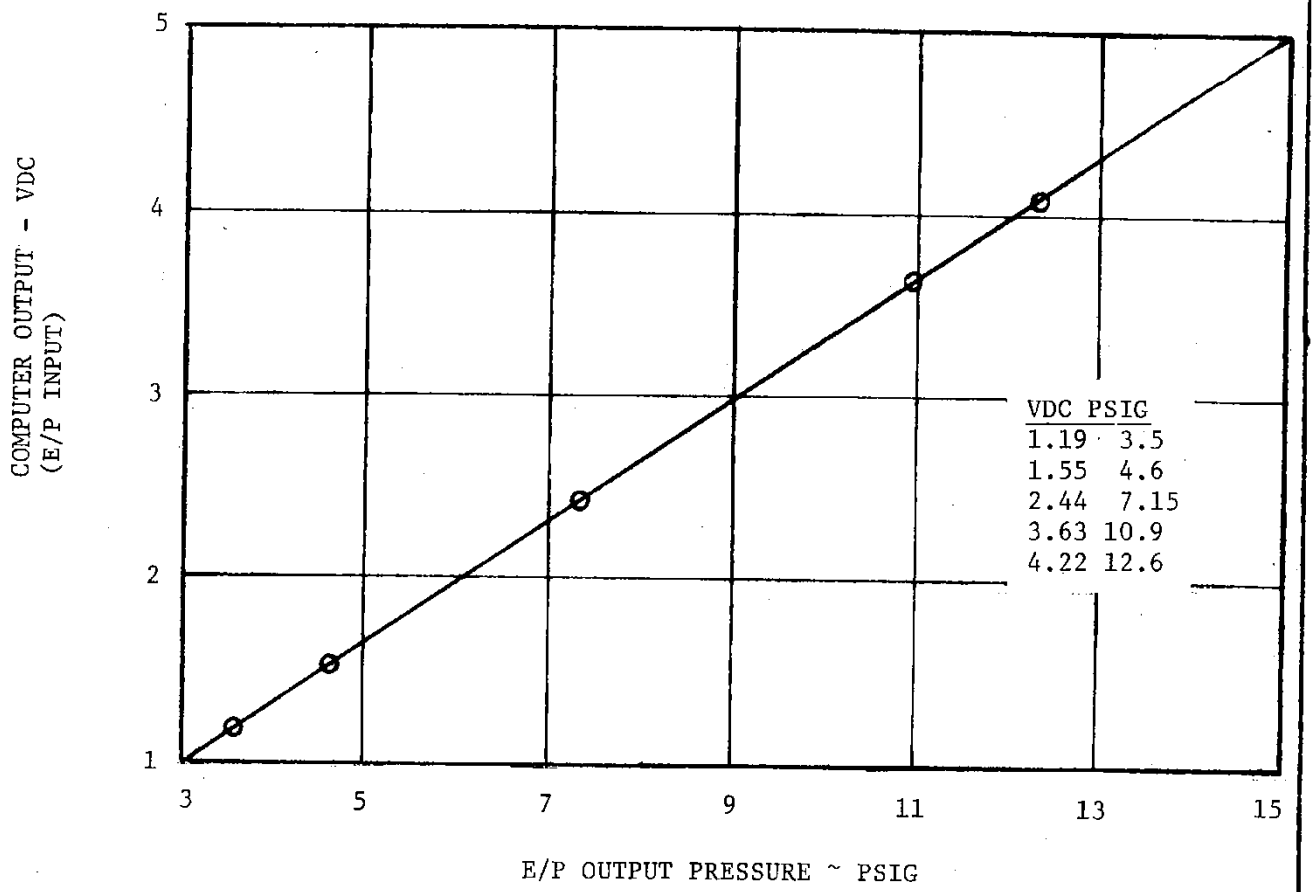

CURVE 3

WATER FLOW TO TURBINE
vs.
FLOW METER OUTPUT

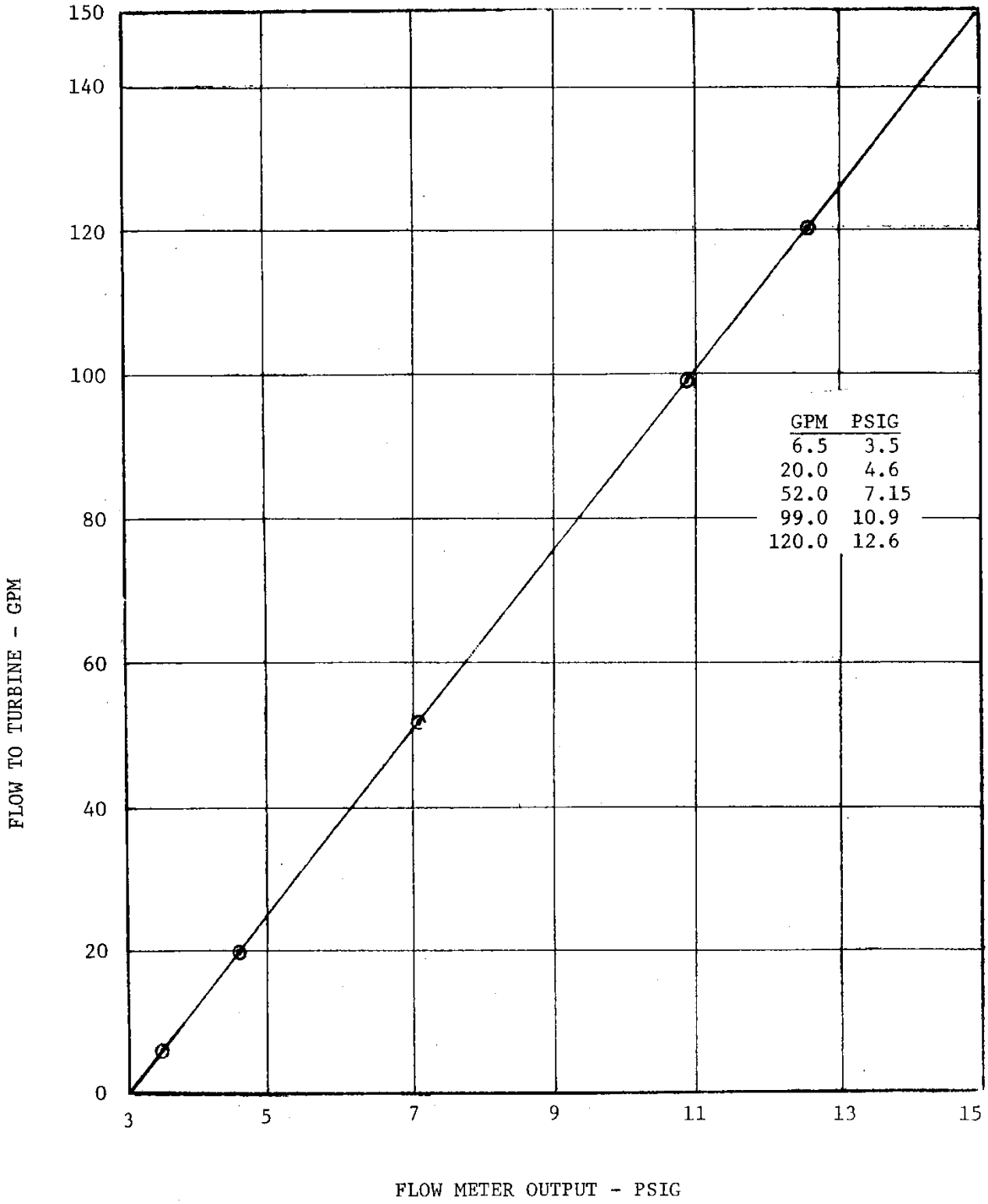

CURVE 4

Figure 1. General Layout – Top and Side View of Plant Arrangement

Auxiliary Transformers – 4160 volt starting motor transformer and 480 volt auxiliary transformer, both with 13.8 kV primary.

Isolated Phase Bus – provides connection from generator to oil circuit breaker and includes surge protection.

Generator Oil Circuit Breaker – frame-mounted 15 KV, 6000 Amp. continuous, 1500 MVA interrupting.

Enclosure housings are furnished for combustion turbine (field erected) and all auxiliary modules (factory erected). Required piping, wiring, doors, louvers, heating and lighting are included as appropriate.

Operation
The ECONO-PAC is started through pushbutton action which sequences the turbine from a cold condition to synchronous speed where synchronizing and loading of the unit to the predetermined output is completed. The operator may interrupt the sequence before synchronizing, and load the unit in incremental steps. The operator may start or stop various auxiliary loads at the local panel for test or maintenance purposes.

The plant utilizes a minimum amount of external a-c power during stand-by or running.

Purchaser Supplied Items
Based upon Westinghouse supplying hardware only, the following listing presents major items to be supplied by the Purchaser.

State and local permits and licenses
Site preparation and foundations
Grounding grid
Erection supervision and labor
Utilities for construction
Plant connections at oil circuit breaker
Operating personnel
Fuel and lubricants
External piping
Bulk H_2 and CO_2 supply

Plant Arrangement

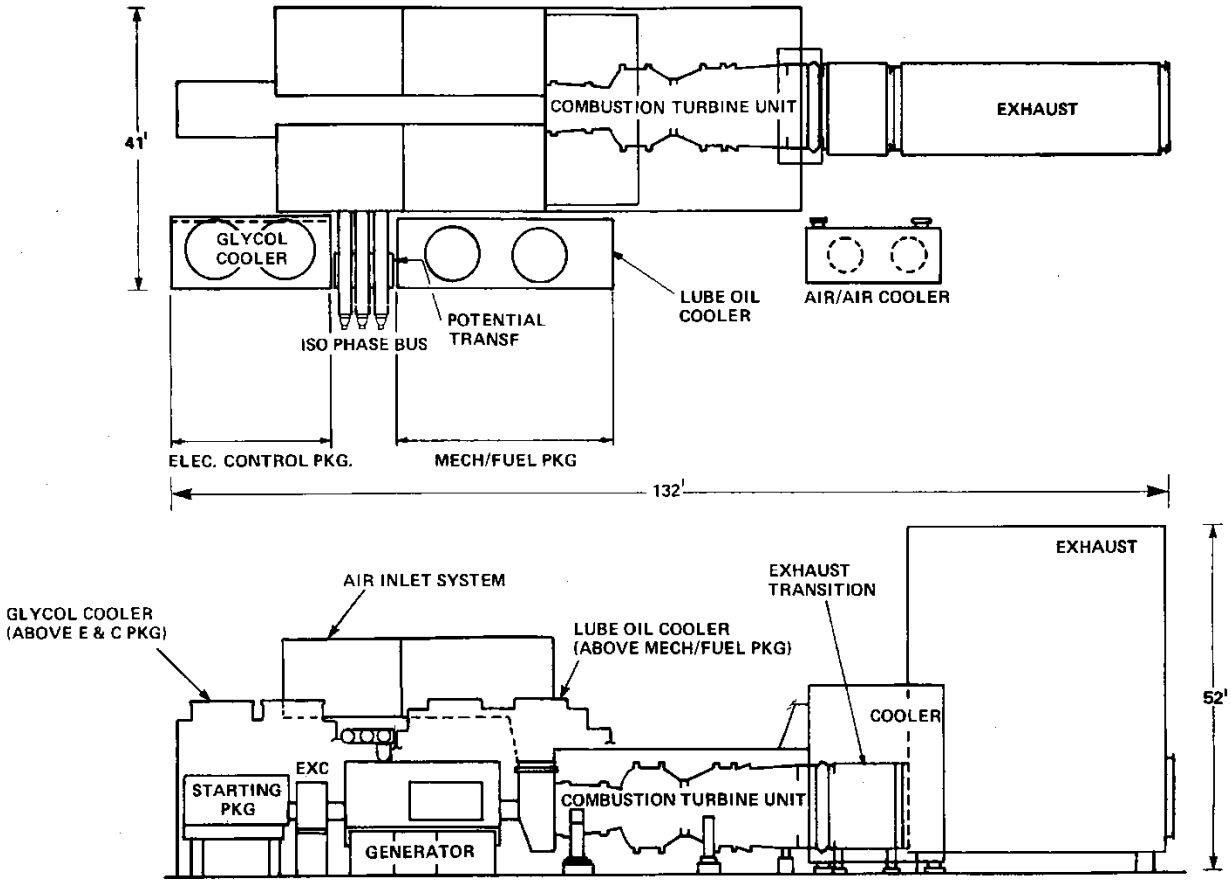

Figure 1: Top and Side-View of W-501 ECONO-PAC Power Plant Arrangement

Figure 2. Cross Section Drawing of Gas Turbine

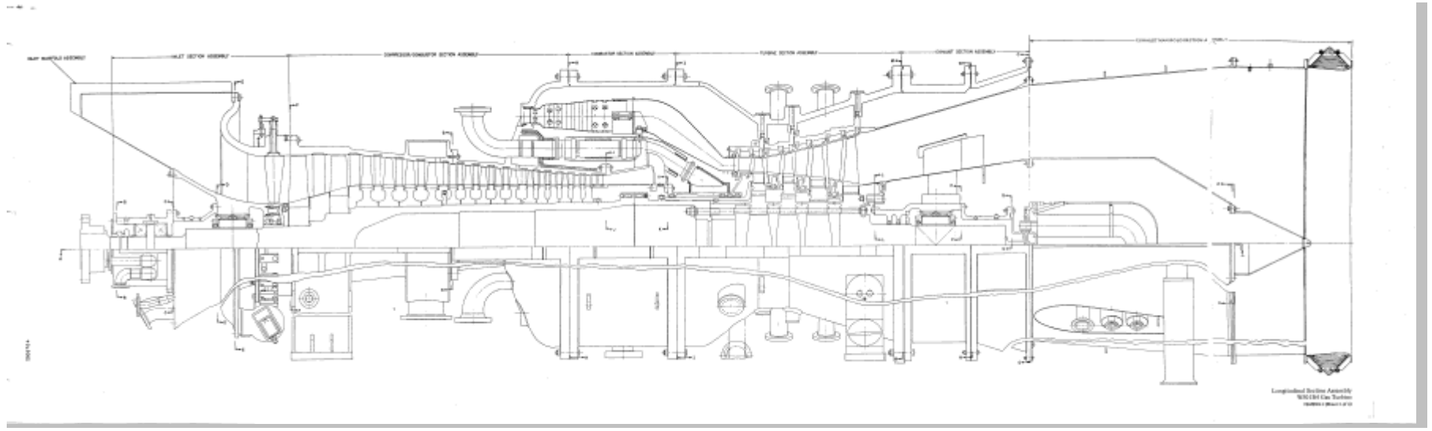

Figure 3. Cross Section Drawing of Fuel Nozzle

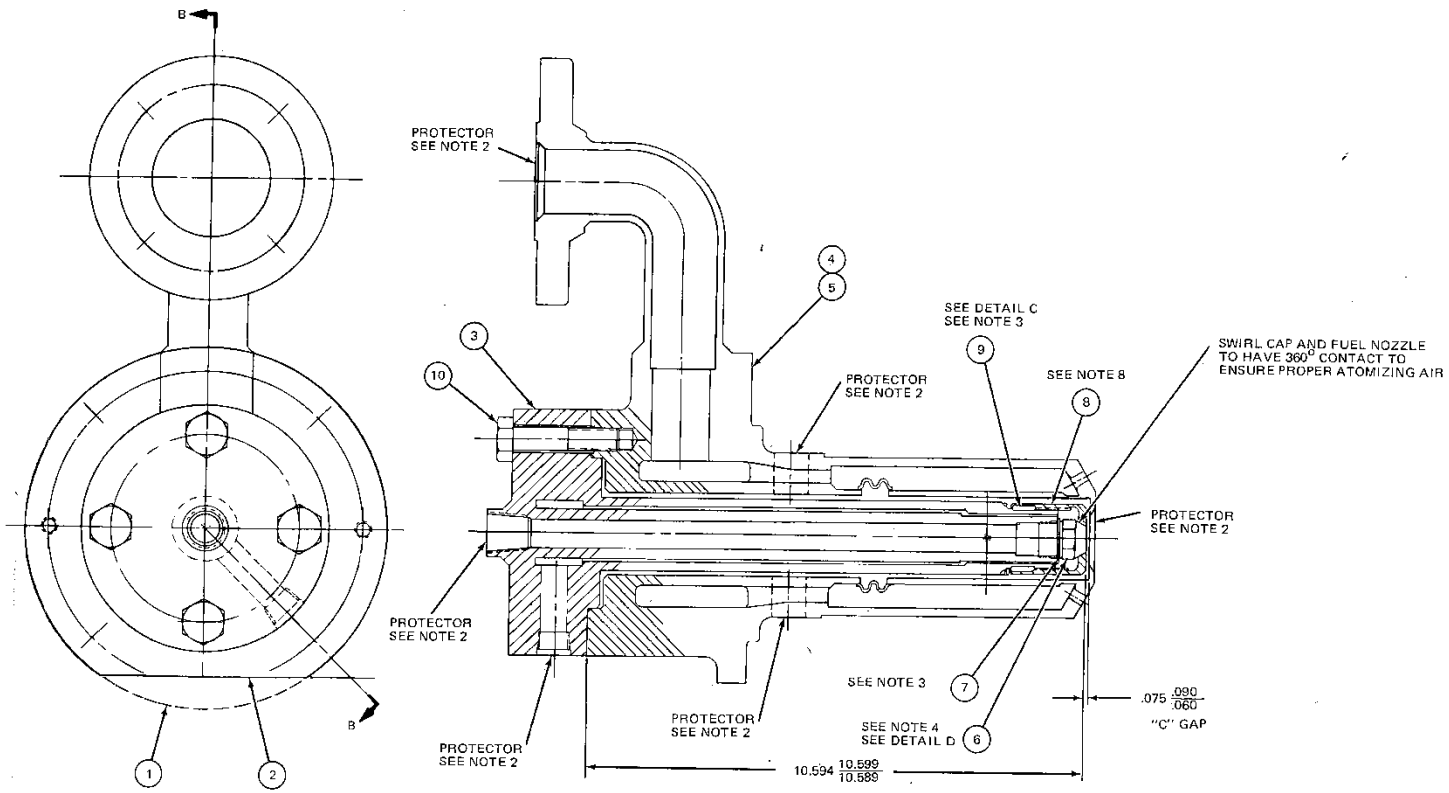

PARTS IDENTI
DUAL FUE

ITEM NO.	TITI
1	Nozzle Assembly - Round Flange
2	Nozzle Assembly - Flat Flange
3	Adapter
4	Nozzle - Round Flange
5	Nozzle - Flat Flange
6	Nozzle Tip
7	Washer
8	Swirl Cap
9	Washer
10	Bolt .500 x 2.25 Lg.
11	Housing Assembly - Round Flange
12	Housing Assembly - Flat Flange
13	Swirl Plate
14	Housing - Round Flange
	Housing - Flat Flange
15	Screw .250 x .75 Lg.
16	Screw .375 x 1.25 Lg.
17	Screw .500 x 2.00 Lg.
18	Gasket

COMPOUND SPEC 53701 NJ ON ALL THD.
N PLACE ANY TIME A PORT IS EXPOSED.
0T0501001 & 20T0502001 BEFORE EACH ASSY.
E TIP T01200 IN/LBS TORQUE
NSPECTION OR MAINTENANCE, REASSEMBLE INTERNAL
MENT USING BOWED RETAINING RING.
TATED IN INCREMENTS OF 90 DEGREES TO ACHIEVE BEST
ZING AIR CONNECTION.
HECKED BEFORE NOZZLE ASSEMBLY IS INSTALLED INTO

:N SWIRL CAP SHOULD TIGHTEN WASHER.
'O 400 IN/LBS TORQUE MAXIMUM.

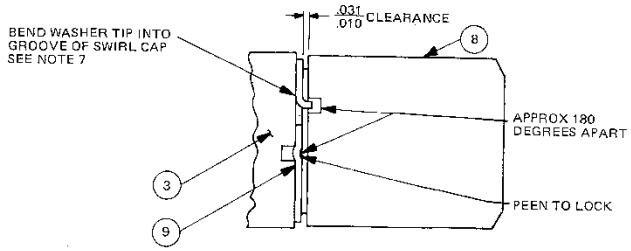

DETAIL C

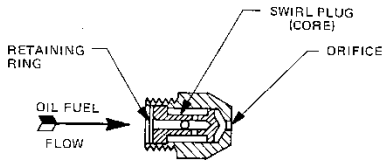

DETAIL D

Water Injection Pump

This is a high-speed centrifugal type pump (Model number P25-DNP-60; Pump type P-2500) driven by a 20 HP, 460 VAC, 3-phase, 60 Hz motor with a normal speed of 3550 rpm. The pump design is 23 gpm at 451 psig.

SUNFLO SPECIFICATION SHEET

Preliminary [X] Purchase [ ]

Customer/Purchaser Name: Address:	Quote No.: 216857 By: Cory Wittwer Rev.: 2	File Reference No.: Date: -
Owner/User Name: DXP Location: ,	Service: RO Service Item No.: Replacement for S/N 73140345 Model No.: P25-DNP-60 Serial No.:	Inquiry No.: Quantity: 1 Pump Type: P-2500 Purchase Order No.:

OPERATING CONDITIONS

Liquid: Water			
Flow (Design):	23.0 gpm		
Temp. (Normal):	68.0 °F	Temp. (Max):	68.0 °F
Suct. Pr. (Max):	0.0 psi	Suct. Pr. (Rated):	0.0 psi
Spec. Gravity:	1.0	Vapor Press.:	psi-a
Diff. Press.:	450.8 psi	Diff. Head:	1040.0 feet
Viscosity:	1.0 cp	NPSH Avail.:	0.0 feet
Disch. Press. (g):	450.8 psi		
Corr/Eros:			

RATED PERFORMANCE

NPSH Req'd(Water):	3.121 feet
Number of Stages:	1
RPM (Output):	10050
Efficiency Design:	33.9 %
Power Design:	18.1 HP
Max Power, Rated Imp.:	21.6 HP
Shutoff Head:	1059 feet
Min. Flow:	6.0 gpm
Seal Cavity Press.:	50.0 psi
Buffer/Flush Press. (g):	Not Applicable
Specific Speed:	289 rpm.gpm.feet
Suct. Specific Speed:	21210 rpm.gpm.feet
Flow @ BEP:	26.4 gpm

CONSTRUCTION

Casing Mounting: Close Coupled
Split: Radial — Type: Diffuser
Seal Flush Ports: 1/2" - NPT — Seal Drain Ports: Open Drain Slots (Std)
Impeller Design Type: Open

NOZZLES	SIZE	TYPE	FACING	POSITION
Suction	2"	NPT	Not applicable	End
Discharge	1 1/2"	NPT	Not applicable	Horizontal top

Impeller Dia. Design: 4.8 inch — Max: 4.987 inch
Inducer: Yes — Diff. Dia.: 0.25 inch
Mechanical Seal: Single — Flush Plan: None
Gearbox Seal: Labrynth
Base Plate: None
Coupling: NA — Guard: None
High Speed Bearing Type: Ball Bearing — Lubr: Oil Splash
Painting: Gearbox Powder Coat

AUXILIARIES

Lube Oil Heat Exchanger: Water cooled
Shell & Tube
Material: NA — Size: NA
Water Cooling Flow: NA gpm

Seal Flush Heat Exchanger: None
Material: Not Applicable — Size: None
Water Cooling Flow: None gpm
Seal Flush Flow: NA

By-pass Orifice: None
Flow: gpm

Discharge Orifice: No
Diameter: 0.0 inch

Auxiliary Piping Required? No
By Sundyne? No
Auxiliary Lube Pump Required? No

MATERIALS

Pump Casing: 316 Stainless Steel — Seal Housing: 316 Stainless Steel
Impeller: 316 Stainless Steel — Inducer: 316 Stainless Steel
HS Shaft: 4140 Steel — Input Shaft: 4140 Steel
Pinion Gear: 8620H Steel — Drive Gear: 8620H Steel
Gearbox Housing: Aluminum
Shaft Sleeve: 316 Stainless Steel — O-Rings: UC - Fluorocarbon
Seal Stationary Face: Standard - Carbon with Resin Binder (RA) — Seal Rot. Face: RJ - Tungsten Carbide w/ Nickel Binder (std)

TEST REQUIREMENTS

Shop Test	Required	Witnessed	Certified
Performance	Yes	No	No
NPSH	No	No	No
Hydro (Case)	No	No	No

Other:
Hydrostatic Test Press. (g): 2160.0 psi
Max Case Working Press. (g): 1440.0 psi
@ 60 °F

MOTOR DRIVE

By Sundyne? YES

Power: 20 HP — Service Factor: 1.15
RPM: 3550 — Frame: 256TDZ
Manufacturer: Baldor
Enclosure: TEFC — Insulation: F
Volt/PH.Cyc.: 230-460/3/60 — Efficiency: Premium Efficient
Full Load Amps: 22.5 — Locked Rotor Amps: 165.7
Bearings: Ball — Lubrication: Grease
Area Classification:
Motor Remarks:

WEIGHTS (lbs)

Pump Unit:	55 lbs
Driver:	350 lbs
Baseplate:	0 lbs
Packing:	80 lbs
Total:	485 lbs

REMARKS

Note: Shaft and Gear material to be as specified or equivalent

14845 West 64th Avenue | Arvada, Colorado 80007 USA | Phone: 1.303.425.0800 | Fax: 1.303.425.0896

SUNFLO PUMP-PREDICTED PERFORMANCE DATA **Units: US Customary** **Date: June 18, 2021**

Customer:		**Specific Gravity:**	**1.0**		**Rated Point**
Pump Model:	**P25-DNP-60**	**Temperature (°F)**	**68.0**	**Flow (gpm)**	**23.0**
Quote Number:	**216857-2**	**Kinetic Visc. (cp)**	**1.0**	**Head (feet)**	**1040.0**
By:	**Cory Wittwer**				

14845 West 64th Avenue | Arvada, Colorado 80007 USA | Phone: 1.303.425.0800 | Fax: 1.303.425.0896

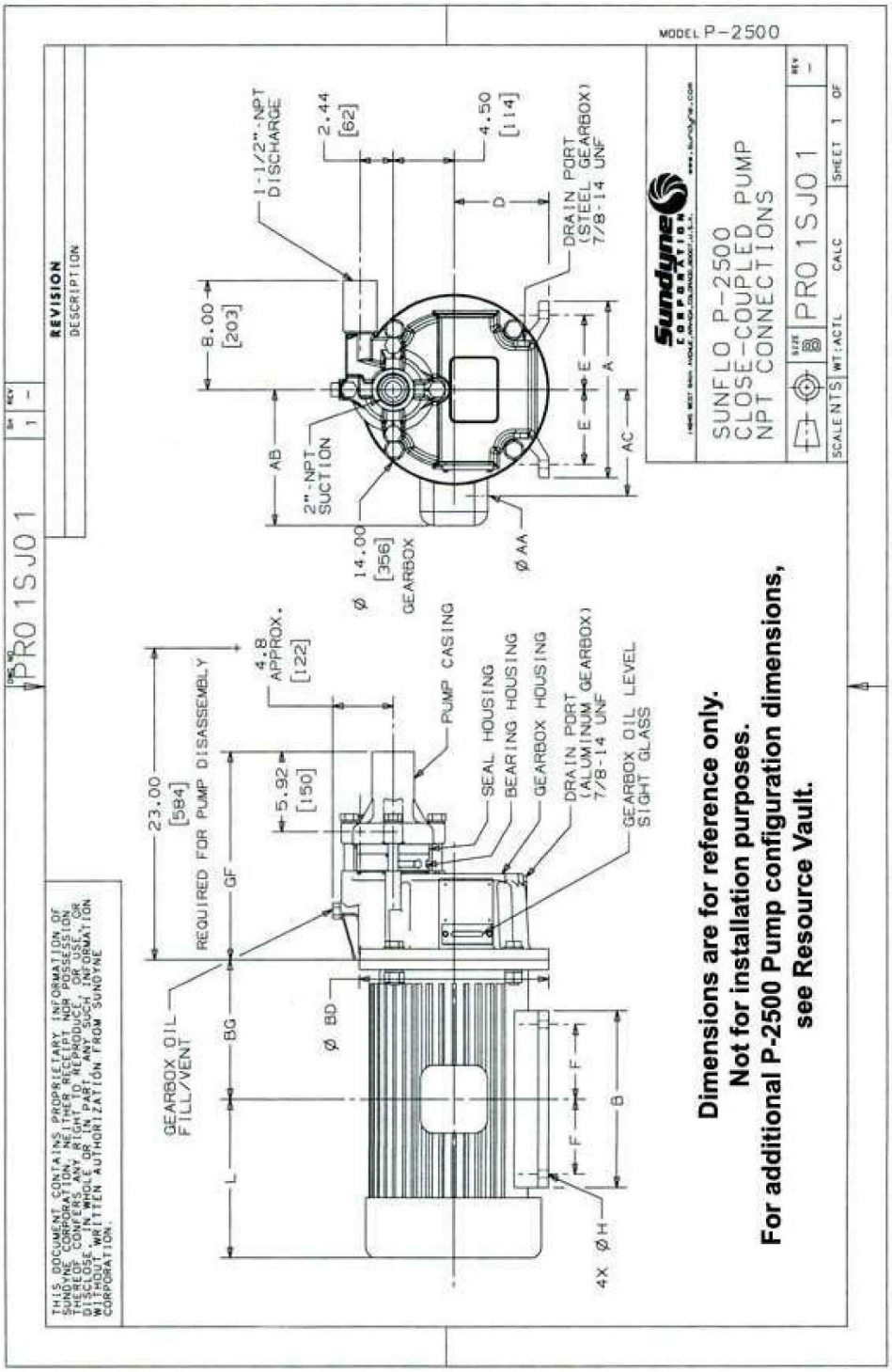

Dimensions are for reference only.
Not for installation purposes.
For additional P-2500 Pump configuration dimensions, see Resource Vault.

14845 West 64th Avenue | Arvada, Colorado 80007 USA | Phone: 1.303.425.0800 | Fax: 1.303.425.0896

Section 11

Source Determination

Source submitting under 20.2.70, 20.2.72, 20.2.73, and 20.2.74 NMAC

Sources applying for a construction permit, PSD permit, or operating permit shall evaluate surrounding and/or associated sources (including those sources directly connected to this source for business reasons) and complete this section. Responses to the following questions shall be consistent with the Air Quality Bureau's permitting guidance, Single Source Determination Guidance, which may be found on the Applications Page in the Permitting Section of the Air Quality Bureau website.

Typically, buildings, structures, installations, or facilities that have the same SIC code, that are under common ownership or control, and that are contiguous or adjacent constitute a single stationary source for 20.2.70, 20.2.72, 20.2.73, and 20.2.74 NMAC applicability purposes. Submission of your analysis of these factors in support of the responses below is optional, unless requested by NMED.

A. Identify the emission sources evaluated in this section (list and describe)**:**

B. Apply the 3 criteria for determining a single source:

SIC Code: Surrounding or associated sources belong to the same 2-digit industrial grouping (2-digit SIC code) as this facility, OR surrounding or associated sources that belong to different 2-digit SIC codes are support facilities for this source.

☒ **Yes** ☐ **No**

Common Ownership or Control: Surrounding or associated sources are under common ownership or control as this source.

☒ **Yes** ☐ **No**

Contiguous or Adjacent: Surrounding or associated sources are contiguous or adjacent with this source.

☒ **Yes** ☐ **No**

C. Make a determination:

☒ The source, as described in this application, constitutes the entire source for 20.2.70, 20.2.72, 20.2.73, or 20.2.74 NMAC applicability purposes. If in "A" above you evaluated only the source that is the subject of this application, all "**YES**" boxes should be checked. If in "A" above you evaluated other sources as well, you must check **AT LEAST ONE** of the boxes "**NO**" to conclude that the source, as described in the application, is the entire source for 20.2.70, 20.2.72, 20.2.73, and 20.2.74 NMAC applicability purposes.

☐ The source, as described in this application, **does not** constitute the entire source for 20.2.70, 20.2.72, 20.2.73, or 20.2.74 NMAC applicability purposes (A permit may be issued for a portion of a source). The entire source consists of the following facilities or emissions sources (list and describe):

This page left intentionally blank

Section 12

Section 12.A
PSD Applicability Determination for All Sources

(Submitting under 20.2.72, 20.2.74 NMAC)

A PSD applicability determination for all sources. For sources applying for a significant permit revision, apply the applicable requirements of 20.2.74.AG and 20.2.74.200 NMAC and to determine whether this facility is a major or minor PSD source, and whether this modification is a major or a minor PSD modification. It may be helpful to refer to the procedures for Determining the Net Emissions Change at a Source as specified by Table A-5 (Page A.45) of the EPA New Source Review Workshop Manual to determine if the revision is subject to PSD review.

A. This facility is:

- ☐ **a minor PSD source before and after this modification (if so, delete C and D below).**
- ☐ **a major PSD source before this modification. This modification will make this a PSD minor source.**
- ☐ **an existing PSD Major Source that has never had a major modification requiring a BACT analysis.**
- ☒ **an existing PSD Major Source that has had a major modification requiring a BACT analysis**
- ☐ **a new PSD Major Source after this modification.**

B. **This facility is one of the listed 20.2.74.501 Table I – PSD Source Categories. The "project" emissions** for this modification are **not significant because there are no changes. The "project" emissions listed below do only result from changes described in this permit application, thus no emissions from other [revisions or modifications, past or future] to this facility. Also, specifically discuss whether this project results in "de-bottlenecking", or other associated emissions resulting in higher emissions. The project emissions (before netting) for this project are as follows [see Table 2 in 20.2.74.502 NMAC for a complete list of significance levels]:**

a. **NOx: 0 TPY**
b. **CO: 0 TPY**
c. **VOC: 0 TPY**
d. **SOx: 0 TPY**
e. **PM: 0 TPY**
f. **PM10: 0 TPY**
g. **PM2.5: 0 TPY**
h. **Fluorides: 0 TPY**
i. **Lead: 0 TPY**
j. **Sulfur compounds (listed in Table 2): 0 TPY**
k. **GHG: 0 TPY**

C. **Netting** is not required (project is not significant). Title V Renewal Application

D. **BACT** is not required (Title V Renewal Application)

E. If this is an existing PSD major source, or any facility with emissions greater than 250 TPY (or 100 TPY for 20.2.74.501 Table 1 – PSD Source Categories), determine whether any permit modifications are related, or could be considered a single project with this action, and provide an explanation for your determination whether a PSD modification is triggered.

This is a Title V permit renewal application. Does not apply.

This page left intentionally blank

Section 13

Determination of State & Federal Air Quality Regulations

This section lists each state and federal air quality regulation that may apply to your facility and/or equipment that are stationary sources of regulated air pollutants.

Not all state and federal air quality regulations are included in this list. Go to the Code of Federal Regulations (CFR) or to the Air Quality Bureau's regulation page to see the full set of air quality regulations.

Required Information for Specific Equipment:
For regulations that apply to specific source types, in the 'Justification' column **provide any information needed to determine if the regulation does or does not apply**. **For example**, to determine if emissions standards at 40 CFR 60, Subpart IIII apply to your three identical stationary engines, we need to know the construction date as defined in that regulation; the manufacturer date; the date of reconstruction or modification, if any; if they are or are not fire pump engines; if they are or are not emergency engines as defined in that regulation; their site ratings; and the cylinder displacement.

Required Information for Regulations that Apply to the Entire Facility:
See instructions in the 'Justification' column for the information that is needed to determine if an 'Entire Facility' type of regulation applies (e.g. 20.2.70 or 20.2.73 NMAC).

Regulatory Citations for Regulations That Do Not, but Could Apply:
If there is a state or federal air quality regulation that does not apply, but you have a piece of equipment in a source category for which a regulation has been promulgated, you must **provide the low level regulatory citation showing why your piece of equipment is not subject to or exempt from the regulation. For example** if you have a stationary internal combustion engine that is not subject to 40 CFR 63, Subpart ZZZZ because it is an existing 2 stroke lean burn stationary RICE with a site rating of more than 500 brake HP located at a major source of HAP emissions, your citation would be 40 CFR 63.6590(b)(3)(i). **We don't want a discussion of every non-applicable regulation, but if it is possible a regulation could apply, explain why it does not. For example,** if your facility is a power plant, you do not need to include a citation to show that 40 CFR 60, Subpart OOO does not apply to your non-existent rock crusher.

Regulatory Citations for Emission Standards:
For each unit that is subject to an emission standard in a source specific regulation, such as 40 CFR 60, Subpart OOO or 40 CFR 63, Subpart HH, include the low level regulatory citation of that emission standard. Emission standards can be numerical emission limits, work practice standards, or other requirements such as maintenance. **Here are examples:** a glycol dehydrator is subject to the general standards at 63.764C(1)(i) through (iii); an engine is subject to 63.6601, Tables 2a and 2b; a crusher is subject to 60.672(b), Table 3 and all transfer points are subject to 60.672(e)(1)

Federally Enforceable Conditions:
All federal regulations are federally enforceable. All Air Quality Bureau State regulations are federally enforceable except for the following: affirmative defense portions at 20.2.7.6.B, 20.2.7.110(B)(15), 20.2.7.11 through 20.2.7.113, 20.2.7.115, and 20.2.7.116; 20.2.37; 20.2.42; 20.2.43; 20.2.62; 20.2.63; 20.2.86; 20.2.89; and 20.2.90 NMAC. Federally enforceable means that EPA can enforce the regulation as well as the Air Quality Bureau and federally enforceable regulations can count toward determining a facility's potential to emit (PTE) for the Title V, PSD, and nonattainment permit regulations.

INCLUDE ANY OTHER INFORMATION NEEDED TO COMPLETE AN APPLICABILITY DETERMINATION OR THAT IS RELEVENT TO YOUR FACILITY'S NOTICE OF INTENT OR PERMIT.

EPA Applicability Determination Index for 40 CFR 60, 61, 63, etc: http://cfpub.epa.gov/adi/

To save paper and to standardize the application format, delete this sentence, and begin your submittal for this attachment on this page.

Example of a Table for STATE REGULATIONS:

STATE REGU-LATIONS CITATION	Title	Applies? Enter Yes or No	Unit(s) or Facility	JUSTIFICATION: (You may delete instructions or statements that do not apply in the justification column to shorten the document.)
20.2.1 NMAC	General Provisions	Yes	Facility	General Provisions apply to Notice of Intent, Construction, and Title V permit applications.
20.2.3 NMAC	Ambient Air Quality Standards NMAAQS	Yes	Facility	20.2.3 NMAC is a State Implementation Plan (SIP) approved regulation that limits the maximum allowable concentration of, Sulfur Compounds, Carbon Monoxide and Nitrogen Dioxide. Title V applications, see exemption at 20.2.3.9 NMAC
20.2.7 NMAC	Excess Emissions	Yes	Facility	All Title V major sources are subject to Air Quality Control Regulations, as defined in 20.2.7 NMAC, and are thus subject to the requirements of this regulation. Also listed as applicable in NSR Permit 0747.
20.2.23 NMAC	Fugitive Dust Control	No	Facility	Does not apply to Maddox Station
20.2.33 NMAC	Gas Burning Equipment - Nitrogen Dioxide	Yes	S1	**Applies to Unit S1**
20.2.34 NMAC	Oil Burning Equipment: NO_2	No		**Does not apply.**
20.2.35 NMAC	Natural Gas Processing Plant – Sulfur	No		Does not apply
20.2.37 and 20.2.36 NMAC	Petroleum Processing Facilities and Petroleum Refineries	N/A	N/A	**These regulations were repealed by the Environmental Improvement Board. If you had equipment subject to 20.2.37 NMAC before the repeal, your combustion emission sources are now subject to 20.2.61 NMAC.**
20.2.38 NMAC	Hydrocarbon Storage Facility	No		Does not apply
20.2.39 NMAC	Sulfur Recovery Plant - Sulfur	No		Does not apply
20.2.61.109 NMAC	Smoke & Visible Emissions	Yes	S1, S2, S3, SP, EGR-2, EFP	Engines and heaters are Stationary Combustion Equipment. Specify units subject to this regulation.
20.2.70 NMAC	Operating Permits	Yes	Facility	Source is major for NOx, CO, VOCs.
20.2.71 NMAC	Operating Permit Fees	Yes	Facility	Yes, this facility is subject to 20.2.70 NMAC and is in turn subject to 20.2.71 NMAC.
20.2.72 NMAC	Construction Permits	Yes	Facility	This facility is subject to 20.2.72 NMAC and NSR Permit number: 747-M1R1
20.2.73 NMAC	NOI & Emissions Inventory Requirements	Yes	Facility	**NOI:** 20.2.73.200 NMAC applies (requiring a NOI application) **Emissions Inventory Reporting:** 20.2.73.300 NMAC applies. All Title V major sources meet the applicability requirements of 20.2.73.300 NMAC.
20.2.74 NMAC	Permits – Prevention of Significant Deterioration (PSD)	No	Facility	Does not apply. Facility is not a PSD facility.

STATE REGU-LATIONS CITATION	Title	Applies? Enter Yes or No	Unit(s) or Facility	JUSTIFICATION: (You may delete instructions or statements that do not apply in the justification column to shorten the document.)
20.2.75 NMAC	Construction Permit Fees	Yes	Facility	Facility is not subject to the 75.11.E annual fees since it is subject to 20.2.71 NMAC.
20.2.77 NMAC	New Source Performance	Yes	EGR-2	This is a stationary source which is subject to the requirements of 40 CFR Part 60 Subpart IIII.
20.2.78 NMAC	Emission Standards for HAPS	No		No units that are subject to 40 CFR 61.
20.2.79 NMAC	Permits – Nonattainment Areas	No	Facility	Does not apply.
20.2.80 NMAC	Stack Heights	No		Usually not applicable for TV
20.2.82 NMAC	MACT Standards for source categories of HAPS	Yes	EGR-2, EFP, SP	These three engines are subject to 40 CFR 63 Subpart ZZZZ

Example of a Table for Applicable FEDERAL REGULATIONS (Note: This is not an exhaustive list):

FEDERAL REGU-LATIONS CITATION	Title	Applies? Enter Yes or No	Unit(s) or Facility	JUSTIFICATION:
40 CFR 50	NAAQS	Yes	Facility	If subject, this would normally apply to the entire facility. This applies if you are subject to 20.2.70, 20.2.72, 20.2.74, and/or 20.2.79 NMAC.
NSPS 40 CFR 60, Subpart A	General Provisions	Yes	EGR-2	Subpart JJJJ applies to this unit.
NSPS 40 CFR60.40a, Subpart Da	Subpart Da, Performance Standards for **Electric Utility Steam Generating Units**	No		Does not apply. Construction commenced prior to the 9/17/1978 applicability date.
NSPS 40 CFR60.40b Subpart Db	Electric Utility Steam Generating Units	No		Does not apply. Construction commenced prior to the 6/19/1984 applicability date.
40 CFR 60.40c, Subpart Dc	Standards of Performance for Small Industrial-Commercial-Institutional Steam Generating Units	No		Does not apply. Construction commenced prior to the 6/9/1989 applicability date.

FEDERAL REGU-LATIONS CITATION	Title	Applies? Enter Yes or No	Unit(s) or Facility	JUSTIFICATION:
NSPS 40 CFR 60, Subpart Ka	Standards of Performance for Storage Vessels for Petroleum Liquids for which Construction, Reconstruction, or Modification Commenced After May 18, 1978, and Prior to July 23, 1984	No		No tanks have a storage capacity greater than 151,416 liters (40,000 gallons) that are used to store petroleum liquids for which construction commenced after May 18, 1978.
NSPS 40 CFR 60, Subpart Kb	Standards of Performance for Volatile Organic Liquid Storage Vessels (Including Petroleum Liquid Storage Vessels) for Which Construction, Reconstruction, or Modification Commenced After July 23, 1984	No		No storage vessels with a capacity greater than or equal to 75 cubic meters (m^3) that is used to store volatile organic liquids (VOL) for which construction, reconstruction, or modification commenced after July 23, 1984.
NSPS 40 CFR 60.330 Subpart GG	Stationary Gas Turbines	No		Unit S2 has a heat input = 1,134 MMBtu/hour which is greater than the 10 MMBtu/hour threshold. These units were installed on August 4, 1975 which is before the October 3, 1977 applicability date. (For information on equipment manufactured before but installed at facility after see EPA Guidance document # 0300006)
NSPS 40 CFR 60, Subpart KKK	Leaks of VOC from Onshore Gas Plants	No		Does not apply. The facility is not an onshore gas plant
NSPS 40 CFR Part 60 Subpart LLL	Standards of Performance for Onshore Natural Gas Processing: SO_2 Emissions	No		Does not apply. The facility is not a natural gas processing plant
NSPS 40 CFR Part 60 Subpart OOOO	Standards of Performance for Crude Oil and Natural Gas Production, Transmission, and Distribution for which construction, modification or reconstruction commenced after August 23, 2011 and before September 18, 2015	No		Does not apply
NSPS 40 CFR Part 60 Subpart OOOOa	Standards of Performance for Crude Oil and Natural Gas Facilities for	No		Does not apply

FEDERAL REGU-LATIONS CITATION	Title	Applies? Enter Yes or No	Unit(s) or Facility	JUSTIFICATION:
	which Construction, Modification or Reconstruction Commenced After September 18, 2015			
NSPS 40 CFR 60 Subpart IIII	Standards of performance for Stationary Compression Ignition Internal Combustion Engines	Yes	EGR-2	Engine is an emergency generator.
NSPS 40 CFR Part 60 Subpart JJJJ	Standards of Performance for Stationary Spark Ignition Internal Combustion Engines	No		Does not apply. No spark ignited engines on site.
NSPS 40 CFR 60 Subpart TTTT	Standards of Performance for Greenhouse Gas Emissions for Electric Generating Units	No		Does not apply. All units were manufactured prior to January 8, 2014.
NSPS 40 CFR 60 Subpart UUUU	Emissions Guidelines for Greenhouse Gas Emissions and Compliance Times for Electric Utility Generating Units	No		Does not apply. Xcel Energy is not a state.
NSPS 40 CFR 60, Subparts WWW, XXX, Cc, and Cf	Standards of performance for Municipal Solid Waste (MSW) Landfills	No		Does not apply. No MSW located on site.
NESHAP 40 CFR 61 Subpart A	General Provisions	No		No 40 CFR 61 sources on site.
NESHAP 40 CFR 61 Subpart E	National Emission Standards for Mercury	No		Does not apply.
NESHAP 40 CFR 61 Subpart V	National Emission Standards for Equipment Leaks (Fugitive Emission Sources)	No		Does not apply.
MACT 40 CFR 63, Subpart A	General Provisions	Yes	EGR-2, EFP, SP	These three engines are subject to 40 CFR 63 Subpart ZZZZ

FEDERAL REGU-LATIONS CITATION	Title	Applies? Enter Yes or No	Unit(s) or Facility	JUSTIFICATION:
MACT 40 CFR 63.760 Subpart HH	Oil and Natural Gas Production Facilities	No		Does not apply. Facility is not an oil and gas production facility
MACT 40 CFR 63 Subpart HHH		No		Does not apply. Facility is not a natural gas transmission and storage facilities that transport or store natural gas prior to entering the pipeline to a local distribution company or to a final end user.
MACT 40 CFR 63 Subpart DDDDD	National Emission Standards for Hazardous Air Pollutants for Major Industrial, Commercial, and Institutional Boilers & Process Heaters	No		Does not apply. Unit S1 is a natural gas-fired EGU as defined in subpart UUUUU of 40 CFR 63 firing at least 85 percent natural gas on an annual heat input basis. (40 cfr 63.7491(a))
MACT 40 CFR 63 Subpart UUUUU	National Emission Standards for Hazardous Air Pollutants Coal & Oil Fire Electric Utility Steam Generating Unit	No		Does not apply. Unit S1 is not coal or oil fired.
MACT 40 CFR 63 Subpart ZZZZ	National Emissions Standards for Hazardous Air Pollutants for Stationary Reciprocating Internal Combustion Engines (**RICE MACT**)	Yes	EGR-2, EFP, SP	These three engines are subject to 40 CFR 63 Subpart ZZZZ. All engines meet the limited use requirements of emergency engines.
40 CFR 64	**Compliance Assurance Monitoring**	Yes	S2	**Applies only to Title V Major Sources** Emissions for Unit S2 are major in and of itself (736 TPY NOX). Compliance Assurance Monitoring (CAM) Plan is already included in the permit. Monitoring is performed as required.
40 CFR 68	**Chemical Accident Prevention**	No		The facility does not have more than a threshold quantity of a regulated substance in a process, as determined under §68.115.
Title IV – Acid Rain 40 CFR 72	**Acid Rain**	Yes	S1	Applies to Maddox Unit 1. Units 2 and 3 are gas turbines built before the deadline for applicability.
Title IV – Acid Rain 40 CFR 73	**Sulfur Dioxide** Allowance Emissions	Yes	S1	Applies to Maddox Unit 1. The facility maintains sufficient allowances, according to the requirements of Title IV of the Clean Air Act, for all sulfur dioxide emissions.
Title IV-Acid Rain 40 CFR 75	**Continuous Emissions Monitoring**	Yes	S1	Unit S1 generates commercial electric power or electric power for sale and is required to install, operate, and maintain a continuous emission monitoring system.

FEDERAL REGU-LATIONS CITATION	Title	Applies? Enter Yes or No	Unit(s) or Facility	JUSTIFICATION:
Title IV – Acid Rain 40 CFR 76	**Acid Rain** Nitrogen Oxides **Emission Reduction Program**	No		Does not apply. There are no coal boilers at the facility.
Title VI – 40 CFR 82	Protection of **Stratospheric Ozone**	Yes	Facility	Applies to entire facility. This facility services air conditioning and refrigeration appliances incidental to employee comfort and climate control for equipment.

This page left intentionally blank

Section 14

Operational Plan to Mitigate Emissions

(Submitting under 20.2.70, 20.2.72, 20.2.74 NMAC)

☒ **Title V Sources** (20.2.70 NMAC)**:** By checking this box and certifying this application the permittee certifies that it has developed an **Operational Plan to Mitigate Emissions During Startups, Shutdowns, and Emergencies** defining the measures to be taken to mitigate source emissions during startups, shutdowns, and emergencies as required by 20.2.70.300.D.5(f) and (g) NMAC. This plan shall be kept on site to be made available to the Department upon request. This plan should not be submitted with this application.

☐ **NSR** (20.2.72 NMAC)**, PSD** (20.2.74 NMAC) **& Nonattainment** (20.2.79 NMAC) **Sources:** By checking this box and certifying this application the permittee certifies that it has developed an **Operational Plan to Mitigate Source Emissions During Malfunction, Startup, or Shutdown** defining the measures to be taken to mitigate source emissions during malfunction, startup, or shutdown as required by 20.2.72.203.A.5 NMAC. This plan shall be kept on site to be made available to the Department upon request. This plan should not be submitted with this application.

☒ **Title V** (20.2.70 NMAC)**, NSR** (20.2.72 NMAC)**, PSD** (20.2.74 NMAC) **& Nonattainment** (20.2.79 NMAC) **Sources:** By checking this box and certifying this application the permittee certifies that it has established and implemented a Plan to Minimize Emissions During Routine or Predictable Startup, Shutdown, and Scheduled Maintenance through work practice standards and good air pollution control practices as required by 20.2.7.14.A and B NMAC. This plan shall be kept on site or at the nearest field office to be made available to the Department upon request. This plan should not be submitted with this application.

Appropriate Responses Marked above. This application is for the renewal of a Title V permit. Therefore, responses for Title V permits are indicated.

This information is included the facility's Startup Shutdown Operational and Emission Minimization Plan, which includes sections on minimizing emissions during both normal operations, startups and shutdowns, and during periods of malfunction for both the boilers and the gas turbines

This page left intentionally blank

Section 15

Alternative Operating Scenarios

(Submitting under 20.2.70, 20.2.72, 20.2.74 NMAC)

Alternative Operating Scenarios: Provide all information required by the department to define alternative operating scenarios. This includes process, material and product changes; facility emissions information; air pollution control equipment requirements; any applicable requirements; monitoring, recordkeeping, and reporting requirements; and compliance certification requirements. Please ensure applicable Tables in this application are clearly marked to show alternative operating scenario.

Construction Scenarios: When a permit is modified authorizing new construction to an existing facility, NMED includes a condition to clearly address which permit condition(s) (from the previous permit and the new permit) govern during the interval between the date of issuance of the modification permit and the completion of construction of the modification(s). There are many possible variables that need to be addressed such as: Is simultaneous operation of the old and new units permitted and, if so for example, for how long and under what restraints? In general, these types of requirements will be addressed in Section A100 of the permit, but additional requirements may be added elsewhere. Look in A100 of our NSR and/or TV permit template for sample language dealing with these requirements. Find these permit templates at: https://www.env.nm.gov/aqb/permit/aqb_pol.html. Compliance with standards must be maintained during construction, which should not usually be a problem unless simultaneous operation of old and new equipment is requested.

In this section, under the bolded title "Construction Scenarios", specify any information necessary to write these conditions, such as: conservative-realistic estimated time for completion of construction of the various units, whether simultaneous operation of old and new units is being requested (and, if so, modeled), whether the old units will be removed or decommissioned, any PSD ramifications, any temporary limits requested during phased construction, whether any increase in emissions is being requested as SSM emissions or will instead be handled as a separate Construction Scenario (with corresponding emission limits and conditions, etc.

No alternative operating scenarios.

This page left intentionally blank

Section 16

Air Dispersion Modeling

1) Minor Source Construction (20.2.72 NMAC) and Prevention of Significant Deterioration (PSD) (20.2.74 NMAC) ambient impact analysis (modeling): Provide an ambient impact analysis as required at 20.2.72.203.A(4) and/or 20.2.74.303 NMAC and as outlined in the Air Quality Bureau's Dispersion Modeling Guidelines found on the Planning Section's modeling website. If air dispersion modeling has been waived for one or more pollutants, attach the AQB Modeling Section modeling waiver approval documentation.
2) SSM Modeling: Applicants must conduct dispersion modeling for the total short term emissions during routine or predictable startup, shutdown, or maintenance (SSM) using realistic worst case scenarios following guidance from the Air Quality Bureau's dispersion modeling section. Refer to "Guidance for Submittal of Startup, Shutdown, Maintenance Emissions in Permit Applications (http://www.env.nm.gov/aqb/permit/app_form.html) for more detailed instructions on SSM emissions modeling requirements.
3) Title V (20.2.70 NMAC) ambient impact analysis: Title V applications must specify the construction permit and/or Title V Permit number(s) for which air quality dispersion modeling was last approved. Facilities that have only a Title V permit, such as landfills and air curtain incinerators, are subject to the same modeling required for preconstruction permits required by 20.2.72 and 20.2.74 NMAC.

What is the purpose of this application?	Enter an X for each purpose that applies
New PSD major source or PSD major modification (20.2.74 NMAC). See #1 above.	
New Minor Source or significant permit revision under 20.2.72 NMAC (20.2.72.219.D NMAC). See #1 above. **Note:** Neither modeling nor a modeling waiver is required for VOC emissions.	
Reporting existing pollutants that were not previously reported.	
Reporting existing pollutants where the ambient impact is being addressed for the first time.	
Title V application (new, renewal, significant, or minor modification. 20.2.70 NMAC). See #3 above.	Permit 0747
Relocation (20.2.72.202.B.4 or 72.202.D.3.c NMAC)	
Minor Source Technical Permit Revision 20.2.72.219.B.1.d.vi NMAC for like-kind unit replacements.	
Other: i.e. SSM modeling. See #2 above.	
This application does not require modeling since this is a No Permit Required (NPR) application.	
This application does not require modeling since this is a Notice of Intent (NOI) application (20.2.73 NMAC).	
This application does not require modeling according to 20.2.70.7.E(11), 20.2.72.203.A(4), 20.2.74.303, 20.2.79.109.D NMAC and in accordance with the Air Quality Bureau's Modeling Guidelines.	

Check each box that applies:

☐ See attached, approved modeling **waiver for all** pollutants from the facility.
☐ See attached, approved modeling **waiver for some** pollutants from the facility.
☐ Attached in Universal Application Form 4 (UA4) is a **modeling report for all** pollutants from the facility.
☐ Attached in UA4 is a **modeling report for some** pollutants from the facility.
☒ No modeling is required.

This page left intentionally blank

Section 17

Compliance Test History

(Submitting under 20.2.70, 20.2.72, 20.2.74 NMAC)

To show compliance with existing NSR permits conditions, you must submit a compliance test history. The table below provides an example.

Compliance Test History Table

Unit No.	Test Description	Test Date
S1	Tested in accordance with EPA test methods for CO as required by Title V Permit P008R3M1	10/11/2019; 8/31/2020-9/3/2020; 8/3/2021; 7/28/2022; 5/9/2023; 5/1/2024
S2	Tested in accordance with EPA test methods for NOx and CO as required by Title V permit P008R3, Section A601.C	9/11/2019; 9/31/2020; 9/22/2021; 9/7/2022; 7/11/2023
S3	Tested in accordance with EPA test methods for NOx and CO as required by Title V permit P008R3, Section A601.C	10/16/2018; 7/11/2023

This page left intentionally blank

Section 19

Requirements for Title V Program

Do not print this section unless this is a Title V application.

Who Must Use this Attachment:

* Any major source as defined in 20.2.70 NMAC.
* Any source, including an area source, subject to a standard or other requirement promulgated under Section 111 - Standards of Performance for New Stationary Sources, or Section 112 Hazardous Air Pollutants, of the 1990 federal Clean Air Act ("federal Act"). Non-major sources subject to Sections 111 or 112 of the federal Act are exempt from the obligation to obtain an 20.2.70 NMAC operating permit until such time that the EPA Administrator completes rulemakings that require such sources to obtain operating permits. In addition, sources that would be required to obtain an operating permit solely because they are subject to regulations or requirements under Section 112(r) of the federal Act are exempt from the requirement to obtain an Operating Permit.
* Any Acid Rain source as defined under title IV of the federal Act. The Acid Rain program has additional forms. See http://www.env.nm.gov/aqb/index.html. Sources that are subject to both the Title V and Acid Rain regulations are encouraged to submit both applications simultaneously.
* Any source in a source category designated by the EPA Administrator ("Administrator"), in whole or in part, by regulation, after notice and comment.

19.1 - 40 CFR 64, Compliance Assurance Monitoring (CAM) (20.2.70.300.D.10.e NMAC)

Any source subject to 40CFR, Part 64 (Compliance Assurance Monitoring) must submit all the information required by section 64.7 with the operating permit application. The applicant must prepare a separate section of the application package for this purpose; if the information is already listed elsewhere in the application package, make reference to that location. Facilities not subject to Part 64 are invited to submit periodic monitoring protocols with the application to help the AQB to comply with 20.2.70 NMAC. Sources subject to 40 CFR Part 64, must submit a statement indicating your source's compliance status with any enhanced monitoring and compliance certification requirements of the federal Act.

See Section 10 for a copy of the Compliance Assurance Monitoring Plan for Unit S2.

19.2 - Compliance Status (20.2.70.300.D.10.a & 10.b NMAC)

Describe the facility's compliance status with each applicable requirement at the time this permit application is submitted. This statement should include descriptions of or references to all methods used for determining compliance. This statement should include descriptions of monitoring, recordkeeping and reporting requirements and test methods used to determine compliance with all applicable requirements. Refer to Section 2, Tables 2-N and 2-O of the Application Form as necessary. (20.2.70.300.D.11 NMAC) For facilities with existing Title V permits, refer to most recent Compliance Certification for existing requirements. Address new requirements such as CAM, here, including steps being taken to achieve compliance.

The most recent Title V Compliance Certification was submitted on November 20, 2024. A copy of the certification is attached. No open deviations.

19.3 - Continued Compliance (20.2.70.300.D.10.c NMAC)

Provide a statement that your facility will continue to be in compliance with requirements for which it is in compliance at the time of permit application. This statement must also include a commitment to comply with other applicable requirements as they come into effect during the permit term. This compliance must occur in a timely manner or be consistent with such schedule expressly required by the applicable requirement.

Maddox Station will continue to be in compliance with all applicable requirements. In addition, Maddox Station will comply with any other applicable requirements as they come into effect during the permit term, in accordance with the schedule expressed by the applicable requirement. All deviations from permit requirements or applicable requirements will be reported semi-annually as required and annual compliance certifications will be submitted to meet reporting requirements.

19.4 - Schedule for Submission of Compliance (20.2.70.300.D.10.d NMAC)

You must provide a proposed schedule for submission to the department of compliance certifications during the permit term. This certification must be submitted annually unless the applicable requirement or the department specifies a more frequent period. A sample form for these certifications will be attached to the permit.

Maddox Station will continue to use the schedule of compliance certification submittals as listed in Section A109 of Permit P008R4M1, November 2, 2021. Semi-annual deviation reports will be submitted after May 1 and November 1 each year.

19.5 - Stratospheric Ozone and Climate Protection

In addition to completing the four (4) questions below, you must submit a statement indicating your source's compliance status with requirements of Title VI, Section 608 (National Recycling and Emissions Reduction Program) and Section 609 (Servicing of Motor Vehicle Air Conditioners).

---

1. Does your facility have any air conditioners or refrigeration equipment that uses CFCs, HCFCs or other ozone-depleting substances? ☒ **Yes** ☐ **No**

2. Does any air conditioner(s) or any piece(s) of refrigeration equipment contain a refrigeration charge greater than 50 lbs? ☐ **Yes** ☒ **No**

   (If the answer is yes, describe the type of equipment and how many units are at the facility.)

3. Do your facility personnel maintain, service, repair, or dispose of any motor vehicle air conditioners (MVACs) or appliances ("appliance" and "MVAC" as defined at 82. 152)? ☐ **Yes** ☒ **No**

4. Cite and describe which Title VI requirements are applicable to your facility (i.e. 40 CFR Part 82, Subpart A through G.)

---

40 CFR 82, Subpart A: The Maddox facility does not produce, transform, destroy, import or export a controlled substance, or import or export a controlled product.
40 CFR 82, Subpart B: The Maddox facility does not service motor vehicle air conditioners.
40 CFR 82, Subpart C: The Maddox facility does not sell or distribute banned substances.
40 CFR 82, Subpart D: The Maddox facility is not a Federal facility.
40 CFR 82, Subpart E: The Maddox facility does not manufacture or distribute containers of, and products containing or manufactured with, ozone-depleting substances
40 CFR 82, Subpart F: The Maddox facility is subject to this subpart. Employees who work on the facility's HVAC equipment are licensed as required.
40 CFR 82, Subpart G: The Maddox facility does not manufacture or distribute substitute materials.

19.6 - Compliance Plan and Schedule

Applications for sources, which are not in compliance with all applicable requirements at the time the permit application is submitted to the department, must include a proposed compliance plan as part of the permit application package. This plan shall include the information requested below:

A. Description of Compliance Status: (20.2.70.300.D.11.a NMAC)
A narrative description of your facility's compliance status with respect to all applicable requirements (as defined in 20.2.70 NMAC) at the time this permit application is submitted to the department.

B. Compliance plan: (20.2.70.300.D.11.B NMAC)
A narrative description of the means by which your facility will achieve compliance with applicable requirements with which it is not in compliance at the time you submit your permit application package.

C. Compliance schedule: (20.2.70.300D.11.c NMAC)
A schedule of remedial measures that you plan to take, including an enforceable sequence of actions with milestones, which will lead to compliance with all applicable requirements for your source. This schedule of compliance must be at least as stringent as that contained in any consent decree or administrative order to which your source is subject. The obligations of any consent decree or administrative order are not in any way diminished by the schedule of compliance.

D. Schedule of Certified Progress Reports: (20.2.70.300.D.11.d NMAC)
A proposed schedule for submission to the department of certified progress reports must also be included in the compliance schedule. The proposed schedule must call for these reports to be submitted at least every six (6) months.

E. Acid Rain Sources: (20.2.70.300.D.11.e NMAC)
If your source is an acid rain source as defined by EPA, the following applies to you. For the portion of your acid rain source subject to the acid rain provisions of title IV of the federal Act, the compliance plan must also include any additional requirements under the acid rain provisions of title IV of the federal Act. Some requirements of title IV regarding the schedule and methods the source will use to achieve compliance with the acid rain emissions limitations may supersede the requirements of title V and 20.2.70 NMAC. You will need to consult with the Air Quality Bureau permitting staff concerning how to properly meet this requirement.

NOTE: The Acid Rain program has additional forms. See http://www.env.nm.gov/aqb/index.html. Sources that are subject to both the Title V and Acid Rain regulations are **encouraged** to submit both applications **simultaneously**.

No compliance plan is necessary.

19.7 - 112(r) Risk Management Plan (RMP)

Any major sources subject to section 112(r) of the Clean Air Act must list all substances that cause the source to be subject to section 112(r) in the application. The permittee must state when the RMP was submitted to and approved by EPA.

Not Applicable.

19.8 - Distance to Other States, Bernalillo, Indian Tribes and Pueblos

Will the property on which the facility is proposed to be constructed or operated be closer than 80 km (50 miles) from other states, local pollution control programs, and Indian tribes and pueblos (20.2.70.402.A.2 and 20.2.70.7.B NMAC)?

(If the answer is yes, state which apply and provide the distances.)

Yes. Texas, 22 km.

19.9 - Responsible Official

Provide the Responsible Official as defined in 20.2.70.7.AD NMAC:

David Low, Regional Vice President, Operations

Alternate: Jon Calcote, Director, Cunningham-Maddox Complex

New Mexico Environment Department - Air Quality Bureau
Compliance and Enforcement Section
525 Camino de Los Marquez - Suite 1 - Santa Fe, NM 87505
Phone (505) 476-4300 - Email: nmenv-aqbrr@state.nm.us

Reporting Submittal Form

GENERAL FACILITY AND REPORT INFORMATION

Owner Name: Southwestern Public Service Co dba Xcel Energy	**Facility Name:** Maddox Station

AI Number:	Activity Number:	Title V Permit Number:	NSR Permit Number:
588	000588-11152024-01	P008R4M1	NSR 0747M1R1

Report Type:	Permit Condition:
Title V Annual Compliance Certification Report - -	

Monitoring Start:	Monitoring End:	Report Due:	Report Certifed:	Status:
11/01/2023	10/31/2024	11/30/2024		Prepared

Preparer Name:	Title:
Valerie Litwinick	Environmental Analyst

Office Phone:	Office Ext:	Cell Phone:	E-mail:
806-513-1499			valerie.a.litwinick@xcelenergy.com

Certifier Name	Title:	Responsible Official for Title V?
David Low	Vice President of Operations	Yes

Office Phone:	Office Ext:	Cell Phone:	E-mail:
806-787-9553			david.low@xcelenergy.com

ATTACHMENTS

Upload Date	Document Title	File Name
11/15/2024	20241031_588 ACC P008-R4M1	20241031_588 ACC P008-R4.pdf

CERTIFICATION OF TRUTH, ACCURACY AND COMPLETENESS

I certify under penalty of law that I have had the opportunity to review, in human-readable format, the content of the electronic document to which I hereby certify and attest, and I further certify under penalty of law that, based on the information and belief formed after reasonable inquiry, the statements and information contained in this submission are true, accurate, and complete. I understand that making any false statement, representation, or certification of this submission may result in criminal penalties.

Certifier Name	Date
David Low	11/20/2024

This page left intentionally blank

Section 20

Other Relevant Information

Other relevant information. Use this attachment to clarify any part in the application that you think needs explaining. Reference the section, table, column, and/or field. Include any additional text, tables, calculations or clarifying information.

Additionally, the applicant may propose specific permit language for AQB consideration. In the case of a revision to an existing permit, the applicant should provide the old language and the new language in track changes format to highlight the proposed changes. If proposing language for a new facility or language for a new unit, submit the proposed operating condition(s), along with the associated monitoring, recordkeeping, and reporting conditions. In either case, please limit the proposed language to the affected portion of the permit.

No additional information.

This page left intentionally blank

Section 22: Certification

Company Name: __Southwestern Public Service Company_____

I, _____David Low_____, hereby certify that the information and data submitted in this application are true and as accurate as possible, to the best of my knowledge and professional expertise and experience.

Signed this __28___ day of ___February___, ___2025_____, upon my oath or affirmation, before a notary of the State of

____Texas_____.

_____ _____
*Signature Date

__David Low_____ __Regional Vice President, Operations _
Printed Name Title

Scribed and sworn before me on this __28___ day of ___February_____, ___2025_____.

My authorization as a notary of the State of _____Texas_____ expires on the

_____ day of _____, _____.

_____ _____
Notary's Signature Date

_____
Notary's Printed Name

*For Title V applications, the signature must be of the Responsible Official as defined in 20.2.70.7.AE NMAC.

Section 22: Certification

Company Name: Southwestern Public Service Company

I, David Low, hereby certify that the information and data submitted in this application are true and as accurate as possible, to the best of my knowledge and professional expertise and experience.

Signed this 28 day of February, 2025, upon my oath or affirmation, before a notary of the State of

Texas.

*Signature

2/28/25
Date

David Low
Printed Name

Regional Vice President, Operations
Title

Scribed and sworn before me on this 28 day of February, 2025.

My authorization as a notary of the State of Texas expires on the

18th day of February, 2029.

Notary's Signature

2/28/2025
Date

LaDonna Herring
Notary's Printed Name

LADONNA HERRING
Notary Public, State of Texas
Comm. Expires 02-18-2029
Notary ID 132932763

*For Title V applications, the signature must be of the Responsible Official as defined in 20.2.70.7.AE NMAC.

Liability, Cont'd.

(7) Each violation of a provision of 40 CFR parts 72, 73, 74, 75, 76, 77, and 78 by an affected source or affected unit, or by an owner or operator or designated representative of such source or unit, shall be a separate violation of the Act.

Effect on Other Authorities

No provision of the Acid Rain Program, an Acid Rain permit application, an Acid Rain permit, or an exemption under 40 CFR 72.7 or 72.8 shall be construed as:
(1) Except as expressly provided in title IV of the Act, exempting or excluding the owners and operators and, to the extent applicable, the designated representative of an affected source or affected unit from compliance with any other provision of the Act, including the provisions of title I of the Act relating to applicable National Ambient Air Quality Standards or State Implementation Plans;
(2) Limiting the number of allowances a unit can hold; *provided,* that the number of allowances held by the unit shall not affect the source's obligation to comply with any other provisions of the Act;
(3) Requiring a change of any kind in any State law regulating electric utility rates and charges, affecting any State law regarding such State regulation, or limiting such State regulation, including any prudence review requirements under such State law;
(4) Modifying the Federal Power Act or affecting the authority of the Federal Energy Regulatory Commission under the Federal Power Act; or,
(5) Interfering with or impairing any program for competitive bidding for power supply in a State in which such program is established.

STEP 5: Read the certification statement, sign, and date.

Certification

I am authorized to make this submission on behalf of the owners and operators of the affected source or affected units for which the submission is made. I certify under penalty of law that I have personally examined, and am familiar with, the statements and information submitted in this document and all its attachments. Based on my inquiry of those individuals with primary responsibility for obtaining the information, I certify that the statements and information are to the best of my knowledge and belief true, accurate, and complete. I am aware that there are significant penalties for submitting false statements and information or omitting required statements and information, including the possibility of fine or imprisonment.

Name: David Low	
Designated Representative or Alternate Representative Signature	Date: 2/28/25

This page left intentionally blank

New Mexico Environment Department Air Quality Bureau

Acid Rain Program

Instructions for Permit Application

(20.2.84 NMAC and 40 CFR 72.30 – 72.31)

The Acid Rain Program requires the designated representative to submit an Acid Rain permit application for each source with an affected unit. A complete Certificate of Representation must be received by EPA before the permit application is submitted to the New Mexico Environment Department Air Quality Bureau (NMED/AQB). A complete Acid Rain permit application, once submitted, is binding on the owners and operators of the affected source and is enforceable in the absence of a permit until the NMED/AQB either issues a permit to the source or disapproves the application.

Please type or print. If assistance is needed, contact the New Mexico Environment Department Air Quality Bureau at (505) 476-4300.

STEP 1 Use the plant name and ORIS Code listed on the Certificate of Representation for the plant. An ORIS code is a 4 or 5 digit number assigned by the Department of Energy's (DOE) Energy Information Agency (EIA) to facilities that generate electricity. For older facilities, "Plant Code" is synonymous with "ORISPL" and "Facility" codes. If the facility generates electricity but no Plant Code has been assigned, or if there is uncertainty regarding what the Plant Code is, contact EIA at (202) 586-4325 or (202) 586-2402.

STEP 2 In column "a," identify each unit at the facility by providing the appropriate unit identification number, consistent with the identifiers used in the Certificate of Representation and with submissions made to DOE and/or EIA. Do not list duct burners. For new units without identification numbers, owners and operators must assign identifiers consistent with EIA and DOE requirements. Each Acid Rain Program submission that includes the unit identification number(s) (e.g., Acid Rain permit applications, monitoring plans, quarterly reports, etc.) should reference those unit identification numbers in exactly the same way that they are referenced on the Certificate of Representation.

Submission Deadlines

For new units, an initial Acid Rain permit application must be submitted to the NMED/AQB 24 months before the date the unit commences operation. Acid Rain permit renewal applications must be submitted at least 6 months in advance of the expiration of the acid rain portion of a title V permit, or such longer time as provided for under the NMED/AQB operating permits regulation.

Submission Instructions Mail this form to:
New Mexico Environment Department, Air Quality Bureau, 1301 Siler Road, Building B, Santa Fe, NM 87507

Along with this application, include a copy of the Certificate of Representation Form and relevant permitting forms submitted to EPA (ie, NOx Compliance Plan and Averaging Plan and New Unit Exemption Form). If you have questions regarding this form, contact the New Mexico Environment Department Air Quality Bureau at (505) 476-4300 or call EPA's Acid Rain Hotline at (202) 343-9620.

Paperwork Burden Estimate

The public reporting and record keeping burden for this collection of information is estimated to average 8 hours per response. Burden means the total time, effort, or financial resources expended by persons to generate, maintain, retain, or disclose or provide information to or for a Federal agency. This includes the time needed to review instructions; develop, acquire, install, and utilize technology and systems for the purposes of collecting, validating, and verifying information, processing and maintaining information, and disclosing and providing information; adjust the existing ways to comply with any previously applicable instructions and requirements; train personnel to be able to respond to a collection of information; search data sources; complete and review the collection of information; and transmit or otherwise disclose the information. An agency may not conduct or sponsor, and a person is not required to respond to, a collection of information unless it displays a currently valid OMB control number.

Send comments on the Agency's need for this information, the accuracy of the provided burden estimates, and any suggested methods for minimizing respondent burden, including through the use of automated collection techniques to the Director, Collection Strategies Division, U.S. Environmental Protection Agency (2822T), 1200 Pennsylvania Ave., NW., Washington, D.C. 20460. Include the OMB control number in any correspondence. Do not send the completed form to this address.

NEW MEXICO ENVIORNMENT DEPARTMENT
AIR QUALITY BUREAU
ACID RAIN PROGRAM

PHASE II PERMIT APPLICATION

For more information, see instructions and refer to 20.2.84 NMAC and 40 CFR 72.30 – 72.31

This submission is: [ ] **New** [X] **Revised**

STEP 1: Identify the source by plant name, State, and ORIS code.

Facility (Source) Name	State	ORIS Code
Maddox Station	N.M.	2446

STEP 2: Enter the unit ID# for each affected unit at the affected source in column "A."

A	B	C	D
Unit ID #	Unit will hold Allowances in Accordance with 40 CFR Part 72.9(c)(1)	New Units Commence Operation Date	New Units Monitor Certification Deadline
051B	YES	N/A	N/A
	YES		
	YES		
	YES		
	YES		
	YES		
	YES		
	YES		
	YES		
	YES		

STEP 3: Complete the additional information sheet and provide here or on the attached sheet a brief description of each unit.

Description of unit:
051B – Natural Gas Fire Boiler

Additional Information

Applicant: (Facility Owner and Operator)	Name: Southwestern Public Service Company Mailing Address: 790 South Buchanan St Amarillo, Texas 79101 Phone: 806-513-1499 Fax: N/A
Name and Location of Proposed Facility:	Facility Name: Maddox Station Driving Directions: Approx. 8 miles W. of Hobbs NM on US 62 Address: PO Box 1650 Hobbs, NM 88241 Section: 25 Range: 36E Township: 18S Elevation: 3,760 Latitude: 32 deg. 42 min. 47 sec. Longitude: 103 deg. 18 min. 36 sec. UTM Zone: 13 UTMH: 659.0 UTMV: 3621.0
SIC Code: (Primary, Secondary)	4911
Designated Representative (DR): (Name, or provide copy of EPA Certificate of Representation form.)	Name: David Low Title: Regional Vice President, Operations Company: Southwestern Public Service Company Phone: 806-378-2730 Fax: N/A Email address: David.Low@xcelenergy.com
Alternate DR:	Name: Karalee Snyder Title: Manager, Environmental Services Company: Southwestern Public Service Company Phone: 806-378-2195 Fax: N/A Email address: Karalee.D.Snyder@xcelenergy.com
Contact Person:	Name: Amber Houchin Title: Environmental Analyst Company: Southwestern Public Service Company Phone: 806-378-2191 Fax: N/A Email address: Amber.L.Houchin@xcelenergy.com

STEP 4: Read the standard requirements and certification, enter the name of the designated representative, sign, and date

Permit Requirements

(1) The designated representative of each affected source and each affected unit at the source shall:
(i) Submit a complete Acid Rain permit application (including a compliance plan) under 40 CFR part 72 in accordance with the deadlines specified in 40 CFR 72.30; and
(ii) Submit in a timely manner any supplemental information that the permitting authority determines is necessary in order to review an Acid Rain permit application and issue or deny an Acid Rain permit;
(2) The owners and operators of each affected source and each affected unit at the source shall:
(i) Operate the unit in compliance with a complete Acid Rain permit application or a superseding Acid Rain permit issued by the permitting authority; and
(ii) Have an Acid Rain Permit.

Monitoring Requirements

(1) The owners and operators and, to the extent applicable, designated representative of each affected source and each affected unit at the source shall comply with the monitoring requirements as provided in 40 CFR part 75.
(2) The emissions measurements recorded and reported in accordance with 40 CFR part 75 shall be used to determine compliance by the source or unit, as appropriate, with the Acid Rain emissions limitations and emissions reduction requirements for sulfur dioxide and nitrogen oxides under the Acid Rain Program.
(3) The requirements of 40 CFR part 75 shall not affect the responsibility of the owners and operators to monitor emissions of other pollutants or other emissions characteristics at the unit under other applicable requirements of the Act and other provisions of the operating permit for the source.

Sulfur Dioxide Requirements

(1) The owners and operators of each source and each affected unit at the source shall:
(i) Hold allowances, as of the allowance transfer deadline, in the source's compliance account (after deductions under 40 CFR 73.34(c)), not less than the total annual emissions of sulfur dioxide for the previous calendar year from the affected units at the source; and
(ii) Comply with the applicable Acid Rain emissions limitations for sulfur dioxide.
(2) Each ton of sulfur dioxide emitted in excess of the Acid Rain emissions limitations for sulfur dioxide shall constitute a separate violation of the Act.
(3) An affected unit shall be subject to the requirements under paragraph (1) of the sulfur dioxide requirements as follows:
(i) Starting January 1, 2000, an affected unit under 40 CFR 72.6(a)(2); or
(ii) Starting on the later of January 1, 2000 or the deadline for monitor certification under 40 CFR part 75, an affected unit under 40 CFR 72.6(a)(3).
(4) Allowances shall be held in, deducted from, or transferred among Allowance Tracking System accounts in accordance with the Acid Rain Program.
(5) An allowance shall not be deducted in order to comply with the requirements under paragraph (1) of the sulfur dioxide requirements prior to the calendar year for which the allowance was allocated.
(6) An allowance allocated by the Administrator under the Acid Rain Program is a limited authorization to emit sulfur dioxide in accordance with the Acid Rain Program. No provision of the Acid Rain Program, the Acid Rain permit application, the Acid Rain permit, or an exemption under 40 CFR 72.7 or 72.8 and no provision of law shall be construed to limit the authority of the United States to terminate or limit such authorization.
(7) An allowance allocated by the Administrator under the Acid Rain Program does not constitute a property right.

Nitrogen Oxides Requirements The owners and operators of the source and each affected unit at the source shall comply with the applicable Acid Rain emissions limitation for nitrogen oxides.

Excess Emissions Requirements

(1) The designated representative of an affected unit that has excess emissions in any calendar year shall submit a proposed offset plan, as required under 40 CFR part 77.
(2) The owners and operators of an affected source that has excess emissions in any calendar year shall:
(i) Pay without demand the penalty required, and pay upon demand the interest on that penalty, as required by 40 CFR part 77; and
(ii) Comply with the terms of an approved offset plan, as required by 40 CFR part 77.

Recordkeeping and Reporting Requirements

(1)Unless otherwise provided, the owners and operators of the source and each affected unit at the source shall keep on site at the source each of the following documents for a period of 5 years from the date the document is created. This period may be extended for cause, at any time prior to the end of 5 years, in writing by the Administrator or permitting authority:
(i) The certificate of representation for the designated representative for the source and each affected unit at the source and all documents that demonstrate the truth of the statements in the certificate of representation, in accordance with 40 CFR 72.24; provided that the certificate and documents shall be retained on site at the source beyond such 5-year period until such documents are superseded because of the submission of a new certificate of representation changing the designated representative;
(ii) All emissions monitoring information, in accordance with 40 CFR part 75, provided that to the extent that 40 CFR part 75 provides for a 3-year period for recordkeeping, the 3-year period shall apply.
(iii) Copies of all reports, compliance certifications, and other submissions and all records made or required under the Acid Rain Program; and,
(iv) Copies of all documents used to complete an Acid Rain permit application and any other submission under the Acid Rain Program or to demonstrate compliance with the requirements of the Acid Rain Program.
(2)The designated representative of an affected source and each affected unit at the source shall submit the reports and compliance certifications required under the Acid Rain Program, including those under 40 CFR part 72 subpart I and 40 CFR part 75.

Liability

(1) Any person who knowingly violates any requirement or prohibition of the Acid Rain Program, a complete Acid Rain permit application, an Acid Rain permit, or an exemption under 40 CFR 72.7 or 72.8, including any requirement for the payment of any penalty owed to the United States, shall be subject to enforcement pursuant to section 113(c) of the Act.
(2) Any person who knowingly makes a false, material statement in any record, submission, or report under the Acid Rain Program shall be subject to criminal enforcement pursuant to section 113(c) of the Act and 18 U.S.C. 1001.
(3) No permit revision shall excuse any violation of the requirements of the Acid Rain Program that occurs prior to the date that the revision takes effect.
(4) Each affected source and each affected unit shall meet the requirements of the Acid Rain Program.
(5) Any provision of the Acid Rain Program that applies to an affected source (including a provision applicable to the designated representative of an affected source) shall also apply to the owners and operators of such source and of the affected units at the source.
(6) Any provision of the Acid Rain Program that applies to an affected unit (including a provision applicable to the designated representative of an affected unit) shall also apply to the owners and operators of such unit.

Liability, Cont'd.

(7) Each violation of a provision of 40 CFR parts 72, 73, 74, 75, 76, 77, and 78 by an affected source or affected unit, or by an owner or operator or designated representative of such source or unit, shall be a separate violation of the Act.

Effect on Other Authorities

No provision of the Acid Rain Program, an Acid Rain permit application, an Acid Rain permit, or an exemption under 40 CFR 72.7 or 72.8 shall be construed as:
(1) Except as expressly provided in title IV of the Act, exempting or excluding the owners and operators and, to the extent applicable, the designated representative of an affected source or affected unit from compliance with any other provision of the Act, including the provisions of title I of the Act relating to applicable National Ambient Air Quality Standards or State Implementation Plans;
(2) Limiting the number of allowances a unit can hold; *provided,* that the number of allowances held by the unit shall not affect the source's obligation to comply with any other provisions of the Act;
(3) Requiring a change of any kind in any State law regulating electric utility rates and charges, affecting any State law regarding such State regulation, or limiting such State regulation, including any prudence review requirements under such State law;
(4) Modifying the Federal Power Act or affecting the authority of the Federal Energy Regulatory Commission under the Federal Power Act; or,
(5) Interfering with or impairing any program for competitive bidding for power supply in a State in which such program is established.

STEP 5: Read the certification statement, sign, and date.

Certification

I am authorized to make this submission on behalf of the owners and operators of the affected source or affected units for which the submission is made. I certify under penalty of law that I have personally examined, and am familiar with, the statements and information submitted in this document and all its attachments. Based on my inquiry of those individuals with primary responsibility for obtaining the information, I certify that the statements and information are to the best of my knowledge and belief true, accurate, and complete. I am aware that there are significant penalties for submitting false statements and information or omitting required statements and information, including the possibility of fine or imprisonment.

Name: David Low	
Designated Representative or Alternate Representative Signature	Date: