Trinity Consultants
1800 W Loop S, Ste 1000, Houston, TX 77027 / P 713.552.1371 / F 713.552.1374 / **trinityconsultants.com**

May 20, 2025

Permit Programs Manager
NMED Air Quality Bureau
525 Camino de los Marquez Suite 1
Santa Fe, NM 87505-1816

*RE: Application for Initial Title V Operating Permit*
*Targa Northern Delaware LLC - Road Runner Gas Processing Plant*

Permit Programs Manager:

On behalf of Targa Northern Delaware LLC (Targa), Trinity Consultants is submitting an application for an initial Title V operating permit for the Road Runner Gas Processing Plant, located in Eddy County. This application incorporates changes made with the issuance of NSR Permit No. 7200-M5, which was issued on August 28, 2024.

The format and content of this application are consistent with the Bureau's current policy regarding Title V applications; it is a complete application package using the most current application form. Targa requests compliance reporting periods that start on August 16th and February 16th of each year, and an annual compliance certification period that starts on August 16th of each year.

Enclosed is a hard copy of the application, including the original certification. Electronic files will be provided upon request from our assigned permit engineer. Please feel free to contract me at (217) 971-5797 or by email at andrea.sayles@trinityconsultants.com if you have any questions regarding this application. Alternatively, you may contact Robert Andries at (713) 584-1360 or by email at randries@targaresources.com.

Sincerely,

TRINITY CONSULTANTS

Andrea Sayles

Andrea Sayles
Managing Consultant

Cc: Robert Andries (Targa Northern Delaware, LLC)

Trinity Project File: 253201.0036

# NMED AIR QUALITY BUREAU
# INITIAL TITLE V APPLICATION

## Targa Northern Delaware, LLC
## Road Runner Gas Processing Plant


**Prepared By:**
Robert Andries – Sr. Environmental Specialist

**Targa Northern Delaware, LLC**
811 Louisiana
Suite 2100
Houston, TX 77002-1400

Andrea Sayles – Managing Consultant
Neel More – Consultant

**TRINITY CONSULTANTS**
1800 W Loop South
Suite 1000
Houston, TX 77027
(713) 552-1371


May 2025

Project 253201.0036

**Air Permit Application**
**Compliance History Disclosure Form**

Pursuant to Subsection 74-2-7(S) of the New Mexico Air Quality Control Act ("AQCA"), NMSA §§ 74-2-1 to -17, the New Mexico Environment Department ("Department") may deny any permit application or revoke any permit issued pursuant to the AQCA if, within ten years immediately preceding the date of submission of the permit application, the applicant met any one of the criteria outlined below. In order for the Department to deem an air permit application administratively complete, or issue an air permit for those permits without an administrative completeness determination process, the applicant must complete this Compliance History Disclosure Form as specified in Subsection 74-2-7(P). An existing permit holder (permit issued prior to June 18, 2021) shall provide this Compliance History Disclosure Form to the Department upon request.

| **Permittee/Applicant Company Name** | | **Expected Application Submittal Date** |
|---|---|---|
| Targa Northern Delaware, LLC | | May 30, 2025 |
| **Permittee/Company Contact** | **Phone** | **Email** |
| Robert Andries | (713) 584-1360 | randries@targaresources.com |

| **Within the 10 years preceding the expected date of submittal of the application, has the permittee or applicant:** | | |
|---|---|---|
| 1 | Knowingly misrepresented a material fact in an application for a permit? | ☐ Yes ☒ No |
| 2 | Refused to disclose information required by the provisions of the New Mexico Air Quality Control Act? | ☐ Yes ☒ No |
| 3 | Been convicted of a felony related to environmental crime in any court of any state or the United States? | ☐ Yes ☒ No |
| 4 | Been convicted of a crime defined by state or federal statute as involving or being in restraint of trade, price fixing, bribery, or fraud in any court of any state or the United States? | ☐ Yes ☒ No |
| 5a | Constructed or operated any facility for which a permit was sought, including the current facility, without the required air quality permit(s) under 20.2.70 NMAC, 20.2.72 NMAC, 20.2.74 NMAC, 20.2.79 NMAC, or 20.2.84 NMAC? | ☐ Yes ☒ No |
| 5b | If "No" to question 5a, go to question 6.<br>If "Yes" to question 5a, state whether each facility that was constructed or operated without the required air quality permit met at least one of the following exceptions:<br><br>a. The unpermitted facility was discovered after acquisition during a timely environmental audit that was authorized by the Department; or<br><br>b. The operator of the facility estimated that the facility's emissions would not require an air permit, **and** the operator applied for an air permit within 30 calendar days of discovering that an air permit was required for the facility. | ☐ Yes ☐ No |
| 6 | Had any permit revoked or permanently suspended for cause under the environmental laws of any state or the United States? | ☐ Yes ☒ No |
| 7 | For each "yes" answer, please provide an explanation and documentation. | |

| **Mail Application To:** | | **For Department use only:** |
|---|---|---|
| New Mexico Environment Department<br>Air Quality Bureau<br>Permits Section<br>525 Camino de los Marquez, Suite 1<br>Santa Fe, New Mexico, 87505<br><br>Phone: (505) 476-4300<br>Fax: (505) 476-4375<br>www.env.nm.gov/aqb | | |

# Universal Air Quality Permit Application

### Use this application for NOI, NSR, or Title V sources.

Use this application for: the initial application, modifications, technical revisions, and renewals. For technical revisions, complete Sections, 1-A, 1-B, 2-E, 3, 9 and any other sections that are relevant to the requested action; coordination with the Air Quality Bureau permit staff prior to submittal is encouraged to clarify submittal requirements and to determine if more or less than these sections of the application are needed. Use this application for streamline permits as well.

**This application is submitted as** (check all that apply): ☐ Request for a No Permit Required Determination (no fee)
☐ **Updating** an application currently under NMED review. Include this page and all pages that are being updated (no fee required).
**Construction Status:** ☐ Not Constructed ☒ Existing Permitted (or NOI) Facility ☐ Existing Non-permitted (or NOI) Facility
**Minor Source:** ☐ NOI 20.2.73 NMAC ☐ 20.2.72 NMAC application or revision ☐ 20.2.72.300 NMAC Streamline application
**Title V Source:** ☒ Title V (new) ☐ Title V renewal ☐ TV minor mod. ☐ TV significant mod. ☐ TV Acid Rain: ☐ New ☐ Renewal
**PSD Major Source:** ☐ PSD major source (new) ☐ Minor Modification to a PSD source ☐ a PSD major modification

**Acknowledgements:**

☒ I acknowledge that a pre-application meeting is available to me upon request. ☒ Title V Operating, Title IV Acid Rain, and NPR applications have no fees.
☐ $500 NSR application Filing Fee enclosed OR ☐ The full permit fee associated with 10 fee points (required w/ streamline applications).
☐ Check No.: N/A in the amount of N/A
☒ I acknowledge the required submittal format for the hard copy application is printed double sided 'head-to-toe', 2-hole punched (except the Sect. 2 landscape tables is printed 'head-to-head'), numbered tab separators. Incl. a copy of the check on a separate page.
☒ I acknowledge there is an annual fee for permits in addition to the permit review fee: www.env.nm.gov/air-quality/permit-fees-2/.
☐ This facility qualifies for the small business fee reduction per 20.2.75.11.C. NMAC. The full $500.00 filing fee is included with this application and I understand the fee reduction will be calculated in the balance due invoice. The Small Business Certification Form has been previously submitted or is included with this application. (Small Business Environmental Assistance Program Information: www.env.nm.gov/air-quality/small-biz-eap-2/.)

**Citation:** Please provide the **low level citation** under which this application is being submitted: **20.2.70.300.B(2) NMAC and 20.2.70.404.C(1)(a) NMAC**
(e.g. application for a new minor source would be 20.2.72.200.A NMAC, one example for a Technical Permit Revision is 20.2.72.219.B.1.b NMAC, a Title V acid rain application would be: 20.2.70.200.C NMAC)

## Section 1 – Facility Information

| **Section 1-A: Company Information** | | AI # if known: **36536** | Updating Permit/NOI #: **TBD** |
|---|---|---|---|
| 1 | Facility Name: **Road Runner Gas Processing Plant** | Plant primary SIC Code (4 digits): **1311** | |
| | | Plant NAIC code (6 digits): **211112** | |
| a | Facility Street Address (If no facility street address, provide directions from a prominent landmark):<br>**From Allsup's store in Loving, go South on Pecos Hwy to Higby Hole Road to Bounds Road. Turn West for 0.5 miles to facility on North side of road.** | | |
| 2 | Plant Operator Company Name: **Targa Northern Delaware, LLC** | Phone/Fax: **(575) 631-7093 / (575) 396-7702** | |

| | | |
|---|---|---|
| a | Plant Operator Address: **201 S 4th Street, Artesia, NM, 88210** | |
| b | Plant Operator's New Mexico Corporate ID or Tax ID: **1948249** | |
| 3 | Plant Owner(s) name(s): **Targa Northern Delaware, LLC** | Phone/Fax: **(575) 631-7093 / (575) 396-7702** |
| a | Plant Owner(s) Mailing Address(s): **201 S 4th Street, Artesia, NM, 88210** | |
| 4 | Bill To (Company): **Targa Northern Delaware, LLC** | Phone/Fax: **(575) 631-7093 / (575) 396-7702** |
| a | Mailing Address: **201 S 4th Street, Artesia, NM, 88210** | E-mail: Jaylen.fuente@targaresources.com |
| 5 | ☐ Preparer:<br>☒ Consultant: **Andrea Sayles, Trinity Consultants** | Phone/Fax: (**217) 971-5797** |
| a | Mailing Address: **1800 W Loop S #1000, Houston, TX 77027** | E-mail: andrea.sayles@trinityconsultants.com |
| 6 | Plant Operator Contact: **James Aguilar** | Phone/Fax: **(575) 200-8895093 / (575) 396-7702** |
| a | Address: **201 South 4th Street, Artesia, NM, 88210** | E-mail: james.aguilar@targaresources.com |
| 7 | Air Permit Contact: **Robert Andries** | Title: **Sr. Environmental Specialist** |
| a | E-mail: randries@targaresources.com | Phone/Fax: **(713) 584-1360 / (713) 584-1522** |
| b | Mailing Address: **811 Louisiana Street, Ste 2100, Houston, TX 77002** | |
| c | The designated Air permit Contact will receive all official correspondence (i.e. letters, permits) from the Air Quality Bureau. | |

## Section 1-B: Current Facility Status

| | | |
|---|---|---|
| 1.a | Has this facility already been constructed? ☒ Yes ☐ No | 1.b If yes to question 1.a, is it currently operating in New Mexico? ☒ Yes ☐ No |
| 2 | If yes to question 1.a, was the existing facility subject to a Notice of Intent (NOI) (20.2.73 NMAC) before submittal of this application?<br>☐ Yes ☒ No | If yes to question 1.a, was the existing facility subject to a construction permit (20.2.72 NMAC) before submittal of this application? ☒ Yes ☐ No |
| 3 | Is the facility currently shut down? ☐ Yes ☒ No | If yes, give month and year of shut down (MM/YY): **N/A** |
| 4 | Was this facility constructed before 8/31/1972 and continuously operated since 1972? ☐ Yes ☒ No | |
| 5 | If Yes to question 3, has this facility been modified (see 20.2.72.7.P NMAC) or the capacity increased since 8/31/1972?<br>☐ Yes ☐ No ☒ N/A | |
| 6 | Does this facility have a Title V operating permit (20.2.70 NMAC)?<br>☐ Yes ☒ No | If yes, the permit No. is: **N/A** |
| 7 | Has this facility been issued a No Permit Required (NPR)?<br>☐ Yes ☒ No | If yes, the NPR No. is: **N/A** |
| 8 | Has this facility been issued a Notice of Intent (NOI)? ☐ Yes ☒ No | If yes, the NOI No. is: **N/A** |
| 9 | Does this facility have a construction permit (20.2.72/20.2.74 NMAC)?<br>☒ Yes ☐ No | If yes, the permit No. is: **7200-M5** |
| 10 | Is this facility registered under a General permit (GCP-1, GCP-2, etc.)?<br>☐ Yes ☒ No | If yes, the register No. is: **N/A** |

## Section 1-C: Facility Input Capacity & Production Rate

| | | | | |
|---|---|---|---|---|
| 1 | What is the facility's maximum input capacity, specify units (reference here and list capacities in Section 20, if more room is required) | | | |
| a | Current | Hourly: **30.63 MMscf** | Daily: **735 MMscf** | Annually: **268,275 MMscf** |
| b | Proposed | Hourly: **30.63 MMscf** | Daily: **735 MMscf** | Annually: **268,275 MMscf** |
| 2 | What is the facility's maximum production rate, specify units (reference here and list capacities in Section 20, if more room is required) | | | |
| a | Current | Hourly: **30.63 MMscf** | Daily: **735 MMscf** | Annually: **268,275 MMscf** |
| b | Proposed | Hourly: **30.63 MMscf** | Daily: **735 MMscf** | Annually: **268,275 MMscf** |

## Section 1-D: Facility Location Information

| | | | | |
|---|---|---|---|---|
| 1 | Latitude (decimal degrees): **32.265519°** | Longitude (decimal degrees): **-104.108318°** | County: **Eddy** | Elevation (ft): **3,124** |
| 2 | UTM Zone: ☐ 12 or ☒ 13 | Datum: ☒ NAD 83 ☐ WGS 84 | | |
| a | UTM E (in meters, to nearest 10 meters): **583,982.0 m** | UTM N (in meters, to nearest 10 meters): **3,570,216.0 m** | | |
| 3 | Name and zip code of nearest New Mexico town: **Loving, NM** | | | |
| 4 | Detailed Driving Instructions from nearest NM town (attach a road map if necessary): From the intersection of Highway 8 and Monument Highway, travel west on Monument Highway for approximately 3.4 miles. The plant will be on the left. | | | |
| 5 | The facility is **1.6** (distance) miles **south-southwest** (direction) of **Loving, NM** (nearest town). | | | |
| 6 | Land Status of facility (check one): ☒ Private ☐ Indian/Pueblo ☐ Government ☐ BLM ☐ Forest Service ☐ Military | | | |
| 7 | List all municipalities, Indian tribes, and counties within a ten (10) mile radius (20.2.72.203.B.2 NMAC) of the property on which the facility is proposed to be constructed or operated: **Municipalities: None; Indian Tribes: None; Eddy County, NM** | | | |
| 8 | **20.2.72** NMAC applications **only**: Will the property on which the facility is proposed to be constructed or operated be closer than 50 km (31 miles) to other states, Bernalillo County, or a Class I area (see www.env.nm.gov/air-quality/modeling-publications/ )? ☒ Yes ☐ No (20.2.72.206.A.7 NMAC) If yes, list all with corresponding distances in kilometers: **Lea County (37 km east); Texas 30.6 km south); Carlsbad Caverns National Park (26 km west southwest)** | | | |
| 9 | Name nearest Class I area: **Carlsbad Caverns National Park (26 km)** | | | |
| 10 | Shortest distance (in km) from facility boundary to the boundary of the nearest Class I area (to the nearest 10 meters): **25.97 km** | | | |
| 11 | Distance (meters) from the perimeter of the Area of Operations (AO is defined as the plant site inclusive of all disturbed lands, including mining overburden removal areas) to nearest residence, school or occupied structure: **760 m** | | | |
| 12 | Method(s) used to delineate the Restricted Area: **Continuous Fencing**<br><br>"**Restricted Area**" is an area to which public entry is effectively precluded. Effective barriers include continuous fencing, continuous walls, or other continuous barriers approved by the Department, such as rugged physical terrain with steep grade that would require special equipment to traverse. If a large property is completely enclosed by fencing, a restricted area within the property may be identified with signage only. Public roads cannot be part of a Restricted Area. | | | |
| 13 | Does the owner/operator intend to operate this source as a portable stationary source as defined in 20.2.72.7.X NMAC?<br>☐ Yes ☒ No<br>A portable stationary source is not a mobile source, such as an automobile, but a source that can be installed permanently at one location or that can be re-installed at various locations, such as a hot mix asphalt plant that is moved to different job sites. | | | |
| 14 | Will this facility operate in conjunction with other air regulated parties on the same property? ☒ No ☐ Yes<br>If yes, what is the name and permit number (if known) of the other facility? N/A | | | |

## Section 1-E: Proposed Operating Schedule (The 1-E.1 & 1-E.2 operating schedules may become conditions in the permit.)

| | | | | | |
|---|---|---|---|---|---|
| 1 | Facility **maximum** operating ($\frac{hours}{day}$): **24** | ($\frac{days}{week}$): **7** | ($\frac{weeks}{year}$): **52** | ($\frac{hours}{year}$): **8760** | |
| 2 | Facility's maximum daily operating schedule (if less than 24 $\frac{hours}{day}$)? Start: **N/A** | ☐AM ☐PM | End: **N/A** | ☐AM ☐PM | |
| 3 | Month and year of anticipated start of construction: **N/A** | | | | |
| 4 | Month and year of anticipated construction completion: **N/A** | | | | |
| 5 | Month and year of anticipated startup of new or modified facility: **N/A** | | | | |
| 6 | Will this facility operate at this site for more than one year? ☒ Yes ☐ No | | | | |

## Section 1-F: Other Facility Information

| | |
|---|---|
| 1 | Are there any current Notice of Violations (NOV), compliance orders, or any other compliance or enforcement issues related to this facility? ☐ Yes ☒ No If yes, specify: : |

| | | | |
|---|---|---|---|
| a | If yes, NOV date or description of issue: | | NOV Tracking No: |
| b | Is this application in response to any issue listed in 1-F, 1 or 1a above? ☐ Yes ☒ No<br>If Yes, provide the 1c & 1d info below: | | |
| c | Document Title: | Date: | Requirement # (or page # and paragraph #): N/A |
| d | Provide the required text to be inserted in this permit: | | |
| 2 | Is air quality dispersion modeling or modeling waiver being submitted with this application? ☐ Yes ☒ No | | |
| 3 | Does this facility require an "Air Toxics" permit under 20.2.72.400 NMAC & 20.2.72.502, Tables A and/or B? ☐ Yes ☒ No | | |
| 4 | Will this facility be a source of federal Hazardous Air Pollutants (HAP)? ☒ Yes ☐ No | | |
| a | If Yes, what type of source? ☐ **Major** (☐ ≥10 tpy of any single HAP **OR** ☐ ≥25 tpy of any combination of HAPS) **OR** ☒ **Minor** (☒ <10 tpy of any single HAP **AND** ☒ <25 tpy of any combination of HAPS) | | |
| 5 | Is any unit exempt under 20.2.72.202.B.3 NMAC? ☐ Yes ☑ No | | |
| a | If yes, include the name of company providing commercial electric power to the facility: **N/A**<br><br>Commercial power is purchased from a commercial utility company, which specifically does not include power generated on site for the sole purpose of the user. | | |

## Section 1-G: Streamline Application (This section applies to 20.2.72.300 NMAC Streamline applications only)

| | | |
|---|---|---|
| 1 | ☐ I have filled out Section 18, "Addendum for Streamline Applications." | ☒ N/A (This is not a Streamline application.) |

## Section 1-H: Current Title V Information - Required for all applications from TV Sources

**(Title V-source required information for all applications submitted pursuant to 20.2.72 NMAC (Minor Construction Permits), or 20.2.74/20.2.79 NMAC (Major PSD/NNSR applications), and/or 20.2.70 NMAC (Title V))**

| | | | |
|---|---|---|---|
| 1 | Responsible Official (R.O.) **Jimmy Oxford**<br>(20.2.70.300.D.2 NMAC): | | Phone: **(940) 220-2493** |
| a | R.O. Title: **Vice President Operations** | R.O. e-mail: JOxford@targaresources.com | |
| b | R. O. Address: **4401 North I-35, Suite 303 Denton, Texas 76207** | | |
| 2 | Alternate Responsible Official<br>(20.2.70.300.D.2 NMAC): **N/A** | | Phone: **N/A** |
| a | A. R.O. Title: **N/A** | A. R.O. e-mail: **N/A** | |
| b | A. R. O. Address: **N/A** | | |
| 3 | Company's Corporate or Partnership Relationship to any other Air Quality Permittee (List the names of any companies that have operating (20.2.70 NMAC) permits and with whom the applicant for this permit has a corporate or partnership relationship): **Targa Resources, LLC** | | |
| 4 | Name of Parent Company ("Parent Company" means the primary name of the organization that owns the company to be permitted wholly or in part.): **Targa Resources, LLC** | | |
| a | Address of Parent Company: **811 Louisiana Suite 2100, Houston, TX 77002-1400** | | |
| 5 | Names of Subsidiary Companies ("Subsidiary Companies" means organizations, branches, divisions or subsidiaries, which are owned, wholly or in part, by the company to be permitted.): **None.** | | |
| 6 | Telephone numbers & names of the owners' agents and site contacts familiar with plant operations:<br>**Tillman Austin – (575) 942-7435 and James Aguilar – (575) 200-8895** | | |
| 7 | Affected Programs to include Other States, local air pollution control programs (i.e. Bernalillo) and Indian tribes:<br>Will the property on which the facility is proposed to be constructed or operated be closer than 80 km (50 miles) from other states, local pollution control programs, and Indian tribes and pueblos (20.2.70.402.A.2 and 20.2.70.7.B)? If yes, state which ones and provide the distances in kilometers: Yes; The facility is 30.6 km from Texas. No other states, local pollution control programs, or Indian tribes and pueblos are within 50 miles of Roadrunner Gas Plant. | | |

# Section 1-I – Submittal Requirements

Each 20.2.73 NMAC (**NOI**), a 20.2.70 NMAC (**Title V**), a 20.2.72 NMAC (**NSR** minor source), or 20.2.74 NMAC (**PSD**) application package shall consist of the following:

## Hard Copy Submittal Requirements:

1) One hard copy **original signed and notarized application package printed double sided 'head-to-toe' 2-hole punched** as we bind the document on top, not on the side; except Section 2 (landscape tables), which should be head-to-head. Please use **numbered tab separators** in the hard copy submittal(s) as this facilitates the review process. For NOI submittals only, hard copies of UA1, Tables 2A, 2D & 2F, Section 3 and the signed Certification Page are required. Please include a copy of the check on a separate page.

2) If the application is for a minor NSR, PSD, NNSR, or Title V application, include one working hard **copy** for Department use. This copy should be printed in book form, 3-hole punched, and **must be double sided**. Note that this is in addition to the head-to-to 2-hole punched copy required in 1) above. Minor NSR Technical Permit revisions (20.2.72.219.B NMAC) only need to fill out Sections 1-A, 1-B, 3, and should fill out those portions of other Section(s) relevant to the technical permit revision. TV Minor Modifications need only fill out Sections 1-A, 1-B, 1-H, 3, and those portions of other Section(s) relevant to the minor modification. NMED may require additional portions of the application to be submitted, as needed.

3) The entire NOI or Permit application package, including the full modeling study, should be submitted electronically. Electronic files for applications for NOIs, any type of General Construction Permit (GCP), or technical revisions to NSRs must be submitted with compact disk (CD) or digital versatile disc (DVD). For these permit application submittals, **two** CD copies are required (in sleeves, not crystal cases, please), with additional CD copies as specified below. NOI applications require only a single CD submittal. Electronic files for other New Source Review (construction) permits/permit modifications or Title V permits/permit modifications can be submitted on CD/DVD or sent through AQB's secure file transfer service.

**Electronic files sent by (check one):**

☐ CD/DVD attached to paper application

☒ Secure electronic transfer. Air Permit Contact Name: **Andrea Sayles**, Email: **andrea.sayles@trinityconsultants.com** Phone number **(217) 971-5797.**

a. If the file transfer service is chosen by the applicant, after receipt of the application, the Bureau will email the applicant with instructions for submitting the electronic files through a secure file transfer service. Submission of the electronic files through the file transfer service needs to be completed within 3 business days after the invitation is received, so the applicant should ensure that the files are ready when sending the hard copy of the application. The applicant will not need a password to complete the transfer. **Do not use the file transfer service for NOIs, any type of GCP, or technical revisions to NSR permits.**

4) Optionally, the applicant may submit the files with the application on compact disk (CD) or digital versatile disc (DVD) following the instructions above and the instructions in 5 for applications subject to PSD review.

5) If **air dispersion modeling** is required by the application type, include the **NMED Modeling Waiver** and/or electronic air dispersion modeling report, input, and output files. The dispersion modeling ***summary report only*** should be submitted as hard copy(ies) unless otherwise indicated by the Bureau.

6) If the applicant submits the electronic files on CD and the application is subject to PSD review under 20.2.74 NMAC (PSD) or NNSR under 20.2.79 NMC include,
   a. one additional CD copy for US EPA,
   b. one additional CD copy for each federal land manager affected (NPS, USFS, FWS, USDI) and,
   c. one additional CD copy for each affected regulatory agency other than the Air Quality Bureau.

   If the application is submitted electronically through the secure file transfer service, these extra CDs do not need to be submitted.

## Electronic Submittal Requirements [in addition to the required hard copy(ies)]:

1) All required electronic documents shall be submitted as 2 separate CDs or submitted through the AQB secure file transfer service. Submit a single PDF document of the entire application as submitted and the individual documents comprising the application.

2) The documents should also be submitted in Microsoft Office compatible file format (Word, Excel, etc.) allowing us to access the text and formulas in the documents (copy & paste). Any documents that cannot be submitted in a Microsoft Office compatible format shall be saved as a PDF file from within the electronic document that created the file. If you are unable to provide Microsoft office compatible electronic files or internally generated PDF files of files (items that were not created electronically: i.e. brochures, maps, graphics, etc,), submit these items in hard copy format. We must be able to review the formulas and inputs that calculated the emissions.

3) It is preferred that this application form be submitted as 4 electronic files (3 MSWord docs: Universal Application section 1 [UA1], Universal Application section 3-19 [UA3], and Universal Application 4, the modeling report [UA4]) and 1 Excel file of the tables (Universal Application section 2 [UA2]). Please include as many of the 3-19 Sections as practical in a single MS Word electronic document. Create separate electronic file(s) if a single file becomes too large or if portions must be saved in a file format other than MS Word.

4) The electronic file names shall be a maximum of 25 characters long (including spaces, if any). The format of the electronic Universal Application shall be in the format: "A-3423-FacilityName". The "A" distinguishes the file as an application submittal, as opposed to other documents the Department itself puts into the database. Thus, all electronic application submittals should begin with "A-". Modifications to existing facilities should use the core permit number (i.e. '3423') the Department assigned to the facility as the next 4 digits. Use 'XXXX' for new facility applications. The format of any separate electronic submittals (additional submittals such as non-Word attachments, re-submittals, application updates) and Section document shall be in the format: "A-3423-9-description", where "9" stands for the section # (in this case Section 9-Public Notice). Please refrain, as much as possible, from submitting any scanned documents as this file format is extremely large, which uses up too much storage capacity in our database. Please take the time to fill out the header information throughout all submittals as this will identify any loose pages, including the Application Date (date submitted) & Revision number (0 for original, 1, 2, etc.; which will help keep track of subsequent partial update(s) to the original submittal. Do not use special symbols (#, @, etc.) in file names. The footer information should not be modified by the applicant.

## Table of Contents

**Section 1:** **General Facility Information**
**Section 2:** **Tables**
**Section 3:** **Application Summary**
**Section 4:** **Process Flow Sheet**
**Section 5:** **Plot Plan Drawn to Scale**
**Section 6:** **All Calculations**
**Section 7:** **Information Used to Determine Emissions**
**Section 8:** **Map(s)**
**Section 9:** **Proof of Public Notice**
**Section 10:** **Written Description of the Routine Operations of the Facility**
**Section 11:** **Source Determination**
**Section 12:** **PSD Applicability Determination for All Sources & Special Requirements for a PSD Application**
**Section 13:** **Discussion Demonstrating Compliance with Each Applicable State & Federal Regulation**
**Section 14:** **Operational Plan to Mitigate Emissions**
**Section 15:** **Alternative Operating Scenarios**
**Section 16:** **Air Dispersion Modeling**
**Section 17:** **Compliance Test History**
**Section 18:** **Addendum for Streamline Applications (streamline applications only)**
**Section 19:** **Requirements for the Title V (20.2.70 NMAC) Program (Title V applications only)**
**Section 20:** **Other Relevant Information**
**Section 21:** **Addendum for Landfill Applications**
**Section 22:** **Certification Page**

# Table 2-A: Regulated Emission Sources

Unit and stack numbering must correspond throughout the application package. If applying for a NOI under 20.2.73 NMAC, equipment exemptions under 2.72.202 NMAC do not apply.

| Unit Number[1] | Source Description | Make | Model # | Serial # | Manufact-urer's Rated Capacity[3] (Specify Units) | Requested Permitted Capacity[3] (Specify Units) | Date of Manufacture[2] / Date of Construction/ Reconstruction[2] | Controlled by Unit # / Emissions vented to Stack # | Source Classi-fication Code (SCC) | For Each Piece of Equipment, Check One | RICE Ignition Type (CI, SI, 4SLB, 4SRB, 2SLB)[4] | Replacing Unit No. |
|---|---|---|---|---|---|---|---|---|---|---|---|---|
| EP-1 | Emergency Flare (Pilot with auto ignition) | Zeeco Inc. | FL5100 | 31927 | 240.025 MMscf/yr | 240.025 MMscf/yr | 2017 / 2017 | NA / EP-1 | 31000205 | ☐ Existing (unchanged) ☐ To be Removed ☑ New/Additional ☐ Replacement Unit ☐ To Be Modified ☐ To be Replaced | NA | NA |
| 2/3-EP-1 | Emergency Flare (Pilot with auto ignition) | Zeeco Inc. | FL2100 | TBD | 240.025 MMscf/yr | 240.025 MMscf/yr | TBD / TBD | NA / 2/3-EP-1 | 31000202 | ☐ Existing (unchanged) ☐ To be Removed ☑ New/Additional ☐ Replacement Unit ☐ To Be Modified ☐ To be Replaced | NA | NA |
| 2-EP-1 | Emergency Flare (Pilot with auto ignition) | TBD | TBD | TBD | 240.025 MMscf/yr | 240.025 MMscf/yr | TBD / TBD | NA / 2-EP-1 | 31000205 | ☐ Existing (unchanged) ☐ To be Removed ☑ New/Additional ☐ Replacement Unit ☐ To Be Modified ☐ To be Replaced | NA | NA |
| 4-EP-1 | Emergency Flare (Pilot with auto ignition) | Zeeco Inc. | FL2100 | TBD | 240.025 MMscf/yr | 240.025 MMscf/yr | TBD / TBD | NA / 4-EP-1 | 31000202 | ☐ Existing (unchanged) ☐ To be Removed ☑ New/Additional ☐ Replacement Unit ☐ To Be Modified ☐ To be Replaced | NA | NA |
| 3-EP-1 | Emergency Flare (Pilot with auto ignition) | TBD | TBD | TBD | 240.025 MMscf/yr | 240.025 MMscf/yr | TBD / TBD | NA / 3-EP-1 | 31000205 | ☐ Existing (unchanged) ☐ To be Removed ☑ New/Additional ☐ Replacement Unit ☐ To Be Modified ☐ To be Replaced | NA | NA |
| EP-2 | Trim Reboiler | Fabsco Shell & Tube | E-207 | 516-11764-2/HI14-149 | 26.5 MMBtu/hr | 26.5 MMBtu/hr | 2017 / 2017 | NA / EP-2 | 31000404 | ☐ Existing (unchanged) ☐ To be Removed ☑ New/Additional ☐ Replacement Unit ☐ To Be Modified ☐ To be Replaced | NA | NA |
| 2-EP-2 | Trim Reboiler | Fabsco Shell & Tube | E-207 | TBD | 26.5 MMBtu/hr | 26.5 MMBtu/hr | TBD / TBD | NA / 2-EP-2 | 31000404 | ☐ Existing (unchanged) ☐ To be Removed ☑ New/Additional ☐ Replacement Unit ☐ To Be Modified ☐ To be Replaced | NA | NA |
| 3-EP-2 | Trim Reboiler | Fabsco Shell & Tube | E-207 | TBD | 26.5 MMBtu/hr | 26.5 MMBtu/hr | TBD / TBD | NA / 3-EP-2 | 31000404 | ☐ Existing (unchanged) ☐ To be Removed ☑ New/Additional ☐ Replacement Unit ☐ To Be Modified ☐ To be Replaced | NA | NA |
| 4-EP-2 | Trim Reboiler | Fabsco Shell & Tube | E-207 | TBD | 17.22 MMBtu/hr | 17.22 MMBtu/hr | TBD / TBD | NA / 4-EP-2 | 31000404 | ☐ Existing (unchanged) ☐ To be Removed ☑ New/Additional ☐ Replacement Unit ☐ To Be Modified ☐ To be Replaced | NA | NA |
| EP-3A | Amine Reboiler Heater | Patrick | 2BKU30/5A-312/268720020A | TBD | 70.28 MMBtu/hr | 70.28 MMBtu/hr | 2017 / 2017 | NA / EP-3A | 31000404 | ☐ Existing (unchanged) ☐ To be Removed ☑ New/Additional ☐ Replacement Unit ☐ To Be Modified ☐ To be Replaced | NA | NA |
| EP-3B | Amine Reboiler Heater | Patrick | TBD | TBD | 84.77 MMBtu/hr | 84.77 MMBtu/hr | TBD / TBD | NA / EP-3B | 31000404 | ☐ Existing (unchanged) ☐ To be Removed ☑ New/Additional ☐ Replacement Unit ☐ To Be Modified ☐ To be Replaced | NA | NA |
| EP-4 | Glycol Reboiler Heater | Reset Energy | H-2801 | F-9 | 3.9 MMBtu/hr | 3.9 MMBtu/hr | 2017 / 2017 | NA / EP-4 | 31000302 | ☐ Existing (unchanged) ☐ To be Removed ☑ New/Additional ☐ Replacement Unit ☐ To Be Modified ☐ To be Replaced | NA | NA |
| 2-EP-4 | Glycol Reboiler Heater | TBD | TBD | TBD | 3.9 MMBtu/hr | 3.9 MMBtu/hr | TBD / TBD | NA / 2-EP-4 | 31000302 | ☐ Existing (unchanged) ☐ To be Removed ☑ New/Additional ☐ Replacement Unit ☐ To Be Modified ☐ To be Replaced | NA | NA |
| 3-EP-4 | Glycol Reboiler Heater | TBD | TBD | TBD | 3.9 MMBtu/hr | 3.9 MMBtu/hr | TBD / TBD | NA / 3-EP-4 | 31000302 | ☐ Existing (unchanged) ☐ To be Removed ☑ New/Additional ☐ Replacement Unit ☐ To Be Modified ☐ To be Replaced | NA | NA |
| EP-5 | Regen Reboiler Heater | Heatec | HCI5010-40-G | HI16-201 | 9.5 MMBtu/hr | 9.5 MMBtu/hr | 2/2017 / 2017 | NA / EP-2 | 31000404 | ☐ Existing (unchanged) ☐ To be Removed ☑ New/Additional ☐ Replacement Unit ☐ To Be Modified ☐ To be Replaced | NA | NA |
| 2-EP-5 | Regen Reboiler Heater | TBD | TBD | TBD | 9.5 MMBtu/hr | 9.5 MMBtu/hr | TBD / TBD | NA / 2-EP-2 | 31000404 | ☐ Existing (unchanged) ☐ To be Removed ☑ New/Additional ☐ Replacement Unit ☐ To Be Modified ☐ To be Replaced | NA | NA |
| 3-EP-5 | Regen Reboiler Heater | TBD | TBD | TBD | 9.5 MMBtu/hr | 9.5 MMBtu/hr | TBD / TBD | NA / 3-EP-2 | 31000404 | ☐ Existing (unchanged) ☐ To be Removed ☑ New/Additional ☐ Replacement Unit ☐ To Be Modified ☐ To be Replaced | NA | NA |
| EP-6 | Stabilizer Heater | Phoenix | PX-180 | 17169 | 23.4 MMBtu/hr | 23.4 MMBtu/hr | 2017 / 2017 | NA / EP-6 | 31000404 | ☐ Existing (unchanged) ☐ To be Removed ☑ New/Additional ☐ Replacement Unit ☐ To Be Modified ☐ To be Replaced | NA | NA |
| 2-EP-6 | Stabilizer Heater | TBD | TBD | TBD | 23.4 MMBtu/hr | 23.4 MMBtu/hr | TBD / TBD | NA / 2-EP-6 | 31000404 | ☐ Existing (unchanged) ☐ To be Removed ☑ New/Additional ☐ Replacement Unit ☐ To Be Modified ☐ To be Replaced | NA | NA |

| Unit Number[1] | Source Description | Make | Model # | Serial # | Manufact-urer's Rated Capacity[3] (Specify Units) | Requested Permitted Capacity[3] (Specify Units) | Date of Manufacture[2] / Date of Construction/ Reconstruction[2] | Controlled by Unit # / Emissions vented to Stack # | Source Classi-fication Code (SCC) | For Each Piece of Equipment, Check One | RICE Ignition Type (CI, SI, 4SLB, 4SRB, 2SLB)[4] | Replacing Unit No. |
|---|---|---|---|---|---|---|---|---|---|---|---|---|
| EP-7 | Glycol Dehydrator Still Vent | Reset Energy | T-2707 | 153 | 240 MMscf/d | 240 MMscf/d | 2017<br>2017 | EP-9<br>EP-9 | 31000301 | ☐ Existing (unchanged) ☐ To be Removed<br>☑ New/Additional ☐ Replacement Unit<br>☐ To Be Modified ☐ To be Replaced | NA | NA |
| 2-EP-7 | Glycol Dehydrator Still Vent | TBD | TBD | TBD | 240 MMscf/d | 240 MMscf/d | TBD<br>TBD | EP-9<br>EP-9 | 31000301 | ☐ Existing (unchanged) ☐ To be Removed<br>☑ New/Additional ☐ Replacement Unit<br>☐ To Be Modified ☐ To be Replaced | NA | NA |
| 3-EP-7 | Glycol Dehydrator Still Vent | TBD | TBD | TBD | 240 MMscf/d | 240 MMscf/d | TBD<br>TBD | EP-9<br>EP-9 | 31000301 | ☐ Existing (unchanged) ☐ To be Removed<br>☑ New/Additional ☐ Replacement Unit<br>☐ To Be Modified ☐ To be Replaced | NA | NA |
| EP-8 | Amine Still Vent | PBP Fabrication | V-5520 | 493 | 245 MMscf/d | 245 MMscf/d | 2017<br>2017 | EP-9<br>EP-9 | 31000305 | ☐ Existing (unchanged) ☐ To be Removed<br>☑ New/Additional ☐ Replacement Unit<br>☐ To Be Modified ☐ To be Replaced | NA | NA |
| 2-EP-8 | Amine Still Vent | TBD | TBD | TBD | 245 MMscf/d | 245 MMscf/d | 2017<br>2017 | EP-9<br>EP-9 | 31000305 | ☐ Existing (unchanged) ☐ To be Removed<br>☑ New/Additional ☐ Replacement Unit<br>☐ To Be Modified ☐ To be Replaced | NA | NA |
| 3-EP-8 | Amine Still Vent | TBD | TBD | TBD | 245 MMscf/d | 245 MMscf/d | 2017<br>2017 | EP-9<br>EP-9 | 31000305 | ☐ Existing (unchanged) ☐ To be Removed<br>☑ New/Additional ☐ Replacement Unit<br>☐ To Be Modified ☐ To be Replaced | NA | NA |
| EP-9 | Thermal Oxidizer | Zeeco Inc | TO-55 | 32339 | 71 MMBtu/hr | 71 MMBtu/hr | 2017<br>2017 | NA<br>EP-9 | 31000209 | ☐ Existing (unchanged) ☐ To be Removed<br>☑ New/Additional ☐ Replacement Unit<br>☐ To Be Modified ☐ To be Replaced | NA | NA |
| GEN-1 | Generator | GENERAC | 2506C-E15TAG3 | TBD | 762 hp | 762 hp | 2022<br>2022 | NA<br>GEN-1 | 20100202 | ☐ Existing (unchanged) ☐ To be Removed<br>☑ New/Additional ☐ Replacement Unit<br>☐ To Be Modified ☐ To be Replaced | CI | NA |
| GEN-2 | Generator | GENERAC | TBD | 3014145933 | 268 hp | 268 hp | TBD<br>TBD | NA<br>GEN-2 | 20100202 | ☐ Existing (unchanged) ☐ To be Removed<br>☑ New/Additional ☐ Replacement Unit<br>☐ To Be Modified ☐ To be Replaced | CI | NA |
| GEN-3 | Generator | TBD | TBD | TBD | 499 hp | 499 hp | TBD<br>TBD | NA<br>GEN-3 | 20100202 | ☐ Existing (unchanged) ☐ To be Removed<br>☑ New/Additional ☐ Replacement Unit<br>☐ To Be Modified ☐ To be Replaced | CI | NA |
| GEN-4 | Generator | TBD | TBD | TBD | 499 hp | 499 hp | TBD<br>TBD | NA<br>GEN-4 | 20100202 | ☐ Existing (unchanged) ☐ To be Removed<br>☑ New/Additional ☐ Replacement Unit<br>☐ To Be Modified ☐ To be Replaced | CI | NA |
| GEN-5 | Generator | TBD | TBD | TBD | 499 hp | 499 hp | TBD<br>TBD | NA<br>GEN-5 | 20100202 | ☐ Existing (unchanged) ☐ To be Removed<br>☑ New/Additional ☐ Replacement Unit<br>☐ To Be Modified ☐ To be Replaced | CI | NA |
| GEN-6 | Generator | TBD | TBD | TBD | 499 hp | 499 hp | TBD<br>TBD | NA<br>GEN-6 | 20100202 | ☐ Existing (unchanged) ☐ To be Removed<br>☑ New/Additional ☐ Replacement Unit<br>☐ To Be Modified ☐ To be Replaced | CI | NA |
| GEN-7 | Generator | TBD | TBD | TBD | 499 hp | 499 hp | TBD<br>TBD | NA<br>GEN-7 | 20100202 | ☐ Existing (unchanged) ☐ To be Removed<br>☑ New/Additional ☐ Replacement Unit<br>☐ To Be Modified ☐ To be Replaced | CI | NA |
| GEN-8 | Generator | TBD | TBD | TBD | 499 hp | 499 hp | TBD<br>TBD | NA<br>GEN-8 | 20100202 | ☐ Existing (unchanged) ☐ To be Removed<br>☑ New/Additional ☐ Replacement Unit<br>☐ To Be Modified ☐ To be Replaced | CI | NA |
| GEN-9 | Generator | TBD | TBD | TBD | 499 hp | 499 hp | TBD<br>TBD | NA<br>GEN-9 | 20100202 | ☐ Existing (unchanged) ☐ To be Removed<br>☑ New/Additional ☐ Replacement Unit<br>☐ To Be Modified ☐ To be Replaced | CI | NA |
| GEN-10 | Generator | TBD | TBD | TBD | 499 hp | 499 hp | TBD<br>TBD | NA<br>GEN-10 | 20100202 | ☐ Existing (unchanged) ☐ To be Removed<br>☑ New/Additional ☐ Replacement Unit<br>☐ To Be Modified ☐ To be Replaced | CI | NA |
| GEN-11 | Generator | TBD | TBD | TBD | 499 hp | 499 hp | TBD<br>TBD | NA<br>GEN-11 | 20100202 | ☐ Existing (unchanged) ☐ To be Removed<br>☑ New/Additional ☐ Replacement Unit<br>☐ To Be Modified ☐ To be Replaced | CI | NA |
| GEN-12 | Generator | TBD | TBD | TBD | 499 hp | 499 hp | TBD<br>TBD | NA<br>GEN-12 | 20100202 | ☐ Existing (unchanged) ☐ To be Removed<br>☑ New/Additional ☐ Replacement Unit<br>☐ To Be Modified ☐ To be Replaced | CI | NA |
| SSM | Startup, Shutdown, Malfunction Emissions | TBD | TBD | TBD | NA | NA | TBD<br>TBD | N/A<br>N/A | 31088811 | ☐ Existing (unchanged) ☐ To be Removed<br>☑ New/Additional ☐ Replacement Unit<br>☐ To Be Modified ☐ To be Replaced | NA | NA |
| COMB-1 | Combustor | Zeeco Inc | VCU-7.5.40 Flare System | 31974-001 | 12.74 MMscf/yr | 12.74 MMscf/yr | 2017<br>2017 | NA<br>COMB-1 | 31000209 | ☐ Existing (unchanged) ☐ To be Removed<br>☑ New/Additional ☐ Replacement Unit<br>☐ To Be Modified ☐ To be Replaced | NA | NA |
| LOAD | Condensate Loadout Emissions | TBD | TBD | TBD | 2,920,000 bbl/yr | 2,920,000 bbl/yr | TBD<br>TBD | N/A<br>EP-9 | 40600132 | ☐ Existing (unchanged) ☐ To be Removed<br>☑ New/Additional ☐ Replacement Unit<br>☐ To Be Modified ☐ To be Replaced | NA | NA |

| Unit Number[1] | Source Description | Make | Model # | Serial # | Manufact-urer's Rated Capacity[3] (Specify Units) | Requested Permitted Capacity[3] (Specify Units) | Date of Manufacture[2] / Date of Construction/ Reconstruction[2] | Controlled by Unit # / Emissions vented to Stack # | Source Classi-fication Code (SCC) | For Each Piece of Equipment, Check One | RICE Ignition Type (CI, SI, 4SLB, 4SRB, 2SLB)[4] | Replacing Unit No. |
|---|---|---|---|---|---|---|---|---|---|---|---|---|
| HAUL | Haul Road Emissions | TBD | TBD | TBD | 4380 trips/yr | 4380 trips/yr | TBD<br>TBD | N/A<br>N/A | 31088811 | ☐ Existing (unchanged) ☐ To be Removed<br>☑ New/Additional ☐ Replacement Unit<br>☐ To Be Modified ☐ To be Replaced | NA | NA |
| FUG | Fugitive Emissions | TBD | TBD | TBD | NA | NA | TBD<br>TBD | N/A<br>N/A | 31000220 | ☐ Existing (unchanged) ☐ To be Removed<br>☑ New/Additional ☐ Replacement Unit<br>☐ To Be Modified ☐ To be Replaced | NA | NA |
| T-1 | Condensate Storage Tank | Tank &Vessel Boilers LP | NA | 201723 | 1000 bbl | 1000 bbl | 2017<br>2017 | COMB-1<br>COMB-1 | 40400311 | ☐ Existing (unchanged) ☐ To be Removed<br>☑ New/Additional ☐ Replacement Unit<br>☐ To Be Modified ☐ To be Replaced | NA | NA |
| T-2 | Condensate Storage Tank | Tank &Vessel Boilers LP | NA | 201724 | 1000 bbl | 1000 bbl | 2017<br>2017 | COMB-1<br>COMB-1 | 40400311 | ☐ Existing (unchanged) ☐ To be Removed<br>☑ New/Additional ☐ Replacement Unit<br>☐ To Be Modified ☐ To be Replaced | NA | NA |
| T-3 | Condensate Storage Tank | Tank &Vessel Boilers LP | NA | 201720 | 1000 bbl | 1000 bbl | 2017<br>2017 | COMB-1<br>COMB-1 | 40400311 | ☐ Existing (unchanged) ☐ To be Removed<br>☑ New/Additional ☐ Replacement Unit<br>☐ To Be Modified ☐ To be Replaced | NA | NA |
| T-4 | Condensate Storage Tank | Tank &Vessel Boilers LP | NA | 201721 | 1000 bbl | 1000 bbl | 2017<br>2017 | COMB-1<br>COMB-1 | 40400311 | ☐ Existing (unchanged) ☐ To be Removed<br>☑ New/Additional ☐ Replacement Unit<br>☐ To Be Modified ☐ To be Replaced | NA | NA |
| T-5 | Condensate Storage Tank | Tank &Vessel Boilers LP | NA | 201722 | 1000 bbl | 1000 bbl | 2017<br>2017 | COMB-1<br>COMB-1 | 40400311 | ☐ Existing (unchanged) ☐ To be Removed<br>☑ New/Additional ☐ Replacement Unit<br>☐ To Be Modified ☐ To be Replaced | NA | NA |
| T-6 | Produced Water Tank | Palmer | NA | ST-1711323 | 400 bbl | 400 bbl | 8/2017<br>2017 | NA<br>NA | 40400315 | ☐ Existing (unchanged) ☐ To be Removed<br>☑ New/Additional ☐ Replacement Unit<br>☐ To Be Modified ☐ To be Replaced | NA | NA |
| D-1 | Electric Driven Residue Compressor | Ariel | KBZ/6 | F54680 | 60 MMscf/d | 60 MMscf/d | 9/2017<br>2017 | NA<br>NA | 31000203 | ☐ Existing (unchanged) ☐ To be Removed<br>☑ New/Additional ☐ Replacement Unit<br>☐ To Be Modified ☐ To be Replaced | NA | NA |
| D-2 | Electric Driven Residue Compressor | Ariel | KBZ/6 | F54701 | 60 MMscf/d | 60 MMscf/d | 9/2017<br>2017 | NA<br>NA | 31000203 | ☐ Existing (unchanged) ☐ To be Removed<br>☑ New/Additional ☐ Replacement Unit<br>☐ To Be Modified ☐ To be Replaced | NA | NA |
| D-3 | Electric Driven Residue Compressor | Ariel | KBZ/6 | F54720 | 60 MMscf/d | 60 MMscf/d | 9/2017<br>2017 | NA<br>NA | 31000203 | ☐ Existing (unchanged) ☐ To be Removed<br>☑ New/Additional ☐ Replacement Unit<br>☐ To Be Modified ☐ To be Replaced | NA | NA |
| D-4 | Electric Driven Residue Compressor | Ariel | KBZ/6 | F54720 | 60 MMscf/d | 60 MMscf/d | 9/2017<br>2017 | NA<br>NA | 31000203 | ☐ Existing (unchanged) ☐ To be Removed<br>☑ New/Additional ☐ Replacement Unit<br>☐ To Be Modified ☐ To be Replaced | NA | NA |
| D-5 | Electric Driven Refrigeration Compressor | GEA | XCR-XC26555-18 | XC0507 | 4500 hp | 4500 hp | 2017<br>TBD | NA<br>NA | 31000203 | ☐ Existing (unchanged) ☐ To be Removed<br>☑ New/Additional ☐ Replacement Unit<br>☐ To Be Modified ☐ To be Replaced | NA | NA |
| D-6 | Electric Driven Refrigeration Compressor | GEA | XCR-XC26555-18 | XC0508 | 4500 hp | 4500 hp | 2017<br>TBD | NA<br>NA | 31000203 | ☐ Existing (unchanged) ☐ To be Removed<br>☑ New/Additional ☐ Replacement Unit<br>☐ To Be Modified ☐ To be Replaced | NA | NA |
| D-7 | Electric Driven Refrigeration Compressor | GEA | XCR-XC26555-18 | XC0510 | 4500 hp | 4500 hp | 2017<br>TBD | NA<br>NA | 31000203 | ☐ Existing (unchanged) ☐ To be Removed<br>☑ New/Additional ☐ Replacement Unit<br>☐ To Be Modified ☐ To be Replaced | NA | NA |
| 2-D-1 | Electric Driven Residue Compressor | Ariel | KBZ4 | TBD | TBD | TBD | 2012<br>TBD | NA<br>NA | 31000203 | ☐ Existing (unchanged) ☐ To be Removed<br>☑ New/Additional ☐ Replacement Unit<br>☐ To Be Modified ☐ To be Replaced | NA | NA |
| 2-D-2 | Electric Driven Residue Compressor | Ariel | KBZ4 | TBD | TBD | TBD | 2012<br>TBD | NA<br>NA | 31000203 | ☐ Existing (unchanged) ☐ To be Removed<br>☑ New/Additional ☐ Replacement Unit<br>☐ To Be Modified ☐ To be Replaced | NA | NA |
| 2-D-3 | Electric Driven Residue Compressor | Ariel | KBZ4 | TBD | TBD | TBD | 2012<br>TBD | NA<br>NA | 31000203 | ☐ Existing (unchanged) ☐ To be Removed<br>☑ New/Additional ☐ Replacement Unit<br>☐ To Be Modified ☐ To be Replaced | NA | NA |
| 2-D-4 | Electric Driven Residue Compressor | Ariel | KBZ4 | TBD | TBD | TBD | 2012<br>TBD | NA<br>NA | 31000203 | ☐ Existing (unchanged) ☐ To be Removed<br>☑ New/Additional ☐ Replacement Unit<br>☐ To Be Modified ☐ To be Replaced | NA | NA |
| 2-D-5 | Electric Refrigeration Compressor | Frick | RWF546E | TBD | TBD | TBD | 2012<br>TBD | NA<br>NA | 31000203 | ☐ Existing (unchanged) ☐ To be Removed<br>☑ New/Additional ☐ Replacement Unit<br>☐ To Be Modified ☐ To be Replaced | NA | NA |

| Unit Number[1] | Source Description | Make | Model # | Serial # | Manufact-urer's Rated Capacity[3] (Specify Units) | Requested Permitted Capacity[3] (Specify Units) | Date of Manufacture[2] / Date of Construction/ Reconstruction[2] | Controlled by Unit # / Emissions vented to Stack # | Source Classi-fication Code (SCC) | For Each Piece of Equipment, Check One | RICE Ignition Type (CI, SI, 4SLB, 4SRB, 2SLB)[4] | Replacing Unit No. |
|---|---|---|---|---|---|---|---|---|---|---|---|---|
| 2-D-6 | Electric Refrigeration Compressor | Frick | RWF546E | TBD | TBD | TBD | 2012<br>TBD | NA<br>NA | 31000203 | ☐ Existing (unchanged) ☐ To be Removed<br>☑ New/Additional ☐ Replacement Unit<br>☐ To Be Modified ☐ To be Replaced | NA | NA |
| 2-D-7 | Electric Refrigeration Compressor | Frick | RWF546E | TBD | TBD | TBD | 2012<br>TBD | NA<br>NA | 31000203 | ☐ Existing (unchanged) ☐ To be Removed<br>☑ New/Additional ☐ Replacement Unit<br>☐ To Be Modified ☐ To be Replaced | NA | NA |
| 2-D-8 | Electric Refrigeration Compressor | Frick | RWF546E | TBD | TBD | TBD | 2012<br>TBD | NA<br>NA | 31000203 | ☐ Existing (unchanged) ☐ To be Removed<br>☑ New/Additional ☐ Replacement Unit<br>☐ To Be Modified ☐ To be Replaced | NA | NA |
| 3-D-1 | Electric Driven Residue Compressor | Ariel | KBZ4 | TBD | 60 MMscf/d | 60 MMscf/d | 2023<br>TBD | NA<br>NA | 31000203 | ☐ Existing (unchanged) ☐ To be Removed<br>☑ New/Additional ☐ Replacement Unit<br>☐ To Be Modified ☐ To be Replaced | NA | NA |
| 3-D-2 | Electric Driven Residue Compressor | Ariel | KBZ4 | TBD | 60 MMscf/d | 60 MMscf/d | 2023<br>TBD | NA<br>NA | 31000203 | ☐ Existing (unchanged) ☐ To be Removed<br>☑ New/Additional ☐ Replacement Unit<br>☐ To Be Modified ☐ To be Replaced | NA | NA |
| 3-D-3 | Electric Driven Residue Compressor | Ariel | KBZ4 | TBD | 60 MMscf/d | 60 MMscf/d | 2023<br>TBD | NA<br>NA | 31000203 | ☐ Existing (unchanged) ☐ To be Removed<br>☑ New/Additional ☐ Replacement Unit<br>☐ To Be Modified ☐ To be Replaced | NA | NA |
| 3-D-4 | Electric Driven Residue Compressor | Ariel | KBZ4 | TBD | 60 MMscf/d | 60 MMscf/d | 2023<br>TBD | NA<br>NA | 31000203 | ☐ Existing (unchanged) ☐ To be Removed<br>☑ New/Additional ☐ Replacement Unit<br>☐ To Be Modified ☐ To be Replaced | NA | NA |
| 3-D-5 | Electric Driven Refrigeration Compressor | Frick | RWF546E | TBD | TBD | TBD | 2023<br>TBD | NA<br>NA | 31000203 | ☐ Existing (unchanged) ☐ To be Removed<br>☑ New/Additional ☐ Replacement Unit<br>☐ To Be Modified ☐ To be Replaced | NA | NA |
| 3-D-6 | Electric Driven Refrigeration Compressor | Frick | RWF546E | TBD | TBD | TBD | 2023<br>TBD | NA<br>NA | 31000203 | ☐ Existing (unchanged) ☐ To be Removed<br>☑ New/Additional ☐ Replacement Unit<br>☐ To Be Modified ☐ To be Replaced | NA | NA |
| 3-D-7 | Electric Driven Refrigeration Compressor | Frick | RWF546E | TBD | TBD | TBD | 2023<br>TBD | NA<br>NA | 31000203 | ☐ Existing (unchanged) ☐ To be Removed<br>☑ New/Additional ☐ Replacement Unit<br>☐ To Be Modified ☐ To be Replaced | NA | NA |
| 3-D-8 | Electric Driven Refrigeration Compressor | Frick | RWF546E | TBD | TBD | TBD | 2023<br>TBD | NA<br>NA | 31000203 | ☐ Existing (unchanged) ☐ To be Removed<br>☑ New/Additional ☐ Replacement Unit<br>☐ To Be Modified ☐ To be Replaced | NA | NA |

[2] Specify dates required to determine regulatory applicability.

[3] To properly account for power conversion efficiencies, generator set rated capacity shall be reported as the rated capacity of the engine in horsepower, not the kilowatt capacity of the generator set.

[4] "4SLB" means four stroke lean burn engine, "4SRB" means four stroke rich burn engine, "2SLB" means two stroke lean burn engine, "CI" means compression ignition, and "SI" means spark ignition

## Table 2-B: Insignificant Activities[1] (20.2.70 NMAC) OR Exempted Equipment (20.2.72 NMAC)

All 20.2.70 NMAC (Title V) applications must list all Insignificant Activities in this table. All 20.2.72 NMAC applications must list Exempted Equipment in this table. If equipment listed on this table is exempt under 20.2.72.202.B.2, include emissions calculations and emissions totals for 202.B.2 "similar functions" units, operations, and activities in Section 6, Calculations. Equipment and activities exempted under 20.2.72.202 NMAC may not necessarily be Insignificant under 20.2.70 NMAC (and vice versa). Unit & stack numbering must be consistent throughout the application package. Per Exemptions Policy 02-012.00 (see http://www.env.nm.gov/aqb/permit/aqb_pol.html ), 20.2.72.202.B NMAC Exemptions do not apply, but 20.2.72.202.A NMAC exemptions do apply to NOI facilities under 20.2.73 NMAC. List 20.2.72.301.D.4 NMAC Auxiliary Equipment for Streamline applications in Table 2-A. The List of Insignificant Activities (for TV) can be found online at https://www.env.nm.gov/wp-content/uploads/sites/2/2017/10/InsignificantListTitleV.pdf. TV sources may elect to enter both TV Insignificant Activities and Part 72 Exemptions on this form.

| Unit Number | Source Description | Manufacturer | Model No. / Serial No. | Max Capacity / Capacity Units | List Specific 20.2.72.202 NMAC Exemption (e.g. 20.2.72.202.B.2) / Insignificant Activity citation (e.g. IA List Item #1.a) | Date of Manufacture /Reconstruction[2] / Date of Installation /Construction[2] | For Each Piece of Equipment, Check One |
|---|---|---|---|---|---|---|---|
| T-7 | Used Oil/Slop Oil/Skid Runoff | N/A | N/A / N/A | 400 / bbl | 20.72.202.B(2)(a) NMAC | 2020 / TBD | ☐ Existing (unchanged) ☐ To be Removed ☑ New/Additional ☐ Replacement Unit ☐ To Be Modified ☐ To be Replaced |
| T-8 | Used Oil/Slop Oil/Skid Runoff | N/A | N/A / N/A | 400 / bbl | 20.72.202.B(2)(a) NMAC | 2020 / TBD | ☐ Existing (unchanged) ☐ To be Removed ☑ New/Additional ☐ Replacement Unit ☐ To Be Modified ☐ To be Replaced |
| LOAD-2 | Produced Water Loading | N/A | N/A / N/A | 1,032,064 / gal/yr | 20.72.202.B(2) NMAC | TBD / TBD | ☐ Existing (unchanged) ☐ To be Removed ☑ New/Additional ☐ Replacement Unit ☐ To Be Modified ☐ To be Replaced |
| T-9 | Methanol Tank | N/A | N/A / N/A | 1,000 / gallons | 20.72.202.B(2) NMAC | TBD / 2020 | ☐ Existing (unchanged) ☐ To be Removed ☑ New/Additional ☐ Replacement Unit ☐ To Be Modified ☐ To be Replaced |
| T-10 | Methanol Tank | N/A | N/A / N/A | 1,500 / gallons | 20.72.202.B(2) NMAC | TBD / 2020 | ☐ Existing (unchanged) ☐ To be Removed ☑ New/Additional ☐ Replacement Unit ☐ To Be Modified ☐ To be Replaced |
| T-11 | Diesel Tote | N/A | N/A / N/A | 220 / gallons | 20.72.202.B(2)(a) NMAC | TBD / TBD | ☐ Existing (unchanged) ☐ To be Removed ☑ New/Additional ☐ Replacement Unit ☐ To Be Modified ☐ To be Replaced |
| T-12 | Diesel Tote | N/A | N/A / N/A | 220 / gallons | 20.72.202.B(2)(a) NMAC | TBD / TBD | ☐ Existing (unchanged) ☐ To be Removed ☑ New/Additional ☐ Replacement Unit ☐ To Be Modified ☐ To be Replaced |
| T-13 | Diesel Tote | N/A | N/A / N/A | 300 / gallons | 20.72.202.B(2)(a) NMAC | TBD / TBD | ☐ Existing (unchanged) ☐ To be Removed ☑ New/Additional ☐ Replacement Unit ☐ To Be Modified ☐ To be Replaced |
| MSSM-Glycol | Glycol Dehydration Unit - Replacement of Glycol Solution | N/A | N/A / N/A | N/A / N/A | 20.72.202.B(2)(a) NMAC | N/A / N/A | ☐ Existing (unchanged) ☐ To be Removed ☑ New/Additional ☐ Replacement Unit ☐ To Be Modified ☐ To be Replaced |
| MSSM-Amine | Amine Unit - Replacement of Amine Solution | N/A | N/A / N/A | N/A / N/A | 20.72.202.B(2)(a) NMAC | N/A / N/A | ☐ Existing (unchanged) ☐ To be Removed ☑ New/Additional ☐ Replacement Unit ☐ To Be Modified ☐ To be Replaced |
| MSSM-Aerosol | Aerosol Lubricants | N/A | N/A / N/A | N/A / N/A | 20.72.202.A(2) NMAC | N/A / N/A | ☐ Existing (unchanged) ☐ To be Removed ☑ New/Additional ☐ Replacement Unit ☐ To Be Modified ☐ To be Replaced |
| MSSM-Piping | Piping Components | N/A | N/A / N/A | N/A / N/A | 20.72.202.A(12) NMAC | N/A / N/A | ☐ Existing (unchanged) ☐ To be Removed ☑ New/Additional ☐ Replacement Unit ☐ To Be Modified ☐ To be Replaced |
| MSSM-Cal | Use of Calibration Gases | N/A | N/A / N/A | N/A / N/A | 20.72.202.A(10) NMAC | N/A / N/A | ☐ Existing (unchanged) ☐ To be Removed ☑ New/Additional ☐ Replacement Unit ☐ To Be Modified ☐ To be Replaced |
| MSSM-Misc | Miscellanous Maintenance Activities | N/A | N/A / N/A | N/A / N/A | 20.72.202.A(2) NMAC | N/A / N/A | ☐ Existing (unchanged) ☐ To be Removed ☑ New/Additional ☐ Replacement Unit ☐ To Be Modified ☐ To be Replaced |

[1] Insignificant activities exempted due to size or production rate are defined in 20.2.70.300.D.6, 20.2.70.7.Q NMAC, and the NMED/AQB List of Insignificant Activities, dated September 12, 2008. Emissions from these insignificant activities do not need to be reported, unless specifically requested.

[2] Specify date(s) required to determine regulatory applicability.

# Table 2-C: Emissions Control Equipment

Unit and stack numbering must correspond throughout the application package. Only list control equipment for TAPs if the TAP's maximum uncontrolled emissions rate is over its respective threshold as listed in 20.2.72 NMAC, Subpart V, Tables A and B. In accordance with 20.2.72.203.A(3) and (8) NMAC, 20.2.70.300.D(2)(b) and (e) NMAC, and 20.2.73.200.B(7) NMAC, the permittee shall report all control devices and list each pollutant controlled by the control device regardless if the applicant takes credit for the reduction in emissions.

| Control Equipment Unit No. | Control Equipment Description | Date Installed | Controlled Pollutant(s) | Controlling Emissions for Unit Number(s)[1] | Efficiency (% Control by Weight) | Method used to Estimate Efficiency |
|---|---|---|---|---|---|---|
| BTEX-1 | Condenser | 2017 | VOC, HAP | EP-7, 2-EP-7, 3-EP-7 | 98% | Engineering Estimate |
| COMB-1 | Combustor | 2017 | VOC, HAP, $H_2S$ | T-1, T-2, T-3, T-4, T-2 | 92% | Manufacturer Spec |
| EP-9 | Thermal Oxidizer | 2017 | VOC, HAP, H2S | EP-8, 2-EP-8, 3-EP-8, EP-7, 2-EP-7, 3-EP-7 | 99.9% | Manufacturer Spec |
| EP-1 | SSM Flare | 2017 | VOC, HAP, $H_2S$ | Train 1 inlet gas and residue gas | 98% | Manufacturer Spec |
| 2-EP-1 | SSM Flare | TBD | VOC, HAP, $H_2S$ | Train 2 inlet gas and residue gas | 98% | Manufacturer Spec |
| 3-EP-1 | SSM Flare | TBD | VOC, HAP, $H_2S$ | Train 3 inlet gas and residue gas | 98% | Manufacturer Spec |
| | | | | | | |
| | | | | | | |
| | | | | | | |
| | | | | | | |
| | | | | | | |
| | | | | | | |
| | | | | | | |
| | | | | | | |
| | | | | | | |
| | | | | | | |
| | | | | | | |
| | | | | | | |
| | | | | | | |
| | | | | | | |
| | | | | | | |
| | | | | | | |
| | | | | | | |
| | | | | | | |
| | | | | | | |

[1] List each control device on a separate line. For each control device, list all emission units controlled by the control device.

# Table 2-D: Maximum Emissions (under normal operating conditions)

☐ **This Table was intentionally left blank because it would be identical to Table 2-E.**

Maximum Emissions are the emissions at maximum capacity and prior to (in the absence of) pollution control, emission-reducing process equipment, or any other emission reduction. Calculate the hourly emissions using the worst case hourly emissions for each pollutant. For each pollutant, calculate the annual emissions as if the facility were operating at maximum plant capacity without pollution controls for 8760 hours per year, unless otherwise approved by the Department. List Hazardous Air Pollutants (HAP) & Toxic Air Pollutants (TAPs) in Table 2-I. Unit & stack numbering must be consistent throughout the application package. Fill all cells in this table with the emission numbers or a "-" symbol. A "-" symbol indicates that emissions of this pollutant are not expected. Numbers shall be expressed to at least 2 decimal points (e.g. 0.41, 1.41, or 1.41E-4).

| Unit No. | NOx | | CO | | VOC | | SOx | | PM[1] | | PM10[1] | | PM2.5[1] | | $H_2S$ | | Lead | |
|---|---|---|---|---|---|---|---|---|---|---|---|---|---|---|---|---|---|---|
| | lb/hr | ton/yr | lb/hr | ton/yr | lb/hr | ton/yr | lb/hr | ton/yr | lb/hr | ton/yr | lb/hr | ton/yr | lb/hr | ton/yr | lb/hr | ton/yr | lb/hr | ton/yr |
| EP-2 | 2.60 | 11.38 | 2.18 | 9.56 | 0.14 | 0.63 | 0.022 | 0.10 | 0.20 | 0.86 | 0.20 | 0.86 | 0.20 | 0.86 | - | - | - | - |
| 2-EP-2 | 0.84 | 3.68 | 2.18 | 9.56 | 0.14 | 0.63 | 0.022 | 0.10 | 0.20 | 0.86 | 0.20 | 0.86 | 0.20 | 0.86 | - | - | - | - |
| 3-EP-2 | 0.84 | 3.68 | 2.18 | 9.56 | 0.14 | 0.63 | 0.022 | 0.10 | 0.20 | 0.86 | 0.20 | 0.86 | 0.20 | 0.86 | - | - | - | - |
| EP-3A | 2.23 | 9.77 | 4.53 | 19.83 | 0.38 | 1.66 | 0.06 | 0.26 | 0.52 | 2.29 | 0.52 | 2.29 | 0.52 | 2.29 | - | - | - | - |
| EP-3B | 0.34 | 1.49 | 3.48 | 15.22 | 1.61 | 7.05 | 0.07 | 0.31 | 1.10 | 4.83 | 1.10 | 4.83 | 1.10 | 4.83 | - | - | - | - |
| EP-4 | 0.38 | 1.67 | 0.32 | 1.41 | 0.021 | 0.092 | 0.0032 | 0.014 | 0.029 | 0.13 | 0.029 | 0.13 | 0.029 | 0.13 | - | - | - | - |
| 2-EP-4 | 0.38 | 1.67 | 0.32 | 1.41 | 0.021 | 0.092 | 0.0032 | 0.014 | 0.029 | 0.13 | 0.029 | 0.13 | 0.029 | 0.13 | - | - | - | - |
| 3-EP-4 | 0.38 | 1.67 | 0.32 | 1.41 | 0.021 | 0.092 | 0.0032 | 0.014 | 0.029 | 0.13 | 0.029 | 0.13 | 0.029 | 0.13 | - | - | - | - |
| EP-5 | 0.93 | 4.08 | 0.78 | 3.43 | 0.051 | 0.22 | 0.008 | 0.035 | 0.071 | 0.31 | 0.071 | 0.31 | 0.071 | 0.31 | - | - | - | - |
| 2-EP-5 | 0.93 | 4.08 | 0.78 | 3.43 | 0.051 | 0.22 | 0.008 | 0.035 | 0.071 | 0.31 | 0.071 | 0.31 | 0.071 | 0.31 | - | - | - | - |
| 3-EP-5 | 0.93 | 4.08 | 0.78 | 3.43 | 0.051 | 0.22 | 0.008 | 0.035 | 0.071 | 0.31 | 0.071 | 0.31 | 0.071 | 0.31 | - | - | - | - |
| EP-6 | 2.29 | 10.05 | 1.93 | 8.44 | 0.126 | 0.55 | 0.019 | 0.09 | 0.17 | 0.76 | 0.17 | 0.76 | 0.17 | 0.76 | - | - | - | - |
| 2-EP-6 | 2.29 | 10.05 | 1.93 | 8.44 | 0.126 | 0.55 | 0.019 | 0.09 | 0.17 | 0.76 | 0.17 | 0.76 | 0.17 | 0.76 | - | - | - | - |
| EP-7 | - | - | - | - | 102.15 | 447.40 | - | - | - | - | - | - | - | - | 2.15E-05 | 9.42E-05 | - | - |
| 2-EP-7 | - | - | - | - | 102.15 | 447.40 | - | - | - | - | - | - | - | - | 2.15E-05 | 9.42E-05 | - | - |
| 3-EP-7 | - | - | - | - | 102.15 | 447.40 | - | - | - | - | - | - | - | - | 2.15E-05 | 9.42E-05 | - | - |
| EP-8 | - | - | - | - | 74.67 | 327.04 | - | - | - | - | - | - | - | - | 4.72 | 20.68 | - | - |
| 2-EP-8 | - | - | - | - | 74.67 | 327.04 | - | - | - | - | - | - | - | - | 4.72 | 20.68 | - | - |
| 3-EP-8 | - | - | - | - | 74.67 | 327.04 | - | - | - | - | - | - | - | - | 4.72 | 20.68 | - | - |
| EP-9 | No emissions from this unit in an uncontrolled scenario | | | | | | | | | | | | | | | | - | - |
| EP-1 | 0.22 | 0.96 | 0.44 | 1.91 | - | - | 0.01 | 0.04 | - | - | - | - | - | - | 2.65E-05 | 1.16E-04 | - | - |
| 2-EP-1 | 0.17 | 0.72 | 0.33 | 1.45 | - | - | 0.0082 | 0.036 | - | - | - | - | - | - | 2.00E-05 | 8.76E-05 | - | - |
| 3-EP-1 | 0.03 | 0.14 | 0.065 | 0.28 | - | - | 0.0016 | 0.0071 | - | - | - | - | - | - | 1.40E-06 | 6.11E-06 | - | - |
| T-1 | - | - | - | - | 32.12 | 16.87 | - | - | - | - | - | - | - | - | 0.0038 | 0.0023 | | |
| T-2 | - | - | - | - | 32.12 | 16.87 | - | - | - | - | - | - | - | - | 0.0038 | 0.0023 | - | - |
| T-3 | - | - | - | - | 32.12 | 16.87 | - | - | - | - | - | - | - | - | 0.0038 | 0.0023 | - | - |
| T-4 | - | - | - | - | 32.12 | 16.87 | - | - | - | - | - | - | - | - | 0.0038 | 0.0023 | - | - |
| GEN-1 | 5.75 | 1.44 | 0.79 | 0.20 | 1.69 | 0.42 | 1.77 | 0.44 | 0.034 | 0.0084 | 0.034 | 0.0084 | 0.034 | 0.0084 | - | - | - | - |
| GEN-2 | 0.18 | 0.04 | 1.54 | 0.38 | 0.09 | 0.022 | 0.62 | 0.16 | 0.0089 | 0.0022 | 0.0089 | 0.0022 | 0.0089 | 0.0022 | - | - | - | - |
| GEN-3 | 0.33 | 0.08 | 2.86 | 0.72 | 0.16 | 0.040 | 1.16 | 0.29 | 0.017 | 0.0012 | 0.017 | 0.0012 | 0.017 | 0.0041 | - | - | - | - |
| GEN-4 | 0.33 | 0.08 | 2.86 | 0.72 | 0.16 | 0.040 | 1.16 | 0.29 | 0.017 | 0.0041 | 0.017 | 0.0012 | 0.017 | 0.0041 | - | - | - | - |
| GEN-5 | 0.33 | 0.08 | 2.86 | 0.72 | 0.16 | 0.040 | 1.16 | 0.29 | 0.017 | 0.0041 | 0.017 | 0.0012 | 0.017 | 0.0041 | - | - | - | - |
| GEN-6 | 0.33 | 0.08 | 2.86 | 0.72 | 0.16 | 0.040 | 1.16 | 0.29 | 0.017 | 0.0041 | 0.017 | 0.0012 | 0.017 | 0.0041 | - | - | - | - |

| Unit No. | NOx | | CO | | VOC | | SOx | | PM[1] | | PM10[1] | | PM2.5[1] | | $H_2S$ | | Lead | |
|---|---|---|---|---|---|---|---|---|---|---|---|---|---|---|---|---|---|---|
| | lb/hr | ton/yr | lb/hr | ton/yr | lb/hr | ton/yr | lb/hr | ton/yr | lb/hr | ton/yr | lb/hr | ton/yr | lb/hr | ton/yr | lb/hr | ton/yr | lb/hr | ton/yr |
| GEN-7 | 0.33 | 0.08 | 2.86 | 0.72 | 0.16 | 0.040 | 1.16 | 0.29 | 0.017 | 0.0041 | 0.017 | 0.0012 | 0.017 | 0.0041 | - | - | - | - |
| GEN-8 | 0.33 | 0.08 | 2.86 | 0.72 | 0.16 | 0.040 | 1.16 | 0.29 | 0.017 | 0.0041 | 0.017 | 0.0012 | 0.017 | 0.0041 | - | - | - | - |
| GEN-9 | 0.33 | 0.08 | 2.86 | 0.72 | 0.16 | 0.040 | 1.16 | 0.29 | 0.017 | 0.0041 | 0.017 | 0.0012 | 0.017 | 0.0041 | - | - | - | - |
| GEN-10 | 0.33 | 0.08 | 2.86 | 0.72 | 0.16 | 0.040 | 1.16 | 0.29 | 0.017 | 0.0041 | 0.017 | 0.0012 | 0.017 | 0.0041 | - | - | - | - |
| GEN-11 | 0.33 | 0.08 | 2.86 | 0.72 | 0.16 | 0.040 | 1.16 | 0.29 | 0.017 | 0.0041 | 0.017 | 0.0012 | 0.017 | 0.0041 | - | - | - | - |
| GEN-12 | 0.33 | 0.08 | 2.86 | 0.72 | 0.16 | 0.040 | 1.16 | 0.29 | 0.017 | 0.0041 | 0.017 | 0.0012 | 0.017 | 0.0041 | - | - | - | - |
| T-5 | - | - | - | - | 32.12 | 16.87 | - | - | - | - | - | - | - | - | 0.0038 | 0.0023 | - | - |
| T-6 | - | - | - | - | 0.14 | 0.63 | - | - | - | - | - | - | - | - | 0.0052 | 0.010 | - | - |
| COMB-1 | - | - | - | - | - | - | - | - | - | - | - | - | - | - | - | - | - | - |
| LOAD | - | - | - | - | 257.50 | 1088.27 | - | - | - | - | - | - | - | - | - | - | - | - |
| FUG | - | - | - | - | 25.29 | 110.76 | - | - | - | - | - | - | - | - | 0.00070 | 0.0031 | - | - |
| HAUL | - | - | - | - | - | - | - | - | 0.41 | 1.46 | 0.11 | 0.37 | 0.011 | 0.037 | - | - | - | - |
| **Totals** | 25.02 | 71.50 | 53.47 | 106.48 | 980.26 | 3,620.82 | 14.25 | 4.74 | 3.49 | 14.07 | 3.18 | 12.95 | 3.08 | 12.64 | 14.19 | 62.07 | 0.00 | 0.00 |

**1Condensable Particulate Matter: Include condensable particulate matter emissions for PM10 and PM2.2 if the source is a combustion source. Do not include condensable particulate matter for PM unless PM is set equal to PM10 and PM2.2. Particulate matter (PM) is not subject to an ambient air quality standard, but PM is a regulated air pollutant under PSD (20.2.74 NMAC) and Title V (20.2.70 NMAC).**

# Table 2-E: Requested Allowable Emissions

Unit & stack numbering must be consistent throughout the application package. Fill all cells in this table with the emission numbers or a "-" symbol. A "-" symbol indicates that emissions of this pollutant are not expected. Numbers shall be expressed to at least 2 decimal points (e.g. 0.41, 1.41, or $1.41E^{-4}$).

| Unit No. | NOx | | CO | | VOC | | SOx | | PM[1] | | PM10[1] | | PM2.5 | | $H_2S$ | | Lead | |
|---|---|---|---|---|---|---|---|---|---|---|---|---|---|---|---|---|---|---|
| | lb/hr | ton/yr | lb/hr | ton/yr | lb/hr | ton/yr | lb/hr | ton/yr | lb/hr | ton/yr | lb/hr | ton/yr | lb/hr | ton/yr | lb/hr | ton/yr | lb/hr | ton/yr |
| EP-2 | 2.60 | 11.38 | 2.18 | 9.56 | 0.14 | 0.63 | 0.022 | 0.10 | 0.20 | 0.86 | 0.20 | 0.86 | 0.20 | 0.86 | - | - | - | - |
| 2-EP-2 | 0.84 | 3.68 | 2.18 | 9.56 | 0.14 | 0.63 | 0.022 | 0.10 | 0.20 | 0.86 | 0.20 | 0.86 | 0.20 | 0.86 | - | - | - | - |
| 3-EP-2 | 0.84 | 3.68 | 2.18 | 9.56 | 0.14 | 0.63 | 0.022 | 0.10 | 0.20 | 0.86 | 0.20 | 0.86 | 0.20 | 0.86 | - | - | - | - |
| EP-3A | 2.23 | 9.77 | 4.53 | 19.83 | 0.38 | 1.66 | 0.06 | 0.26 | 0.52 | 2.29 | 0.52 | 2.29 | 0.52 | 2.29 | - | - | - | - |
| EP-3B | 0.34 | 1.49 | 3.48 | 15.22 | 1.61 | 7.05 | 0.07 | 0.31 | 1.10 | 4.83 | 1.10 | 4.83 | 1.10 | 4.83 | - | - | - | - |
| EP-4 | 0.38 | 1.67 | 0.32 | 1.41 | 0.021 | 0.092 | 0.0032 | 0.014 | 0.029 | 0.127 | 0.029 | 0.127 | 0.029 | 0.127 | - | - | - | - |
| 2-EP-4 | 0.38 | 1.67 | 0.32 | 1.41 | 0.021 | 0.092 | 0.0032 | 0.014 | 0.029 | 0.127 | 0.029 | 0.127 | 0.029 | 0.127 | - | - | - | - |
| 3-EP-4 | 0.38 | 1.67 | 0.32 | 1.41 | 0.021 | 0.092 | 0.0032 | 0.014 | 0.029 | 0.127 | 0.029 | 0.127 | 0.029 | 0.127 | - | - | - | - |
| EP-5 | 0.93 | 4.08 | 0.78 | 3.43 | 0.051 | 0.22 | 0.008 | 0.035 | 0.071 | 0.31 | 0.071 | 0.31 | 0.071 | 0.31 | - | - | - | - |
| 2-EP-5 | 0.93 | 4.08 | 0.78 | 3.43 | 0.051 | 0.22 | 0.008 | 0.035 | 0.071 | 0.31 | 0.071 | 0.31 | 0.071 | 0.31 | - | - | - | - |
| 3-EP-5 | 0.93 | 4.08 | 0.78 | 3.43 | 0.051 | 0.22 | 0.008 | 0.035 | 0.071 | 0.31 | 0.071 | 0.31 | 0.071 | 0.31 | - | - | - | - |
| EP-6 | 2.29 | 10.05 | 1.93 | 8.44 | 0.126 | 0.55 | 0.019 | 0.09 | 0.17 | 0.76 | 0.17 | 0.76 | 0.17 | 0.76 | - | - | - | - |
| 2-EP-6 | 2.29 | 10.05 | 1.93 | 8.44 | 0.126 | 0.55 | 0.019 | 0.09 | 0.17 | 0.76 | 0.17 | 0.76 | 0.17 | 0.76 | - | - | - | - |
| EP-7 | Emissions represented at the thermal oxidizer (Unit EP-9) | | | | | | | | | | | | | | | | | |
| 2-EP-7 | Emissions represented at the thermal oxidizer (Unit EP-9) | | | | | | | | | | | | | | | | | |
| 3-EP-7 | Emissions represented at the thermal oxidizer (Unit EP-9) | | | | | | | | | | | | | | | | | |
| EP-8 | Emissions represented at the thermal oxidizer (Unit EP-9) | | | | | | | | | | | | | | | | | |
| 2-EP-8 | Emissions represented at the thermal oxidizer (Unit EP-9) | | | | | | | | | | | | | | | | | |
| 3-EP-8 | Emissions represented at the thermal oxidizer (Unit EP-9) | | | | | | | | | | | | | | | | | |
| EP-9 | 6.12 | 26.81 | 2.98 | 13.05 | 0.53 | 2.32 | 26.66 | 116.79 | 0.60 | 2.63 | 0.60 | 2.63 | 0.60 | 2.63 | 0.014 | 0.062 | - | - |
| T-1 | Emissions represented at the combustor (Unit COMB-1) | | | | | | | | | | | | | | | | | |
| T-2 | Emissions represented at the combustor (Unit COMB-1) | | | | | | | | | | | | | | | | | |
| T-3 | Emissions represented at the combustor (Unit COMB-1) | | | | | | | | | | | | | | | | | |
| T-4 | Emissions represented at the combustor (Unit COMB-1) | | | | | | | | | | | | | | | | | |
| GEN-1 | 5.75 | 1.44 | 0.79 | 0.20 | 1.69 | 0.42 | 1.77 | 0.44 | 0.034 | 0.0084 | 0.034 | 0.0084 | 0.034 | 0.0084 | - | - | - | - |
| GEN-2 | 0.18 | 0.044 | 1.54 | 0.38 | 0.087 | 0.022 | 0.62 | 0.16 | 0.0089 | 0.0022 | 0.0089 | 0.0022 | 0.0089 | 0.0022 | - | - | - | - |
| GEN-3 | 0.33 | 0.083 | 2.86 | 0.72 | 0.16 | 0.040 | 1.16 | 0.29 | 0.017 | 0.0012 | 0.017 | 0.0012 | 0.017 | 0.0041 | - | - | - | - |
| GEN-4 | 0.33 | 0.083 | 2.86 | 0.72 | 0.16 | 0.040 | 1.16 | 0.29 | 0.017 | 0.0041 | 0.017 | 0.0012 | 0.017 | 0.0041 | - | - | - | - |
| GEN-5 | 0.33 | 0.083 | 2.86 | 0.72 | 0.16 | 0.040 | 1.16 | 0.29 | 0.017 | 0.0041 | 0.017 | 0.0012 | 0.017 | 0.0041 | - | - | - | - |
| GEN-6 | 0.33 | 0.083 | 2.86 | 0.72 | 0.16 | 0.040 | 1.16 | 0.29 | 0.017 | 0.0041 | 0.017 | 0.0012 | 0.017 | 0.0041 | - | - | - | - |
| GEN-7 | 0.33 | 0.083 | 2.86 | 0.72 | 0.16 | 0.040 | 1.16 | 0.29 | 0.017 | 0.0041 | 0.017 | 0.0012 | 0.017 | 0.0041 | - | - | - | - |
| GEN-8 | 0.33 | 0.083 | 2.86 | 0.72 | 0.16 | 0.040 | 1.16 | 0.29 | 0.017 | 0.0041 | 0.017 | 0.0012 | 0.017 | 0.0041 | - | - | - | - |
| GEN-9 | 0.33 | 0.083 | 2.86 | 0.72 | 0.16 | 0.040 | 1.16 | 0.29 | 0.017 | 0.0041 | 0.017 | 0.0012 | 0.017 | 0.0041 | - | - | - | - |
| GEN-10 | 0.33 | 0.083 | 2.86 | 0.72 | 0.16 | 0.040 | 1.16 | 0.29 | 0.017 | 0.0041 | 0.017 | 0.0012 | 0.017 | 0.0041 | - | - | - | - |
| GEN-11 | 0.33 | 0.083 | 2.86 | 0.72 | 0.16 | 0.040 | 1.16 | 0.29 | 0.017 | 0.0041 | 0.017 | 0.0012 | 0.017 | 0.0041 | - | - | - | - |
| GEN-12 | 0.33 | 0.083 | 2.86 | 0.72 | 0.16 | 0.040 | 1.16 | 0.29 | 0.0165 | 0.0041 | 0.017 | 0.0012 | 0.017 | 0.0041 | - | - | - | - |
| T-5 | Emissions represented at the combustor (Unit COMB-1) | | | | | | | | | | | | | | | | | |

| Unit No. | NOx | | CO | | VOC | | SOx | | PM[1] | | PM10[1] | | PM2.21 | | $H_2S$ | | Lead | |
|---|---|---|---|---|---|---|---|---|---|---|---|---|---|---|---|---|---|---|
| | lb/hr | ton/yr | lb/hr | ton/yr | lb/hr | ton/yr | lb/hr | ton/yr | lb/hr | ton/yr | lb/hr | ton/yr | lb/hr | ton/yr | lb/hr | ton/yr | lb/hr | ton/yr |
| T-6 | - | - | - | - | 0.14 | 0.63 | - | - | - | - | - | - | - | - | 0.0052 | 0.0096 | - | - |
| COMB-1 | 7.73 | 3.08 | 15.43 | 6.16 | 37.59 | 4.26 | 0.16 | 3.83E-03 | 0.42 | 0.17 | 0.42 | 0.17 | 0.417 | 0.167 | 3.53E-03 | 6.11E-04 | - | - |
| LOAD | - | - | - | - | 12.88 | 54.41 | - | - | - | - | - | - | - | - | - | - | - | - |
| FUG | - | - | - | - | 25.29 | 110.76 | - | - | - | - | - | - | - | - | 7.01E-04 | 3.07E-03 | - | - |
| HAUL | - | - | - | - | - | - | - | - | 0.41 | 1.46 | 0.11 | 0.37 | 0.011 | 0.037 | - | - | - | - |
| **Totals** | 38.45 | 99.56 | 71.05 | 122.05 | 82.71 | 185.88 | 41.05 | 121.46 | 4.50 | 16.86 | 4.20 | 15.74 | 4.10 | 15.44 | 0.024 | 0.075 | - | - |

**1 Condensable Particulate Matter: Include condensable particulate matter emissions for PM10 and PM2.2 if the source is a combustion source. Do not include condensable particulate matter for PM unless PM is set equal to PM10 and PM2.2. Particulate matter (PM) is not subject to an ambient air quality standard, but it is a regulated air pollutant under PSD (20.2.74 NMAC) and Title V (20.2.70 NMAC).**

"*" denotes that an hourly emission rate is not requested.

# Table 2-F: Additional Emissions during Startup, Shutdown, and Routine Maintenance (SSM)

☐ This table is intentionally left blank since all emissions at this facility due to routine or predictable startup, shutdown, or scehduled maintenance are no higher than those listed in Table 2-E and a malfunction emission limit is not already permitted or requested. If you are required to report GHG emissions as described in Section 6a, include any GHG emissions during Startup, Shutdown, and/or Scheduled Maintenance (SSM) in Table 2-P. Provide an explanations of SSM emissions in Section 6 and 6a.

All applications for facilities that have emissions during routine our predictable startup, shutdown or scheduled maintenance (SSM)[1], including NOI applications, must include in this table the Maximum Emissions during routine or predictable startup, shutdown and scheduled maintenance (20.2.7 NMAC, 20.2.72.203.A.3 NMAC, 20.2.73.200.D.2 NMAC). In Section 6 and 6a, provide emissions calculations for all SSM emissions reported in this table. Refer to "Guidance for Submittal of Startup, Shutdown, Maintenance Emissions in Permit Applications (https://www.env.nm.gov/aqb/permit/aqb_pol.html) for more detailed instructions. Numbers shall be expressed to at least 2 decimal points (e.g. 0.41, 1.41, or 1.41E-4).

| Unit No. | NOx | | CO | | VOC | | SOx | | PM[2] | | PM10[2] | | PM2.5 | | $H_2S$ | | Lead | |
|---|---|---|---|---|---|---|---|---|---|---|---|---|---|---|---|---|---|---|
| | lb/hr | ton/yr | lb/hr | ton/yr | lb/hr | ton/yr | lb/hr | ton/yr | lb/hr | ton/yr | lb/hr | ton/yr | lb/hr | ton/yr | lb/hr | ton/yr | lb/hr | ton/yr |
| EP-1 | 1582.8 | 19.8 | 3,159.9 | 39.4 | 2,591.05 | 48.43 | 828.62 | 10.00 | - | - | - | - | - | - | 8.98 | 0.11 | - | - |
| 2-EP-1 | 1,578.1 | 18.9 | 3,150.5 | 37.8 | 2,484.70 | 29.82 | 828.5 | 9.9 | - | - | - | - | - | - | 8.98 | 0.11 | - | - |
| 3-EP-1 | 1,578.1 | 18.9 | 3,150.5 | 37.8 | 2,484.70 | 29.82 | 828.5 | 9.9 | - | - | - | - | - | - | 8.98 | 0.11 | - | - |
| SSM-TO | - | - | - | - | 326.15 | 3.26 | - | - | - | - | - | - | - | - | 14.17 | 0.142 | - | - |
| MSSM | - | - | - | - | 277.95 | 4.12 | - | - | - | - | - | - | - | - | 0.011 | 0.00016 | - | - |
| MSST | - | - | - | - | 38.16 | 0.034 | - | - | - | - | - | - | - | - | - | - | - | - |
| MSSB | Emissions represented at the combustor (Unit COMB-1) | | | | | | | | | | | | | | | | | |
| **Totals** | 4,739 | 57.6 | 9,460.9 | 115 | 8,202.72 | 115.48 | 2,485.62 | 29.8 | 0.00 | 0.00 | 0.00 | 0.00 | 0.00 | 0.00 | 41.13 | 0.47 | 0.00 | 0.00 |

1 For instance, if the short term steady-state Table 2-E emissions are 2 lb/hr and the SSM rate is 12 lb/hr, enter 7 lb/hr in this table. If the annual steady-state Table 2-E emissions are 21.9 TPY, and the number of scheduled SSM events result in annual emissions of 31.9 TPY, enter 10.0 TPY in the table below.

2 Condensable Particulate Matter: Include condensable particulate matter emissions for PM10 and PM2.2 if the source is a combustion source. Do not include condensable particulate matter for PM unless PM is set equal to PM10 and PM2.2. Particulate matter (PM) is not subject to an ambient air quality standard, but it is a regulated air pollutant under PSD (20.2.74 NMAC) and Title V (20.2.70 NMAC).

# Table 2-G: Stack Exit and Fugitive Emission Rates for Special Stacks

☑ I have elected to leave this table blank because this facility does not have any stacks/vents that split emissions from a single source or combine emissions from more than one source listed in table 2-A. Additionally, the emission rates of all stacks match the Requested allowable emission rates stated in Table 2-E.

Use this table to list stack emissions (requested allowable) from split and combined stacks. List Toxic Air Pollutants (TAPs) and Hazardous Air Pollutants (HAPs) in Table 2-I. List all fugitives that are associated with the normal, routine, and non-emergency operation of the facility. Unit and stack numbering must correspond throughout the application package. Refer to Table 2-E for instructions on use of the "-" symbol and on significant figures.

| Stack No. | Serving Unit Number(s) from Table 2-A | NOx | | CO | | VOC | | SOx | | PM | | PM10 | | PM2.5 | | ☑ $H_2S$ or ☐ Lead | |
|---|---|---|---|---|---|---|---|---|---|---|---|---|---|---|---|---|---|
| | | lb/hr | ton/yr | lb/hr | ton/yr | lb/hr | ton/yr | lb/hr | ton/yr | lb/hr | ton/yr | lb/hr | ton/yr | lb/hr | ton/yr | lb/hr | ton/yr |
| | | | | | | | | | | | | | | | | | |
| | | | | | | | | | | | | | | | | | |
| | | | | | | | | | | | | | | | | | |
| | | | | | | | | | | | | | | | | | |
| | | | | | | | | | | | | | | | | | |
| | | | | | | | | | | | | | | | | | |
| | | | | | | | | | | | | | | | | | |
| | | | | | | | | | | | | | | | | | |
| | | | | | | | | | | | | | | | | | |
| | | | | | | | | | | | | | | | | | |
| | | | | | | | | | | | | | | | | | |
| | | | | | | | | | | | | | | | | | |
| | | | | | | | | | | | | | | | | | |
| | | | | | | | | | | | | | | | | | |
| | | | | | | | | | | | | | | | | | |
| | | | | | | | | | | | | | | | | | |
| | | | | | | | | | | | | | | | | | |
| | | | | | | | | | | | | | | | | | |
| | | | | | | | | | | | | | | | | | |
| | | | | | | | | | | | | | | | | | |
| | | | | | | | | | | | | | | | | | |
| | | | | | | | | | | | | | | | | | |
| | | | | | | | | | | | | | | | | | |
| | | | | | | | | | | | | | | | | | |
| | | | | | | | | | | | | | | | | | |
| **Totals**: | | | | | | | | | | | | | | | | | |

# Table 2-H: Stack Exit Conditions

Unit and stack numbering must correspond throughout the application package. Include the stack exit conditions for each unit that emits from a stack, including blowdown venting parameters and tank emissions. If the facility has multiple operating scenarios, complete a separate Table 2-H for each scenario and, for each, type scenario name here:

| Stack Number | Serving Unit Number(s) from Table 2-A | Orientation (H-Horizontal V=Vertical) | Rain Caps (Yes or No) | Height Above Ground (ft) | Temp. (F) | Flow Rate | | Moisture by Volume (%) | Velocity (ft/sec) | Inside Diameter (ft) |
|---|---|---|---|---|---|---|---|---|---|---|
| | | | | | | (acfs) | (dscfs) | | | |
| EP-1 | EP-1 | V | No | 100.00 | 1832 | 0.00 | - | - | 62.60 | 1.00 |
| 2-EP-1 | 2-EP-1 | V | No | 199.00 | 1832 | 49.17 | - | - | 62.60 | 1.00 |
| 3-EP-1 | 3-EP-1 | V | No | 120.00 | 1832 | 49.17 | - | - | 62.60 | 1.00 |
| EP-2 | EP-2 | V | No | 22.20 | 624 | 243.70 | - | - | 21.12 | 3.83 |
| 2-EP-2 | 2-EP-2 | V | No | 22.80 | 624 | 90.05 | - | - | 21.12 | 2.33 |
| 3-EP-2 | 3-EP-2 | V | No | 22.80 | 624 | 90.05 | - | - | 21.12 | 2.33 |
| EP-3A | EP-3A | V | No | 24.80 | 624 | 1416.44 | - | - | 176.12 | 3.20 |
| EP-3B | EP-3B | V | No | 32.70 | 624 | 2213.19 | - | - | 176.12 | 4.00 |
| EP-4 | EP-4 | V | No | 22.00 | 624 | 243.70 | - | - | 77.57 | 2.00 |
| 2-EP-4 | 2-EP-4 | V | No | 31.80 | 624 | 243.70 | - | - | 77.57 | 2.00 |
| 3-EP-4 | 3-EP-4 | V | No | 31.80 | 624 | 2213.19 | - | - | 77.57 | 2.00 |
| EP-5 | EP-2 | V | No | 12.80 | 624 | 9.92 | - | - | 2.61 | 2.20 |
| 2-EP-5 | 2-EP-2 | V | No | 22.00 | 220 | 59.33 | - | - | 42.71 | 1.33 |
| 3-EP-5 | 3-EP-2 | V | No | 22.00 | 220 | 59.33 | - | - | 42.71 | 1.33 |
| EP-6 | EP-6 | V | No | 24.90 | 624 | 41980.45 | - | - | 9845.67 | 2.33 |
| 2-EP-6 | 2_EP-6 | V | No | 24.90 | 624 | 41980.45 | - | - | 9845.67 | 2.33 |
| EP-9 | EP-7, 2-EP-7, 3-EP-7, EP-8, 2-EP-8, 3-EP-8 | V | No | 76.00 | 1600 | 951.12 | - | - | 12.11 | 10.0 |
| COMB-1 | T-1 through T-2 | V | No | 20.00 | 1200 | 708.50 | - | - | 18.41 | 7.00 |
| GEN-1 | GEN-1 | V | No | 14.8 | 782 | 1667.15 | - | - | 72.2 | 0.70 |
| GEN-2 | GEN-2 | V | No | 14.8 | 782 | 1667.15 | - | - | 72.2 | 0.70 |
| GEN-3 | GEN-3 | V | No | 14.8 | 782 | 1667.15 | - | - | 72.2 | 0.70 |
| GEN-4 | GEN-4 | V | No | 14.8 | 782 | 1667.15 | - | - | 72.2 | 0.70 |
| GEN-5 | GEN-5 | V | No | 14.8 | 782 | 1667.15 | - | - | 72.2 | 0.70 |
| GEN-6 | GEN-6 | V | No | 14.8 | 782 | 1667.15 | - | - | 72.2 | 0.70 |
| GEN-7 | GEN-7 | V | No | 14.8 | 782 | 1667.15 | - | - | 72.2 | 0.70 |

| Stack Number | Serving Unit Number(s) from Table 2-A | Orientation (H-Horizontal V=Vertical) | Rain Caps (Yes or No) | Height Above Ground (ft) | Temp. (F) | Flow Rate | | Moisture by Volume (%) | Velocity (ft/sec) | Inside Diameter (ft) |
|---|---|---|---|---|---|---|---|---|---|---|
| | | | | | | (acfs) | (dscfs) | | | |
| GEN-8 | GEN-8 | V | No | 14.8 | 782 | 1667.15 | - | - | 72.2 | 0.70 |
| GEN-9 | GEN-9 | V | No | 14.8 | 782 | 1667.15 | - | - | 72.2 | 0.70 |
| GEN-10 | GEN-10 | V | No | 14.8 | 782 | 1667.15 | - | - | 72.2 | 0.70 |
| GEN-11 | GEN-11 | V | No | 14.8 | 782 | 1667.15 | - | - | 72.2 | 0.70 |
| GEN-12 | GEN-12 | V | No | 14.8 | 782 | 1667.15 | - | - | 72.2 | 0.70 |

# Table 2-I: Stack Exit and Fugitive Emission Rates for HAPs and TAPs

In the table below, report the Potential to Emit for each HAP from each regulated emission unit listed in Table 2-A, only if the entire facility emits the HAP at a rate greater than or equal to one (1) ton per year For each such emission unit, HAPs shall be reported to the nearest 0.1 tpy. Each facility-wide Individual HAP total and the facility-wide Total HAPs shall be the sum of all HAP sources calculated to the nearest 0.1 ton per year. Per 20.2.72.403.A.1 NMAC, facilities not exempt [see 20.2.72.402.C NMAC] from TAP permitting shall report each TAP that has an uncontrolled emission rate in excess of its pounds per hour screening level specified in 20.2.72.202 NMAC. TAPs shall be reported using one more significant figure than the number of significant figures shown in the pound per hour threshold corresponding to the substance. Use the HAP nomenclature as it appears in Section 112 (b) of the 1990 CAAA and the TAP nomenclature as it listed in 20.2.72.202 NMAC. Include tank-flashing emissions estimates of HAPs in this table. For each HAP or TAP listed, fill all cells in this table with the emission numbers or a "-" symbol. A "-" symbol indicates that emissions of this pollutant are not expected or the pollutant is emitted in a quantity less than the threshold amounts described above.

| Stack No. | Unit No.(s) | Total HAPs | | Benzene ☑ HAP or ☐ TAP | | Hexane ☑ HAP or ☐ TAP | | Provide Pollutant Name Here ☐ HAP or ☐ TAP | | Provide Pollutant Name Here ☐ HAP or ☐ TAP | | Provide Pollutant Name Here ☐ HAP or ☐ TAP | | Provide Pollutant Name Here ☐ HAP or ☐ TAP | | Provide Pollutant Name Here ☐ HAP or ☐ TAP | | Provide Pollutant Name Here ☐ HAP or ☐ TAP | |
|---|---|---|---|---|---|---|---|---|---|---|---|---|---|---|---|---|---|---|---|
| | | lb/hr | ton/yr | lb/hr | ton/yr | lb/hr | ton/yr | lb/hr | ton/yr | lb/hr | ton/yr | lb/hr | ton/yr | lb/hr | ton/yr | lb/hr | ton/yr | lb/hr | ton/yr |
| EP-2 | EP-2 | 0.0021 | 0.0092 | 5.46E-05 | 2.39E-04 | - | - | | | | | | | | | | | | |
| 2-EP-2 | 2-EP-2 | 0.0021 | 0.0092 | 5.46E-05 | 2.39E-04 | - | - | | | | | | | | | | | | |
| 3-EP-2 | 3-EP-2 | 0.0021 | 0.0092 | 5.46E-05 | 2.39E-04 | - | - | | | | | | | | | | | | |
| EP-3A | EP-3A | 0.0055 | 0.024 | 1.45E-04 | 6.34E-04 | - | - | | | | | | | | | | | | |
| EP-3B | EP-3B | 0.0067 | 0.029 | - | - | - | - | | | | | | | | | | | | |
| EP-4 | EP-4 | 0.00031 | 0.0013 | 8.03E-06 | 3.52E-05 | - | - | | | | | | | | | | | | |
| 2-EP-4 | 2-EP-4 | 0.00031 | 0.0013 | 8.03E-06 | 3.52E-05 | - | - | | | | | | | | | | | | |
| 3-EP-4 | 3-EP-4 | 0.00031 | 0.0013 | 8.03E-06 | 3.52E-05 | - | - | | | | | | | | | | | | |
| EP-5 | EP-5 | 0.00075 | 0.0033 | 1.96E-05 | 8.57E-05 | - | - | | | | | | | | | | | | |
| 2-EP-5 | 2-EP-5 | 0.00075 | 0.0033 | 1.96E-05 | 8.57E-05 | - | - | | | | | | | | | | | | |
| 3-EP-5 | 3-EP-5 | 0.00075 | 0.0033 | 1.96E-05 | 8.57E-05 | - | - | | | | | | | | | | | | |
| EP-6 | EP-6 | 0.00185 | 0.0081 | 4.82E-05 | 2.11E-04 | | | | | | | | | | | | | | |
| 2-EP-6 | 2-EP-6 | 0.00185 | 0.0081 | 4.82E-05 | 2.11E-04 | | | | | | | | | | | | | | |
| EP-9 | EP-7 | 0.28 | 1.24 | 0.13 | 0.58 | - | - | | | | | | | | | | | | |
| | 2-EP-7 | | | | | - | - | | | | | | | | | | | | |
| | 3-EP-7 | | | | | - | - | | | | | | | | | | | | |
| | EP-8 | | | | | - | - | | | | | | | | | | | | |
| | 2-EP-8 | | | | | - | - | | | | | | | | | | | | |
| | 3-EP-8 | | | | | - | - | | | | | | | | | | | | |
| | EP-9 | | | | | - | - | | | | | | | | | | | | |
| COMB-1 | T-1 | 3.43 | 4.74 | 3.43 | 4.74 | - | - | | | | | | | | | | | | |
| | T-2 | | | | | - | - | | | | | | | | | | | | |
| | T-3 | | | | | - | - | | | | | | | | | | | | |
| | T-4 | | | | | - | - | | | | | | | | | | | | |
| | T-5 | | | | | - | - | | | | | | | | | | | | |
| | COMB-1 | | | | | - | - | | | | | | | | | | | | |
| GEN-1 | GEN-1 | 0.023 | 0.0056 | 0.0057 | 0.0014 | - | - | | | | | | | | | | | | |
| GEN-2 | GEN-2 | 0.0079 | 0.0020 | 0.0020 | 5.00E-04 | - | - | | | | | | | | | | | | |
| GEN-3 | GEN-3 | 0.015 | 3.70E-03 | 3.72E-03 | 9.31E-04 | - | - | | | | | | | | | | | | |
| GEN-4 | GEN-4 | 0.015 | 3.70E-03 | 3.72E-03 | 9.31E-04 | - | - | | | | | | | | | | | | |
| GEN-5 | GEN-5 | 0.015 | 3.70E-03 | 3.72E-03 | 9.31E-04 | - | - | | | | | | | | | | | | |

| Stack No. | Unit No.(s) | Total HAPs | | Benzene ☑ HAP or ☐ TAP | | Hexane ☑ HAP or ☐ TAP | | Provide Pollutant Name Here ☐ HAP or ☐ TAP | | Provide Pollutant Name Here ☐ HAP or ☐ TAP | | Provide Pollutant Name Here ☐ HAP or ☐ TAP | | Provide Pollutant Name Here ☐ HAP or ☐ TAP | | Provide Pollutant Name Here ☐ HAP or ☐ TAP | | Provide Pollutant Name Here ☐ HAP or ☐ TAP | |
|---|---|---|---|---|---|---|---|---|---|---|---|---|---|---|---|---|---|---|---|
| | | lb/hr | ton/yr | lb/hr | ton/yr | lb/hr | ton/yr | lb/hr | ton/yr | lb/hr | ton/yr | lb/hr | ton/yr | lb/hr | ton/yr | lb/hr | ton/yr | lb/hr | ton/yr |
| GEN-6 | GEN-6 | 0.015 | 3.70E-03 | 3.72E-03 | 9.31E-04 | - | - | | | | | | | | | | | | |
| GEN-7 | GEN-7 | 0.015 | 3.70E-03 | 3.72E-03 | 9.31E-04 | - | - | | | | | | | | | | | | |
| GEN-8 | GEN-8 | 0.015 | 3.70E-03 | 3.72E-03 | 9.31E-04 | - | - | | | | | | | | | | | | |
| GEN-9 | GEN-9 | 0.015 | 3.70E-03 | 3.72E-03 | 9.31E-04 | - | - | | | | | | | | | | | | |
| GEN-10 | GEN-10 | 0.015 | 3.70E-03 | 3.72E-03 | 9.31E-04 | - | - | | | | | | | | | | | | |
| GEN-11 | GEN-11 | 0.015 | 3.70E-03 | 3.72E-03 | 9.31E-04 | - | - | | | | | | | | | | | | |
| GEN-12 | GEN-12 | 0.015 | 3.70E-03 | 3.72E-03 | 9.31E-04 | - | - | | | | | | | | | | | | |
| T-6 | T-6 | 0.0050 | 0.022 | 3.61E-03 | 1.55E-02 | - | - | | | | | | | | | | | | |
| LOAD | LOAD | 1.16 | 4.58 | - | - | - | - | | | | | | | | | | | | |
| FUG | FUG | 1.41 | 6.19 | 0.12 | 0.51 | 1.12 | 4.91 | | | | | | | | | | | | |
| HAUL | HAUL | - | - | - | - | - | - | | | | | | | | | | | | |
| **Totals:** | | 6.49 | 16.93 | 3.73 | 5.86 | 1.12 | 4.91 | - | - | - | - | - | - | - | - | - | - | - | - |

"*" denotes that an hourly emission rate is not requested.

# Table 2-J: Fuel

Specify fuel characteristics and usage. Unit and stack numbering must correspond throughout the application package.

| Unit No. | Fuel Type (low sulfur Diesel, ultra low sulfur diesel, Natural Gas, Coal, …) | Fuel Source: purchased commercial, pipeline quality natural gas, residue gas, raw/field natural gas, process gas (e.g. SRU tail gas) or other | Specify Units | | | | |
|---|---|---|---|---|---|---|---|
| | | | Lower Heating Value BTU/scf | Hourly Usage scf/hr | Annual Usage MMscf/yr | Sulfur gr/dscf | % Ash |
| EP-1 | Natural Gas | Residue Gas | 1071.8 | 500.00 | 4.38 | 2.00 | NA |
| 2-EP-1 | Natural Gas | Residue Gas | 1071.8 | 78.00 | 11832.36 | 2.00 | NA |
| 3-EP-1 | Natural Gas | Residue Gas | 1071.8 | 219.00 | 9764.53 | 2.00 | NA |
| EP-2 | Natural Gas | Residue Gas | 1020 | 25980.39 | 227.59 | 2.00 | NA |
| 2-EP-2 | Natural Gas | Residue Gas | 1020 | 25980.39 | 0.00 | 2.00 | NA |
| 3-EP-2 | Natural Gas | Residue Gas | 1020 | 25980.39 | 0.00 | 2.00 | NA |
| EP-3A | Natural Gas | Residue Gas | 1020 | 68901.96 | 603.58 | 2.00 | NA |
| EP-3B | Natural Gas | Residue Gas | 1020 | 83107.84 | 728.02 | 2.00 | NA |
| EP-4 | Natural Gas | Residue Gas | 1020 | 3823.53 | 33.49 | 2.00 | NA |
| 2-EP-4 | Natural Gas | Residue Gas | 1020 | 3823.53 | 33.49 | 2.00 | NA |
| 3-EP-4 | Natural Gas | Residue Gas | 1020 | 3823.53 | 33.49 | 2.00 | NA |
| EP-5 | Natural Gas | Residue Gas | 1020 | 9313.73 | 81.59 | 2.00 | NA |
| 2-EP-5 | Natural Gas | Residue Gas | 1020 | 9313.73 | 81.59 | 2.00 | NA |
| 3-EP-5 | Natural Gas | Residue Gas | 1020 | 9313.73 | 81.59 | 2.00 | NA |
| EP-6 | Natural Gas | Residue Gas | 1020 | 22941.18 | 200.96 | 2.00 | NA |
| 2-EP-6 | Natural Gas | Residue Gas | 1020 | 22941.18 | 200.96 | 2.00 | NA |
| EP-9 | Natural Gas | Residue Gas | 1020 | 29411.76 | 257.65 | 2.00 | NA |
| COMB-1 | Natural Gas | Residue Gas | 1020 | 65.00 | 0.57 | 2.00 | NA |
| GEN-1 | Diesel Fuel | Purchased Commercial | 137,000 Btu/gal | 5.95 | 0.0030 | 15 ppm | NA |
| GEN-2 | Diesel Fuel | Purchased Commercial | 137,000 Btu/gal | 2.09 | 0.0010 | 15 ppm | NA |
| GEN-3 | Diesel Fuel | Purchased Commercial | 137,000 Btu/gal | 3.90 | 0.0019 | 15 ppm | NA |
| GEN-4 | Diesel Fuel | Purchased Commercial | 137,000 Btu/gal | 3.90 | 0.0019 | 15 ppm | NA |
| GEN-5 | Diesel Fuel | Purchased Commercial | 137,000 Btu/gal | 3.90 | 0.0019 | 15 ppm | NA |
| GEN-6 | Diesel Fuel | Purchased Commercial | 137,000 Btu/gal | 3.90 | 0.0019 | 15 ppm | NA |
| GEN-7 | Diesel Fuel | Purchased Commercial | 137,000 Btu/gal | 3.90 | 0.0019 | 15 ppm | NA |
| GEN-8 | Diesel Fuel | Purchased Commercial | 137,000 Btu/gal | 3.90 | 0.0019 | 15 ppm | NA |
| GEN-9 | Diesel Fuel | Purchased Commercial | 137,000 Btu/gal | 3.90 | 0.0019 | 15 ppm | NA |
| GEN-10 | Diesel Fuel | Purchased Commercial | 137,000 Btu/gal | 3.90 | 0.0019 | 15 ppm | NA |
| GEN-11 | Diesel Fuel | Purchased Commercial | 137,000 Btu/gal | 3.90 | 0.0019 | 15 ppm | NA |
| GEN-12 | Diesel Fuel | Purchased Commercial | 137,000 Btu/gal | 3.90 | 0.0019 | 15 ppm | NA |

# Table 2-K: Liquid Data for Tanks Listed in Table 2-L

For each tank, list the liquid(s) to be stored in each tank. If it is expected that a tank may store a variety of hydrocarbon liquids, enter "mixed hydrocarbons" in the Composition column for that tank and enter the corresponding data of the most volatile liquid to be stored in the tank. If tank is to be used for storage of different materials, list all the materials in the "All Calculations" attachment, run the newest version of TANKS on each, and use the material with the highest emission rate to determine maximum uncontrolled and requested allowable emissions rate. The permit will specify the most volatile category of liquids that may be stored in each tank. Include appropriate tank-flashing modeling input data. Use additional sheets if necessary. Unit and stack numbering must correspond throughout the application package.

| Tank No. | SCC Code | Material Name | Composition | Liquid Density (lb/gal) | Vapor Molecular Weight (lb/lb*mol) | Average Storage Conditions | | Max Storage Conditions | |
|---|---|---|---|---|---|---|---|---|---|
| | | | | | | Temperature (°F) | True Vapor Pressure (psia) | Temperature (°F) | True Vapor Pressure (psia) |
| T-1 | 40400311 | Condensate | Condensate | 3.66 | 52.44 | 63.2 | 6.82 | 95 | 4.69 |
| T-2 | 40400311 | Condensate | Condensate | 3.66 | 52.44 | 63.2 | 6.82 | 95 | 4.69 |
| T-3 | 40400311 | Condensate | Condensate | 3.66 | 52.44 | 63.2 | 6.82 | 95 | 4.69 |
| T-4 | 40400311 | Condensate | Condensate | 3.66 | 52.44 | 63.2 | 6.82 | 95 | 4.69 |
| T-5 | 40400311 | Condensate | Condensate | 3.66 | 52.44 | 63.2 | 6.82 | 95 | 4.69 |
| T-6 | 40400315 | Produced Water | Produced Water | 8.29 | 27.30 | 63.4 | 0.82 | 95 | 0.42 |

# Table 2-L: Tank Data

Include appropriate tank-flashing modeling input data. Use an addendum to this table for unlisted data categories. Unit and stack numbering must correspond throughout the application package. Use additional sheets if necessary. See reference Table 2-L2. Note: 1.00 bbl = 10.159 M3 = 42.0 gal

| Tank No. | Date Installed | Materials Stored | Seal Type (refer to Table 2-LR below) | Roof Type (refer to Table 2-LR below) | Capacity | | Diameter (M) | Vapor Space (M) | Color (from Table VI-C) | | Paint Condition (from Table VI-C) | Annual Throughput (gal/yr) | Turn-overs (per year) |
|---|---|---|---|---|---|---|---|---|---|---|---|---|---|
| | | | | | (bbl) | ($M^3$) | | | Roof | Shell | | | |
| T-1 | 2017 | Condensate | NA | FX | 1,000 | 119.2 | 6.55 | 8.0 | White | White | Good | 24,528,000 | 584 |
| T-2 | 2017 | Condensate | NA | FX | 1,000 | 119.2 | 6.55 | 8.0 | White | White | Good | 24,528,000 | 584 |
| T-3 | 2017 | Condensate | NA | FX | 1,000 | 119.2 | 6.55 | 8.0 | White | White | Good | 24,528,000 | 584 |
| T-4 | 2017 | Condensate | NA | FX | 1,000 | 119.2 | 6.55 | 8.0 | White | White | Good | 24,528,000 | 584 |
| T-5 | 2017 | Condensate | NA | FX | 1,000 | 119.2 | 6.55 | 8.0 | White | White | Good | 24,528,000 | 584 |
| T-6 | 2017 | Produced Water | NA | FX | 400 | 47.7 | 3.7 | 10.00 | White | White | Good | 1,030,097 | 61 |

## Table 2-L2: Liquid Storage Tank Data Codes Reference Table

| Roof Type | Seal Type, Welded Tank Seal Type | | Seal Type, Riveted Tank Seal Type | | Roof, Shell Color | Paint Condition |
|---|---|---|---|---|---|---|
| **FX**: Fixed Roof | **Mechanical Shoe Seal** | **Liquid-mounted resilient seal** | **Vapor-mounted resilient seal** | **Seal Type** | **WH**: White | Good |
| **IF**: Internal Floating Roof | **A**: Primary only | **A**: Primary only | **A**: Primary only | **A**: Mechanical shoe, primary only | **AS**: Aluminum (specular) | Poor |
| **EF**: External Floating Roof | **B**: Shoe-mounted secondary | **B**: Weather shield | **B**: Weather shield | **B**: Shoe-mounted secondary | **AD**: Aluminum (diffuse) | |
| **P**: Pressure | **C**: Rim-mounted secondary | **C**: Rim-mounted secondary | **C**: Rim-mounted secondary | **C**: Rim-mounted secondary | **LG**: Light Gray | |
| | | | | | **MG**: Medium Gray | |
| | | | | | **BL**: Black | |
| | | | | | **OT**: Other (specify) | |

Note: 1.00 bbl = 0.159 $M^3$ = 42.0 gal

## Table 2-M: Materials Processed and Produced (Use additional sheets as necessary.)

| Material Processed | | | | Material Produced | | | |
|---|---|---|---|---|---|---|---|
| **Description** | **Chemical Composition** | **Phase (Gas, Liquid, or Solid)** | **Quantity (specify units)** | **Description** | **Chemical Composition** | **Phase** | **Quantity (specify units)** |
| Natural Gas | Natural Gas | Gas | 735 MMscfd | Natural Gas | Natural Gas | Gas | 735 MMscfd |
| | | | | Condensate | Condensate | Liquid | 8000 bopd |
| | | | | Produced Water | Produced Water | Liquid | 303 bwpd |
| | | | | | | | |
| | | | | | | | |
| | | | | | | | |
| | | | | | | | |
| | | | | | | | |
| | | | | | | | |
| | | | | | | | |
| | | | | | | | |
| | | | | | | | |
| | | | | | | | |
| | | | | | | | |
| | | | | | | | |
| | | | | | | | |
| | | | | | | | |
| | | | | | | | |

# Table 2-N: CEM Equipment

Enter Continuous Emissions Measurement (CEM) Data in this table. If CEM data will be used as part of a federally enforceable permit condition, or used to satisfy the requirements of a state or federal regulation, include a copy of the CEM's manufacturer specification sheet in the Information Used to Determine Emissions attachment. Unit and stack numbering must correspond throughout the application package. Use additional sheets if necessary.

| Stack No. | Pollutant(s) | Manufacturer | Model No. | Serial No. | Sample Frequency | Averaging Time | Range | Sensitivity | Accuracy |
|---|---|---|---|---|---|---|---|---|---|
| Not Applicable | | | | | | | | | |
| | | | | | | | | | |
| | | | | | | | | | |
| | | | | | | | | | |
| | | | | | | | | | |
| | | | | | | | | | |
| | | | | | | | | | |
| | | | | | | | | | |
| | | | | | | | | | |
| | | | | | | | | | |
| | | | | | | | | | |
| | | | | | | | | | |
| | | | | | | | | | |
| | | | | | | | | | |
| | | | | | | | | | |
| | | | | | | | | | |
| | | | | | | | | | |
| | | | | | | | | | |
| | | | | | | | | | |

# Table 2-O: Parametric Emissions Measurement Equipment

Unit and stack numbering must correspond throughout the application package. Use additional sheets if necessary.

| Unit No. | Parameter/Pollutant Measured | Location of Measurement | Unit of Measure | Acceptable Range | Frequency of Maintenance | Nature of Maintenance | Method of Recording | Averaging Time |
|---|---|---|---|---|---|---|---|---|
| Not Applicable | | | | | | | | |
| | | | | | | | | |
| | | | | | | | | |
| | | | | | | | | |
| | | | | | | | | |
| | | | | | | | | |
| | | | | | | | | |
| | | | | | | | | |
| | | | | | | | | |
| | | | | | | | | |
| | | | | | | | | |
| | | | | | | | | |
| | | | | | | | | |
| | | | | | | | | |
| | | | | | | | | |
| | | | | | | | | |
| | | | | | | | | |
| | | | | | | | | |
| | | | | | | | | |
| | | | | | | | | |

# Table 2-P: Greenhouse Gas Emissions

Applications submitted under 20.2.70, 20.2.72, & 20.2.74 NMAC are required to complete this Table. Power plants, Title V major sources, and PSD major sources must report and calculate all GHG emissions for each unit. Applicants must report potential emission rates in short tons per year (see Section 6.a for assistance). Include GHG emissions during Startup, Shutdown, and Scheduled Maintenance in this table. For minor source facilities that are not power plants, are not Title V, or are not PSD, there are three options for reporting GHGs 1) report GHGs for each individual piece of equipment; 2) report all GHGs from a group of unit types, for example report all combustion source GHGs as a single unit and all venting GHG as a second separate unit; OR 3) check the following box ☐ By checking this box, the applicant acknowledges the total CO2e emissions are less than 75,000 tons per year.

| | | $CO_2$ ton/yr | $CH_4$ ton/yr | $N_2O$ ton/yr | $SF_6$ ton/yr | PFC/HFC ton/yr[2] | | | | | | | | | Total GHG Mass Basis ton/yr[4] | Total $CO_2e$ ton/yr[5] |
|---|---|---|---|---|---|---|---|---|---|---|---|---|---|---|---|---|
| **Unit No.** | **GWPs [1]** | **1** | **25** | **298** | **22,800** | **footnote 3** | | | | | | | | | | |
| **EP-2** | **mass GHG** | 13,577.41 | 0.26 | 0.026 | | | | | | | | | | | 13,577.69 | |
| | **$CO_2e$** | 13,577.41 | 6.40 | 7.63 | | | | | | | | | | | | 13,591.44 |
| **2-EP-2** | **mass GHG** | 13,577.41 | 0.26 | 0.026 | | | | | | | | | | | 13,577.69 | |
| | **$CO_2e$** | 13,577.41 | 6.40 | 7.63 | | | | | | | | | | | | 13,591.44 |
| **3-EP-2** | **mass GHG** | 13,577.41 | 0.26 | 0.026 | | | | | | | | | | | 13,577.69 | |
| | **$CO_2e$** | 13,577.41 | 6.40 | 7.63 | | | | | | | | | | | | 13,591.44 |
| **EP-3A** | **mass GHG** | 36,008.32 | 0.68 | 0.068 | | | | | | | | | | | 36,009.07 | |
| | **$CO_2e$** | 36,008.32 | 16.97 | 20.22 | | | | | | | | | | | | 36,045.51 |
| **EP-3B** | **mass GHG** | 43,432.35 | 0.82 | 0.082 | | | | | | | | | | | 43,433.25 | |
| | **$CO_2e$** | 43,432.35 | 20.46 | 24.39 | | | | | | | | | | | | 43,477.21 |
| **EP-4** | **mass GHG** | 1,998.19 | 0.038 | 0.0038 | | | | | | | | | | | 1,998.23 | |
| | **$CO_2e$** | 1,998.19 | 0.94 | 1.122 | | | | | | | | | | | | 2,000.25 |
| **2-EP-4** | **mass GHG** | 1,998.19 | 0.038 | 0.0038 | | | | | | | | | | | 1,998.23 | |
| | **$CO_2e$** | 1,998.19 | 0.94 | 1.122 | | | | | | | | | | | | 2,000.25 |
| **3-EP-4** | **mass GHG** | 1,998.19 | 0.038 | 0.0038 | | | | | | | | | | | 1,998.23 | |
| | **$CO_2e$** | 1,998.19 | 0.94 | 1.122 | | | | | | | | | | | | 2,000.25 |
| **EP-5** | **mass GHG** | 4,867.37 | 0.092 | 0.0092 | | | | | | | | | | | 4,867.48 | |
| | **$CO_2e$** | 4,867.37 | 2.29 | 2.73 | | | | | | | | | | | | 4,872.40 |
| **2-EP-5** | **mass GHG** | 4,867.37 | 0.092 | 0.0092 | | | | | | | | | | | 4,867.48 | |
| | **$CO_2e$** | 4,867.37 | 2.29 | 2.73 | | | | | | | | | | | | 4,872.40 |
| **3-EP-5** | **mass GHG** | 4,867.37 | 0.092 | 0.0092 | | | | | | | | | | | 4,867.48 | |
| | **$CO_2e$** | 4,867.37 | 2.29 | 2.73 | | | | | | | | | | | | 4,872.40 |
| **EP-6** | **mass GHG** | 11,989.11 | 0.23 | 0.023 | | | | | | | | | | | 11,989.36 | |
| | **$CO_2e$** | 11,989.11 | 5.65 | 6.73 | | | | | | | | | | | | 12,001.49 |
| **2-EP-6** | **mass GHG** | 11,989.11 | 0.23 | 0.023 | | | | | | | | | | | 11,989.36 | |
| | **$CO_2e$** | 11,989.11 | 5.65 | 6.73 | | | | | | | | | | | | 12,001.49 |
| **EP-7** | **mass GHG** | - | - | - | | | | | | | | | | | 0.00E+00 | |
| | **$CO_2e$** | - | - | - | | | | | | | | | | | | 0.00E+00 |
| **2-EP-7** | **mass GHG** | - | - | - | | | | | | | | | | | 0.00E+00 | |
| | **$CO_2e$** | - | - | - | | | | | | | | | | | | 0.00E+00 |
| **3-EP-7** | **mass GHG** | - | - | - | | | | | | | | | | | 0.00E+00 | |
| | **$CO_2e$** | - | - | - | | | | | | | | | | | | 0.00E+00 |

| | | $CO_2$ ton/yr | $CH_4$ ton/yr | $N_2O$ ton/yr | $SF_6$ ton/yr | PFC/HFC ton/yr[2] | | | | | | | | | Total GHG Mass Basis ton/yr[4] | Total $CO_2e$ ton/yr[5] |
|---|---|---|---|---|---|---|---|---|---|---|---|---|---|---|---|---|
| **Unit No.** | **GWPs [1]** | **1** | **25** | **298** | **22,800** | **footnote 3** | | | | | | | | | | |
| **EP-8** | **mass GHG** | - | - | - | | | | | | | | | | | 0.00 | |
| | **$CO_2e$** | - | - | - | | | | | | | | | | | | 0.00 |
| **2-EP-8** | **mass GHG** | - | - | - | | | | | | | | | | | 0.00 | |
| | **$CO_2e$** | - | - | - | | | | | | | | | | | | 0.00 |
| **3-EP-8** | **mass GHG** | - | - | - | | | | | | | | | | | 0.00 | |
| | **$CO_2e$** | - | - | - | | | | | | | | | | | | 0.00 |
| **EP-9** | **mass GHG** | 38,426.64 | 0.72 | 0.072 | | | | | | | | | | | 38,427.44 | |
| | **$CO_2e$** | 38,426.64 | 18.11 | 21.58 | | | | | | | | | | | | 38,466.33 |
| **EP-1** | **mass GHG** | 73,783.80 | 68.70 | 0.030 | | | | | | | | | | | 73,852.53 | |
| | **$CO_2e$** | 73,783.80 | 1,717.51 | 8.95 | | | | | | | | | | | | 75,510.25 |
| **2-EP-1** | **mass GHG** | 73,783.80 | 68.70 | 0.030 | | | | | | | | | | | 73,852.53 | |
| | **$CO_2e$** | 73,783.80 | 1,717.51 | 8.95 | | | | | | | | | | | | 75,510.25 |
| **3-EP-1** | **mass GHG** | 73,783.80 | 68.70 | 0.030 | | | | | | | | | | | 73,852.53 | |
| | **$CO_2e$** | 73,783.80 | 1,717.51 | 8.95 | | | | | | | | | | | | 75,510.25 |
| **GEN-1** | **mass GHG** | 248.49 | 0.010 | 0.002 | | | | | | | | | | | 248.51 | |
| | **$CO_2e$** | 248.49 | 0.25 | 0.60 | | | | | | | | | | | | 249.35 |
| **GEN-2** | **mass GHG** | 87.40 | 3.55E-03 | 0.001 | | | | | | | | | | | 87.40 | |
| | **$CO_2e$** | 87.40 | 0.089 | 0.21 | | | | | | | | | | | | 87.70 |
| **GEN-3** | **mass GHG** | 162.73 | 6.60E-03 | 0.001 | | | | | | | | | | | 162.74 | |
| | **$CO_2e$** | 162.73 | 0.17 | 0.39 | | | | | | | | | | | | 163.29 |
| **GEN-4** | **mass GHG** | 162.73 | 6.60E-03 | 0.001 | | | | | | | | | | | 162.74 | |
| | **$CO_2e$** | 162.73 | 0.17 | 0.39 | | | | | | | | | | | | 163.29 |
| **GEN-5** | **mass GHG** | 162.73 | 6.60E-03 | 0.001 | | | | | | | | | | | 162.74 | |
| | **$CO_2e$** | 162.73 | 0.17 | 0.39 | | | | | | | | | | | | 163.29 |
| **GEN-6** | **mass GHG** | 162.73 | 6.60E-03 | 0.001 | | | | | | | | | | | 162.74 | |
| | **$CO_2e$** | 162.73 | 0.17 | 0.39 | | | | | | | | | | | | 163.29 |
| **GEN-7** | **mass GHG** | 162.73 | 6.60E-03 | 0.001 | | | | | | | | | | | 162.74 | |
| | **$CO_2e$** | 162.73 | 0.17 | 0.39 | | | | | | | | | | | | 163.29 |
| **GEN-8** | **mass GHG** | 162.73 | 6.60E-03 | 0.001 | | | | | | | | | | | 162.74 | |
| | **$CO_2e$** | 162.73 | 0.17 | 0.39 | | | | | | | | | | | | 163.29 |
| **GEN-9** | **mass GHG** | 162.73 | 6.60E-03 | 0.001 | | | | | | | | | | | 162.74 | |
| | **$CO_2e$** | 162.73 | 0.17 | 0.39 | | | | | | | | | | | | 163.29 |
| **GEN-10** | **mass GHG** | 162.73 | 6.60E-03 | 0.001 | | | | | | | | | | | 162.74 | |
| | **$CO_2e$** | 162.73 | 0.17 | 0.39 | | | | | | | | | | | | 163.29 |
| **GEN-11** | **mass GHG** | 162.73 | 6.60E-03 | 0.001 | | | | | | | | | | | 162.74 | |
| | **$CO_2e$** | 162.73 | 0.17 | 0.39 | | | | | | | | | | | | 163.29 |
| **GEN-12** | **mass GHG** | 162.73 | 6.60E-03 | 0.001 | | | | | | | | | | | 162.74 | |
| | **$CO_2e$** | 162.73 | 0.17 | 0.39 | | | | | | | | | | | | 163.29 |
| **T-1** | **mass GHG** | - | - | - | | | | | | | | | | | 0.00E+00 | |
| | **$CO_2e$** | - | - | - | | | | | | | | | | | | 0.00E+00 |
| **T-2** | **mass GHG** | - | - | - | | | | | | | | | | | 0.00E+00 | |
| | **$CO_2e$** | - | - | - | | | | | | | | | | | | 0.00E+00 |
| **T-3** | **mass GHG** | - | - | - | | | | | | | | | | | 0.00E+00 | |
| | **$CO_2e$** | - | - | - | | | | | | | | | | | | 0.00E+00 |

| | | $CO_2$ ton/yr | $CH_4$ ton/yr | $N_2O$ ton/yr | $SF_6$ ton/yr | PFC/HFC ton/yr[2] | | | | | | | | | Total GHG Mass Basis ton/yr[4] | Total $CO_2e$ ton/yr[5] |
|---|---|---|---|---|---|---|---|---|---|---|---|---|---|---|---|---|
| **Unit No.** | **GWPs [1]** | **1** | **25** | **298** | **22,800** | **footnote 3** | | | | | | | | | | |
| **T-4** | **mass GHG** | - | - | - | | | | | | | | | | | 0.00E+00 | |
| | **$CO_2e$** | - | - | - | | | | | | | | | | | | 0.00E+00 |
| **T-5** | **mass GHG** | - | - | - | | | | | | | | | | | 0.00E+00 | |
| | **$CO_2e$** | - | - | - | | | | | | | | | | | | 0.00E+00 |
| **T-6** | **mass GHG** | 1.06 | 1.01 | - | | | | | | | | | | | 2.07 | |
| | **$CO_2e$** | 1.06 | 25.26 | - | | | | | | | | | | | | 26.32 |
| **COMB-1** | **mass GHG** | 2,990.01 | 0.018 | 0.0015 | | | | | | | | | | | 2,990.03 | |
| | **$CO_2e$** | 2,990.01 | 0.46 | 0.448 | | | | | | | | | | | | 2,990.92 |
| **LOAD** | **mass GHG** | - | - | - | | | | | | | | | | | 0.00E+00 | |
| | **$CO_2e$** | - | - | - | | | | | | | | | | | | 0.00E+00 |
| **FUG** | **mass GHG** | 4.58 | 333.58 | - | | | | | | | | | | | 338.17 | |
| | **$CO_2e$** | 4.58 | 8,339.59 | - | | | | | | | | | | | | 8,344.17 |
| **HAUL** | **mass GHG** | - | - | - | | | | | | | | | | | 0.00E+00 | |
| | **$CO_2e$** | - | - | - | | | | | | | | | | | | 0.00E+00 |
| **SSM-TO** | **mass GHG** | 852.77 | 0.82 | - | | | | | | | | | | | 853.60 | |
| | **$CO_2e$** | 852.77 | 20.62 | - | | | | | | | | | | | | 873.39 |
| **MSSM** | **mass GHG** | 0.94 | 10.88 | - | | | | | | | | | | | 11.82 | |
| | **$CO_2e$** | 0.94 | 271.95 | - | | | | | | | | | | | | 272.89 |
| **MSST** | **mass GHG** | - | 2.00E-07 | - | | | | | | | | | | | 2.00E-07 | |
| | **$CO_2e$** | - | 4.99E-06 | - | | | | | | | | | | | | 4.99E-06 |
| **MSSB** | **mass GHG** | - | - | - | | | | | | | | | | | 0.00E+00 | |
| | **$CO_2e$** | - | - | - | | | | | | | | | | | | 0.00E+00 |
| **Total** | **mass GHG** | 428,375.23 | 556.24 | 0.47 | | | | | | | | | | | 430,895 | |
| | **$CO_2e$** | 428,375.23 | 13,906.12 | 141.39 | | | | | | | | | | | | **444,393** |

[1] **GWP** (Global Warming Potential): Applicants must use the most current GWPs codified in Table A-1 of 40 CFR part 98. GWPs are subject to change, therefore, applicants need to check 40 CFR 98 to confirm GWP values.

[2] For **HFCs** or **PFCs** describe the specific HFC or PFC compound and use a separate column for each individual compound.

[3] For each new compound, enter the appropriate GWP for each HFC or PFC compound from Table A-1 in 40 CFR 98.

[4] Green house gas emissions on a **mass basis** is the ton per year green house gas emission before adjustment with its GWP.

[5] **$CO_2e$** means Carbon Dioxide Equivalent and is calculated by multiplying the TPY mass emissions of the green house gas by its GWP.

# Section 3

## Application Summary

---

The **Application Summary** shall include a brief description of the facility and its process, the type of permit application, the applicable regulation (i.e. 20.2.72.200.A.X, or 20.2.73 NMAC) under which the application is being submitted, and any air quality permit numbers associated with this site. If this facility is to be collocated with another facility, provide details of the other facility including permit number(s). In case of a revision or modification to a facility, provide the lowest level regulatory citation (i.e. 20.2.72.219.B.1.d NMAC) under which the revision or modification is being requested. Also describe the proposed changes from the original permit, how the proposed modification will affect the facility's operations and emissions, de-bottlenecking impacts, and changes to the facility's major/minor status (both PSD & Title V).

The **Process Summary** shall include a brief description of the facility and its processes.

**Startup, Shutdown, and Maintenance (SSM) routine or predictable emissions:** Provide an overview of how SSM emissions are accounted for in this application. Refer to "Guidance for Submittal of Startup, Shutdown, Maintenance Emissions in Permit Applications (http://www.env.nm.gov/aqb/permit/app_form.html) for more detailed instructions on SSM emissions.

---

Targa Resources, LLC (Targa) owns and operates the Road Runner Gas Processing Plant located near Loving in Eddy County, NM. Targa is submitting this application pursuant to 20.2.70.300.B(1) NMAC for an initial Title V permit.

The primary function of the Road Runner Gas Processing Plant is to separate natural gas (methane) from heavier (liquid) hydrocarbons, raw sweet field gas so that the gas can meet pipeline specifications. The plant has been designated a primary Standard Industrial Classification (SIC) Code of 1311. The gas is treated to remove $CO_2$, $H_2S$, water and heavy (liquid) hydrocarbons from the gas stream. Stabilized condensate is removed from the site via pipeline with the option to truck it out as needed. Produced water is trucked out from the site. The amine treater vent flows to a thermal oxidizer to remove volatile organic compounds (VOCs) and hazardous air pollutant (HAP) emissions.

# Section 4

## Process Flow Sheet

---

A **process flow sheet** and/or block diagram indicating the individual equipment, all emission points and types of control applied to those points. The unit numbering system should be consistent throughout this application.

---

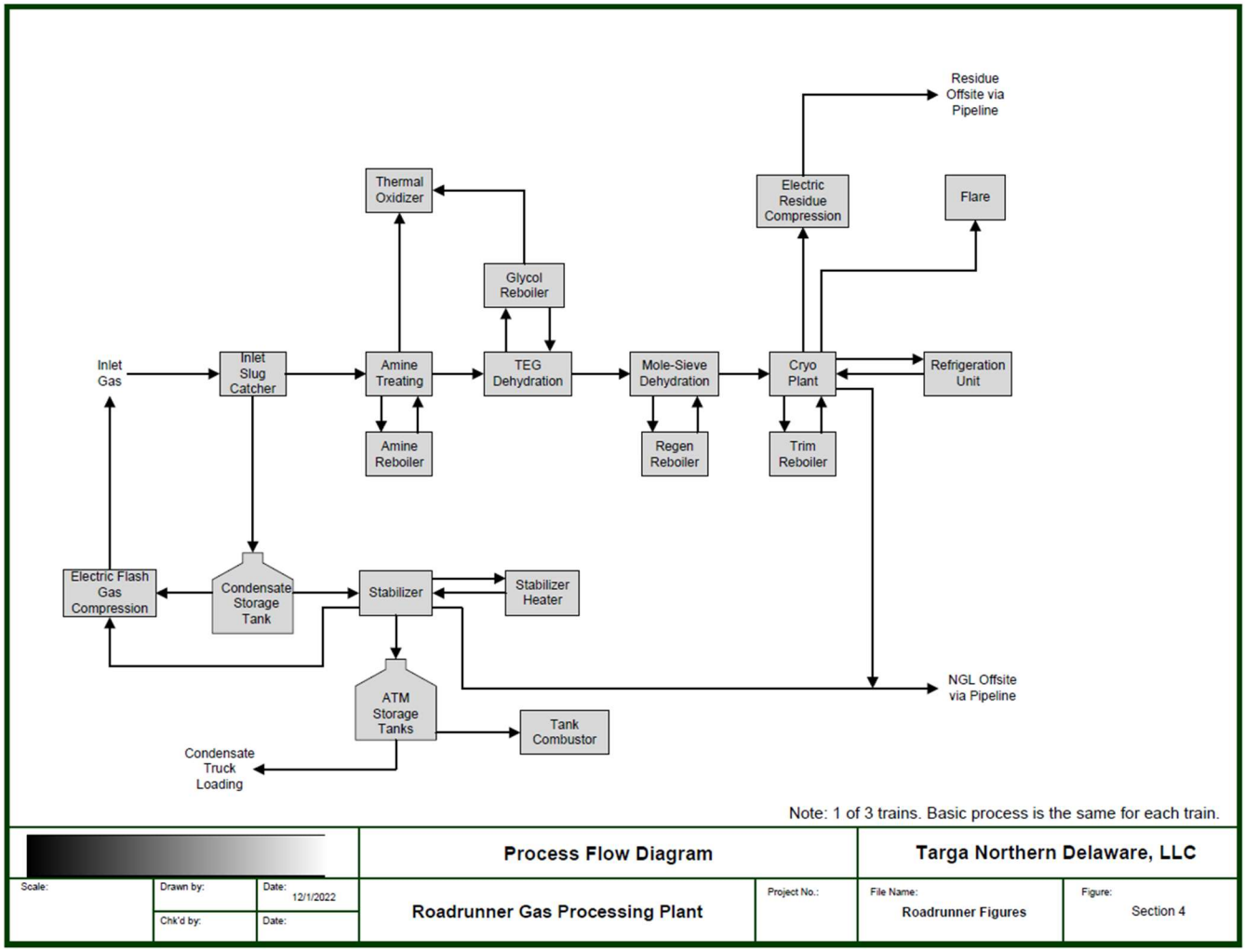

# Section 5

## Plot Plan Drawn to Scale

---

A **plot plan drawn to scale** showing emissions points, roads, structures, tanks, and fences of property owned, leased, or under direct control of the applicant. This plot plan must clearly designate the restricted area as defined in UA1, Section 1-D.12. The unit numbering system should be consistent throughout this application.

---

A plot plan is attached.

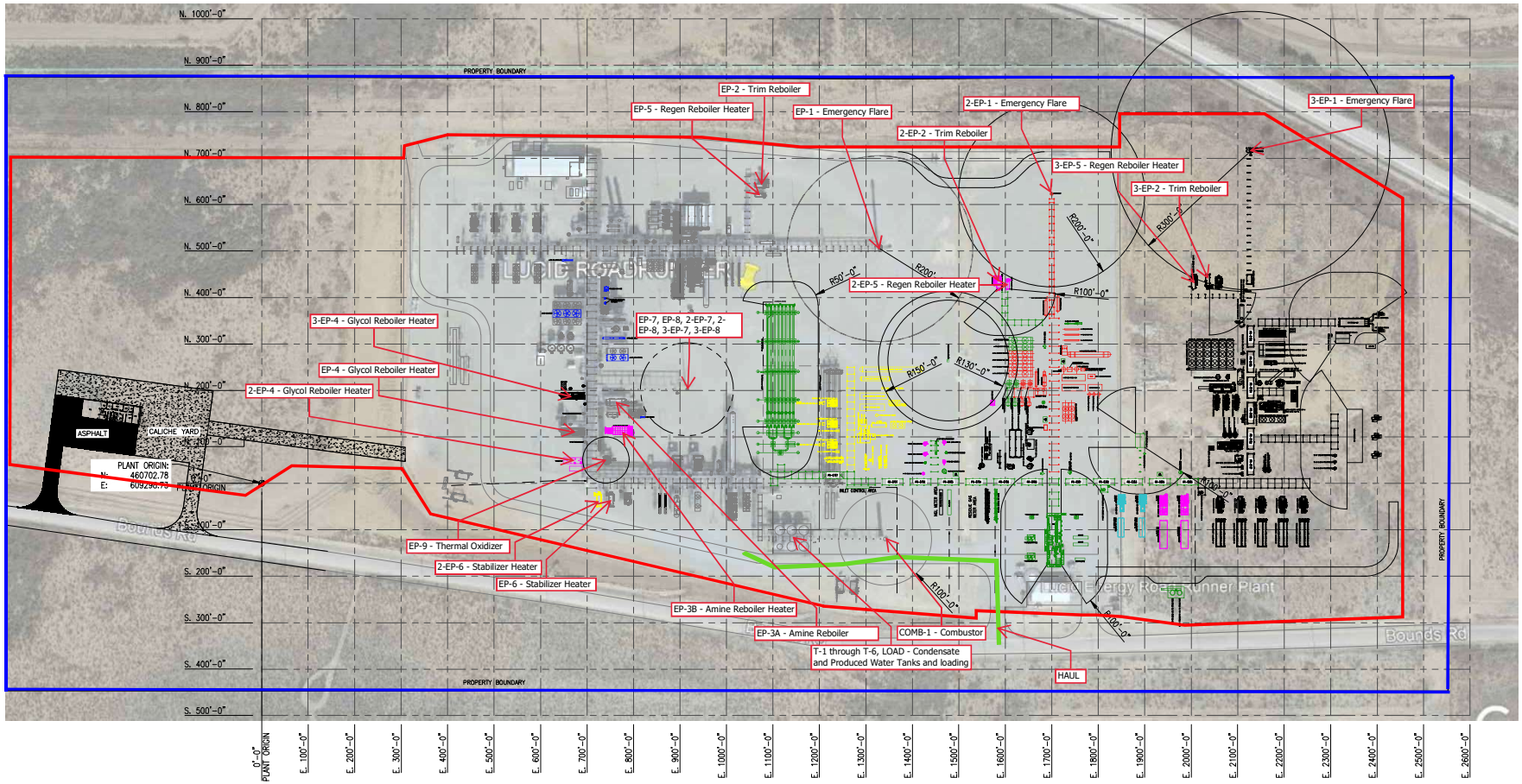


NOTES:
1. REFERENCE ELEVATION EXCLUDING GRAVEL: 3117'-9" = 100'-0"
2. COORDINATES GIVEN ARE BASED ON NAD83 NEW MEXICO EAST.

= SCOPE A – WOODSBORO EQUIPMENT MOVE
= SCOPE A – WOODSBORO EQUIPMENT RELATIVE LOCATION CHANGED
= SCOPE B – AMINE REGEN EQUIPMENT EXPANSION
= SCOPE C – BOP ADDITIONS RR 2
= FUTURE RR 3
= FUTURE STABILIZER EQUIPMENT
= LONE STAR RESIDUE COMPRESSORS

0 100' 200'
GRAPHIC SCALE: 1"=100'-0"

PLOT DATE: 2023-11-11

| REFERENCE DWGS. | REV | DESCRIPTION | DWN | CHKD | DATE | REV | DESCRIPTION | DWN | CHKD | DATE |
|---|---|---|---|---|---|---|---|---|---|---|
| | | | | | | | | | | |
| | | | | | | | | | | |
| | | | | | | | | | | |
| | | | | | | | | | | |
| | | | | | | 0 | ISSUED FOR CONSTRUCTION | AH | GSE | 04/11/23 |

This drawing is owned by a TARGA Resources, Inc. operating subsidiary and is loaned solely for confidential use. Recipient promises and agrees to return this drawing upon request and agrees that it shall not be reproduced, copied, loaned or otherwise disposed of, nor used for any purpose other than that for which it is furnished without express written consent. NO REPRESENTATION OR WARRANTY IS MADE REGARDING THE ACCURACY OF THIS DRAWING IN ANY PARTICULAR.

PREPARED BY: SELECT ENGINEERING
PROJECT NUMBER: 1532

| | | |
|---|---|---|
| SCALE: | NONE | |
| DWN BY: | MLD | 03/20/23 |
| CHKD BY: | AH | 04/11/23 |
| FINAL CK: | | |
| ENGR.: | | |
| APPR.: | GSE | 03/20/23 |
| APPR.: | | |

PLANT NAME: ROADRUNNER II GAS PLANT
EDDY COUNTY, NM

SELECT Engineering
NM Registered Engineering Firm ID# 6271908

ISTI DWG No.: 8091-0000-1001

TARGA

DRAWING NUMBER: 1532-100-E1
CADFILE NAME: RR2100E1
REVISION: 0

OVERALL SITE PLAN
200 MMSCFD GAS PLANT
ROADRUNNER II GAS PLANT

# Section 6

## All Calculations

---

**Show all calculations** used to determine both the hourly and annual controlled and uncontrolled emission rates. All calculations shall be performed keeping a minimum of three significant figures. Document the source of each emission factor used (if an emission rate is carried forward and not revised, then a statement to that effect is required). If identical units are being permitted and will be subject to the same operating conditions, submit calculations for only one unit and a note specifying what other units to which the calculations apply. All formulas and calculations used to calculate emissions must be submitted. The "Calculations" tab in the UA2 has been provided to allow calculations to be linked to the emissions tables. Add additional "Calc" tabs as needed. If the UA2 or other spread sheets are used, all calculation spread sheet(s) shall be submitted electronically in Microsoft Excel compatible format so that formulas and input values can be checked. Format all spread sheets and calculations such that the reviewer can follow the logic and verify the input values. Define all variables. If calculation spread sheets are not used, provide the original formulas with defined variables. Additionally, provide subsequent formulas showing the input values for each variable in the formula. All calculations, including those calculations are imbedded in the Calc tab of the UA2 portion of the application, the printed Calc tab(s), should be submitted under this section.

**Tank Flashing Calculations**: The information provided to the AQB shall include a discussion of the method used to estimate tank-flashing emissions, relative thresholds (i.e., NOI, permit, or major source (NSPS, PSD or Title V)), accuracy of the model, the input and output from simulation models and software, all calculations, documentation of any assumptions used, descriptions of sampling methods and conditions, copies of any lab sample analysis. If Hysis is used, all relevant input parameters shall be reported, including separator pressure, gas throughput, and all other relevant parameters necessary for flashing calculation.

**SSM Calculations**: It is the applicant's responsibility to provide an estimate of SSM emissions or to provide justification for not doing so. In this Section, provide emissions calculations for Startup, Shutdown, and Routine Maintenance (SSM) emissions listed in the Section 2 SSM and/or Section 22 GHG Tables and the rational for why the others are reported as zero (or left blank in the SSM/GHG Tables). Refer to "Guidance for Submittal of Startup, Shutdown, Maintenance Emissions in Permit Applications (http://www.env.nm.gov/aqb/permit/app_form.html) for more detailed instructions on calculating SSM emissions. If SSM emissions are greater than those reported in the Section 2, Requested Allowables Table, modeling may be required to ensure compliance with the standards whether the application is NSR or Title V. Refer to the Modeling Section of this application for more guidance on modeling requirements.

**Glycol Dehydrator Calculations**: The information provided to the AQB shall include the manufacturer's maximum design recirculation rate for the glycol pump. If GRI-Glycalc is used, the full input summary report shall be included as well as a copy of the gas analysis that was used.

**Road Calculations:** Calculate fugitive particulate emissions and enter haul road fugitives in Tables 2-A, 2-D and 2-E for:

1. If you transport raw material, process material and/or product into or out of or within the facility and have PER emissions greater than 0.5 tpy.
2. If you transport raw material, process material and/or product into or out of the facility more frequently than one round trip per day.

**Significant Figures:**

**A.** All emissions standards are deemed to have at least two significant figures, but not more than three significant figures.

**B.** At least 5 significant figures shall be retained in all intermediate calculations.

**C.** In calculating emissions to determine compliance with an emission standard, the following rounding off procedures shall be used:

**(1)** If the first digit to be discarded is less than the number 5, the last digit retained shall not be changed;

**(2)** If the first digit discarded is greater than the number 5, or if it is the number 5 followed by at least one digit other than the number zero, the last figure retained shall be increased by one unit; **and**

**(3)** If the first digit discarded is exactly the number 5, followed only by zeros, the last digit retained shall be rounded upward if it is an odd number, but no adjustment shall be made if it is an even number.

**(4)** The final result of the calculation shall be expressed in the units of the standard.

**Control Devices:** In accordance with 20.2.72.203.A(3) and (8) NMAC, 20.2.70.300.D(5)(b) and (e) NMAC, and 20.2.73.200.B(7) NMAC, the permittee shall report all control devices and list each pollutant controlled by the control device regardless if the applicant takes credit for the reduction in emissions. The applicant can indicate in this section of the application if they chose to not take credit for the reduction in emission rates. For notices of intent submitted under 20.2.73 NMAC, only uncontrolled emission rates can be considered to determine applicability unless the state or federal Acts require the control. This information is necessary to determine if federally enforceable conditions are necessary for the control device, and/or if the control device produces its own regulated pollutants or increases emission rates of other pollutants.

---

**Heaters and Reboilers**

The facility will be equipped with several heaters and reboilers of various heat input capacities. For units EP-2, EP-4, 2-EP-4, 3-EP-4, EP-5, 2-EP-5, 3-EP-5, EP-6, and 2-EP-6, AP-42 Chapter 1.4 *Natural Gas Combustion* was used to determine emissions of nitrogen oxides ($NO_x$), carbon monoxide (CO), volatile organic compounds (VOC), particulate matter (PM), and hazardous air pollutants (HAPs). Sulfur dioxide emissions were calculated stoichiometrically assuming that the natural gas used as fuel in the heaters and reboilers contains a maximum $H_2S$ content of 5 ppm based on pipeline specifications.

For unit EP-3B, manufacturer specifications were used to determine emissions of nitrogen oxides ($NO_x$), carbon monoxide (CO), volatile organic compounds (VOC), and particulate matter (PM). AP-42 Chapter 1.4 *Natural Gas Combustion* was used to determine emissions of hazardous air pollutants (HAPs). Sulfur dioxide emissions were calculated stoichiometrically assuming that the natural gas used as fuel in the heaters and reboilers contains a maximum $H_2S$ content of 5 ppm based on pipeline specifications.

For units 2-EP-2 and 3-EP-2, AP-42 Chapter 1.4 *Natural Gas Combustion* was used to determine emissions of carbon monoxide (CO), volatile organic compounds (VOC), particulate matter (PM), and hazardous air pollutants (HAPs). Sulfur dioxide emissions were calculated stoichiometrically assuming that the natural gas used as fuel in the heaters and reboilers contains a maximum $H_2S$ content of 5 ppm based on pipeline specifications. Emissions of nitrogen oxides ($NO_x$) are based on the emission factor presented in 20.2.50.119.B(1) NMAC to comply with 20.2.50.119.B(3) NMAC as these units will be considered new units and must comply upon startup.

Greenhouse gas emissions from all heaters and reboilers were calculated using 40 CFR 98 Subpart C Table C-1 and Table C-2.

**TEG Glycol Dehydrators**

BR&E ProMax was used to determine emissions from the glycol still vent and non-condensable overheads from the BTEX condenser. Emissions from EP-7, 2-EP-7, and 3-EP-7 are controlled by the thermal oxidizer with a 99.9% destruction efficiency. Controlled emissions from the glycol dehydrators are represented at EP-7, 2-EP-7, and 3-EP-7.

**Amine Units**

BR&E ProMax was used to determine emissions from the amine units. Contactor overheads are routed to the glycol dehydrators for further treatment. The regenerator overheads are routed to the thermal oxidizer with a 99.9% destruction efficiency, or the facility flare with a 98% destruction efficiency.

**Thermal Oxidizer**

The thermal oxidizer will control the waste gas from the glycol dehydrators as well as the waste gas from the amine units. Additional supplemental fuel is routed to the thermal oxidizer at a rate of 29,412 scf/hr. Emissions of nitrogen oxides ($NO_x$), carbon monoxide (CO), and particulate matter (PM) are based on manufacturer guaranteed emission factors. The thermal oxidizer operates with a destruction efficiency of 99.9%. Greenhouse gas emissions from the thermal oxidizer were calculated using 40 CFR 98 Subpart C Table C-1 and Table C-2.

**Thermal Oxidizer SSM**

The facility will conduct routine maintenance on the thermal oxidizer during which the thermal oxidizer will be taken offline, and emissions routed to the thermal oxidizer will instead be vented to atmosphere.

**Flares**

The flares at the facility (EP-1, 2-EP-1, and 3-EP-1) will flare both inlet and residue gas. The expected composition and maximum expected volumes of inlet gas and residue gas were used as the basis of the flare calculation. TNRCC RG-109 flare emission factors for low Btu gas were used to calculate emissions of nitrogen oxides ($NO_x$) and carbon monoxide (CO). VOC,

$H_2S$, and $SO_2$ emissions are calculated based on the VOC and $H_2S$ content of the inlet and residue gas. An assumed 98% destruction efficiency is applied to the VOC and $H_2S$ emissions. Greenhouse gas emissions from the flares were calculated using 40 CFR 98 Subpart C Table C-1 and Table C-2 with the methodology outlined in 40 CFR 98.233(n).

**Condensate Storage Tanks**

Emissions from condensate storage tanks, T-1 through T-5, were determined using BR&E ProMax and a site-specific condensate analysis, dated February 3, 2022. Emissions from the condensate tanks are controlled by a combustor with a 95% destruction efficiency.

**Produced Water Storage Tanks**

Emissions from the produced water storage tank, T-6, were determined using BR&E ProMax. Emissions from the produced water storage tank are uncontrolled and are vented to the atmosphere.

**Condensate Loading**

Condensate loading emissions were calculated using the loading loss equation and variables from AP-42 Section 5.2, *Transportation and Marketing of Petroleum Liquids*. True vapor pressure of loaded liquid, molecular weight of vapor, temperature of bulk liquid, and volatile organic compound (VOC), hazardous air pollutants (HAP), and hydrogen sulfide ($H_2S$) mass percentage were determined with BR&E ProMax. Condensate loading is vapor balanced with the condensate tanks with a 95% capture efficiency.

**Tank Combustor**

The tank combustor controls emissions from the condensate tanks, condensate loading vapor balance which is routed to the condensate tanks, tank MSS which includes tank cleanings at a frequency of five tank cleanings once per year with a duration of one hour, and blowdowns. The combustor operates with a destruction efficiency of 95%. Emissions of nitrogen oxides ($NO_x$), carbon monoxide (CO), and particulate matter (PM) were calculated using TNRCC RG-109 and AP-42 Table 1.4-1 and Table 1.4-2. Greenhouse gas emissions from the tank combustor were calculated using 40 CFR 98 Subpart C Table C-1 and Table C-2 with the methodology outlined in 40 CFR 98.233(n).

**Fugitives**

The emissions from fugitive components associated with this project are calculated using emission factors from Table 2-4 of the EPA Protocol for Equipment Leak Emission estimates, November 1995. Site specific analyses for inlet gas, residue gas, and condensate were used.

**Haul Road Emissions**

Unpaved haul road emissions were calculated using constants from AP-42 Table 13.2.2-2 and the methodology outlined in AP-42 Chapter 13.2.2.

**Miscellaneous MSS**

Miscellaneous MSS emissions include routine pigging activities, routine replacement of glycol solution used in dehydration units, routine replacement of solution used in amine units, use of aerosol lubricants, piping components, and calibration activities.

**MSS Blowdowns**

MSS Blowdown emissions include venting emissions from blowdowns, starter vents, and any gas operated controllers present at the facility, if any.

**Diesel Fired Generators (GEN-1 through GEN-12)**

Final Tier 4 Emissions Standards for Non-Road Engines for $NO_x$, CO, HC, and PM was used. Emission factors for HAP emissions and $SO_2$ were obtained from AP- 42 Section 3.4, *Large Stationary Diesel and All Stationary Dual-Fuel Engines*, (10/96), were used to calculate potential emissions for the new diesel generators. Greenhouse gas emissions from the thermal oxidizer were calculated using 40 CFR 98 Subpart C Table C-1 and Table C-2. Refer to the attached calculations for detailed documentation of emission factors.

TARGA

*Targa Midstream Services LLC - Roadrunner Gas Processing Plant*

# Emission Summary

**Controlled Emissions**

| | | $NO_X$ | | CO | | VOC | | $SO_2$ | | $TSP^2$ | | $PM_{10}^2$ | | $PM_{2.5}^2$ | | $H_2S$ | | Total HAP | | Benzene | | $CO_2$ | $CH_4$ | $N_2O$ | CO2e |
|---|---|---|---|---|---|---|---|---|---|---|---|---|---|---|---|---|---|---|---|---|---|---|---|---|---|
| **Unit ID** | **Equipment Description** | **lb/hr** | **ton/yr** | **lb/hr** | **ton/yr** | **lb/hr** | **ton/yr** | **lb/hr** | **ton/yr** | **lb/hr** | **ton/yr** | **lb/hr** | **ton/yr** | **lb/hr** | **ton/yr** | **lb/hr** | **ton/yr** | **lb/hr** | **ton/yr** | **lb/hr** | **ton/yr** | **ton/yr** | **ton/yr** | **ton/yr** | **ton/yr** |
| EP-2 | Trim Reboiler | 2.60 | 11.38 | 2.18 | 9.56 | 0.14 | 0.63 | 0.022 | 0.10 | 0.20 | 0.86 | 0.20 | 0.86 | 0.20 | 0.86 | - | - | 2.09E-03 | 9.16E-03 | 5.46E-05 | 2.39E-04 | 13,577.41 | 0.26 | 0.026 | 13,591.44 |
| 2-EP-2 | Trim Reboiler | 0.84 | 3.68 | 2.18 | 9.56 | 0.14 | 0.63 | 0.022 | 0.10 | 0.20 | 0.86 | 0.20 | 0.86 | 0.20 | 0.86 | - | - | 2.09E-03 | 9.16E-03 | 5.46E-05 | 2.39E-04 | 13,577.41 | 0.26 | 0.026 | 13,591.44 |
| 3-EP-2 | Trim Reboiler | 0.84 | 3.68 | 2.18 | 9.56 | 0.14 | 0.63 | 0.022 | 0.10 | 0.20 | 0.86 | 0.20 | 0.86 | 0.20 | 0.86 | - | - | 2.09E-03 | 9.16E-03 | 5.46E-05 | 2.39E-04 | 13,577.41 | 0.26 | 0.026 | 13,591.44 |
| EP-3A | Amine Reboiler | 2.23 | 9.77 | 4.53 | 19.83 | 0.38 | 1.66 | 0.058 | 0.26 | 0.52 | 2.29 | 0.52 | 2.29 | 0.52 | 2.29 | - | - | 5.55E-03 | 2.43E-02 | 1.45E-04 | 6.34E-04 | 36,008.32 | 0.68 | 0.068 | 36,045.51 |
| EP-3B | Amine Reboiler | 0.34 | 1.49 | 3.48 | 15.22 | 1.61 | 7.05 | 0.070 | 0.31 | 1.10 | 4.83 | 1.10 | 4.83 | 1.10 | 4.83 | - | - | 6.69E-03 | 2.93E-02 | - | - | 43,432.35 | 0.82 | 0.082 | 43,477.21 |
| EP-4 | Glycol Reboiler | 0.38 | 1.67 | 0.32 | 1.41 | 0.021 | 0.092 | 0.0032 | 0.01 | 0.029 | 0.13 | 0.029 | 0.13 | 0.029 | 0.13 | - | - | 3.08E-04 | 1.35E-03 | 8.03E-06 | 3.52E-05 | 1,998.19 | 0.04 | 0.0038 | 2,000.25 |
| 2-EP-4 | Glycol Reboiler | 0.38 | 1.67 | 0.32 | 1.41 | 0.021 | 0.092 | 0.0032 | 0.014 | 0.029 | 0.13 | 0.029 | 0.13 | 0.029 | 0.13 | - | - | 3.08E-04 | 1.35E-03 | 8.03E-06 | 3.52E-05 | 1,998.19 | 0.04 | 0.0038 | 2,000.25 |
| 3-EP-4 | Glycol Reboiler | 0.38 | 1.67 | 0.32 | 1.41 | 0.021 | 0.092 | 0.0032 | 0.014 | 0.029 | 0.13 | 0.029 | 0.13 | 0.029 | 0.13 | - | - | 3.08E-04 | 1.35E-03 | 8.03E-06 | 3.52E-05 | 1,998.19 | 0.04 | 0.0038 | 2,000.25 |
| EP-5 | Regen Reboiler | 0.93 | 4.08 | 0.78 | 3.43 | 0.05 | 0.22 | 0.0079 | 0.035 | 0.071 | 0.31 | 0.071 | 0.31 | 0.071 | 0.31 | - | - | 7.50E-04 | 3.28E-03 | 1.96E-05 | 8.57E-05 | 4,867.37 | 0.09 | 0.0092 | 4,872.40 |
| 2-EP-5 | Regen Reboiler | 0.93 | 4.08 | 0.78 | 3.43 | 0.05 | 0.22 | 0.0079 | 0.035 | 0.071 | 0.31 | 0.071 | 0.31 | 0.071 | 0.31 | - | - | 7.50E-04 | 3.28E-03 | 1.96E-05 | 8.57E-05 | 4,867.37 | 0.09 | 0.0092 | 4,872.40 |
| 3-EP-5 | Regen Reboiler | 0.93 | 4.08 | 0.78 | 3.43 | 0.05 | 0.22 | 0.0079 | 0.035 | 0.071 | 0.31 | 0.071 | 0.31 | 0.071 | 0.31 | - | - | 7.50E-04 | 3.28E-03 | 1.96E-05 | 8.57E-05 | 4,867.37 | 0.09 | 0.0092 | 4,872.40 |
| EP-6 | Stabilizer Heater | 2.29 | 10.05 | 1.93 | 8.44 | 0.13 | 0.55 | 0.019 | 0.09 | 0.17 | 0.76 | 0.17 | 0.76 | 0.17 | 0.76 | - | - | 1.85E-03 | 8.09E-03 | 4.82E-05 | 2.11E-04 | 11,989.11 | 0.23 | 0.023 | 12,001.49 |
| 2-EP-6 | Stabilizer Heater | 2.29 | 10.05 | 1.93 | 8.44 | 0.13 | 0.55 | 0.019 | 0.09 | 0.17 | 0.76 | 0.17 | 0.76 | 0.17 | 0.76 | - | - | 1.85E-03 | 8.09E-03 | 4.82E-05 | 2.11E-04 | 11,989.11 | 0.23 | 0.023 | 12,001.49 |
| EP-7 | Glycol Dehydrator (99.9% Control) | Emissions represented at the thermal oxidizer (Unit EP-9) | | | | | | | | | | | | | | | | | | | | | | | |
| 2-EP-7 | Glycol Dehydrator (99.9% Control) | Emissions represented at the thermal oxidizer (Unit EP-9) | | | | | | | | | | | | | | | | | | | | | | | |
| 3-EP-7 | Glycol Dehydrator (99.9% Control) | Emissions represented at the thermal oxidizer (Unit EP-9) | | | | | | | | | | | | | | | | | | | | | | | |
| EP-8 | Amine Vent (99.9% Control) | Emissions represented at the thermal oxidizer (Unit EP-9) | | | | | | | | | | | | | | | | | | | | | | | |
| 2-EP-8 | Amine Vent (99.9% Control) | Emissions represented at the thermal oxidizer (Unit EP-9) | | | | | | | | | | | | | | | | | | | | | | | |
| 3-EP-8 | Amine Vent (99.9% Control) | Emissions represented at the thermal oxidizer (Unit EP-9) | | | | | | | | | | | | | | | | | | | | | | | |
| EP-9 | Thermal Oxidizer | 6.12 | 26.81 | 2.98 | 13.05 | 0.53 | 2.32 | 26.66 | 116.79 | 0.60 | 2.63 | 0.60 | 2.63 | 0.60 | 2.63 | 0.014 | 0.062 | 0.28 | 1.24 | 0.13 | 0.58 | 38,426.64 | 0.72 | 0.072 | 38,466.33 |
| EP-1 | Flare (SSM) | 1,583.01 | 20.71 | 3,160.29 | 41.35 | 2,591.05 | 48.43 | 828.62 | 10.00 | - | - | - | - | - | - | 8.98 | 0.11 | 58.68 | 0.80 | - | - | 73,783.80 | 68.70 | 0.030 | 75,510.25 |
| 2-EP-1 | Flare (SSM) | 1,578.29 | 19.66 | 3,150.87 | 39.26 | 2,484.70 | 29.82 | 828.55 | 9.98 | - | - | - | - | - | - | 8.98 | 0.11 | 58.10 | 0.70 | - | - | 73,783.80 | 68.70 | 0.030 | 75,510.25 |
| 3-EP-1 | Flare (SSM) | 1,578.16 | 19.08 | 3,150.60 | 38.09 | 2,484.70 | 29.82 | 828.54 | 9.95 | - | - | - | - | - | - | 8.98 | 0.11 | 58.10 | 0.70 | - | - | 73,783.80 | 68.70 | 0.030 | 75,510.25 |
| GEN-1 | Diesel Fired Generator | 5.75 | 1.44 | 0.79 | 0.20 | 1.69 | 0.42 | 1.77 | 0.44 | 0.034 | 0.0084 | 0.034 | 0.0084 | 0.034 | 0.0084 | - | - | 0.023 | 5.65E-03 | 5.69E-03 | 1.42E-03 | 248.49 | 1.01E-02 | 2.02E-03 | 249.35 |
| GEN-2 | Diesel Fired Generator | 0.18 | 0.044 | 1.54 | 0.38 | 0.09 | 0.022 | 0.62 | 0.16 | 0.009 | 0.0022 | 0.009 | 0.0022 | 0.009 | 0.0022 | - | - | 0.0079 | 1.99E-03 | 2.00E-03 | 5.00E-04 | 87.40 | 3.55E-03 | 7.09E-04 | 87.70 |
| GEN-3 | Diesel Fired Generator | 0.33 | 0.083 | 2.86 | 0.72 | 0.16 | 0.040 | 1.16 | 0.29 | 0.017 | 0.0012 | 0.017 | 0.0012 | 0.017 | 0.0041 | - | - | 0.015 | 3.70E-03 | 3.72E-03 | 9.31E-04 | 162.73 | 6.60E-03 | 1.32E-03 | 163.29 |
| GEN-4 | Diesel Fired Generator | 0.33 | 0.083 | 2.86 | 0.72 | 0.16 | 0.040 | 1.16 | 0.29 | 0.017 | 0.0041 | 0.017 | 0.0012 | 0.017 | 0.0041 | - | - | 0.015 | 3.70E-03 | 3.72E-03 | 9.31E-04 | 162.73 | 6.60E-03 | 1.32E-03 | 163.29 |
| GEN-5 | Diesel Fired Generator | 0.33 | 0.083 | 2.86 | 0.72 | 0.16 | 0.040 | 1.16 | 0.29 | 0.017 | 0.0041 | 0.017 | 0.0012 | 0.017 | 0.0041 | - | - | 0.015 | 3.70E-03 | 3.72E-03 | 9.31E-04 | 162.73 | 6.60E-03 | 1.32E-03 | 163.29 |
| GEN-6 | Diesel Fired Generator | 0.33 | 0.083 | 2.86 | 0.72 | 0.16 | 0.040 | 1.16 | 0.29 | 0.017 | 0.0041 | 0.017 | 0.0012 | 0.017 | 0.0041 | - | - | 0.015 | 3.70E-03 | 3.72E-03 | 9.31E-04 | 162.73 | 6.60E-03 | 1.32E-03 | 163.29 |
| GEN-7 | Diesel Fired Generator | 0.33 | 0.083 | 2.86 | 0.72 | 0.16 | 0.040 | 1.16 | 0.29 | 0.017 | 0.0041 | 0.017 | 0.0012 | 0.017 | 0.0041 | - | - | 0.015 | 3.70E-03 | 3.72E-03 | 9.31E-04 | 162.73 | 6.60E-03 | 1.32E-03 | 163.29 |
| GEN-8 | Diesel Fired Generator | 0.33 | 0.083 | 2.86 | 0.72 | 0.16 | 0.040 | 1.16 | 0.29 | 0.017 | 0.0041 | 0.017 | 0.0012 | 0.017 | 0.0041 | - | - | 0.015 | 3.70E-03 | 3.72E-03 | 9.31E-04 | 162.73 | 6.60E-03 | 1.32E-03 | 163.29 |
| GEN-9 | Diesel Fired Generator | 0.33 | 0.083 | 2.86 | 0.72 | 0.16 | 0.040 | 1.16 | 0.29 | 0.017 | 0.0041 | 0.017 | 0.0012 | 0.017 | 0.0041 | - | - | 0.015 | 3.70E-03 | 3.72E-03 | 9.31E-04 | 162.73 | 6.60E-03 | 1.32E-03 | 163.29 |
| GEN-10 | Diesel Fired Generator | 0.33 | 0.083 | 2.86 | 0.72 | 0.16 | 0.040 | 1.16 | 0.29 | 0.017 | 0.0041 | 0.017 | 0.0012 | 0.017 | 0.0041 | - | - | 0.015 | 3.70E-03 | 3.72E-03 | 9.31E-04 | 162.73 | 6.60E-03 | 1.32E-03 | 163.29 |
| GEN-11 | Diesel Fired Generator | 0.33 | 0.083 | 2.86 | 0.72 | 0.16 | 0.040 | 1.16 | 0.29 | 0.017 | 0.0041 | 0.017 | 0.0012 | 0.017 | 0.0041 | - | - | 0.015 | 3.70E-03 | 3.72E-03 | 9.31E-04 | 162.73 | 6.60E-03 | 1.32E-03 | 163.29 |
| GEN-12 | Diesel Fired Generator | 0.33 | 0.083 | 2.86 | 0.72 | 0.16 | 0.040 | 1.16 | 0.29 | 0.017 | 0.0041 | 0.017 | 0.0012 | 0.017 | 0.0041 | - | - | 0.015 | 3.70E-03 | 3.72E-03 | 9.31E-04 | 162.73 | 6.60E-03 | 1.32E-03 | 163.29 |
| T-1 | Condensate Storage Tank (95% Control) | Emissions represented at the combustor (Unit COMB-1) | | | | | | | | | | | | | | | | | | | | | | | |
| T-2 | Condensate Storage Tank (95% Control) | Emissions represented at the combustor (Unit COMB-1) | | | | | | | | | | | | | | | | | | | | | | | |
| T-3 | Condensate Storage Tank (95% Control) | Emissions represented at the combustor (Unit COMB-1) | | | | | | | | | | | | | | | | | | | | | | | |
| T-4 | Condensate Storage Tank (95% Control) | Emissions represented at the combustor (Unit COMB-1) | | | | | | | | | | | | | | | | | | | | | | | |
| T-5 | Condensate Storage Tank (95% Control) | Emissions represented at the combustor (Unit COMB-1) | | | | | | | | | | | | | | | | | | | | | | | |
| T-6 | Waste Water Tank | - | - | - | - | 0.14 | 0.63 | - | - | - | - | - | - | - | - | 0.0052 | 0.010 | 0.0050 | 0.022 | 0.0036 | 0.02 | 1.06 | 1.01 | - | 26.32 |
| COMB-1 | Tank Combustor | 7.73 | 3.08 | 15.43 | 6.16 | 37.59 | 4.26 | 0.16 | 0.0038 | 0.42 | 0.17 | 0.42 | 0.17 | 0.42 | 0.17 | 3.53E-03 | 6.11E-04 | 3.43 | 4.74 | 3.43 | 4.74 | 2,990.01 | 0.02 | 1.50E-03 | 2,990.92 |
| LOAD | Condensate Loading Emissions | - | - | - | - | 12.88 | 54.41 | - | - | - | - | - | - | - | - | - | - | 1.16 | 4.58 | - | - | - | - | - | - |
| FUG | Fugitive Emissions | - | - | - | - | 25.29 | 110.76 | - | - | - | - | - | - | - | - | 7.01E-04 | 3.07E-03 | 1.41 | 6.19 | 0.12 | 0.51 | 4.58 | 333.58 | 0.00E+00 | 8,344.17 |
| HAUL | Haul | - | - | - | - | - | - | - | - | 0.41 | 1.46 | 0.11 | 0.37 | 0.011 | 0.037 | - | - | - | - | - | - | - | - | - | - |
| SSM-TO | SSM Thermal Oxidizer | - | - | - | - | 326.15 | 3.26 | - | - | - | - | - | - | - | - | 14.17 | 0.14 | 216.77 | 2.17 | - | - | 852.77 | 0.82 | - | 873.39 |
| MSSM | MSS Miscellaneous | - | - | - | - | 277.95 | 4.12 | - | - | - | - | - | - | - | - | 1.08E-02 | 1.61E-04 | 15.05 | 0.22 | - | - | 0.94 | 10.88 | - | 272.89 |
| MSST | Tank Degassing | - | - | - | - | 38.16 | 0.03 | - | - | - | - | - | - | - | - | - | - | 20.01 | 2.85E-03 | 16.75 | 1.38E-04 | - | 2.00E-07 | - | 4.99E-06 |
| MSSB | MSS Blowdowns | Emissions represented at the combustor (Unit COMB-1) | | | | | | | | | | | | | | | | | | | | | | | |
| **Totals** | | **4,777.91** | **159.02** | **9,532.80** | **240.75** | **8,285.43** | **301.36** | **2,526.76** | **151.38** | **4.50** | **16.86** | **4.20** | **15.74** | **4.10** | **15.44** | **41.15** | **0.54** | **433.19** | **21.52** | **20.48** | **5.86** | **430,338.40** | **556.32** | **0.49** | **444,392.66** |
| **Totals without Fugitives** | | **4,777.91** | **159.02** | **9,532.80** | **240.75** | **8,260.14** | **190.60** | **2,526.76** | **151.38** | **4.50** | **16.86** | **4.20** | **15.74** | **4.10** | **15.44** | **41.15** | **0.54** | **431.78** | **15.33** | **20.36** | **5.35** | **430,333.82** | **222.74** | **0.49** | **436,048.49** |

**Uncontrolled Emissions**

| Unit ID | Equipment Description | $NO_X$ | | CO | | VOC | | $SO_2$ | | $TSP^2$ | | $PM_{10}^2$ | | $PM_{2.5}^2$ | | $H_2S$ | | Total HAP | | Benzene | | $CO_2$ | $CH_4$ | $N_2O$ | CO2e |
|---|---|---|---|---|---|---|---|---|---|---|---|---|---|---|---|---|---|---|---|---|---|---|---|---|---|
| | | lb/hr | ton/yr | lb/hr | ton/yr | lb/hr | ton/yr | lb/hr | ton/yr | lb/hr | ton/yr | lb/hr | ton/yr | lb/hr | ton/yr | lb/hr | ton/yr | lb/hr | ton/yr | lb/hr | ton/yr | ton/yr | ton/yr | ton/yr | ton/yr |
| EP-2 | Trim Reboiler | 2.60 | 11.38 | 2.18 | 9.56 | 0.14 | 0.63 | 0.022 | 0.10 | 0.20 | 0.86 | 0.20 | 0.86 | 0.20 | 0.86 | - | - | 2.09E-03 | 9.16E-03 | 5.46E-05 | 2.39E-04 | 13,577.41 | 0.26 | 0.026 | 13,591.44 |
| 2-EP-2 | Trim Reboiler | 0.84 | 3.68 | 2.18 | 9.56 | 0.14 | 0.63 | 0.022 | 0.10 | 0.20 | 0.86 | 0.20 | 0.86 | 0.20 | 0.86 | - | - | 2.09E-03 | 9.16E-03 | 5.46E-05 | 2.39E-04 | 13,577.41 | 0.26 | 0.026 | 13,591.44 |
| 3-EP-2 | Trim Reboiler | 0.84 | 3.68 | 2.18 | 9.56 | 0.14 | 0.63 | 0.022 | 0.10 | 0.20 | 0.86 | 0.20 | 0.86 | 0.20 | 0.86 | - | - | 2.09E-03 | 9.16E-03 | 5.46E-05 | 2.39E-04 | 13,577.41 | 0.26 | 0.026 | 13,591.44 |
| EP-3A | Amine Reboiler | 2.23 | 9.77 | 4.53 | 19.83 | 0.38 | 1.66 | 0.058 | 0.26 | 0.52 | 2.29 | 0.52 | 2.29 | 0.52 | 2.29 | - | - | 5.55E-03 | 2.43E-02 | 1.45E-04 | 6.34E-04 | 36,008.32 | 0.68 | 0.068 | 36,045.51 |
| EP-3B | Amine Reboiler | 0.34 | 1.49 | 3.48 | 15.22 | 1.61 | 7.05 | 0.070 | 0.31 | 1.10 | 4.83 | 1.10 | 4.83 | 1.10 | 4.83 | - | - | 6.69E-03 | 2.93E-02 | - | - | 43,432.35 | 0.82 | 0.082 | 43,477.21 |
| EP-4 | Glycol Reboiler | 0.38 | 1.67 | 0.32 | 1.41 | 0.02 | 0.09 | 0.0032 | 0.014 | 0.029 | 0.13 | 0.029 | 0.13 | 0.029 | 0.13 | - | - | 3.08E-04 | 1.35E-03 | 8.03E-06 | 3.52E-05 | 1,998.19 | 0.038 | 0.0038 | 2,000.25 |
| 2-EP-4 | Glycol Reboiler | 0.38 | 1.67 | 0.32 | 1.41 | 0.02 | 0.09 | 0.0032 | 0.014 | 0.029 | 0.13 | 0.029 | 0.13 | 0.029 | 0.13 | - | - | 3.08E-04 | 1.35E-03 | 8.03E-06 | 3.52E-05 | 1,998.19 | 0.038 | 0.0038 | 2,000.25 |
| 3-EP-4 | Glycol Reboiler | 0.38 | 1.67 | 0.32 | 1.41 | 0.02 | 0.09 | 0.0032 | 0.014 | 0.029 | 0.13 | 0.029 | 0.13 | 0.029 | 0.13 | - | - | 3.08E-04 | 1.35E-03 | 8.03E-06 | 3.52E-05 | 1,998.19 | 0.038 | 0.0038 | 2,000.25 |
| EP-5 | Regen Reboiler | 0.93 | 4.08 | 0.78 | 3.43 | 0.05 | 0.22 | 0.0079 | 0.035 | 0.071 | 0.31 | 0.071 | 0.31 | 0.071 | 0.31 | - | - | 7.50E-04 | 3.28E-03 | 1.96E-05 | 8.57E-05 | 4,867.37 | 0.092 | 0.0092 | 4,872.40 |
| 2-EP-5 | Regen Reboiler | 0.93 | 4.08 | 0.78 | 3.43 | 0.05 | 0.22 | 0.0079 | 0.035 | 0.071 | 0.31 | 0.071 | 0.31 | 0.071 | 0.31 | - | - | 7.50E-04 | 3.28E-03 | 1.96E-05 | 8.57E-05 | 4,867.37 | 0.092 | 0.0092 | 4,872.40 |
| 3-EP-5 | Regen Reboiler | 0.93 | 4.08 | 0.78 | 3.43 | 0.05 | 0.22 | 0.008 | 0.035 | 0.071 | 0.31 | 0.071 | 0.31 | 0.071 | 0.31 | - | - | 7.50E-04 | 3.28E-03 | 1.96E-05 | 8.57E-05 | 4,867.37 | 0.092 | 0.0092 | 4,872.40 |
| EP-6 | Stabilizer Heater | 2.29 | 10.05 | 1.93 | 8.44 | 0.13 | 0.55 | 0.019 | 0.085 | 0.17 | 0.76 | 0.17 | 0.76 | 0.17 | 0.76 | - | - | 1.85E-03 | 8.09E-03 | 4.82E-05 | 2.11E-04 | 11,989.11 | 0.23 | 0.023 | 12,001.49 |
| 2-EP-6 | Stabilizer Heater | 2.29 | 10.05 | 1.93 | 8.44 | 0.13 | 0.55 | 0.019 | 0.085 | 0.17 | 0.76 | 0.17 | 0.76 | 0.17 | 0.76 | - | - | 1.85E-03 | 8.09E-03 | 4.82E-05 | 2.11E-04 | 11,989.11 | 0.23 | 0.023 | 12,001.49 |
| EP-7 | Glycol Dehydrator (99.9% Control) | - | - | - | - | 102.15 | 447.40 | - | - | - | - | - | - | - | - | 2.15E-05 | 9.42E-05 | 33.28 | 145.74 | 14.19 | 62.16 | - | 20.09 | - | 502.18 |
| 2-EP-7 | Glycol Dehydrator (99.9% Control) | - | - | - | - | 102.15 | 447.40 | - | - | - | - | - | - | - | - | 2.15E-05 | 9.42E-05 | 33.28 | 145.75 | 14.19 | 62.15 | - | 20.12 | - | 502.99 |
| 3-EP-7 | Glycol Dehydrator (99.9% Control) | - | - | - | - | 102.15 | 447.40 | - | - | - | - | - | - | - | - | 2.15E-05 | 9.42E-05 | 33.28 | 145.74 | 14.19 | 62.16 | - | 20.09 | - | 502.18 |
| EP-8 | Amine Vent (99.9% Control) | - | - | - | - | 74.67 | 327.04 | - | - | - | - | - | - | - | - | 4.72 | 20.68 | 61.17 | 267.90 | - | - | 124,504.53 | 114.30 | - | 127,361.95 |
| 2-EP-8 | Amine Vent (99.9% Control) | - | - | - | - | 74.67 | 327.04 | - | - | - | - | - | - | - | - | 4.72 | 20.68 | 61.17 | 267.90 | - | - | 124,504.53 | 114.30 | - | 127,361.95 |
| GEN-1 | Diesel Fired Generator | 5.75 | 1.44 | 0.79 | 0.20 | 1.69 | 0.42 | 1.77 | 0.44 | 0.034 | 0.0084 | 0.034 | 0.0084 | 0.034 | 0.0084 | - | - | 0.0226 | 0.0056 | 0.0057 | 0.0014 | 248.49 | 1.01E-02 | 2.02E-03 | 249.35 |
| GEN-2 | Diesel Fired Generator | 0.18 | 0.04 | 1.54 | 0.38 | 0.09 | 0.02 | 0.62 | 0.16 | 0.009 | 0.0022 | 0.009 | 0.0022 | 0.009 | 0.0022 | - | - | 7.94E-03 | 1.99E-03 | 2.00E-03 | 5.00E-04 | 87.40 | 3.55E-03 | 7.09E-04 | 87.70 |
| GEN-3 | Diesel Fired Generator | 0.33 | 0.08 | 2.86 | 0.72 | 0.16 | 0.04 | 1.16 | 0.29 | 0.017 | 0.0012 | 0.017 | 0.0012 | 0.017 | 0.0041 | - | - | 0.015 | 3.70E-03 | 3.72E-03 | 9.31E-04 | 162.73 | 6.60E-03 | 1.32E-03 | 163.29 |
| GEN-4 | Diesel Fired Generator | 0.33 | 0.08 | 2.86 | 0.72 | 0.16 | 0.04 | 1.16 | 0.29 | 0.017 | 0.0041 | 0.017 | 0.0012 | 0.017 | 0.0041 | - | - | 0.015 | 3.70E-03 | 3.72E-03 | 9.31E-04 | 162.73 | 6.60E-03 | 1.32E-03 | 163.29 |
| GEN-5 | Diesel Fired Generator | 0.33 | 0.08 | 2.86 | 0.72 | 0.16 | 0.04 | 1.16 | 0.29 | 0.017 | 0.0041 | 0.017 | 0.0012 | 0.017 | 0.0041 | - | - | 0.015 | 3.70E-03 | 3.72E-03 | 9.31E-04 | 162.73 | 6.60E-03 | 1.32E-03 | 163.29 |
| GEN-6 | Diesel Fired Generator | 0.33 | 0.08 | 2.86 | 0.72 | 0.16 | 0.04 | 1.16 | 0.29 | 0.017 | 0.0041 | 0.017 | 0.0012 | 0.017 | 0.0041 | - | - | 0.015 | 3.70E-03 | 3.72E-03 | 9.31E-04 | 162.73 | 6.60E-03 | 1.32E-03 | 163.29 |
| GEN-7 | Diesel Fired Generator | 0.33 | 0.08 | 2.86 | 0.72 | 0.16 | 0.04 | 1.16 | 0.29 | 0.017 | 0.0041 | 0.017 | 0.0012 | 0.017 | 0.0041 | - | - | 0.015 | 3.70E-03 | 3.72E-03 | 9.31E-04 | 162.73 | 6.60E-03 | 1.32E-03 | 163.29 |
| GEN-8 | Diesel Fired Generator | 0.33 | 0.08 | 2.86 | 0.72 | 0.16 | 0.04 | 1.16 | 0.29 | 0.017 | 0.0041 | 0.017 | 0.0012 | 0.017 | 0.0041 | - | - | 0.015 | 3.70E-03 | 3.72E-03 | 9.31E-04 | 162.73 | 6.60E-03 | 1.32E-03 | 163.29 |
| GEN-9 | Diesel Fired Generator | 0.33 | 0.08 | 2.86 | 0.72 | 0.16 | 0.04 | 1.16 | 0.29 | 0.017 | 0.0041 | 0.017 | 0.0012 | 0.017 | 0.0041 | - | - | 0.015 | 3.70E-03 | 3.72E-03 | 9.31E-04 | 162.73 | 6.60E-03 | 1.32E-03 | 163.29 |
| GEN-10 | Diesel Fired Generator | 0.33 | 0.08 | 2.86 | 0.72 | 0.16 | 0.04 | 1.16 | 0.29 | 0.017 | 0.0041 | 0.017 | 0.0012 | 0.017 | 0.0041 | - | - | 0.015 | 3.70E-03 | 3.72E-03 | 9.31E-04 | 162.73 | 6.60E-03 | 1.32E-03 | 163.29 |
| GEN-11 | Diesel Fired Generator | 0.33 | 0.08 | 2.86 | 0.72 | 0.16 | 0.04 | 1.16 | 0.29 | 0.017 | 0.0041 | 0.017 | 0.0012 | 0.017 | 0.0041 | - | - | 0.015 | 3.70E-03 | 3.72E-03 | 9.31E-04 | 162.73 | 6.60E-03 | 1.32E-03 | 163.29 |
| GEN-12 | Diesel Fired Generator | 0.33 | 0.08 | 2.86 | 0.72 | 0.16 | 0.04 | 1.16 | 0.29 | 0.017 | 0.0041 | 0.017 | 0.0012 | 0.017 | 0.0041 | - | - | 0.015 | 3.70E-03 | 3.72E-03 | 9.31E-04 | 162.73 | 6.60E-03 | 1.32E-03 | 163.29 |
| T-5 | Condensate Storage Tank (95% Control) | - | - | - | - | 32.12 | 16.87 | - | - | - | - | - | - | - | - | 3.77E-03 | 2.35E-03 | 2.89 | 1.42 | - | - | - | - | - | - |
| T-6 | Waste Water Tank | - | - | - | - | 0.14 | 0.63 | - | - | - | - | - | - | - | - | 0.0052 | 0.010 | 0.0050 | 0.022 | 0.0036 | 0.016 | 1.06 | 1.01 | - | 26.32 |
| COMB-1 | Tank Combustor | - | - | - | - | - | - | - | - | - | - | - | - | - | - | - | - | - | - | - | - | 2,990.01 | 0.018 | 1.50E-03 | 2,990.92 |
| LOAD | Condensate Loading Emissions | - | - | - | - | 257.50 | 1,088.27 | - | - | - | - | - | - | - | - | - | - | 23.116 | 91.63 | - | - | - | - | - | - |
| FUG | Fugitive Emissions | - | - | - | - | 25.29 | 110.76 | - | - | - | - | - | - | - | - | 0.00 | 0.00 | 1.41 | 6.19 | - | - | 4.58 | 333.58 | 0.00E+00 | 8,344.17 |
| HAUL | Haul | - | - | - | - | - | - | - | - | 0.41 | 1.46 | 0.11 | 0.37 | 0.011 | 0.037 | - | - | - | - | - | - | - | - | - | - |
| SSM-TO | SSM Thermal Oxidizer | - | - | - | - | 326.15 | 3.26 | - | - | - | - | - | - | - | - | 14.17 | 0.14 | 216.77 | 2.17 | - | - | 852.77 | 0.82 | - | 873.39 |
| MSSM | MSS Miscellaneous | - | - | - | - | 277.95 | 4.12 | - | - | - | - | - | - | - | - | - | - | - | - | - | - | - | - | - | - |
| MSST | Tank Degassing | - | - | - | - | 38.16 | 0.03 | - | - | - | - | - | - | - | - | - | - | 20.01 | 2.85E-03 | 16.75 | 1.38E-04 | - | 2.00E-07 | - | 4.99E-06 |
| MSSB | MSS Blowdowns | - | - | - | - | 590.99 | 11.82 | - | - | - | - | - | - | - | - | - | - | 1.17 | 0.012 | 32.16 | 0.64 | - | - | - | - |
| **Totals** | | **25.02** | **71.50** | **53.47** | **106.48** | **2,213.51** | **3,640.05** | **14.25** | **4.74** | **3.49** | **14.07** | **3.18** | **12.95** | **3.08** | **12.64** | **28.36** | **62.21** | **560.44** | **1,348.22** | **91.53** | **187.13** | **544,073.00** | **741.81** | **0.33** | **562,715.88** |

*Targa Midstream Services LLC - Roadrunner Gas Processing Plant*

# Heaters

Emission Unit: **EP-3B**

Description:

| | | |
|---|---|---|
| Heater/Boiler rating (MMBtu/hr): | 84.77 | |
| Rating above is **(select from list)**: | *below 100 MMBtu/hr, uncontrolled* | (assume uncontrolled, unless specifically stated otherwise) |
| Operating hours/year: | 8,760 | |
| Fuel Heat Value, LHV (Btu/SCF): | 1020.0 | |

| pollutant | emission factor (lb/MMBTU) | lb/hr | tpy |
|---|---|---|---|
| VOC | 0.019 | 1.611 | 7.055 |
| NOx | **0.004** | 0.339 | 1.485 |
| CO | 0.041 | 3.476 | 15.223 |
| PM | 0.013 | 1.102 | 4.827 |
| Benzene | 2.10E-03 | 1.75E-04 | 7.64E-04 |
| Toluene | 3.40E-03 | 2.83E-04 | 1.24E-03 |
| Formaldehyde | 7.50E-02 | 6.23E-03 | 2.73E-02 |
| $SO_2$ | 0 | 0.00E+00 | 0.00E+00 |

**If the heater/boiler is fueled by Sour Gas, <u>cannot</u> use emission factors above to calculate $SO_2$ emissions, must use $SO_2$ mass balance:**

| **$SO_2$ Mass Balance calculation:** | |
|---|---|
| **Fuel $H_2S$ content (mol %) =** | **0.0005** |
| **$SO_2$ produced (lb/hr) =** | **0.0703** |
| **$SO_2$ produced (tpy) =** | **0.3080** |

| assumptions: | | |
|---|---|---|
| SO2 MW | 64.06 | lb/lb-mole |
| Ideal Gas Law | 378.61 | SCF/lb-mole |

**EP-2 Emissions Calculations (fueled by natural gas)**

| | | |
|---|---|---|
| Heater/Boiler rating (MMBtu/hr): | 26.5 | |
| Rating above is **(select from list)**: | *below 100 MMBtu/hr, uncontrolled* | (assume uncontrolled, unless specifically stated otherwise) |
| Operating hours/year: | 8760 | |
| Fuel Heat Value, LHV (Btu/SCF): | 1020.0 | |

| pollutant | emission factor (lb/MMCF) | lb/hr | tpy |
|---|---|---|---|
| VOC | 5.5 | 0.143 | 0.626 |
| NOx | **100** | 2.598 | 11.379 |
| CO | 84 | 2.182 | 9.559 |
| PM | 7.6 | 0.197 | 0.865 |
| Benzene | 2.10E-03 | 5.46E-05 | 2.39E-04 |
| Toluene | 3.40E-03 | 8.83E-05 | 3.87E-04 |
| Formaldehyde | 7.50E-02 | 1.95E-03 | 8.53E-03 |
| $SO_2$ | 0 | 0.00E+00 | 0.00E+00 |

**If the heater/boiler is fueled by Sour Gas, <u>cannot</u> use emission factors above to calculate $SO_2$ emissions, must use $SO_2$ mass balance:**

| **$SO_2$ Mass Balance calculation:** | |
|---|---|
| **Fuel $H_2S$ content (mol %) =** | **0.0005** |
| **$SO_2$ produced (lb/hr) =** | **0.0220** |
| **$SO_2$ produced (tpy) =** | **0.0963** |

| assumptions: | | |
|---|---|---|
| SO2 MW | 64.06 | lb/lb-mole |
| Ideal Gas Law | 378.61 | SCF/lb-mole |

**2-EP-2, 3-EP-2 and Emissions Calculations (fueled by natural gas)**

| | | |
|---|---|---|
| Heater/Boiler rating (MMBtu/hr): | 26.5 | |
| Flow Rate (dscfm): | 3846.92 | |
| Rating above is **(select from list)**: | *below 100 MMBtu/hr, uncontrolled* | (assume uncontrolled, unless specifically stated otherwise) |
| Operating hours/year: | 8760 | |
| Fuel Heat Value, LHV (Btu/SCF): | 1020.0 | |

| pollutant | emission factor (lb/MMCF) | emission factor (ppmv) | lb/hr | tpy |
|---|---|---|---|---|
| VOC | 5.5 | | 0.143 | 0.626 |
| NOx | | **30** | 0.841 | 3.685 |
| CO | 84 | | 2.182 | 9.559 |
| PM | 7.6 | | 0.197 | 0.865 |
| Benzene | 2.10E-03 | | 5.46E-05 | 2.39E-04 |
| Toluene | 3.40E-03 | | 8.83E-05 | 3.87E-04 |
| Formaldehyde | 7.50E-02 | | 1.95E-03 | 8.53E-03 |
| $SO_2$ | 0 | | 0.00E+00 | 0.00E+00 |

**If the heater/boiler is fueled by Sour Gas, cannot use emission factors above to calculate $SO_2$ emissions, must use $SO_2$ mass balance:**

| **$SO_2$ Mass Balance calculation:** | |
|---|---|
| **Fuel $H_2S$ content (mol %) =** | **0.0005** |
| **$SO_2$ produced (lb/hr) =** | **0.0220** |
| **$SO_2$ produced (tpy) =** | **0.0963** |

| assumptions: | | |
|---|---|---|
| SO2 MW | 64.06 | lb/lb-mole |
| NO2 MW | 46 | lb/lb-mole |
| CO MW | 28 | lb/lb-mole |
| Ideal Gas Law | 378.61 | SCF/lb-mole |
| $F_d^2$ | 8710 | dscf/MMBtu |

**EP-3A Emissions Calculations (fueled by natural gas)**

| | | |
|---|---|---|
| Heater/Boiler rating (MMBtu/hr): | 70.28 | |
| Flow Rate (dscfm): | 10202.31 | |
| Rating above is **(select from list)**: | *below 100 MMBtu/hr, uncontrolled* | (assume uncontrolled, unless specifically stated otherwise) |
| Operating hours/year: | 8760 | |
| Fuel Heat Value, LHV (Btu/SCF): | 1020.0 | |

| pollutant | emission factor (lb/MMCF) | emission factor (ppmv) | lb/hr | tpy |
|---|---|---|---|---|
| VOC | 5.5 | | 0.379 | 1.660 |
| NOx[1] | **-** | **30** | 2.231 | 9.773 |
| CO[1] | - | 100 | 4.527 | 19.829 |
| PM | 7.6 | | 0.524 | 2.294 |
| Benzene | 2.10E-03 | | 1.45E-04 | 6.34E-04 |
| Toluene | 3.40E-03 | | 2.34E-04 | 1.03E-03 |
| Formaldehyde | 7.50E-02 | | 5.17E-03 | 2.26E-02 |
| $SO_2$ | 0 | | 0.00E+00 | 0.00E+00 |

**If the heater/boiler is fueled by Sour Gas, cannot use emission factors above to calculate $SO_2$ emissions, must use $SO_2$ mass balance:**

| **$SO_2$ Mass Balance calculation:** | |
|---|---|
| **Fuel $H_2S$ content (mol %) =** | **0.0005** |
| **$SO_2$ produced (lb/hr) =** | **0.0583** |
| **$SO_2$ produced (tpy) =** | **0.2553** |

| calculation factors | | |
|---|---|---|
| SO2 MW | 64.06 | lb/lb-mole |
| NO2 MW | 46 | lb/lb-mole |
| CO MW | 28 | lb/lb-mole |
| Ideal Gas Law | 378.61 | SCF/lb-mole |
| $F_d$[2] | 8710 | dscf/MMBtu |

[1] Manufacturer specific emission factors per Devco corrected for 3% $O_2$

[2] Factor per 40 CFR 40 Appx A Method 19 Table 19-2

**EP-4 Emissions Calculations (fueled by natural gas)**

| | | |
|---|---|---|
| Heater/Boiler rating (MMBtu/hr): | 3.90 | |
| Rating above is **(select from list)**: | *below 100 MMBtu/hr, uncontrolled* | (assume uncontrolled, unless specifically stated otherwise) |
| Operating hours/year: | 8760 | |
| Fuel Heat Value, LHV (Btu/SCF): | 1020.0 | |

| pollutant | emission factor (lb/MMCF) | lb/hr | tpy |
|---|---|---|---|
| VOC | 5.5 | 0.021 | 0.092 |
| NOx | **100** | 0.382 | 1.675 |
| CO | 84 | 0.321 | 1.407 |
| PM | 7.6 | 0.029 | 0.127 |
| Benzene | 2.10E-03 | 8.03E-06 | 3.52E-05 |
| Toluene | 3.40E-03 | 1.30E-05 | 5.69E-05 |
| Formaldehyde | 7.50E-02 | 2.87E-04 | 1.26E-03 |
| $SO_2$ | 0 | 0.00E+00 | 0.00E+00 |

**If the heater/boiler is fueled by Sour Gas, cannot use emission factors above to calculate $SO_2$ emissions, must use $SO_2$ mass balance:**

| **$SO_2$ Mass Balance calculation:** | |
|---|---|
| **Fuel $H_2S$ content (mol %) =** | **0.0005** |
| **$SO_2$ produced (lb/hr) =** | **0.0032** |
| **$SO_2$ produced (tpy) =** | **0.0142** |

| assumptions: | | |
|---|---|---|
| SO2 MW | 64.06 | lb/lb-mole |
| Ideal Gas Law | 378.61 | SCF/lb-mole |

**2-EP-4 and 3-EP-4 Emissions Calculations (fueled by natural gas)**

| | | |
|---|---|---|
| Heater/Boiler rating (MMBtu/hr): | 3.90 | |
| Rating above is **(select from list)**: | *below 100 MMBtu/hr, uncontrolled* | (assume uncontrolled, unless specifically stated otherwise) |
| Operating hours/year: | 8760 | |
| Fuel Heat Value, LHV (Btu/SCF): | 1020.0 | |

| pollutant | emission factor (lb/MMCF) | lb/hr | tpy |
|---|---|---|---|
| VOC | 5.5 | 0.021 | 0.092 |
| NOx | **100** | 0.382 | 1.675 |
| CO | 84 | 0.321 | 1.407 |
| PM | 7.6 | 0.029 | 0.127 |
| Benzene | 2.10E-03 | 8.03E-06 | 3.52E-05 |
| Toluene | 3.40E-03 | 1.30E-05 | 5.69E-05 |
| Formaldehyde | 7.50E-02 | 2.87E-04 | 1.26E-03 |
| $SO_2$ | 0 | 0.00E+00 | 0.00E+00 |

**If the heater/boiler is fueled by Sour Gas, cannot use emission factors above to calculate $SO_2$ emissions, must use $SO_2$ mass balance:**

| **$SO_2$ Mass Balance calculation:** | |
|---|---|
| **Fuel $H_2S$ content (mol %) =** | **0.0005** |
| **$SO_2$ produced (lb/hr) =** | **0.0032** |
| **$SO_2$ produced (tpy) =** | **0.0142** |

| assumptions: | | |
|---|---|---|
| SO2 MW | 64.06 | lb/lb-mole |
| Ideal Gas Law | 378.61 | SCF/lb-mole |

**EP-5 Emissions Calculations (fueled by natural gas)**

| | | |
|---|---|---|
| Heater/Boiler rating (MMBtu/hr): | 9.5 | |
| Rating above is **(select from list)**: | *below 100 MMBtu/hr, uncontrolled* | (assume uncontrolled, unless specifically stated otherwise) |
| Operating hours/year: | 8760 | |
| Fuel Heat Value, LHV (Btu/SCF): | 1020.0 | |

| pollutant | emission factor (lb/MMCF) | lb/hr | tpy |
|---|---|---|---|
| VOC | 5.5 | 0.051 | 0.224 |
| NOx | **100** | 0.931 | 4.079 |
| CO | 84 | 0.782 | 3.427 |
| PM | 7.6 | 0.071 | 0.310 |
| Benzene | 2.10E-03 | 1.96E-05 | 8.57E-05 |
| Toluene | 3.40E-03 | 3.17E-05 | 1.39E-04 |
| Formaldehyde | 7.50E-02 | 6.99E-04 | 3.06E-03 |
| $SO_2$ | 0 | 0.00E+00 | 0.00E+00 |

**If the heater/boiler is fueled by Sour Gas, cannot use emission factors above to calculate $SO_2$ emissions, must use $SO_2$ mass balance:**

| **$SO_2$ Mass Balance calculation:** | |
|---|---|
| **Fuel $H_2S$ content (mol %) =** | **0.0005** |
| **$SO_2$ produced (lb/hr) =** | **0.0079** |
| **$SO_2$ produced (tpy) =** | **0.0345** |

| assumptions: | | |
|---|---|---|
| SO2 MW | 64.06 | lb/lb-mole |
| Ideal Gas Law | 378.61 | SCF/lb-mole |

**2-EP-5 and 3-EP-5 Emissions Calculations (fueled by natural gas)**

| | | |
|---|---|---|
| Heater/Boiler rating (MMBtu/hr): | 9.5 | |
| Rating above is **(select from list)**: | *below 100 MMBtu/hr, uncontrolled* | (assume uncontrolled, unless specifically stated otherwise) |
| Operating hours/year: | 8760 | |
| Fuel Heat Value, LHV (Btu/SCF): | 1020.0 | |

| pollutant | emission factor (lb/MMCF) | lb/hr | tpy |
|---|---|---|---|
| VOC | 5.5 | 0.051 | 0.224 |
| NOx | **100** | 0.931 | 4.079 |
| CO | 84 | 0.782 | 3.427 |
| PM | 7.6 | 0.071 | 0.310 |
| Benzene | 2.10E-03 | 1.96E-05 | 8.57E-05 |
| Toluene | 3.40E-03 | 3.17E-05 | 1.39E-04 |
| Formaldehyde | 7.50E-02 | 6.99E-04 | 3.06E-03 |
| $SO_2$ | 0 | 0.00E+00 | 0.00E+00 |

**If the heater/boiler is fueled by Sour Gas, <u>cannot</u> use emission factors above to calculate $SO_2$ emissions, must use $SO_2$ mass balance:**

| **$SO_2$ Mass Balance calculation:** | |
|---|---|
| **Fuel $H_2S$ content (mol %) =** | **0.0005** |
| **$SO_2$ produced (lb/hr) =** | **0.0079** |
| **$SO_2$ produced (tpy) =** | **0.0345** |

| assumptions: | | |
|---|---|---|
| SO2 MW | 64.06 | lb/lb-mole |
| Ideal Gas Law | 378.61 | SCF/lb-mole |

**EP-6 and 2-EP-6 Emissions Calculations (fueled by natural gas)**

| | | |
|---|---|---|
| Heater/Boiler rating (MMBtu/hr): | 23.4 | |
| Rating above is **(select from list)**: | *below 100 MMBtu/hr, uncontrolled* | (assume uncontrolled, unless specifically stated otherwise) |
| Operating hours/year: | 8760 | |
| Fuel Heat Value, LHV (Btu/SCF): | 1020.0 | |

| pollutant | emission factor (lb/MMCF) | lb/hr | tpy |
|---|---|---|---|
| VOC | 5.5 | 0.126 | 0.553 |
| NOx | **100** | 2.294 | 10.048 |
| CO | 84 | 1.927 | 8.441 |
| PM | 7.6 | 0.174 | 0.764 |
| Benzene | 2.10E-03 | 4.82E-05 | 2.11E-04 |
| Toluene | 3.40E-03 | 7.80E-05 | 3.42E-04 |
| Formaldehyde | 7.50E-02 | 1.72E-03 | 7.54E-03 |
| $SO_2$ | 0 | 0.00E+00 | 0.00E+00 |

**If the heater/boiler is fueled by Sour Gas, cannot use emission factors above to calculate $SO_2$ emissions, must use $SO_2$ mass balance:**

| **$SO_2$ Mass Balance calculation:** | |
|---|---|
| **Fuel $H_2S$ content (mol %) =** | **0.0005** |
| **$SO_2$ produced (lb/hr) =** | **0.0194** |
| **$SO_2$ produced (tpy) =** | **0.0850** |

| assumptions: | | |
|---|---|---|
| SO2 MW | 64.06 | lb/lb-mole |
| Ideal Gas Law | 378.61 | SCF/lb-mole |

TARGA

*Targa Midstream Services LLC - Roadrunner Gas Processing Plant*

## Fugitive Emissions

Emission unit number(s): FUG
Source description: Facility-wide Fugitive Emissions
Total Operating Hours: 8,760
Number of Treatment Trains: 3

| Component | | Emission factor[1] (lb/hr/source) | VOC Content[2] (wt%) | HAP Content[2] (wt%) | Hexane[2] (wt%) | $H_2S$ Content[2] (wt%) | $CO_2$ Content[2] (wt%) | $CH_4$ Content[2] (wt%) | Subcomponent Count[3] | VOC Emissions[4,5] lb/hr | VOC Emissions[4,5] tpy | HAP Emissions[4,5] lb/hr | HAP Emissions[4,5] tpy | Hexane Emissions[4,5] lb/hr | Hexane Emissions[4,5] tpy | $H_2S$ Emissions[4,5] lb/hr | $H_2S$ Emissions[4,5] tpy | $CO_2$ Emissions[4,5] lb/hr | $CO_2$ Emissions[4,5] tpy | $CH_4$ Emissions[4,5] lb/hr | $CH_4$ Emissions[4,5] tpy |
|---|---|---|---|---|---|---|---|---|---|---|---|---|---|---|---|---|---|---|---|---|---|
| Valves | Inlet Gas | 9.92E-03 | 22.12% | 0.52% | 0.42% | 0.0008% | 0.68% | 58.06% | 6714 | 14.73 | 64.53 | 0.35 | 1.52 | 0.28 | 1.23 | 5.58E-04 | 2.45E-03 | 0.45 | 1.99 | 38.67 | 169.39 |
| | Residue Gas | 9.92E-03 | 0.76% | 0.0017% | 0.0003% | 0.0000% | 1.39% | 80.53% | 2982 | 0.22 | 0.98 | 0.00 | 0.00 | 0.00 | 0.00 | 0.00E+00 | 0.00E+00 | 0.41 | 1.80 | 23.82 | 104.35 |
| | Light Oil | 5.51E-03 | 99.98% | 14.99% | 11.72% | 0.0000% | 0.00% | 0.00% | 819 | 4.51 | 19.77 | 0.68 | 2.96 | 0.53 | 2.32 | 0.00E+00 | 0.00E+00 | 0.00 | 0.00 | 0.00 | 0.00 |
| Connectors | Inlet Gas | 4.41E-04 | 22.12% | 0.52% | 0.42% | 0.0008% | 0.68% | 58.06% | 18342 | 1.79 | 7.84 | 0.04 | 0.18 | 0.03 | 0.15 | 6.78E-05 | 2.97E-04 | 0.06 | 0.24 | 4.70 | 20.57 |
| | Residue Gas | 4.41E-04 | 0.76% | 0.0017% | 0.0003% | 0.0000% | 1.39% | 80.53% | 0 | 0.00 | 0.00 | 0.00 | 0.00 | 0.00 | 0.00 | 0.00E+00 | 0.00E+00 | 0.00 | 0.00 | 0.00 | 0.00 |
| | Light Oil | 4.63E-04 | 99.98% | 14.99% | 11.72% | 0.0000% | 0.00% | 0.00% | 2000 | 0.93 | 4.05 | 0.14 | 0.61 | 0.11 | 0.47 | 0.00E+00 | 0.00E+00 | 0.00 | 0.00 | 0.00 | 0.00 |
| Flanges | Inlet Gas | 8.60E-04 | 22.12% | 0.52% | 0.42% | 0.0008% | 0.68% | 58.06% | 3156 | 0.60 | 2.63 | 0.01 | 0.06 | 0.01 | 0.05 | 2.27E-05 | 9.96E-05 | 0.02 | 0.08 | 1.58 | 6.90 |
| | Residue Gas | 8.60E-04 | 0.76% | 0.0017% | 0.0003% | 0.0000% | 1.39% | 80.53% | 5406 | 0.04 | 0.15 | 0.00 | 0.00 | 0.00 | 0.00 | 0.00E+00 | 0.00E+00 | 0.06 | 0.28 | 3.74 | 16.39 |
| | Light Oil | 2.43E-04 | 99.98% | 14.99% | 11.72% | 0.0000% | 0.00% | 0.00% | 255 | 0.06 | 0.27 | 0.01 | 0.04 | 0.01 | 0.03 | 0.00E+00 | 0.00E+00 | 0.00 | 0.00 | 0.00 | 0.00 |
| Pump Seals | Inlet Gas | 5.29E-03 | 22.12% | 0.52% | 0.42% | 0.0008% | 0.68% | 58.06% | 0 | 0.00 | 0.00 | 0.00 | 0.00 | 0.00 | 0.00 | 0.00E+00 | 0.00E+00 | 0.00 | 0.00 | 0.00 | 0.00 |
| | Residue Gas | 5.29E-03 | 0.76% | 0.0017% | 0.0003% | 0.0000% | 1.39% | 80.53% | 0 | 0.00 | 0.00 | 0.00 | 0.00 | 0.00 | 0.00 | 0.00E+00 | 0.00E+00 | 0.00 | 0.00 | 0.00 | 0.00 |
| | Light Oil | 2.87E-02 | 99.98% | 14.99% | 11.72% | 0.0000% | 0.00% | 0.00% | 29 | 0.82 | 3.58 | 0.12 | 0.54 | 0.10 | 0.42 | 0.00E+00 | 0.00E+00 | 0.00 | 0.00 | 0.00 | 0.00 |
| Other | Inlet Gas | 1.94E-02 | 22.12% | 0.52% | 0.42% | 0.0008% | 0.68% | 58.06% | 324 | 1.39 | 6.09 | 0.03 | 0.14 | 0.03 | 0.12 | 5.27E-05 | 2.31E-04 | 0.04 | 0.19 | 3.65 | 15.99 |
| | Residue Gas | 1.94E-02 | 0.76% | 0.0017% | 0.0003% | 0.0000% | 1.39% | 80.53% | 0 | 0.00 | 0.00 | 0.00 | 0.00 | 0.00 | 0.00 | 0.00E+00 | 0.00E+00 | 0.00 | 0.00 | 0.00 | 0.00 |
| | Light Oil | 1.65E-02 | 99.98% | 14.99% | 11.72% | 0.0000% | 0.00% | 0.00% | 12 | 0.20 | 0.87 | 0.03 | 0.13 | 0.02 | 0.10 | 0.00E+00 | 0.00E+00 | 0.00 | 0.00 | 0.00 | 0.00 |
| | | | | | | | | | ***Total:*** | **25.29** | **110.76** | **1.41** | **6.19** | **1.12** | **4.89** | **7.01E-04** | **3.07E-03** | **1.05** | **4.58** | **76.16** | **333.58** |

[1] Emission factors from Table 2-4 of EPA Protocol for Equipment Leak Emission Estimates, 1995.
[2] Weight percent of gas and liquid components from site specific liquids and gas analyses.
[3] Component counts are based on facility design.
[4] Hourly Emissions [lb/hr] = Emissions Factor [lb/hr/component] * Weight Content of Chemical Component [%] * Subcomponent Count.
[5] Annual Emissions [ton/yr] = Hourly Emissions [lb/hr] * Operating Hours [hr/yr] * 1/2000 [ton/lb].

*Targa Midstream Services LLC - Roadrunner Gas Processing Plant*

# Glycol Dehydrator

| | |
|---|---|
| Emission Unit: | EP-7 and 3-EP-7 |
| Source Description: | TEG Dehydrator emissions |
| Thermal Oxidizer Control Efficiency: | 99.9% |
| Operating Hours: | 8760 hrs/yr |

| | VOC | | $H_2S$ | | Total HAP | | Benzene | | Toluene | | Ethylbenzene | | Xylene | | Methane | |
|---|---|---|---|---|---|---|---|---|---|---|---|---|---|---|---|---|
| | lb/hr | tpy | lb/hr | tpy | lb/hr | tpy | lb/hr | tpy | lb/hr | tpy | lb/hr | tpy | lb/hr | tpy | lb/hr | tpy |
| Uncontrolled Emissions from ProMax | 102.15 | 447.40 | 2.15E-05 | 9.42E-05 | 33.28 | 145.74 | 14.19 | 62.16 | 6.56 | 28.73 | 1.47 | 6.46 | 1.03 | 4.51 | 4.59 | 20.09 |
| TOTAL Controlled Emissions | 0.10 | 0.45 | 2.15E-08 | 9.42E-08 | 0.0333 | 0.1457 | 0.0142 | 0.0622 | 0.0066 | 0.0287 | 0.0015 | 0.0065 | 0.0010 | 0.0045 | 2.29E-05 | 1.00E-04 |
| **Uncontrolled Emissions Per Unit** | 102.15 | 447.40 | 2.15E-05 | 9.42E-05 | 33.28 | 145.74 | 14.19 | 62.16 | 6.56 | 28.73 | 1.47 | 6.46 | 1.03 | 4.51 | 4.59 | 20.09 |
| **Controlled Emissions Per Unit** | 0.10 | 0.45 | 2.15E-08 | 9.42E-08 | 0.0333 | 0.1457 | 0.0142 | 0.0622 | 0.0066 | 0.0287 | 0.0015 | 0.0065 | 0.0010 | 0.0045 | 2.29E-05 | 1.00E-04 |

**Note:** Controlled methane based on 99.9995% destruction (based on 0.001 kg/MMBtu emission EF in 40 CFR Part 98).
Emissions estimated using BR&E ProMax.
TEG Dehydrator controlled by thermal oxidizer unit EP-9
TEG Dehydrator controlled emissions exit via stack EP-9 but are listed as EP-7 and 3-EP-7 emission unit emissions

*Targa Midstream Services LLC - Roadrunner Gas Processing Plant*

# Glycol Dehydrator

| | |
|---|---|
| Emission Unit: | 2-EP-7 |
| Source Description: | TEG Dehydrator emissions |
| Thermal Oxidizer Control Efficiency: | 99.9% |
| Operating Hours: | 8760 hrs/yr |

| | VOC | | $H_2S$ | | Total HAP | | Benzene | | Toluene | | Ethylbenzene | | Xylene | | Methane | |
|---|---|---|---|---|---|---|---|---|---|---|---|---|---|---|---|---|
| | lb/hr | tpy | lb/hr | tpy | lb/hr | tpy | lb/hr | tpy | lb/hr | tpy | lb/hr | tpy | lb/hr | tpy | lb/hr | tpy |
| Uncontrolled Emissions from ProMax | 102.15 | 447.40 | 2.24E-05 | 9.81E-05 | 33.28 | 145.75 | 14.19 | 62.15 | 6.56 | 28.73 | 1.47 | 6.46 | 1.03 | 4.51 | 4.59 | 20.12 |
| TOTAL Controlled Emissions | 0.10 | 0.45 | 2.24E-08 | 9.81E-08 | 0.033 | 0.15 | 0.014 | 0.062 | 0.0066 | 0.029 | 0.0015 | 0.0065 | 0.0010 | 0.0045 | 2.30E-05 | 1.01E-04 |
| **Uncontrolled Emissions Per Unit** | 102.15 | 447.40 | 2.24E-05 | 9.81E-05 | 33.28 | 145.75 | 14.19 | 62.15 | 6.56 | 28.7 | 1.47 | 6.46 | 1.03 | 4.51 | 4.59 | 20.12 |
| **Controlled Emissions Per Unit** | 0.10 | 0.45 | 2.24E-08 | 9.81E-08 | 0.033 | 0.15 | 0.014 | 0.062 | 0.0066 | 0.0287 | 0.0015 | 0.0065 | 0.0010 | 0.0045 | 2.30E-05 | 1.01E-04 |

**Note:** Controlled methane based on 99.9995% destruction (based on 0.001 kg/MMBtu emission EF in 40 CFR Part 98).
Emissions estimated using BR&E ProMax.
TEG Dehydrator controlled by thermal oxidizer unit EP-9
TEG Dehydrator controlled emissions exit via stack EP-9 but are listed as 2-EP-7 emisision unit emissions

*Targa Midstream Services LLC - Roadrunner Gas Processing Plant*

## Amine Gas Treatment

Emission Unit: EP-8, 2-EP-8, 3-EP-8
Source Description: Amine vent controlled by thermal oxidizer unit EP-9
Thermal Oxidizer Control Efficiency: 99.9%
Operating Hours: 8760 hrs/yr

| Components | Uncontrolled[1] | | Thermal Oxidizer Control Efficiency | Controlled[4] | |
|---|---|---|---|---|---|
| | EP-8 Amine Vent (lb/hr) | EP-8 Amine Vent (ton/yr) | | EP-8 Amine Vent (lb/hr) | EP-8 Amine Vent (ton/yr) |
| H2S[2] | 14.17 | 62.05 | 99.9% | 0.014 | 0.062 |
| SO2[3] | - | - | - | 28.331 | 124.09 |
| CO2 | 85,277.07 | 373,513.58 | - | 85,277.074 | 373513.58 |
| N2 | 0.13 | 0.57 | - | 0.131 | 0.57 |
| Methane | 78.29 | 342.89 | 99.9% | 0.078 | 0.34 |
| Ethane | 57.56 | 252.11 | 99.9% | 0.058 | 2.52E-01 |
| Propane | 24.52 | 107.41 | 99.9% | 0.025 | 0.11 |
| i-Butane | 2.53 | 11.07 | 99.9% | 0.003 | 0.011 |
| n-Butane | 11.35 | 49.70 | 99.9% | 0.011 | 0.050 |
| i-Pentane | 0.71 | 3.12 | 99.9% | 0.001 | <0.01 |
| n-Pentane | 1.26 | 5.52 | 99.9% | 0.001 | <0.01 |
| n-Hexane | 0.72 | 3.15 | 99.9% | 0.00072 | <0.01 |
| n-Heptane | 0.11 | 0.47 | 99.9% | 0.000 | <0.01 |
| n-Octane | 0.02 | 0.11 | 99.9% | 0.000 | <0.01 |
| n-Nonane | 0.00E+00 | 0.00E+00 | 99.9% | - | 0.00E+00 |
| n-Decane | 0.00E+00 | 0.00E+00 | 99.9% | - | 0.00E+00 |
| Undecane | 0.00E+00 | 0.00E+00 | 99.9% | - | 0.00E+00 |
| Benzene | 90.79 | 397.67 | 99.9% | 0.091 | 0.40 |
| Toluene | 5.62E+01 | 2.46E+02 | 99.9% | 0.056 | 0.25 |
| Ethylbenzene | 18.11 | 79.33 | 99.9% | 0.018 | 0.08 |
| m-Xylene | 17.67 | 77.39 | 99.9% | 0.018 | 0.08 |
| Water | 2,506.19 | 10,977.09 | - | 2,506.185 | 10.98 |
| MDEA | 8.27E-05 | 3.62E-04 | - | 0.000 | <0.01 |
| Piperazine | 9.05E-05 | 3.97E-04 | - | 0.000 | <0.01 |
| TEG | 0.00E+00 | 0.00E+00 | - | - | 0.00 |
| **TOTALS:** | **88,157** | **386,129** | **-** | **87812.10** | **373650.86** |
| **TOTAL VOCs:** | **224.00** | **981.12** | **-** | **0.22** | **0.98** |
| **TOTAL HAPs:** | **183.50** | **803.71** | **-** | **0.18** | **0.80** |

**Notes:**

[1] Emissions from the amine vent are calculated using BR&E ProMax. Hourly emissions are based on the maximum emissions determined from ProMax runs conducted at varying gas flowrates.

[2]Controlled $H_2S$ emissions assume conversion to $SO_2$ based on control efficiency.

[3]Controlled $SO_2$ emissions assumed 100% conversion of $H_2S$ to $SO_2$.

[4]Controlled emissions are represented at the exit via stack EP-9 but are listed as EP-8 emisision unit emissions except for $SO_2$ and $H_2S$.

*Targa Midstream Services LLC - Roadrunner Gas Processing Plant*

## Diesel Fired Generator

| | |
|---|---|
| Emission Unit: | GEN-1 |
| Source Description: | Diesel Fired Generator |
| Manufacturer: | Generac |
| Model: | 2506C-E15TAG3 |
| Type: | Compression Ignited |

**Fuel Consumption**

| | | | |
|---|---|---|---|
| Site horsepower | 762 | hp | Maximum horsepower of generator engine |
| Site kW | 500 | kW | Maximum kW of generator engine |
| Fuel heat value | 137000 | Btu/gal | Fuel heat value of typical diesel |
| Heat input | 6.10 | MMBtu/hr | Fuel consumption * Fuel heat value |
| Hours of Operation | 500 | hrs/yr | Assume ~3 weeks/yr of runtime |
| Fuel Consumption | 8000 | Btu/hp-hr | Engineering Estimate |

**Emission Calculations**

**Uncontrolled**

| $NO_x$[1] | CO[1] | VOC[1,2] | $SO_2$[3] | HCHO[4] | $PM_{10}$[1,5] | $PM_{2.5}$[1,5] | Total HAPs[4] | | |
|---|---|---|---|---|---|---|---|---|---|
| 3.42 | 0.47 | 1.00 | | | 0.020 | 0.020 | | g/hp-hr | Per manufacturers specifications or Tier I standard |
| | | | 0.29 | 1.18E-03 | | | | lb/MMBtu | AP-42 Table 3.3-1,2 |
| **5.75** | **0.79** | **1.69** | **1.77** | **7.19E-03** | **0.034** | **0.034** | **0.023** | lb/hr | |
| **1.44** | **0.20** | **0.42** | **0.44** | **0.002** | **0.008** | **0.008** | **0.006** | tpy | |

| Acetaldehyde[4] | Acrolein[4] | Benzene[4] | 1-3 Butadiene[4] | Toluene[4] | Xylene[4] | |
|---|---|---|---|---|---|---|
| 0.000767 | 0.0000925 | 0.000933 | 0.0000391 | 0.000409 | 0.000285 | lb/MMBtu |
| **4.68E-03** | **5.64E-04** | **5.69E-03** | **2.38E-04** | **2.49E-03** | **1.74E-03** | lb/hr |
| **1.17E-03** | **1.41E-04** | **1.42E-03** | **5.96E-05** | **6.23E-04** | **4.34E-04** | tpy |

**Controlled**

| $NO_x$[1] | CO[1] | VOC[1,2] | $SO_2$[3] | HCHO[4] | $PM_{10}$[1,5] | $PM_{2.5}$[1,5] | Total HAPs[4] | | |
|---|---|---|---|---|---|---|---|---|---|
| 3.42 | 0.47 | 1.00 | | | 0.020 | 0.020 | | g/hp-hr | Per manufacturers specifications or Tier I standard |
| 0% | 0% | 0% | | | 0% | 0% | | | % Reduction |
| | | | 0.29 | 1.18E-03 | | | | lb/MMBtu | AP-42 Table 3.3-1,2 |
| **5.75** | **0.79** | **1.69** | **1.77** | **7.19E-03** | **0.034** | **0.034** | **0.023** | lb/hr | |
| **1.44** | **0.20** | **0.42** | **0.44** | **0.002** | **0.008** | **0.008** | **0.006** | tpy | |

*NOTES*

[1] $NO_x$, CO, VOC, and PM emission factors are referenced from manufacturers specification.

[2] Formaldehyde and acetaldehyde emissions conservatively included in VOC total.

[3] AP-42 Table 3.3-1 Emission Factors for Uncontrolled Gasoline and Diesel Industrial Engines

[4] HAPs emissions factors are referenced from AP-42 Table 3.2-2 Speciated Organic Compound Emission Factors for Uncontrolled Diesel Engines.

[5] Assumes PM (Filterable + Condensable) = $PM_{10}$ = $PM_{2.5}$

**GHG Emissions**

| $CO_2$[1] | $CH_4$[2] | $N_2O$[2] | $CH_4$[3] | $N_2O$[3] | Total CO2e | | |
|---|---|---|---|---|---|---|---|
| 73.96 | 0.003 | 0.0006 | | | 0.020 | kg $CO_2$/MMBtu | 40CFR Part 98, Table C-1 |
| | | | 25 | 298 | | GWP Factor | 40CFR Part 98, Table A-1 |
| **993.98** | **0.040** | **8.06E-03** | **1.01** | **2.40** | **997.39** | lb/hr | |
| **248.49** | **0.010** | **2.02E-03** | **0.25** | **0.60** | **249.35** | tpy | |

*NOTES*

[1] $CO_2$ emission factor is referenced from Table C-1 of 40 CFR Part 98 for Distillate Oil No. 2.

[2] $CH_4$ and $N_2O$ emission factors are referenced from Table C-2 of 40 CFR Part 98.

[3] GWP is referenced from Table A-1 of 40 CFR Part 98.

*Targa Midstream Services LLC - Roadrunner Gas Processing Plant*

## Diesel Fired Generator

| | |
|---|---|
| Emission Unit: | GEN-2 |
| Source Description: | Diesel Fired Generator |
| Manufacturer: | TBD |
| Model: | TBD |
| Type: | Compression Ignited |

**Fuel Consumption**

| | | | |
|---|---|---|---|
| Site horsepower | 268 | hp | Maximum horsepower of generator engine |
| Site kW | 200 | kW | Maximum kW of generator engine |
| Fuel heat value | 137000 | Btu/gal | Fuel heat value of typical diesel |
| Heat input | 2.14 | MMBtu/hr | Fuel consumption * Fuel heat value |
| Hours of Operation | 500 | hrs/yr | Assume ~3 weeks/yr of runtime |
| Fuel Consumption | 8000 | Btu/hp-hr | Engineering Estimate |

**Emission Calculations**

| Uncontrolled | | | | | | | | | |
|---|---|---|---|---|---|---|---|---|---|
| $NO_x$[1] | $CO$[1] | $VOC$[1,2] | $SO_2$[3] | $HCHO$[4] | $PM_{10}$[1,5] | $PM_{2.5}$[1,5] | Total HAPs[4] | | |
| 0.30 | 2.60 | 0.14 | | | 0.015 | 0.015 | | q/hp-hr | Tier 4 Emissions Standards for Non-Road Engines |
| | | | 0.29 | 1.18E-03 | | | | lb/MMBtu | AP-42 Table 3.3-1,2 |
| **0.18** | **1.54** | **0.09** | **0.62** | **2.53E-03** | **0.009** | **0.009** | **0.008** | lb/hr | |
| **0.04** | **0.38** | **0.02** | **0.16** | **0.001** | **0.002** | **0.002** | **0.002** | tpy | |

| Acetaldehyde[4] | Acrolein[4] | Benzene[4] | 1-3 Butadiene[4] | Toluene[4] | Xylene[4] | |
|---|---|---|---|---|---|---|
| 0.000767 | 0.0000925 | 0.000933 | 0.0000391 | 0.000409 | 0.000285 | lb/MMBtu |
| **1.64E-03** | **1.98E-04** | **2.00E-03** | **8.38E-05** | **8.77E-04** | **6.11E-04** | lb/hr |
| **4.11E-04** | **4.96E-05** | **5.00E-04** | **2.10E-05** | **2.19E-04** | **1.53E-04** | tpy |

| Controlled | | | | | | | | | |
|---|---|---|---|---|---|---|---|---|---|
| $NO_x$[1] | $CO$[1] | $VOC$[1,2] | $SO_2$[3] | $HCHO$[4] | $PM_{10}$[1,5] | $PM_{2.5}$[1,5] | Total HAPs[4] | | |
| 0.30 | 2.60 | 0.14 | | | 0.015 | 0.015 | | q/hp-hr | Tier 4 Emissions Standards for Non-Road Engines |
| 0% | 0% | 0% | | | 0% | 0% | | | % Reduction |
| | | | 0.29 | 1.18E-03 | | | | lb/MMBtu | AP-42 Table 3.3-1,2 |
| **0.18** | **1.54** | **0.09** | **0.62** | **2.53E-03** | **0.009** | **0.009** | **0.008** | lb/hr | |
| **0.04** | **0.38** | **0.02** | **0.16** | **0.001** | **0.002** | **0.002** | **0.002** | tpy | |

*NOTES*

[1] $NO_x$, CO, VOC, and PM emission factors are referenced from Final Tier 4 Emissions Standards for Non-Road Engines.

[2] Formaldehyde and acetaldehyde emissions conservatively included in VOC total.

[3] AP-42 Table 3.3-1 Emission Factors for Uncontrolled Gasoline and Diesel Industrial Engines

[4] HAPs emissions factors are referenced from AP-42 Table 3.2-2 Speciated Organic Compound Emission Factors for Uncontrolled Diesel Engines.

[5] Assumes PM (Filterable + Condensable) = $PM_{10}$ = $PM_{2.5}$

| GHG Emissions | | | | | | | |
|---|---|---|---|---|---|---|---|
| $CO_2$[1] | $CH_4$[2] | $N_2O$[2] | $CH_4$[3] | $N_2O$[3] | Total CO2e | | |
| 73.96 | 0.003 | 0.0006 | | | 0.020 | kg $CO_2$/MMB | 40CFR Part 98, Table C-1 |
| | | | 25 | 298 | | GWP Factor | 40CFR Part 98, Table A-1 |
| **349.59** | **0.014** | **2.84E-03** | **0.35** | **0.85** | **350.79** | lb/hr | |
| **87.40** | **0.0035** | **7.09E-04** | **0.089** | **0.21** | **87.70** | tpy | |

*NOTES*

[1] $CO_2$ emission factor is referenced from Table C-1 of 40 CFR Part 98 for Distillate Oil No. 2.

[2] $CH_4$ and $N_2O$ emission factors are referenced from Table C-2 of 40 CFR Part 98.

[3] GWP is referenced from Table A-1 of 40 CFR Part 98.

*Targa Midstream Services LLC - Roadrunner Gas Processing Plant*

# Diesel Fired Generator

| | |
|---|---|
| Emission Unit: | GEN-1 through GEN-10 |
| Source Description: | Diesel Fired Generator |
| Manufacturer: | TBD |
| Model: | TBD |
| Type: | Compression Ignited |

**Fuel Consumption**

| | | | |
|---|---|---|---|
| Site horsepower | 499 | hp | Maximum horsepower of generator engine |
| Site kW | 210 | kW | Maximum kW of generator engine |
| Fuel heat value | 137000 | Btu/gal | Fuel heat value of typical diesel |
| Heat input | 3.99 | MMBtu/hr | Fuel consumption * Fuel heat value |
| Hours of Operation | 500 | hrs/yr | Assume ~3 weeks/yr of runtime |
| Fuel Consumption | 8000 | Btu/hp-hr | Engineering Estimate |

**Emission Calculations**

**Uncontrolled**

| $NO_x$[1] | CO[1] | VOC[1,2] | $SO_2$[3] | HCHO[4] | $PM_{10}$[1,5] | $PM_{2.5}$[1,5] | Total HAPs[4] | | |
|---|---|---|---|---|---|---|---|---|---|
| 0.30 | 2.60 | 0.14 | | | 0.015 | 0.015 | | g/hp-hr | Tier 4 Emissions Standards for Non-Road Engines |
| | | | 0.29 | 1.18E-03 | | | | lb/MMBtu | AP-42 Table 3.3-1,2 |
| **0.33** | **2.86** | **0.16** | **1.16** | **4.71E-03** | **0.017** | **0.017** | **0.015** | lb/hr | |
| **0.08** | **0.72** | **0.04** | **0.29** | **0.001** | **0.004** | **0.004** | **0.004** | tpy | |

| Acetaldehyde[4] | Acrolein[4] | Benzene[4] | 1-3 Butadiene[4] | Toluene[4] | Xylene[4] | |
|---|---|---|---|---|---|---|
| 0.000767 | 0.0000925 | 0.000933 | 0.0000391 | 0.000409 | 0.000285 | lb/MMBtu |
| **3.06E-03** | **3.69E-04** | **3.72E-03** | **1.56E-04** | **1.63E-03** | **1.14E-03** | lb/hr |
| **7.65E-04** | **9.23E-05** | **9.31E-04** | **3.90E-05** | **4.08E-04** | **2.84E-04** | tpy |

**Controlled**

| $NO_x$[1] | CO[1] | VOC[1,2] | $SO_2$[3] | HCHO[4] | $PM_{10}$[1,5] | $PM_{2.5}$[1,5] | Total HAPs[4] | | |
|---|---|---|---|---|---|---|---|---|---|
| 0.30 | 2.60 | 0.14 | | | 0.015 | 0.015 | | g/hp-hr | Tier 4 Emissions Standards for Non-Road Engines |
| 0% | 0% | 0% | | | 0% | 0% | | | % Reduction |
| | | | 0.29 | 1.18E-03 | | | | lb/MMBtu | AP-42 Table 3.3-1,2 |
| **0.33** | **2.86** | **0.16** | **1.16** | **4.71E-03** | **0.017** | **0.017** | **0.015** | lb/hr | |
| **0.08** | **0.72** | **0.04** | **0.29** | **0.001** | **0.004** | **0.004** | **0.004** | tpy | |

*NOTES*

[1] $NO_x$, CO, VOC, and PM emission factors are referenced from Final Tier 4 Emissions Standards for Non-Road Engines.

[2] Formaldehyde and acetaldehyde emissions conservatively included in VOC total.

[3] AP-42 Table 3.3-1 Emission Factors for Uncontrolled Gasoline and Diesel Industrial Engines

[4] HAPs emissions factors are referenced from AP-42 Table 3.2-2 Speciated Organic Compound Emission Factors for Uncontrolled Diesel Engines.

[5] Assumes PM (Filterable + Condensable) = $PM_{10}$ = $PM_{2.5}$

**GHG Emissions**

| $CO_2$[1] | $CH_4$[2] | $N_2O$[2] | $CH_4$[3] | $N_2O$[3] | Total CO2e | | |
|---|---|---|---|---|---|---|---|
| 73.96 | 0.003 | 0.0006 | | | 0.020 | kg $CO_2$/MMBtu | 40CFR Part 98, Table C-1 |
| | | | 25 | 298 | | GWP Factor | 40CFR Part 98, Table A-1 |
| **650.91** | **0.026** | **5.28E-03** | **0.66** | **1.57** | **653.15** | lb/hr | |
| **162.73** | **0.0066** | **1.32E-03** | **0.17** | **0.39** | **163.29** | tpy | |

*NOTES*

[1] $CO_2$ emission factor is referenced from Table C-1 of 40 CFR Part 98 for Distillate Oil No. 2.

[2] $CH_4$ and $N_2O$ emission factors are referenced from Table C-2 of 40 CFR Part 98.

[3] GWP is referenced from Table A-1 of 40 CFR Part 98.

*Targa Midstream Services LLC - Roadrunner Gas Processing Plant*

## Condensate Storage Tanks

| | |
|---|---|
| Emission unit number(s): | |
| Source description: | Condensate Tanks |
| | |
| Annual Operating Hours: | 8,760 |
| Control Efficiency: | 95% |
| Number of Tanks: | 5 |
| Capacity of Tanks: | 1,000 bbl |
| Hourly Throughout: | 333.33 bbl/hr |
| Daily Throughput: | 8000.00 bbl/d |
| Annual Throughput: | 2920000 bbl/yr |
| Hourly Throughout per Tank: | 67 bbl/hr |
| Daily Throughput per Tank: | 1600 bbl/d |
| Annual Throughput per Tank: | 584000 bbl/yr |

**Condensate Tank Emissions[1,2]**

| Component | Uncontrolled Emissions (hourly basis) | | | Uncontrolled Emissions (annual basis) | | | Controlled Emissions | |
|---|---|---|---|---|---|---|---|---|
| | Total Flash (lb/hr) | Total Working and Breathing (lb/hr) | Total per Tank (lb/hr) | Total Flash (lb/hr) | Total Working and Breathing (lb/hr) | Total Emissions Per Tank (tpy) | Total Emissions per Tank (lb/hr) | Total Emissions Per Tank (tpy) |
| Carbon Dioxide | 0.00E+00 | 0.00E+00 | 0.00E+00 | 0.00E+00 | 0.00E+00 | 0.00E+00 | 0.00E+00 | 0.00E+00 |
| Hydrogen Sulfide | 2.88E-04 | 1.86E-02 | 0.00 | 0.00E+00 | 2.68E-03 | 2.35E-03 | 1.88E-04 | 1.17E-04 |
| Nitrogen | 7.73E-01 | 2.29E+00 | 0.61 | 0.00E+00 | 6.18E-01 | 5.42E-01 | 6.13E-01 | 5.42E-01 |
| Methane | 3.78E-03 | 6.10E-02 | 0.01 | 0.00E+00 | 1.29E-02 | 1.13E-02 | 6.48E-04 | 5.67E-04 |
| Ethane | 1.85E-03 | 1.84E-01 | 0.04 | 0.00E+00 | 2.83E-02 | 2.48E-02 | 1.86E-03 | 1.24E-03 |
| Propane | 6.92E-03 | 5.67E-01 | 0.11 | 0.00E+00 | 8.03E-02 | 7.04E-02 | 5.74E-03 | 3.52E-03 |
| i-Butane | 1.34E-02 | 9.91E-01 | 0.20 | 0.00E+00 | 1.34E-01 | 1.17E-01 | 1.00E-02 | 5.85E-03 |
| n-Butane | 1.81E-01 | 1.37E+01 | 2.78 | 0.00E+00 | 1.82E+00 | 1.59E+00 | 1.39E-01 | 7.96E-02 |
| i-Pentane | 5.92E-01 | 4.15E+01 | 8.42 | 0.00E+00 | 5.21E+00 | 4.57E+00 | 4.21E-01 | 2.28E-01 |
| n-Pentane | 7.24E-01 | 5.07E+01 | 10.28 | 0.00E+00 | 6.23E+00 | 5.46E+00 | 5.14E-01 | 2.73E-01 |
| i-Hexane | 3.42E-01 | 2.37E+01 | 4.82 | 0.00E+00 | 2.78E+00 | 2.44E+00 | 2.41E-01 | 1.22E-01 |
| Hexane | 1.91E-01 | 1.31E+01 | 2.67 | 0.00E+00 | 1.51E+00 | 1.32E+00 | 1.33E-01 | 6.60E-02 |
| Heptane | 9.96E-02 | 6.81E+00 | 1.38 | 0.00E+00 | 7.25E-01 | 6.35E-01 | 6.91E-02 | 3.18E-02 |
| Cyclopentane | 0.00E+00 | 0.00E+00 | 0.00 | 0.00E+00 | 0.00E+00 | 0.00E+00 | 0.00E+00 | 0.00E+00 |
| Benzene | 1.58E-02 | 7.06E-01 | 0.14 | 0.00E+00 | 7.84E-02 | 6.87E-02 | 7.22E-03 | 3.44E-03 |
| Cyclohexane | 6.37E-02 | 3.96E+00 | 0.80 | 0.00E+00 | 4.45E-01 | 3.90E-01 | 4.02E-02 | 1.95E-02 |
| Methylcyclohexane | 0.00E+00 | 0.00E+00 | 0.00 | 0.00E+00 | 0.00E+00 | 0.00E+00 | 0.00E+00 | 0.00E+00 |
| 2,2,4-Trimethylpentane | 0.00E+00 | 0.00E+00 | 0.00 | 0.00E+00 | 0.00E+00 | 0.00E+00 | 0.00E+00 | 0.00E+00 |
| Toluene | 6.58E-03 | 3.04E-01 | 0.06 | 0.00E+00 | 3.17E-02 | 2.78E-02 | 3.11E-03 | 1.39E-03 |
| Ethylbenzene | 2.84E-04 | 1.37E-02 | 0.00 | 0.00E+00 | 1.33E-03 | 1.17E-03 | 1.40E-04 | 5.85E-05 |
| o-Xylene | 9.52E-04 | 4.02E-02 | 0.01 | 0.00E+00 | 3.84E-03 | 3.36E-03 | 4.12E-04 | 1.68E-04 |
| Octane | 3.42E-02 | 2.13E+00 | 0.43 | 0.00E+00 | 2.08E-01 | 1.82E-01 | 2.16E-02 | 9.09E-03 |
| **VOC** | **2.27** | **158.34** | **32.12** | **0.00** | **19.26** | **16.87** | **1.61** | **0.84** |
| **Total HAPS** | **0.21** | **14.21** | **2.89** | **0.00** | **1.62** | **1.42** | **0.14** | **0.07** |
| **$H_2S$** | **2.88E-04** | **1.86E-02** | **3.77E-03** | **0.00E+00** | **2.68E-03** | **2.35E-03** | **1.88E-04** | **1.17E-04** |

[1] Emissions from the condensate tanks are controlled by the combustor (COMB-1) with an assumed 95% DRE.

[2] Emissions are calculated using BR&E ProMax. Hourly loading emissions are based on the maximum hourly throughput of the facility. Annual emissions

*Targa Midstream Services LLC - Roadrunner Gas Processing Plant*

# Produced Water Storage Tank

Emission unit number(s): T-6
Source description: Produced Water Storage Tank

| | | |
|---|---|---|
| Annual Operating Hours: | 8,760 | |
| Control Efficiency: | 0% | |
| Number of Tanks: | 1 | |
| Capacity of Tanks: | 400 | bbl |
| Hourly Throughout: | 12.64 | bbl/hr |
| Daily Throughput: | 303.32 | bbl/d |
| Annual Throughput: | 24526 | bbl/yr |

**Produced Water Tank Emissions[1,2]**

| Component | Uncontrolled Emissions (hourly basis) | | | Uncontrolled Emissions (annual basis) | | | Controlled Emissions | |
|---|---|---|---|---|---|---|---|---|
| | Flash (lb/hr) | Working and Breathing (lb/hr) | Total per Tank (lb/hr) | Flash (lb/hr) | Working and Breathing (lb/hr) | Total Emissions Per Tank (tpy) | Total Emissions per Tank (lb/hr) | Total Emissions Per Tank (tpy) |
| Carbon Dioxide | 2.29E-01 | 3.04E-01 | 5.32E-01 | 2.29E-01 | 1.31E-02 | 1.06E+00 | 5.32E-01 | 1.06E+00 |
| Hydrogen Sulfide | 2.08E-03 | 3.11E-03 | 0.01 | 2.08E-03 | 1.17E-04 | 9.62E-03 | 5.19E-03 | 9.62E-03 |
| Nitrogen | 1.38E-03 | 5.16E-06 | 0.00 | 1.38E-03 | 1.08E-06 | 6.05E-03 | 1.39E-03 | 6.05E-03 |
| Methane | 2.30E-01 | 3.23E-03 | 0.23 | 2.30E-01 | 5.00E-04 | 1.01E+00 | 2.33E-01 | 1.01E+00 |
| Ethane | 1.92E-01 | 4.10E-03 | 0.20 | 1.92E-01 | 4.84E-04 | 8.45E-01 | 1.97E-01 | 8.45E-01 |
| Propane | 9.70E-02 | 3.11E-04 | 0.10 | 9.70E-02 | 4.16E-05 | 4.25E-01 | 9.73E-02 | 4.25E-01 |
| i-Butane | 1.03E-02 | 6.10E-06 | 0.01 | 1.03E-02 | 1.08E-06 | 4.53E-02 | 1.03E-02 | 4.53E-02 |
| n-Butane | 2.40E-02 | 1.73E-05 | 0.02 | 2.40E-02 | 2.25E-06 | 1.05E-01 | 2.40E-02 | 1.05E-01 |
| i-Pentane | 3.72E-03 | 5.71E-07 | 0.00 | 3.72E-03 | 9.22E-08 | 1.63E-02 | 3.72E-03 | 1.63E-02 |
| n-Pentane | 1.23E-03 | 5.38E-08 | 0.00 | 1.23E-03 | 9.07E-09 | 5.40E-03 | 1.23E-03 | 5.40E-03 |
| Hexane | 3.06E-04 | 2.42E-09 | 0.00 | 3.06E-04 | 4.40E-10 | 1.34E-03 | 3.06E-04 | 1.34E-03 |
| Heptane | 6.65E-05 | 1.05E-10 | 0.00 | 6.65E-05 | 2.05E-11 | 2.91E-04 | 6.65E-05 | 2.91E-04 |
| Cyclopentane | 1.07E-03 | 9.22E-07 | 0.00 | 1.07E-03 | 6.87E-08 | 4.69E-03 | 1.07E-03 | 4.69E-03 |
| Benzene | 3.54E-03 | 7.15E-05 | 0.00 | 3.54E-03 | 2.81E-06 | 1.55E-02 | 3.61E-03 | 1.55E-02 |
| Cyclohexane | 9.89E-04 | 2.48E-07 | 0.00 | 9.89E-04 | 1.78E-08 | 4.33E-03 | 9.89E-04 | 4.33E-03 |
| Methylcyclohexane | 2.20E-04 | 7.47E-09 | 0.00 | 2.20E-04 | 7.79E-10 | 9.65E-04 | 2.20E-04 | 9.65E-04 |
| 2,2,4-Trimethylpentane | 1.17E-05 | 2.31E-11 | 0.00 | 1.17E-05 | 6.23E-12 | 5.11E-05 | 1.17E-05 | 5.11E-05 |
| Toluene | 8.44E-04 | 3.94E-06 | 0.00 | 8.44E-04 | 1.45E-07 | 3.70E-03 | 8.48E-04 | 3.70E-03 |
| Ethylbenzene | 1.44E-04 | 1.90E-07 | 0.00 | 1.44E-04 | 7.39E-09 | 6.29E-04 | 1.44E-04 | 6.29E-04 |
| o-Xylene | 8.35E-05 | 1.20E-07 | 0.00 | 8.35E-05 | 4.46E-09 | 3.66E-04 | 8.36E-05 | 3.66E-04 |
| Octane | 1.60E-06 | 3.22E-13 | 0.00 | 1.60E-06 | 5.76E-14 | 7.03E-06 | 1.60E-06 | 7.03E-06 |
| Water | 1.26E-02 | 6.01E-01 | 0.61 | 1.26E-02 | 2.85E-02 | 1.80E-01 | 6.14E-01 | 1.80E-01 |
| **VOC** | **0.14** | **4.12E-04** | **0.14** | **0.14** | **4.81E-05** | **0.63** | **0.14** | **0.63** |
| **Total HAPS** | **4.93E-03** | **7.57E-05** | **5.00E-03** | **4.93E-03** | **2.97E-06** | **2.16E-02** | **5.00E-03** | **2.16E-02** |
| **$H_2S$** | **2.08E-03** | **3.11E-03** | **5.19E-03** | **2.08E-03** | **1.17E-04** | **9.62E-03** | **5.19E-03** | **9.62E-03** |

[1] Emissions from the produced water tank are uncontrolled.

[2] Emissions are calculated using BR&E ProMax. Hourly loading emissions are based on the maximum hourly throughput of the facility. Annual emissions are based on the average daily throughput of the facility.

**General Information**

Flare functions as emergency control device. When streams are fed to flare it will be treated as an emission event.

| | | |
|---|---|---|
| **(1) Flare Name:** | TO 1 | |
| **(2) Flare EPN:** | EP-9 | |
| **(3) What kind of device is this? Pick from list.** | Thermal Oxidizer | |
| | Emission Factors for Waste Gas Stream(s) (ppmv) | |
| | NOx | 50 |
| | CO | 40 |
| **(4) Is there one or more pilot streams fired with pipeline quality natural gas or propane? Pick Yes or No. Follow instructions below.** | No | |
| | Please move on to next question below. | |
| | Emission Factors for Pilot Stream (lb/MMscf) | |
| | NOx | 0 |
| | CO | 0 |
| **(5) Is there one or more pilot streams fired with field gas? Pick Yes or No. Follow instructions below.** | No | |
| | Please move on to next question below. | |
| | Emission Factors for Pilot Stream (ppmv) | |
| | NOx | 0 |
| | CO | 0 |
| **(6) Is there an added fuel stream made up of pipeline quality natural gas or propane? Pick Yes or No. Follow instructions below.** | Yes | |
| | Enter added fuel stream information into the boxes in the column for Steam No. 2 below. | |
| | Emission Factors for Added Fuel Stream (ppmv) | |
| | NOx | |
| | CO | |
| **(7) Is there an added fuel stream made up of field gas? Pick Yes or No. Follow instructions below.** | No | |
| | Please move on to next question below. | |
| | Emission Factors for Added Fuel Stream (lb/MMBtu) | |
| | NOx | 0 |
| | CO | 0 |
| **(8) VOC percent destruction efficiency (%)** | 99.9 | |
| **(9) propane percent destruction efficiency (%) *OPTIONAL*** | | |
| **(10) $H_2S$ percent destruction efficiency (%)** | 99.9 | |
| **(11) Which is utilized for this device?** | automatic ignition system | |

**Emission Factors**

**[2]Emission Factors from Zeeco Guarantee (lb/MMBtu)**

PM (Total) 0.008 lb/MMBtu

**[1]Manufacturers Guaranteed Outlet Concentration**

| Pollutant | (ppmv) | |
|---|---|---|
| NOx | 50 | |
| CO | 40 | |
| calculation factors: | | |
| NO2 MW | 46.006 | lb/lb-mole |
| CO MW | 28 | lb/lb-mole |
| Ideal Gas Law | 379.43 | SCF/lb-mole |

**Exhaust Stream per Zeeco Guarantee**

| Component | lb/hr | lb/lbmol | lbmol/hr | L/hr | vol% |
|---|---|---|---|---|---|
| CO2 | 33421 | 44 | 759.57 | 32,349,756 | 32% |
| H2O | 7086.1 | 18 | 393.67 | 16,766,369 | 17% |
| N2 | 31261.58 | 28 | 1110.93 | 47,314,154 | 47% |
| SO2 | 15.47 | 64 | 0.24 | 10,283 | 0.0102% |
| O2 | 3158.75 | 32 | 98.7109375 | 4,204,066 | 4.1771% |
| | | | | | 100% |

**Supplemental Fuel Gas per Zeeco Guarantee** **30 MMBtu/hr**
**Maximum Heating Value per Zeeco Guarantee** **75 MMBtu/hr**

**PV=nRT**

| | | |
|---|---|---|
| T= | 1600 F | 1,144 K |
| n= | 2,363 lbmol/hr | 1,071,889 gmol/hr |
| P= | 1 atm | 29.92 in Hg |
| R= | 0.082057 atm-L/mol-K | |
| V | 100,644,628 L/hr | 3,554,212 ft3/hr |
| T (act) | 1600 F | 2059.67 R |
| T (std) | | 327.67 R |
| V (std) | | 759,040 dscfh |
| V (std) | | 12,651 dscfm |
| **Safety Factor** | | **1.33** |
| **V (std) with safety factor** | | **1,009,523 dscfh** |

Emission Factors from AP-42 Table 1.4-3 (lb/MMscf)

| | |
|---|---|
| $SO_2$ | 0.6 |
| VOC | 5.5 |
| benzene | 2.10E-03 |
| propane | 1.60 |

| Stream Sent to Flare/Vapor Combustor No. | 1 | 2 | 3 | 4 | 5 | 6 | 7 | 8 | 9 | 10 | 11 | 12 | Total |
|---|---|---|---|---|---|---|---|---|---|---|---|---|---|
| Stream Sent to Flare/Vapor Combustor Name (Enter Names of Each Stream Here) | | Waste Gas from Dehy | Waste Gas from Amine | Supplemental Fuel | | | | | | | | | - |
| Maximum Expected Hourly Volumtric Flow Rate of Stream (scf/hr) | | 2577.989 | 790764 | 29,412 | | | | | | | | | 822753.6207 |
| Amount of Time Stream Fired (hrs/yr) | | 8760 | 8760 | 8760 | | | | | | | | | - |
| Maximum Expected Annual Volumtric Flow Rate of Stream (scf/yr) | | 22,583,187 | 6,927,091,472 | 257,647,059 | | | | | | | | | 7,207,321,718 |
| Heat Value of Stream - from program results or gas analysis (Btu/scf) | | 2550 | 23.70 | 1,020 | | | | | | | | | - |
| propane weight percent of total stream (%) *OPTIONAL* | | | | | | | | | | | | | - |
| VOC weight percent of total stream (%) *OPTIONAL* | | | | | | | | | | | | | - |

**Hourly (lb/hr)**

| Stream Sent to Flare/Vapor Combustor No. | 1 | 2 | 3 | 4 | 5 | 6 | 7 | 8 | 9 | 10 | 11 | 12 | Total |
|---|---|---|---|---|---|---|---|---|---|---|---|---|---|
| Stream Sent to Flare/Vapor Combustor Name | | Waste Gas from Dehy | Waste Gas from Amine | Supplemental Fuel | | | | | | | | | - |
| H2S | - | 6.45E-05 | 14.17 | | | | | | | | | | 14.17 |
| Crude or Condensate VOC | - | | | | | | | | | | | | 0.00 |
| Natural Gas VOC | - | 306.44 | 224.00 | | | | | | | | | | 530.44 |
| Total VOC | - | 306.44 | 224.00 | | | | | | | | | | 530.44 |
| benzene | - | 42.57 | 90.79 | | | | | | | | | | 133.37 |
| **Annual (tpy)** | | | | | | | | | | | | | |
| H2S | - | 2.82E-04 | 62 | | | | | | | | | | 62.05 |
| Crude or Condensate VOC | - | 0.00 | 0.00 | | | | | | | | | | 0.00 |
| Natural Gas VOC | - | 1342.19 | 981.12 | | | | | | | | | | 2323.31 |
| Total VOC | - | 1342.19 | 981.12 | | | | | | | | | | 2323.31 |
| benzene | - | 186.47 | 397.67 | | | | | | | | | | 584.14 |

**Controlled Emissions**

**Hourly (lb/hr)**

| Stream Sent to Flare/Vapor Combustor No. | 1 | 2 | 3 | 4 | 5 | 6 | 7 | 8 | 9 | 10 | 11 | 12 | Total |
|---|---|---|---|---|---|---|---|---|---|---|---|---|---|
| Stream Sent to Flare/Vapor Combustor Name | | Waste Gas from Dehy | Waste Gas from Amine | Supplemental Fuel | | | | | | | | | - |
| NOx | 0.000 | --[1] | --[1] | --[1] | 0.000 | 0.000 | 0.000 | 0.000 | 0.000 | 0.000 | 0.000 | 0.000 | **6.12** |
| CO | 0.000 | --[1] | --[1] | --[1] | 0.000 | 0.000 | 0.000 | 0.000 | 0.000 | 0.000 | 0.000 | 0.000 | **2.98** |
| PM2.5 | 0.000 | --[2] | --[2] | --[2] | 0.000 | 0.000 | 0.000 | 0.000 | 0.000 | 0.000 | 0.000 | 0.000 | **0.60** |
| PM10 | 0.000 | --[2] | --[2] | --[2] | 0.000 | 0.000 | 0.000 | 0.000 | 0.000 | 0.000 | 0.000 | 0.000 | **0.60** |
| H2S | 0.000 | 0.000 | 0.014 | 0.000 | 0.000 | 0.000 | 0.000 | 0.000 | 0.000 | 0.000 | 0.000 | 0.000 | **0.01** |
| SO2 | 0.000 | 0.000 | 26.665 | 0.000 | 0.000 | 0.000 | 0.000 | 0.000 | 0.000 | 0.000 | 0.000 | 0.000 | **26.66** |
| Crude or Condensate VOC | - | - | 0.000 | 0.000 | 0.000 | 0.000 | 0.000 | 0.000 | 0.000 | 0.000 | 0.000 | 0.000 | **0.00** |
| Natural Gas VOC | 0.00 | 0.31 | 0.224 | 0.000 | 0.000 | 0.000 | 0.000 | 0.000 | 0.000 | 0.000 | 0.000 | 0.000 | **0.53** |
| Total VOC | 0.00 | 0.31 | 0.224 | 0.000 | 0.000 | 0.000 | 0.000 | 0.000 | 0.000 | 0.000 | 0.000 | 0.000 | **0.53** |
| benzene | 0.000 | 0.04257 | 0.091 | 0.000 | 0.000 | 0.000 | 0.000 | 0.000 | 0.000 | 0.000 | 0.000 | 0.000 | **0.13** |

**Annual (tpy)**

| Stream Sent to Flare/Vapor Combustor No. | 1 | 2 | 3 | 4 | 5 | 6 | 7 | 8 | 9 | 10 | 11 | 12 | Total |
|---|---|---|---|---|---|---|---|---|---|---|---|---|---|
| Stream Sent to Flare/Vapor Combustor Name | | Waste Gas from Dehy | Waste Gas from Amine | Supplemental Fuel | | | | | | | | | - |
| NOx | 0.000 | --[1] | --[1] | --[1] | 0.000 | 0.000 | 0.000 | 0.000 | 0.000 | 0.000 | 0.000 | 0.000 | **26.81** |
| CO | 0.000 | --[1] | --[1] | --[1] | 0.000 | 0.000 | 0.000 | 0.000 | 0.000 | 0.000 | 0.000 | 0.000 | **13.05** |
| PM2.5 | 0.000 | --[2] | --[2] | --[2] | 0.000 | 0.000 | 0.000 | 0.000 | 0.000 | 0.000 | 0.000 | 0.000 | **2.63** |
| PM10 | 0.000 | --[2] | --[2] | --[2] | 0.000 | 0.000 | 0.000 | 0.000 | 0.000 | 0.000 | 0.000 | 0.000 | **2.63** |
| H2S | 0.000 | 0.000 | 0.062 | 0.000 | 0.000 | 0.000 | 0.000 | 0.000 | 0.000 | 0.000 | 0.000 | 0.000 | **0.06** |
| SO2 | 0.000 | 0.001 | 116.792 | 0.000 | 0.000 | 0.000 | 0.000 | 0.000 | 0.000 | 0.000 | 0.000 | 0.000 | **116.79** |
| Crude or Condensate VOC | - | - | 0.000 | 0.000 | 0.000 | 0.000 | 0.000 | 0.000 | 0.000 | 0.000 | 0.000 | 0.000 | **0.00** |
| Natural Gas VOC | 0.000 | 1.342 | 0.981 | 0.000 | 0.000 | 0.000 | 0.000 | 0.000 | 0.000 | 0.000 | 0.000 | 0.000 | **2.32** |
| Total VOC | 0.000 | 1.342 | 0.981 | 0.000 | 0.000 | 0.000 | 0.000 | 0.000 | 0.000 | 0.000 | 0.000 | 0.000 | **2.32** |
| benzene | 0.000 | 0.0000 | 0.398 | 0.000 | 0.000 | 0.000 | 0.000 | 0.000 | 0.000 | 0.000 | 0.000 | 0.000 | **0.40** |

[1] CO and NOx emissions calculated based on the emission gurantees from manufacturer and the exhaust flue from the TO.

[2] $PM_{10}/PM_{2.5}$ emissions based on the emission guarantee from the manufacturer and the maximum heating rate of the TO.

**Flare/Vapor Combustor Total Emissions (Each TO)**

| | Hourly Emissions (lb/hr) | Annual Emissions (tpy) |
|---|---|---|
| Crude or Condensate VOC | 0.00 | 0.00 |
| Natural Gas VOC | 0.53 | 2.32 |
| Total VOC | 0.53 | 2.32 |
| NOx | 6.12 | 26.81 |
| CO | 2.98 | 13.05 |
| PM2.5 | 0.60 | 2.63 |
| PM10 | 0.60 | 2.63 |
| H2S | 0.01 | 0.06 |
| SO2 | 26.66 | 116.79 |
| benzene | 0.13 | 0.40 |

*Targa Midstream Services LLC - Roadrunner Gas Processing Plant*

# Thermal Oxidizer Downtime

Emission Unit: SSM-TO

Source Description: Thermal Oxidizer downtime during scheduled maintenance events.

Annual Downtime: 20 hrs/yr

| | Uncontrolled Emissions | | Thermal Oxidizer Downtime | |
|---|---|---|---|---|
| | EP-8, 2-EP-8, 3-EP-8 | EP-7, 2-EP-7, and 3-EP-7 | Total | |
| **Components** | **lb/hr** | **lb/hr** | **lb/hr** | **ton/yr** |
| H2S² | 14.17 | 0.000017 | 14.17 | 0.14 |
| SO23 | 0.00 | 0.00014 | 1.42E-04 | 1.42E-06 |
| CO2 | 85,277.07 | 0.000011 | 85277.07 | 852.77 |
| N2 | 0.13 | 0.0063 | 0.14 | 0.001 |
| Methane | 78.29 | 4.20 | 82.48 | 0.82 |
| Ethane | 57.56 | 11.02 | 68.58 | 0.69 |
| Propane | 24.52 | 20.18 | 44.71 | 0.45 |
| i-Butane | 2.53 | 4.90 | 7.43 | 0.07 |
| n-Butane | 11.35 | 19.25 | 30.60 | 0.306 |
| i-Pentane | 0.71 | 7.44 | 8.15 | 0.082 |
| n-Pentane | 1.26 | 9.88 | 11.14 | 0.111 |
| n-Hexane | 0.72 | 10.35 | 11.07 | 0.111 |
| n-Heptane | 0.11 | 6.51 | 6.62 | 0.0662 |
| n-Octane | 0.02 | 0.70 | 7.24E-01 | 7.24E-03 |
| n-Nonane | 0.00 | 0.00E+00 | 0.00E+00 | 0.00E+00 |
| n-Decane | 0.00 | 0.00E+00 | 0.00E+00 | 0.00E+00 |
| Undecane | 0.00 | 0.00E+00 | 0.00 | 0.00 |
| Benzene | 90.79 | 14.02 | 104.82 | 1.05 |
| Toluene | 56.20 | 6.45 | 62.65 | 0.63 |
| Ethylbenzene | 18.11 | 1.46 | 19.57 | 0.196 |
| m-Xylene | 17.67 | 0.99 | 18.66 | 0.19 |
| Water | 2,506.19 | 4.87 | 2511.05 | 25.11 |
| MDEA | 8.27E-05 | 1.72E-04 | 2.55E-04 | 2.55E-06 |
| Piperazine | 9.05E-05 | 5.68E-06 | 9.62E-05 | 9.62E-07 |
| TEG | 0.00E+00 | 0.00E+00 | 0.00E+00 | 0.00E+00 |
| **Total VOC:** | 224.00 | 102.15 | 326.15 | 3.26 |
| **Total HAPs:** | 183.50 | 33.28 | 216.77 | 2.17 |
| **Total H2S:** | 14.17 | 0.00 | 14.17 | 0.14 |

**Targa Midstream Services LLC - Roadrunner Gas Processing Plant**
**Flare- Inlet Gas Flare Stream Analysis**

| | |
|---|---|
| Emission Unit: | EP-1, 2-EP-1, and 3-EP-1 |
| Source Description: | Process Flares |
| Destruction Efficiency: | 98% |

**Annual Inlet Gas Flared Gas Volume:**[1]

| | | |
|---|---|---|
| Estimated Total Annual Gas (MSCF/yr): | 240,000.0 | Requested Annual Volume per Train |
| Manuf. Daily Gas Volume (MSCF/day): | 240,000.0 | Hourly Treatment Train Gas Flowrate |
| Max Hourly Flared Gas (MSCF/hr): | 10,000.0 | |

| Component | Mol Wt (lb/lb-mol) [2] | Component Net Heating Value (BTU/scf) [2] | Inlet Gas Analysis 11/20/2019 Date: mol% |
|---|---|---|---|
| Nitrogen | 28.013 | 0 | 1.39700% |
| Methane | 16.043 | 909 | 76.98300% |
| Carbon Dioxide | 44.010 | 0 | 0.33000% |
| Hydrogen Sulfide* | 34.081 | 587 | 0.05000% |
| Ethane | 30.069 | 1,619 | 12.23400% |
| Propane | 44.096 | 2,315 | 5.66800% |
| Iso-Butane | 58.122 | 3,000 | 0.71700% |
| n-Butane | 58.122 | 3,011 | 1.59500% |
| Iso-Pentane | 72.149 | 3,699 | 0.28700% |
| n-Pentane | 72.149 | 3,707 | 0.28800% |
| i-Hexanes | 86.175 | 4,404 | 0.17900% |
| n-Hexane | 86.175 | 4,404 | 0.10500% |
| Benzene | 78.112 | 3,591 | 0.01700% |
| Cyclohexane | 84.160 | 4,180 | 0.04800% |
| i-Heptanes | 100.202 | 5,100 | 0.09100% |
| n-Heptane | 100.202 | 5,100 | 0.01700% |
| Toluene | 92.138 | 4,273 | 0.00700% |
| i-Octanes | 114.229 | 5,796 | 0.03400% |
| n-Octane | 114.229 | 5,796 | 0.00200% |
| i-Nonanes | 128.255 | 6,493 | 0.00100% |
| **TOTAL =** | **21.30** | **1143.57** | **100.05%** |

*Hydrogen Sulfide conservatively assumed to be 5 ppm.

**Stream Emission Calculation:**

| Components | Hourly Emissions (pph)[3] | Annual Emissions (tpy)[3] | Hourly MMBTU Rate [4] MMBTU/hr | Total Net MMBTU [4] MMBTU/yr |
|---|---|---|---|---|
| Nitrogen | 10314.75 | 123.78 | 0.00 | 0.00 |
| Methane | 325524.06 | 3906.29 | 7000.83 | 168020.02 |
| Hydrogen Sulfide* | 449.14 | 5.39 | 2.93 | 70.41 |
| Carbon Dioxide | 3827.97 | 45.94 | 0.00 | 0.00 |
| Ethane | 96959.45 | 1163.51 | 1980.68 | 47536.43 |
| Propane | 65876.68 | 790.52 | 1312.14 | 31491.41 |
| Iso-Butane | 10984.05 | 131.81 | 215.10 | 5162.40 |
| n-Butane | 24434.53 | 293.21 | 480.25 | 11526.11 |
| Iso-Pentane | 5457.77 | 65.49 | 106.16 | 2547.87 |
| n-Pentane | 5476.78 | 65.72 | 106.76 | 2562.28 |
| i-Hexanes | 4065.72 | 48.79 | 78.83 | 1891.96 |
| n-Hexane | 2384.92 | 28.62 | 46.24 | 1109.81 |
| Benzene | 350.00 | 4.20 | 6.10 | 146.51 |
| Cyclohexane | 1064.75 | 12.78 | 20.06 | 481.54 |
| i-Heptanes | 2403.37 | 28.84 | 46.41 | 1113.84 |
| n-Heptane | 448.98 | 5.39 | 8.67 | 208.08 |
| Toluene | 170.00 | 2.04 | 2.99 | 71.79 |
| i-Octanes | 1023.67 | 12.28 | 19.71 | 472.95 |
| n-Octane | 60.22 | 0.72 | 1.16 | 27.82 |
| i-Nonanes | 33.80 | 0.41 | 0.65 | 15.58 |
| | | **Total BTU Values =** | **11,435.70** | **274,456.81** |

*Hydrogen Sulfide conservatively assumed to be 10 ppm.

| Gas Flaring Summary | pph | tpy |
|---|---|---|
| **Total =** | 561,310.58 | 6,735.73 |
| **Total VOC =** | 124,235.22 | 1,490.82 |
| **Total HAP =** | 2,904.91 | 34.859 |
| **Total Hexane =** | 2,384.92 | 28.619 |
| **Total $H_2S$ =** | 449.14 | 5.39 |

| Controlled Flaring Stream[5] | pph | tpy |
|---|---|---|
| **Total VOC =** | 2,484.70 | 29.82 |
| **Total HAP =** | 58.10 | 0.70 |
| **Total Hexane =** | 47.70 | 0.57 |
| **Total $H_2S$ =** | 8.98 | 0.11 |

Notes:
(1) Conservatively estimated annual gas volume. Max anticipated hourly volume based on manufacturer rated capacity.
(2) Component Molecular Weights from the following source: BR&E Promax
Component Net Heating Values from the following source: BR&E Promax
(3) Hourly and Annual Event gas emissions calculated as follows:
Hourly Emissions (lb/hr) = Hourly Gas Volume (scf/hr) * Component Mol Wt (lb/lb-mol) * Component Mole% / 379.4 ft $^3$/lb mol
Annual Emissions (tpy) = Annual Gas Volume (scf/yr) * Component Mol Wt (lb/lb-mol) * Component Mole% / 379.4 ft $^3$/lb mol / 2000 lb/ton
(4) Component MMBTU/hr = [ Component Hourly Emissions (pph) * Component Net Heating Value (BTU/scf) * 379.4 ft $^3$/lb-mol ] / Component Mol Wt (lb/lb-mol)
Component MMBTU/yr = [ Component Annual Emissions (tpy) * 2000 lb/ton * Component Net Heating Value (BTU/scf) * 379.4 ft $^3$/lb-mol ] / Component Mol Wt (lb/lb-mol)
Total Net MMBTU/event = Sum of all Individual Component MMBTU/event
(5) VOC, HAP and H2S emissions estimated based on event stream routed to flare and 98% efficiency.

**Targa Midstream Services LLC - Roadrunner Gas Processing Plant**
**Flare- Residue Gas Flare Stream Analysis**

| | |
|---|---|
| Emission Unit: | EP-1, 2-EP-1, and 3-EP-1 |
| Source Description: | Process Flares |
| Destruction Efficiency: | 98% |

**Annual Residue Gas Flared Gas Volume:[1]**

| | | |
|---|---|---|
| Estimated Total Annual Gas (MSCF/yr): | 25.0 | Requested Annual Volume per Train |
| Manuf. Daily Gas Volume (MSCF/day): | 600.0 | Hourly Treatment Train Gas Flowrate |
| Max Hourly Flared Gas (MSCF/hr): | 25.0 | |

| Component | Mol Wt (lb/lb-mol) [2] | Component Net Heating Value (BTU/scf) [2] | Cold Flare Gas Analysis Date: 11/18/2022 mol% |
|---|---|---|---|
| Helium | 4.003 | 0 | 0.0000% |
| Nitrogen | 28.013 | 0 | 3.3642% |
| Carbon Dioxide | 44.010 | 0 | 0.0622% |
| Oxygen | 31.999 | 0 | 0.3086% |
| Hydrogen Sulfide | 34.081 | 587 | 0.0000% |
| Methane | 16.043 | 909 | 79.7621% |
| Ethane | 30.069 | 1,619 | 10.5912% |
| Propane | 44.096 | 2,315 | 3.6250% |
| i-Butane | 58.122 | 3,000 | 0.4816% |
| n-Butane | 58.122 | 3,011 | 1.0176% |
| i-Pentane | 72.149 | 3,699 | 0.2340% |
| n-Pentane | 72.149 | 3,707 | 0.2388% |
| Neopentane | 72.149 | 3,707 | 0.0085% |
| Hexanes+ | 87.090 | 4,475 | 0.1872% |
| n-Hexane | 86.175 | 4,404 | 0.0513% |
| Benzene | 78.112 | 3,591 | 0.0309% |
| Toluene | 92.138 | 4,273 | 0.0311% |
| 2,2,4-Trimethylpentane | 114.229 | 5,796 | 0.0003% |
| Ethylbenzene | 106.165 | 4,971 | 0.0013% |
| O-Xylene | 106.165 | 4,905 | 0.0040% |
| **TOTAL =** | **20.13** | **1057.02** | **100.00%** |

**Stream Emission Calculation:**

| Components | Hourly Emissions (pph)[3] | Annual Emissions (tpy)[3] | Hourly MMBTU Rate [4] MMBTU/hr | Total Net MMBTU [4] MMBTU/yr |
|---|---|---|---|---|
| Helium | 0.00 | 0.00E+00 | 0.00E+00 | 0.00E+00 |
| Nitrogen | 62.10 | 3.10E-02 | 0.00E+00 | 0.00E+00 |
| Oxygen | 1.80 | 9.02E-04 | 0.00E+00 | 0.00E+00 |
| Carbon Dioxide | 6.51 | 3.25E-03 | 0.00E+00 | 0.00E+00 |
| Hydrogen Sulfide | 0.00 | 0.00E+00 | 0.00E+00 | 0.00E+00 |
| Methane | 843.19 | 4.22E-01 | 1.81E+01 | 1.81E+01 |
| Ethane | 209.85 | 1.05E-01 | 4.29E+00 | 4.29E+00 |
| Propane | 105.33 | 5.27E-02 | 2.10E+00 | 2.10E+00 |
| i-Butane | 18.44 | 9.22E-03 | 3.61E-01 | 3.61E-01 |
| n-Butane | 38.97 | 1.95E-02 | 7.66E-01 | 7.66E-01 |
| i-Pentane | 11.12 | 5.56E-03 | 2.16E-01 | 2.16E-01 |
| n-Pentane | 11.35 | 5.68E-03 | 2.21E-01 | 2.21E-01 |
| Neopentane | 0.40 | 2.02E-04 | 7.88E-03 | 7.88E-03 |
| Hexanes+ | 10.74 | 5.37E-03 | 2.09E-01 | 2.09E-01 |
| n-Hexane | 2.91 | 1.46E-03 | 5.65E-02 | 5.65E-02 |
| Benzene | 1.59 | 7.95E-04 | 2.77E-02 | 2.77E-02 |
| Toluene | 1.89 | 9.45E-04 | 3.33E-02 | 3.33E-02 |
| 2,2,4-Trimethylpentane | 0.03 | 1.29E-05 | 4.97E-04 | 4.97E-04 |
| Ethylbenzene | 0.09 | 4.62E-05 | 1.64E-03 | 1.64E-03 |
| O-Xylene | 0.28 | 1.40E-04 | 4.90E-03 | 4.90E-03 |
| | | **Total BTU Values =** | **26.43** | **26.43** |

| **Gas Flaring Summary** | | |
|---|---|---|
| | **pph** | **tpy** |
| **Total =** | 1,326.61 | 0.66 |
| **Total VOC =** | 203.16 | 0.102 |
| **Total HAP =** | 6.79 | 0.0034 |
| **Total Hexane =** | 2.91 | 0.001 |
| **Total $H_2S$ =** | 0.00E+00 | 0.00E+00 |

| **Controlled Flaring Stream[5]** | | |
|---|---|---|
| | **pph** | **tpy** |
| **Total VOC =** | 4.06 | 2.03E-03 |
| **Total HAP =** | 0.14 | 6.79E-05 |
| **Total Hexane =** | 0.058 | 2.91E-05 |
| **Total $H_2S$ =** | 0.00E+00 | 0.00E+00 |

Notes:
(1) Conservatively estimated annual gas volume. Max anticipated hourly volume based on manufacturer rated capacity.
(2) Component Molecular Weights from the following source: BR&E Promax
Component Net Heating Values from the following source: BR&E Promax
(3) Hourly and Annual Event gas emissions calculated as follows:
Hourly Emissions (lb/hr) = Hourly Gas Volume (scf/hr) * Component Mol Wt (lb/lb-mol) * Component Mole% / 379.4 $ft^3$/lb mol
Annual Emissions (tpy) = Annual Gas Volume (scf/yr) * Component Mol Wt (lb/lb-mol) * Component Mole% / 379.4 $ft^3$/lb mol / 2000 lb/ton
(4) Component MMBTU/hr = [ Component Hourly Emissions (pph) * Component Net Heating Value (BTU/scf) * 379.4 $ft^3$/lb-mol ] / Component Mol Wt (lb/lb-mol)
Component MMBTU/yr = [ Component Annual Emissions (tpy) * 2000 lb/ton * Component Net Heating Value (BTU/scf) * 379.4 $ft^3$/lb-mol ] / Component Mol Wt (lb/lb-mol)
Total Net MMBTU/event = Sum of all Individual Component MMBTU/event
(5) VOC, HAP and H2S emissions estimated based on event stream routed to flare and 98% efficiency.

TARGA

**Targa Midstream Services LLC - Roadrunner Gas Processing Plant**

## Process Flares

| | |
|---|---|
| Emission Units: | EP-1, 2-EP-1, and 3-EP-1 |
| Source Description: | Process Flares |
| Destruction Efficiency: | 98% |

| Flare Information | |
|---|---|
| Unit(s): | EP-1, 2-EP-1, and 3-EP-1 |
| Unit Count: | 3 |
| Annual Operating Hours: | 8,760 |
| Combustion Efficiency (%): | 98% |

| Input Information [1] | | | | |
|---|---|---|---|---|
| **Activity** | **Parameters** | **Value** | **Unit** | **Notes:** |
| EP-1 Pilot | Hourly Volume Flow Rate | 500.0 | scf/hr | Design Specification |
| | Natural Gas Heat Value | 1071.8 | BTU/scf | Fuel Gas Heat Value |
| | Annual Volume Flow Rate | 4.38 | MMscf/yr | |
| | Hourly Heat Rate | 0.536 | MMBtu/hr | |
| | Annual Heat Rate | 4694.48 | MMBtu/yr | |
| EP-1 Purge Gas | Hourly Volume Flow Rate | 980.0 | scf/hr | Design Specification |
| | Natural Gas Heat Value | 1071.8 | BTU/scf | Fuel Gas Heat Value |
| | Annual Volume Flow Rate | 8.58 | MMscf/yr | |
| | Hourly Heat Rate | 1.050 | MMBtu/hr | |
| | Annual Heat Rate | 9201.19 | MMBtu/yr | |
| EP-1 Alternate Scenario Amine Vent Stream | Hourly Volume Flow Rate | 28227.0 | scf/hr | Amine Flash Gas Stream Flow from Promax |
| | Stream Heat Value | 1197.7 | BTU/scf | Amine Flash Gas Heat Value from Promax |
| | Annual Operating Hours | 350.0 | hr/yr | |
| | Annual Volume Flow Rate | 9.88 | MMscf/yr | Amine Stream Hourly Flow (scf/hr) * 350 (hr/yr) / 10^6 |
| | Hourly Heat Rate | 33.807 | MMBtu/hr | |
| | Annual Heat Rate | 11832.36 | MMBtu/yr | |
| | Hourly VOC Flow | 5317.50 | lb/hr | |
| | Annual VOC Flow | 930.56 | tpy | |
| | Hourly $H_2S$ Flow | 0.037 | lb/hr | |
| | Annual $H_2S$ Flow | 0.0065 | tpy | |
| | Hourly HAP Flow | 28.86 | lb/hr | |
| | Annual HAP Flow | 5.051 | tpy | |
| 2-EP-1 Pilot | Hourly Volume Flow Rate | 78.0 | scf/hr | Design Specification |
| | Natural Gas Heat Value | 1071.8 | BTU/scf | Fuel Gas Heat Value |
| | Annual Volume Flow Rate | 0.68 | MMscf/yr | |
| | Hourly Heat Rate | 0.084 | MMBtu/hr | |
| | Annual Heat Rate | 732.34 | MMBtu/yr | |
| 2-EP-1 Purge Gas | Hourly Volume Flow Rate | 1040.0 | scf/hr | Design Specification |
| | Natural Gas Heat Value | 1071.8 | BTU/scf | Fuel Gas Heat Value |
| | Annual Volume Flow Rate | 9.11 | MMscf/yr | |
| | Hourly Heat Rate | 1.115 | MMBtu/hr | |
| | Annual Heat Rate | 9764.53 | MMBtu/yr | |
| 3-EP-1 Pilot | Hourly Volume Flow Rate | 219.0 | scf/hr | Design Specification |
| | Natural Gas Heat Value | 1071.8 | BTU/scf | Fuel Gas Heat Value |
| | Annual Volume Flow Rate | 1.92 | MMscf/yr | |
| | Hourly Heat Rate | 0.235 | MMBtu/hr | |
| | Annual Heat Rate | 2056.18 | MMBtu/yr | |

[1] Pilot and Purge rates for EP-1, 2-EP-2, and 3-EP-3 based on manufacturer specification sheet for each flare.

**Pilot Emission Calculation**

| **Description** | **$NO_X$[1]** | **CO[1]** | **VOC** | **$SO_2$[1]** | **$H_2S$[1]** | **HAPs** | **Units** | **Notes** |
|---|---|---|---|---|---|---|---|---|
| Emission Factors | 0.138 | 0.2755 | | | | | lb/MMBTU | TNRCC RG-109 (high Btu; other) |
| | | | | | | | | |
| Fuel Sulfur and $H_2S$ Content | | | | 2.0 | | | gr S/100scf | Conservative assumption for fuel sulfur content (gr/100scf) |
| | | | | 0.0029 | | | lb S/ Mscf | Gr S/100 scf * (1 lb/7000 gr) * (1000scf/Mscf) |
| | | | | | 10 | | ppm | Pipeline Specification |
| | | | | | 0.6 | | gr $H_2S$ /100scf | Pilot gas $H_2S$ content |
| | | | | | 0.001 | | lb $H_2S$/Mscf | |
| EP-1 Pilot Emissions | 0.074 | 0.15 | - | 0.0037 | 8.95E-06 | - | lb/hr | |
| | 0.32 | 0.65 | - | 0.016 | 3.92E-05 | - | tpy | |
| 2-EP-1 Pilot Emissions | 0.012 | 0.023 | - | 0.00057 | 1.40E-06 | - | lb/hr | |
| | 0.05 | 0.10 | - | 0.0025 | 6.11E-06 | - | tpy | |
| 3-EP-1 Pilot Emissions | 0.032 | 0.065 | - | 0.0016 | 1.40E-06 | - | lb/hr | |
| | 0.14 | 0.28 | - | 0.0071 | 6.11E-06 | - | tpy | |
| EP-1 Purge Emissions | 0.14 | 0.29 | - | 0.0056 | 1.75E-05 | - | lb/hr | |
| | 0.63 | 1.27 | - | 0.025 | 7.68E-05 | - | tpy | |
| EP-1 Amine Emissions | 4.67 | 9.31 | 106.35 | 0.070 | 7.40E-04 | 0.58 | lb/hr | |
| | 0.82 | 1.63 | 18.61 | 0.012 | 1.30E-04 | 0.10 | tpy | |
| 2-EP-1 Purge Emissions | 0.15 | 0.31 | - | 0.0077 | 1.86E-05 | - | lb/hr | |
| | 0.67 | 1.35 | - | 0.034 | 8.15E-05 | - | tpy | |
| Process Emissions per Flare | 1578.13 | 3150.54 | 2484.70 | 828.54 | 8.98 | 58.10 | lb/hr | Process emissions represent inlet and residue gas flaring when gas can not be sent to sales. |
| | 18.94 | 37.81 | 29.82 | 9.94 | 0.108 | 0.70 | tpy | |
| **Total EP-1 Flare Emissions** | 1583.01 | 3160.29 | 2591.05 | 828.62 | 8.98 | 58.68 | lb/hr | |
| | 20.71 | 41.35 | 48.43 | 10.00 | 0.11 | 0.80 | tpy | |
| **Total 2-EP-1 Flare Emissions** | 1578.29 | 3150.87 | 2484.70 | 828.55 | 8.98 | 58.10 | lb/hr | |
| | 19.66 | 39.26 | 29.82 | 9.98 | 0.108 | 0.70 | tpy | |
| **Total 3-EP-1 Flare Emissions** | 1578.16 | 3150.60 | 2484.70 | 828.54 | 8.98 | 58.10 | lb/hr | |
| | 19.08 | 38.09 | 29.82 | 9.95 | 0.108 | 0.70 | tpy | |

**Inlet Gas Flaring Emissions Calculations per Flare**

| **Unit ID** | **Pollutant** | **Emission Factors (lb/MMBTU)[1]** | **Emissions lb/hr** | **Emissions tons/yr** |
|---|---|---|---|---|
| EP-1, 2-EP-1, 3-EP-1 | $NO_X$ | 0.138 | 1578.13 | 18.938 |
| | CO | 0.2755 | 3150.54 | 37.806 |
| | VOC | Mass Balance [2] | 2484.70 | 29.82 |
| | HAP | Mass Balance [2] | 58.10 | 0.697 |
| | $H_2S$ | Mass Balance [2] | 8.98 | 0.108 |
| | $SO_2$ | Stoichiometric[1] | 828.54 | 9.94 |

Flare Stream [3]: 11,435.70 Max Net Hourly MMBTU Value (MMBTU/hr)
274,456.81 Net Annual MMBTU Value (MMBTU/yr)

**Residue Gas Flaring Emissions Calculations per Flare**

| **Unit ID** | **Pollutant** | **Emission Factors (lb/MMBTU)[1]** | **Emissions lb/hr** | **Emissions tons/yr** |
|---|---|---|---|---|
| EP-1, 2-EP-1, 3-EP-1 | $NO_X$ | 0.138 | 3.65 | 1.82E-03 |
| | CO | 0.2755 | 7.28 | 3.64E-03 |
| | VOC | Mass Balance [2] | 4.06 | 2.03E-03 |
| | HAP | Mass Balance [2] | 0.14 | 6.79E-05 |
| | $H_2S$ | Mass Balance [2] | 0.00 | 0.00E+00 |
| | $SO_2$ | Stoichiometric[1] | 0.00 | 0.00E+00 |

Flare Stream [3]: 26.43 Max Net Hourly MMBTU Value (MMBTU/hr)
26.43 Net Annual MMBTU Value (MMBTU/yr)

Notes:

(1) Flare $NO_X$ and CO emission factors: TNRCC RG-109 (high Btu; other). $SO_2$: Mass balance assuming 98% combustion of $H_2S$ and 100% conversion of combusted $H_2S$ to $SO_2$:
Pilot Gas $SO_2$ Emissions (lb/hr) = [(Pilot Gas Flow (Mscf/hr) * Fuel Gas Sulfur Content (lb S/Mscf)*(64 lb/lbmol SQ / 32 lb/lbmol S)) + ( Pilot Gas Flow (Mscf/hr) * Fuel Gas $H_2S$ Content (lb $H_2S$/Mscf)*(64 lb/lbmol $SO_2$ /34 lb/lbmol $H_2S$)*(DRE))]
Pilot Gas $H_2S$ Emissions (lb/hr) = [ Pilot Gas Flow Rate (Mscf/hr) * Fuel Gas $H_2S$ Content (lb $H_2S$/Mscf) * (1 - DRE) ]
Process $SO_2$ Emissions (lb/hr) = [ $H_2S$ Mass Flow Rate (lb/hr) * DRE * (64 lb/lbmol $SO_2$ / 34 lb/lbmol $H_2S$) ]
Process $SO_2$ Emissions (tpy) = [ $H_2S$ Mass Flow Rate (tpy) * DRE * (64 lb/lbmol $SO_2$ / 34 lb/lbmol $H_2S$) ]

(2) VOC, HAP and $H_2S$ emissions estimated based on event stream routed to flare and 98% efficiency.

(3) Flare stream includes inlet and residue gas.

| | |
|---|---|
| **Emission Unit** | MSST |
| Name | Condensate Tanks |
| Tank No.: | 5 |
| Product stored: | Condensate |
| Type of tank roof | Fixed Roof |
| Tank Capacity (bbl) | 1,000 |
| Tank Diameter (ft) (D) | 21.50 |
| Vapor Molecular Wt. (lb/lb mol) ($M_v$) | 72.77 |
| Number of events/yr | 5 |
| Height of the roof (ft) | 16.00 |
| Saturation factor (S) | 1.0 |

| | |
|---|---|
| Vapor Space Volume ($ft^3$) ($V_v$) | 5808.80 |
| Height of Vapor Space under roof (ft)* ($h_v$) | 16.00 |

| | Max. hourly emissions lb/hr | Avg.Annual emissions tpy | |
|---|---|---|---|
| Duration of activity (hrs/event) | 1 | 1 | |
| True Vapor Pressure (psia) (P) | 11.23 | 6.79 | Max > Avg |
| Day time temperature (°F) | 95.00 | 63.20 | Max > Avg |
| Night time temperature (°F) | 68.00 | 49.10 | |
| Temperature Expansion % | 4.86 | 2.69 | |
| Emissions (lb/event) | 797.06 | 511.07 | |
| Max. Hourly Emissions (lb/hr) | 38.78 | | |
| Avg. Hourly Emissions (lb/hr) | | 13.77 | |
| Avg. Annual emissions (tpy) | | 0.03 | |

| | |
|---|---|
| VOC Wt% | 98.41 |
| $H_2S$ Wt% | - |
| Benzene Wt% | 0.4391 |

| Type of Control Device | |
|---|---|
| Are tank vapors (A) uncontrolled; (B) controlled by a flare, vapor combustor, thermal oxidizer, or vapor recovery unit (VRU); or (C) controlled by another type of control device? | (A) uncontrolled |
| VOC Control Efficiency | |
| $H_2S$ Control Efficiency | |

| |
|---|
| VOC Type: (pick from list) |
| Natural Gas VOC |

| |
|---|
| Emission Type: (pick from list) |
| Low Pressure Periodic |

| Emissions before control and before wt% reduction | | |
|---|---|---|
| Type of Losses | Max. hourly mass lb/hr | Avg. Annual mass tpy |
| Thermal / Passive Expansion | 38.78 | 0.034 |
| | | |
| **Planned MSS Emissions** | | |
| **Air Contaminant** | **Max. hourly emissions lb/hr** | **Avg.Annual emissions tpy** |
| **Total VOC** | **38.16** | **0.034** |
| **Benzene** | **16.75** | **1.38E-04** |
| **Toluene** | **7.38E-02** | **5.58E-05** |
| **Ethylbenzene** | **0.0033** | **2.35E-06** |
| **Xylene** | **0.0098** | **6.75E-06** |
| **Hexane** | **3.17** | **0.0027** |
| **2,2,4-Trimethylpentane** | **0.00E+00** | **0.00E+00** |
| **Total $H_2S$** | **0.00E+00** | **0.00E+00** |

TARGA

*Targa Midstream Services LLC - Roadrunner Gas Processing Plant*

**Condensate Truck Loading**

**Equation[1]:**

$$L_L = \frac{12.46 * SPM}{T}$$

**Variables[1]:**

$L_L$ - Loading Loss (lbs/1000 gal loaded)
S - Saturation Factor (From Table 5.2-1 of AP-42, Section 5.2)
P - True Vapor Pressure of Loaded Liquid (psia)
M - Molecular Weight of Vapor (lb/lb mol)
T- Temperature of Bulk Liquid ( °R = [°F + 460] )

| | | | | | | | | | | | | | | | | LOAD-1 | | | |
|---|---|---|---|---|---|---|---|---|---|---|---|---|---|---|---|---|---|---|---|
| **Unit** | **Material Loaded [2]** | **Loading Method** | **S** | **$P_{max}$[3] (psia)** | **M [3] (lb/lbmol)** | **$T_{max}$[4] (°R)** | **$L_L$ (lbs/1000 gal)** | **Hourly Throughput [5] (gal/hr)** | **Capture Efficiency (%)** | **VOC Wt %** | **HAP Wt %** | **$H_2S$ Wt %** | **VOC Vapor Loading Losses (lb/hr)** | **HAP Vapor Loading Losses (lb/hr)** | **$H_2S$ Vapor Loading Losses (lb/hr)** | **Uncaptured Hourly VOC Emissions [7] (lb/hr)** | **Uncaptured Hourly HAP Emissions [3,7] (lb/hr)** | **Uncaptured Hourly $H_2S$ Emissions [3,7] (lb/hr)** | **DRE (%)** |
| LOAD | Condensate | Submerged | 1.0 | 14.70 | 52.44 | 555 | 17.31 | 15,120 | 95.0% | 98.41% | 8.83% | 0.01% | 257.50 | 23.12 | 0.030 | 12.88 | 1.16 | 1.509E-03 | 95% |
| | | | | | | | | | | **TOTAL** | | | **257.50** | **23.12** | **0.030** | **12.88** | **1.16** | **1.509E-03** | |

| | | | | | | | | | | | | | | | | LOAD-1 | | | |
|---|---|---|---|---|---|---|---|---|---|---|---|---|---|---|---|---|---|---|---|
| **Unit** | **Material Loaded [2]** | **Loading Method** | **S** | **$P_{avg}$[3] (psia)** | **M [3] (lb/lbmol)** | **$T_{avg}$[4] (°R)** | **$L_L$ (lbs/1000 gal)** | **Annual Throughput (gal/yr) [6]** | **Capture Efficiency (%)** | **VOC Wt %** | **HAP Wt %** | **$H_2S$ Wt %** | **VOC Vapor Loading Losses (tpy)** | **HAP Vapor Loading Losses (tpy)** | **$H_2S$ Vapor Loading Losses (tpy)** | **Uncaptured Annual VOC Emissions [7] (tpy)** | **Uncaptured Annual HAP Emissions [3,7] (tpy)** | **Uncaptured Annual $H_2S$ Emissions [3,7] (tpy)** | **DRE (%)** |
| LOAD | Condensate | Submerged | 1.0 | 14.70 | 52.44 | 523 | 18.36 | 122,640,000 | 95.0% | 96.68% | 8.14% | 0.01% | 1,088.27 | 91.63 | 0.151 | 54.41 | 4.581 | 7.57E-05 | 95% |
| | | | | | | | | | | **TOTAL** | | | **1,088.27** | **91.63** | **0.151** | **54.41** | **4.581** | **7.57E-05** | |

[1] Loading loss equation and variables are from AP-42, Section 5.2, Transportation and Marketing of Petroleum Liquids.
[2] Material loaded is 100% condensate.
[3] Vapor pressure, molecular weight, HAP content, and $H_2S$ content is obtained from ProMax run.
[4] Maximum temperature is 95° F and the average temperature is 63.5° F.
[5] The maximum hourly throughput is based on the capability of the tank truck to load liquids in one hour.
[6] Annual throughput for each loading spot represents site-wide throughput; therefore, total annual emissions is the maximum emissions of each loading spot.
[7] Controlled loading emissions are based on normal operations which account for a capture efficiency of 95% for vapor balanced loading , and a DRE of 95% at the flare. Captured vapors are balanced to the tanks which are controlled by the flare and are thus included in the flare emission totals.

Emission Unit: COMB-1

**Emission Factors**

Emission Factors from AP-42 Table 1.4-1 and 1.4-2 (lb/MMscf) and TNRCC RG-109

| | | | |
|---|---|---|---|
| NOx | 100 | 0.138 | lb/MMBtu |
| CO | 84 | 0.276 | lb/MMBtu |
| PM (Total) | 7.6 | 0.0075 | lb/MMBtu |

Emission Factors from AP-42 Table 1.4-2 (lb/MMscf)

| | | | |
|---|---|---|---|
| $SO_2$ | 0.6 | | |
| VOC | 5.5 | 0.0054 | lb/MMBtu |

| **Stream Sent to Flare/Vapor Combustor Name (Enter Names of Each Stream Here)** | **BD MSS** | **Tank Working/Breathing** | **Loading Vapor Balance to Tanks** | **-** |
|---|---|---|---|---|
| **Maximum Expected Hourly Volumtric Flow Rate of Stream (scf/hr)** | 50000 | 838.99 | 418.45 | **51257.43951** |
| **Amount of Time Stream Fired (hrs/yr)** | 40 | 8760 | 8111.11 | **-** |
| **Maximum Expected Annual Volumtric Flow Rate of Stream (scf/yr)** | 2,000,000.00 | 7,349,572.28 | 3,394,072.08 | **12743644.36** |
| **Heat Value of Stream - from program results or gas analysis (Btu/scf)** | 1,020.00 | 3,970.23 | 3,970.23 | **-** |
| **propane weight percent of total stream (%) *OPTIONAL*** | | | | **-** |
| **VOC weight percent of total stream (%) *OPTIONAL*** | | | | **-** |

| **Hourly (lb/hr)** | | | | |
|---|---|---|---|---|
| **Stream Sent to Flare/Vapor Combustor Name** | **BD MSS** | **Tank Working/Breathing** | **Loading Vapor Balance to Tanks** | **-** |
| VOC | 590.9874909 | 160.61 | 244.63 | **996.22** |
| HAPS | 32.16 | 14.43 | 21.96 | **68.54** |
| $H_2S$ | 0.023 | 0.02 | 0.03 | **0.07** |
| **Annual (tpy)** | | | | |
| VOC | 11.81974982 | 84.35 | 1033.86 | **1130.02** |
| HAPS | 0.643127351 | 7.10 | 87.05 | **94.79** |
| $H_2S$ | 0.00046 | 0.01 | 0.00 | **0.01** |

**Controlled Emissions**

| Hourly (lb/hr) | | | | |
|---|---|---|---|---|
| **Stream Sent to Flare/Vapor Combustor Name** | **BD MSS** | **Tank Working/Breathing** | **Loading Vapor Balance to Tanks** | **-** |
| NOx | 7.038 | 0.460 | 0.229 | **7.73** |
| CO | 14.051 | 0.918 | 0.458 | **15.43** |
| PM2.5 | 0.380 | 0.025 | 0.012 | **0.42** |
| PM10 | 0.380 | 0.025 | 0.012 | **0.42** |
| H2S | 1.16E-03 | 9.42E-04 | 1.43E-03 | **3.53E-03** |
| SO2 | 0.071 | 3.42E-02 | 5.15E-02 | **0.16** |
| Natural Gas VOC | 29.549 | 8.030 | 0.009 | **37.59** |
| Total VOC | 29.549 | 8.030 | 0.009 | **37.59** |
| Total HAPs | 1.608 | 0.721 | 1.098 | **3.43** |

| Annual (tpy) | | | | |
|---|---|---|---|---|
| **Stream Sent to Flare/Vapor Combustor Name** | **BD MSS** | **Tank Working/Breathing** | **Loading Vapor Balance to Tanks** | **-** |
| NOx | 0.141 | 2.013 | 0.930 | **3.08** |
| CO | 0.281 | 4.019 | 1.856 | **6.16** |
| PM2.5 | 0.008 | 0.109 | 0.050 | **0.17** |
| PM10 | 0.008 | 0.109 | 0.050 | **0.17** |
| H2S | 2.31E-05 | 5.87E-04 | 1.02E-06 | **6.11E-04** |
| SO2 | 6.00E-04 | 2.22E-03 | 1.02E-03 | **3.83E-03** |
| Natural Gas VOC | 0.006 | 4.217 | 0.036 | **4.26** |
| Total VOC | 0.006 | 4.217 | 0.036 | **4.26** |
| Total HAPs | 0.032 | 0.355 | 4.352 | **4.74** |

| Flare/Vapor Combustor Total Emissions | | |
|---|---|---|
| | Hourly Emissions (lb/hr) | Annual Emissions (tpy) |
| Natural Gas VOC | 37.59 | 4.26 |
| Total HAPs | 3.43 | 4.74 |
| NOx | 7.73 | 3.08 |
| CO | 15.43 | 6.16 |
| PM2.5 | 0.42 | 0.17 |
| PM10 | 0.42 | 0.17 |

## Haul Road Inputs

### *Site-Wide*

| Description | Value | Unit |
|---|---|---|
| Annual Operating Hours: | 8,760 | hr |
| Daily Operating Hours: | 24 | hr |

### *Unpaved Haul Road*

| Parameter | Value | Unit |
|---|---|---|
| Empty Vehicle Weight[1] | 16 | ton |
| Load Size [2] | 21.2 | ton |
| Loaded Vehicle Weight[3] | 37.2 | ton |
| Mean Vehicle Weight[4] | 26.6 | ton |
| Vehicles Per Day [5] | 12 | VPD |
| Vehicles Per Year | 4380 | VPY |
| Segment Length | 0.06 | mile |
| Trips per Segment | 2 | - |
| Effective Segment Length[6] | 0.12 | mile |
| Trips per Hour[7] | 1.00 | - |
| Wet Days[8] | 70 | day |
| Surface Silt Content[9] | 4.8 | % |
| Control Efficiency | 0 | % |

[1] Empty vehicle weight includes driver and occupants and full fuel load.

[2] Include cargo, transported materials, etc. (5.6 lb/gal RVP10 *7560 gal truck/ 2000lb/ton)

[3] Loaded vehicle weight = Empty + Load Size

[4] Mean Vehicle weight = (Loaded Weight + Empty Weight) / 2

[5] Vehicles per day = (Turnovers/year) / (365 days/year)

[6] Effective segment length = trips per segment * segment length

[7] Trips per hour = Vehicles per day * Segments per trip ÷ Hours of Operation per Day

[8] Wet days is the NM default allowed by NMED without additional justification

[9] Surface silt content based on AP-42 Section 13.2.2.2, Table 13.2.2-1

***Unpaved Road Emission Factors***

| Route | Calculation Parameters [1] | | | | | | | | | | | | Hourly Emission Factors | | | Annual Emission Factors | | |
|---|---|---|---|---|---|---|---|---|---|---|---|---|---|---|---|---|---|---|
| | s | W | P | k | | | a | | | b | | | E [2] | | | $E_{ext}$ [5] | | |
| | Silt Content [1] | Mean Vehicle Weight | Wet Days | $PM_{30}$ | $PM_{10}$ | $PM_{2.5}$ | $PM_{30}$ | $PM_{10}$ | $PM_{2.5}$ | $PM_{30}$ | $PM_{10}$ | $PM_{2.5}$ | $PM_{30}$ [3] | $PM_{10}$ | $PM_{2.5}$ | $PM_{30}$ | $PM_{10}$ | $PM_{2.5}$ |
| | % | tons | day | lb/VMT | lb/VMT | lb/VMT | | | | | | | lb/VMT | lb/VMT | lb/VMT | lb/VMT | lb/VMT | lb/VMT |
| Condensate Trucks | 4.8 | 26.6 | 70 | 4.9 | 1.5 | 0.15 | 0.70 | 0.90 | 0.90 | 0.45 | 0.45 | 0.45 | 6.9 | 1.8 | 0.18 | 5.6 | 1.4 | 0.14 |

[1] Constants are from AP-42 Table 13.2.2-2 in Section 13.2.2.2, and emission factors are calculated using equation 1a.

***Unpaved Road Emissions***

| Route | Calculation Inputs | | | | | | Uncontrolled Emissions | | | | | | Controlled Emissions [6] | | | | | |
|---|---|---|---|---|---|---|---|---|---|---|---|---|---|---|---|---|---|---|
| | Annual Operation | Segment Length | Trips per Segment | Number of Trucks per Year | Effective Segment Length | Average VMT/yr [4] | $PM_{30}$ | | $PM_{10}$ | | $PM_{2.5}$ | | $PM_{30}$ | | $PM_{10}$ | | $PM_{2.5}$ | |
| | hr | mi | | trucks/yr | mi | mi/yr | lb/hr | tpy | lb/hr | tpy | lb/hr | tpy | lb/hr | tpy | lb/hr | tpy | lb/hr | tpy |
| Condensate Trucks | 8,760 | 0.06 | 2 | 4380 | 0.12 | 526 | 0.41 | 1.5 | 0.11 | 0.37 | 0.011 | 0.037 | 0.41 | 1.5 | 0.11 | 0.37 | 0.011 | 0.037 |
| | | | | | | ***Totals*** | ***0.41*** | ***1.5*** | ***0.11*** | ***0.37*** | ***0.011*** | ***0.037*** | ***0.41*** | ***1.5*** | ***0.11*** | ***0.37*** | ***0.011*** | ***0.037*** |

[1] Surface silt = % of 75 micron diameter and smaller particles

[2] E = k x (s/12)^a x (W/3)^b (AP-42 page 13.2.2-4 Equation 1a, November 2006)

E= Size Specific Emission Factor (lb/VMT)

s = surface material silt content (%)

k, a, b = constants from AP-42 Table 13.2.2-2

W = Weighted Mean Vehicle Weight from Haul Road Inputs (tons)

[3] $PM_{30}$ emission factor in equation is assumed as a surrogate for TSP emissions

[4] VMT/yr = Vehicle Miles Travelled per year= Trips per year * Segment Length

[5] Wet Day Emission Factor = E * (365 - Wet Days)/365. Wet days value is the NM default allowed by NMED without additional justification.

[6] Controlled Emissions = Uncontrolled Emissions * (1 - Control Factor/100%)

Control Efficiency = 0%

| | |
|---|---|
| **Emission Unit** | MSSM |
| **Identifier** | MSS Pigging |

| | |
|---|---|
| **Describe this MSS event in detail, include specifically what is being done and how it is being done.** | Emissions from routine pigging activities. |

| | |
|---|---|
| **Actual Volume of the Vented Unit (scf - standard cubic feet)** | 3,850.00 |
| **Actual Volume of the Vented Unit (acf - actual cubic feet)** | 62.43 |
| **Pressure of Gas Inside the Unit Before Venting (psig)** | 900 |
| **Atmospheric Pressure (psia)** | 14.7 |
| **Pressure of Gas Inside the Unit Before Venting (psia)** | 914.7 |
| **Temperature of Gas Inside the Unit Before Venting (°F)** | 65.00 |
| **Temperature of Gas Inside the Unit Before Venting (°R)** | 524.67 |
| **Duration of Each Event (hours/event)** | 0.17 |
| **Frequency of Events (events/year)** | 175 |
| **Venting Gas Molecular Weight (lb/lb-mol)** | 21.65 |
| **VOC wt %** | 21.42 |
| **benzene wt%** | 0.082 |
| **$H_2S$ wt%** | 0.001 |
| **HAPs wt %** | 1.166 |
| **CO2 wt%** | 4.879 |
| **CH4 wt%** | 56.628 |
| **Are planned MSS vapors (A) uncontrolled; (B) controlled by a flare, vapor combustor, thermal oxidizer, or vapor recovery unit (VRU); or (C) controlled by another type of control device?** | (A) uncontrolled |
| **VOC Control Efficiency (%)** | 0 |
| **$H_2S$ Control Efficiency (%)** | 0 |

Ideal Gas Constant, [(ft3*psia)/(R*lb-mol)]

10.73159

Gas Molecular Weight and Weight Percents From Inlet Gas Stream from Amine ProMax

| | |
|---|---|
| Molecular Weight | 21.65 |
| VOC wt % | 21.42 |
| Benzene wt % | 0.082 |
| H2S wt % | 0.001 |
| HAPs wt% | 1.1656 |
| CO2 wt% | 4.8792 |
| CH4 wt% | 56.6276 |

**Vapors Captured by Control Device**

**You need to input these values into the appropriate control device emission calculation tab.**

| | **Hourly Emissions (lb/hr)** | **Annual Emissions (tpy)** |
|---|---|---|
| **VOC Results:** | 0.00 | 0.0000 |
| **Benzene Results:** | 0.00 | 0.0000 |
| **$H_2S$ Results:** | 0.00 | 0.0000 |
| **HAPs Results:** | 0.00 | 0.0000 |
| **CO2 Results:** | 0.00 | 0.0000 |
| **CH4 Results:** | 0.00 | 0.0000 |

**Planned MSS Emissions**

| | **Hourly Emissions (lb/hr)** | **Annual Emissions (tpy)** |
|---|---|---|
| **VOC Results:** | **276.65** | **4.12** |
| **Benzene Results:** | **1.06** | **0.02** |
| **$H_2S$ Results:** | **0.01** | **<0.01** |
| **HAPs Results:** | 15.05 | 0.2239 |
| **CO2 Results:** | 63.01 | 0.9373 |
| **CH4 Results:** | 731.29 | 10.8779 |

| |
|---|
| **VOC Type:** (pick from list) |
| Natural Gas VOC |

| |
|---|
| **Emission Type:** (pick from list) |
| High Pressure Periodic |

*Targa Midstream Services LLC - Roadrunner Gas Processing Plant*

# Pigging Emissions

**Basis of Calculation:**
Emissions from pigging operations are calculated based on a mass balance as follows:

Maximum Uncontrolled Hourly Emissions for each Unit (lb/hr) = [Volume of gas in pipe (scf/event)] x [MW of stream (lb/lb-mol)] x [wt % VOC or speciated constituent] * [events per hour (event/hr) / [379.5 (scf/lb-mol)]

Maximum Uncontrolled Annual Emissions for each Unit (tpy) = [Volume of gas in pipe (scf/event)] x [MW of stream (lb/lb-mol)] x [wt % VOC or speciated constituent] x [frequency of events (events/yr)] / [379.5 (scf/lb-mol)] / [2,000 (lb/ton)]

For sites with multiple units, the total annual emissions are calculated by summing emissions for all units. It is assumed only one unit can be pigged/purged in one hour; therefore, the maximum volume of the units is used for

**Pigging and Purging Emissions**

| | | |
|---|---|---|
| 12" x 15' Launcher - Volume Vented = | 11.78 | scf/event |
| Unit #2 - Volume Vented = | 0 | scf/event |
| Unit #3 - Volume Vented = | 0 | scf/event |
| Maximum Number of Hourly Pigging/Purging Events | 1 | events/hr |
| Unit #1 - Annual Number of Events = | 6 | events/yr |
| Unit #2 - Annual Number of Events = | 0 | events/yr |
| Unit #3 - Annual Number of Events = | 0 | events/yr |
| Pipelines Purged Simultaneously = | 1 | lines |
| Molecular Weight of Stream = | 42 | lb/lb-mol |
| Control Type = | None | |

| Compound | Composition (wt %) | Maximum Uncontrolled Hourly Emissions (lb/hr) | Maximum Uncontrolled Annual Emissions (tpy) |
|---|---|---|---|
| VOC | 100.00 | 1.29 | <0.01 |
| HAP | 10.00 | 0.13 | <0.01 |
| **Total VOC** | **100.00** | **1.29** | **<0.01** |
| **$H_2S$** | **--** | **--** | **--** |
| **Total HAP** | **10.00** | **0.13** | **<0.01** |

[1] This is a representative estimate of the amount of gas vented per blowdown event.

## VENTING EMISSION CALCULATION (for blowdowns, starter vents, gas operated controllers, etc):

| | | |
|---|---|---|
| **Emission Unit** | MSSB | |
| **Venting Volume per Event (SCF/event):** | 50000 | (standard cubic feet) |
| **Number of events per hour:** | 1 | |
| **Number of events per year:** | 40 | |
| **Venting Gas Molecular Weight** | 20.94 | |
| **VOC wt %** | 21.42 | |
| **HAPs wt%** | 1.17 | |
| **$H_2S$ wt%** | 0.0008 | |
| **VOC & HAP Control Efficiency (%)** | 95.00 | |
| **$H_2S$ Control Efficiency (%)** | 98.00 | |

Constant:

379.48 scf/lb-mol

Gas Wt % From Inlet Stream from Amine Pror

| | |
|---|---|
| VOC wt % | 21.42 |
| HAPs wt% | 1.17 |
| H2S wt % | 0.0008 |
| CO2 wt% | 4.8792 |
| CH4 wt% | 56.6276 |

| | **lb/hr** | **tpy** |
|---|---|---|
| **Uncontrolled VOC Emissions:** | 591.0 | 11.8197 |
| **Uncontrolled HAPs Emissions:** | 32.1564 | 0.6431 |
| **Uncontrolled $H_2S$ Emissions:** | 0.0231 | 0.0005 |
| | | |
| **VOC Results:** | 29.5 | 0.5910 |
| **HAPs Results:** | 1.6078 | 0.0322 |
| **$H_2S$ Results:** | 0.0005 | 0.0000 |

# Default VOC emissions for Miscellaneous MSS activities

| | |
|---|---|
| Company Name | Targa Midstream |
| Site Name | Roadrunner Gas Processing Plant |

| | |
|---|---|
| Default VOC emissions (tpy) associated with miscellaneous MSS activities | **0.250** |
| Add default VOC emissions from miscellaneous MSS activities to the emissions summary | Yes |

| # | Activity | Description / comments | Default parameters | | Equation used | | Input parameters | | Annual emissions (tpy) |
|---|---|---|---|---|---|---|---|---|---|
| MSSM-Glycol | ***(b)(2) Glycol dehydration unit*** Emissions associated with replacement of glycol solution used in dehydration unit. There are two vessels in a dehydration unit: contactor and regenerator. | -Calculations based on physical properties of mono ethylene glycol (MEG)(d) because of its low molecular weight and high vapor pressure which gives the most conservative emissions estimate. -Typically the glycol solution used in dehydration unit is not entirely replaced but it is conservatively assumed that the glycol solution is drained once per year for vessel maintenance. -Per field experience, 4000 gal of glycol solution is used in a large dehydration unit. The replacement of glycol solution used in the dehydration unit is an exempt activity pursuant 20.2.72.202.B(2). The vapor pressure of the glycol solution is less than 0.2 psi. | Temperature (°F) | 68 | Loading loss $L_L$ (lb/1000 gal) | 0.0015 | Number of Dehy units | 4 | 0.000043 |
| | | | Vapor pressure (psia) | 0.001 | | | | | |
| | | | Saturation factor | 1 | Loading loss per activity (lb/activity) | 0.0059 | | | |
| | | | Molecular weight (lb/lbmol) | 62.07 | | | | | |
| | | | Glycol solution (gal/activity) | 4000 | | | | | |
| | | | Temperature (°F) | 68 | Clingage loss (lb/activity) | 0.0155 | | | |
| | | | Vapor pressure (psia) | 0.001 | | | | | |
| | | | Molecular weight (lb/lb-mole) | 62.07 | | | | | |
| | | | $V_V$ Vessel volume ($ft^3$) (5 ft radii * 30 ft height) | 2355 | | | | | |
| | | | Ideal gas constant (psia-ft3/lb-mol-°R) | 10.73 | | | | | |
| | | | Number of activities per year | 1 | Total (lbs/yr/unit) | 0.0213 | | | |
| MSSM-Amine | ***(b)(2) Amine unit*** Emissions associated with replacement of solution used in the amine unit. There are two vessels in an amine unit: Contactor and regenerator. | -Calculations based on physical properties of mono ethanol amine (MEA)(e) because of its low molecular weight and high vapor pressure which gives the most conservative emissions estimate. -Typically the solution used in amine unit is not entirely replaced but it is conservatively assumed that the amine solution is drained once per year for vessel maintenance. -Per field experience, 4000 gal of solution is used in a large amine unit. The replacement of solution used in the amine unit is an exempt activity pursuant 20.2.72.202.B(2). The vapor pressure of the amine solution is less than 0.2 psi. | Temperature (°F) | 68 | Loading loss $L_L$ (lb/1000 gal) | 0.0058 | Number of Amine units | 2 | 0.000084 |
| | | | Vapor pressure (psia) | 0.004 | | | | | |
| | | | Saturation factor | 1 | Loading loss per activity (lb/activity) | 0.0231 | | | |
| | | | Molecular weight (lb/lbmol) | 61.08 | | | | | |
| | | | Amine solution (gal/activity) | 4000 | | | | | |
| | | | Temperature (°F) | 68 | Clingage loss (lb/activity) | 0.0609 | | | |
| | | | Vapor pressure (psia) | 0.004 | | | | | |
| | | | Molecular weight (lb/lb-mole) | 61.08 | | | | | |
| | | | $V_V$ Vessel volume ($ft^3$) (5 ft radii * 30 ft height) | 2355 | | | | | |
| | | | Ideal gas constant (psia-ft3/lb-mol-°R) | 10.73 | | | | | |
| | | | Number of activities per year | 1 | Total (lbs/yr/unit) | 0.0840 | | | |
| MSSM-Aerosol | ***(b)(2) Aerosol Lubricants*** | The use of aerosol lubricants for the maintenance of equipment or control devices is exempt pursuant 20.2.72.202.A(2). | | | | | | | |
| MSSM-Piping | ***(b)(3) Piping Components*** | The repositioning or relocating of piping components within the plant that does not reposition or relocate any source of air emission or the emission points from any such source are exempt pursuant 20.2.72.202.A(15). The replacement and maintenance of piping components is exempt pursuant 20.2.72.202.A(2). | | | | | | | |
| MSSM-Cal | ***(b)(2) Calibration*** | Use of calibration gases is exempt under 20.2.72.202.A(10) NMAC. | | | | | | | |
| MSSM-Misc | ***(b)(6)*** MSSM-Misc - Safety factor to account for MSS activities with the same character and quantity of emissions as those listed in paragraphs (b) (1) - (5) of §106.359. These activities are exempt pursuant 20.2.72.202.A(2). | | | | | | | 1 | 0.028 |

| | | TPY | lbs/hr |
|---|---|---|---|
| | **Total VOC emissions** | **2.81E-02** | **0.006** |

| **VOC Type: (pick from list)** |
|---|
| Crude Oil or Condensate VOC |

| **Emission Type: (pick from list)** |
|---|
| Steady State (continuous) |

**GHG Emissions from Natural Gas Combustion**

| Emission Source | | Heat Rate | $CO_2$ EF | $CO_2$ Emissions | | $CH_4$ EF | $CH_4$ Emissions | | $N_2O$ EF | $N_2O$ Emissions | |
|---|---|---|---|---|---|---|---|---|---|---|---|
| | Source Description | mmbtu/hr | kg/mmbtu | metric TPY | short tpy | kg/mmbtu | metric TPY | short tpy | kg/mmbtu | metric TPY | short tpy |
| EP-2 | Trim Reboiler | 26.5 | 53.06 | 12317.35 | 13577.41 | 0.001 | 0.232 | 0.256 | 0.0001 | 0.023 | 0.026 |
| 2-EP-2, 3-EP-2 | Trim Reboiler | 26.5 | 53.06 | 12317.35 | 13577.41 | 0.001 | 0.232 | 0.256 | 0.0001 | 0.023 | 0.026 |
| EP-3A | Amine Reboiler | 70.28 | 53.06 | 32666.54 | 36008.32 | 0.001 | 0.616 | 0.679 | 0.0001 | 0.062 | 0.068 |
| EP-3B | Amine Reboiler | 70.28 | 53.06 | 32666.54 | 36008.32 | 0.001 | 0.616 | 0.679 | 0.0001 | 0.062 | 0.068 |
| EP-4 | Glycol Reboiler | 3.9 | 53.06 | 1812.74 | 1998.19 | 0.001 | 0.034 | 0.038 | 0.0001 | 0.003 | 0.004 |
| 2-EP-4, 3-EP-4 | Glycol Reboiler | 3.9 | 53.06 | 1812.74 | 1998.19 | 0.001 | 0.034 | 0.038 | 0.0001 | 0.003 | 0.004 |
| EP-5 | Regen Reboiler | 9.5 | 53.06 | 4415.65 | 4867.37 | 0.001 | 0.083 | 0.092 | 0.0001 | 0.008 | 0.009 |
| 2-EP-5, 3-EP-5 | Regen Reboiler | 9.5 | 53.06 | 4415.65 | 4867.37 | 0.001 | 0.083 | 0.092 | 0.0001 | 0.008 | 0.009 |
| EP-6, 2-EP-6 | Stabilizer Heater | 23.4 | 53.06 | 10876.45 | 11989.11 | 0.001 | 0.205 | 0.226 | 0.0001 | 0.020 | 0.023 |
| EP-9 | Thermal Oxidizer | 75.00 | 53.06 | 34860.42 | 38426.64 | 0.001 | 0.657 | 0.724 | 0.0001 | 0.066 | 0.072 |
| EP-1 | Flare Pilot | 0.19 | 53.06 | 88.31 | 97.35 | 0.001 | 0.002 | 0.002 | 0.0001 | 0.000 | 0.000 |
| 2/3-EP1 | Flare Pilot | 0.38 | 53.06 | 176.63 | 194.69 | 0.001 | 0.003 | 0.004 | 0.0001 | 0.000 | 0.000 |
| 2-HT-1 | Hot Oil Heater | 84.77 | 53.06 | 39401.57 | 43432.35 | 0.001 | 0.743 | 0.819 | 0.0001 | 0.074 | 0.082 |

Emission Factors (EF) from Tables C-1 and C-2 to 40 CFR 98 Subpart C

## Emergency Flare GHG Emisssions

**§98.233(n) Flare stack natural gas GHG emissions.**

**Step 1. Calculate contribution of un-combusted $CH_4$ emissions**

$E_{a,CH4}$ (un-combusted) = $V_a * (1- \eta) * X_{CH4}$ *(Equation W-39B)*

where:

$E_{a,CH4}$ = contribution of annual un-combusted $CH_4$ emissions from regenerator in cubic feet under actual conditions.

$V_a$ = volume of gas sent to combustion unit during the year (cf)

$\eta$ = Fraction of gas combusted by a burning flare (or regenerator), default value from Subpart W = 0.98

For gas sent to an unlit flare, $\eta$ is zero.

$X_{CH4}$ = Mole fraction of $CH_4$ in gas to the flare = 0.7641 (Client gas analysis)

**Step 2. Calculate contribution of un-combusted $CO_2$ emissions**

$E_{a,CO2} = V_a * X_{CO2}$ *(Equation W-20)*

where:

$E_{a,CO2}$ = contribution of annual un-combusted $CO_2$ emissions from regenerator in cubic feet under actual conditions.

$V_a$ = volume of gas sent to combustion unit during the year (cf)

$X_{CO2}$ = Mole fraction of $CO_2$ in gas to the flare = 0.024

**Step 3. Calculate contribution of combusted $CO_2$ emissions**

$E_{a,CO2}$ (combusted) = $\sum (\eta * V_a * Y_j * R_j)$ *(Equation W-21)*

where:

$\eta$ = Fraction of gas combusted by a burning flare (or regenerator) = 0.98

For gas sent to an unlit flare, $\eta$ is zero.

$V_a$ = volume of gas sent to combustion unit during the year (cf)

$Y_j$ = mole fraction of gas hydrocarbon constituents j:

| | | |
|---|---|---|
| Constituent j, Methane = | 0.7641 | (Client gas analysis) |
| Constituent j, Ethane = | 0.1118 | |
| Constituent j, Propane = | 0.0530 | |
| Constituent j, Butane = | 0.0233 | |
| Constituent j, Pentanes Plus = | 0.9348 | |

$R_j$ = number of carbon atoms in the gas hydrocarbon constituent j:

| | |
|---|---|
| Constituent j, Methane = | 1 |
| Constituent j, Ethane = | 2 |
| Constituent j, Propane = | 3 |
| Constituent j, Butane = | 4 |
| Constituent j, Pentanes Plus = | 5 |

**Step 4. Calculate GHG volumetric emissions at standard conditions (scf).**

$$E_{s,n} = \frac{E_{a,n} * (459.67 + T_s) * P_a}{(459.67 + T_a) * P_s}$$ *(Equation W-33)*

where:

$E_{s,n}$ = GHG i volumetric emissions at standard temperature and pressure (STP) in cubic feet

$E_{a,n}$ = GHG i volumetric emissions at actual conditions (cf)

$T_s$ = Temperature at standard conditions (F) = 60 F

$T_a$ = Temperature at actual conditions (F) = 76 F (Based on Annual Avg Max Temperature for Hobbs, NM from Western Regional Climate Center)

$P_s$ = Absolute pressure at standard conditions (psia) = 14.7 psia

$P_a$ = Absolute pressure at actual conditions (psia) = 12.73 psia (Assumption)

Constant = 459.67 (temperature conversion from F to R)

**Step 5. Calculate annual $CH_4$ and $CO_2$ mass emissions (ton).**

$Mass_{s,i} = E_{s,i} * \rho_i * 0.001 * 1.1023$ *(Equation W-36)*

where:

$Mass_{s,i}$ = GHG i ($CO_2$, $CH_4$, or $N_2O$) mass emissions at standard conditions in tons (tpy)

$E_{s,i}$ = GHG i ($CO_2$, $CH_4$, or $N_2O$) volumetric emissions at standard conditions (cf)

$\rho_i$ = Density of GHG i. Use:

| | | |
|---|---|---|
| $CH_4$: | 0.0192 | $kg/ft^3$ (at 60F and 14.7 psia) |
| $CO_2$: | 0.0526 | $kg/ft^3$ (at 60F and 14.7 psia) |

$1 \times 10^{-3}$ = conversion factor from kg to metric tons.

1.1203 = conversion factor from metric tons to short tons.

**Step 6. Calculate annual $N_2O$ emissions from portable or stationary fuel combustion sources under actual conditions (cf) using Equation W-40 .**

$Mass_{N2O}$ = 0.001 * Fuel * HHV * EF*1.1023 *(Equation W-40)*

where:

$Mass_{N2O}$ = annual $N_2O$ emissions from combustion of a particular type of fuel ( tons ).

Fuel = mass or volume of the fuel combusted

HHV = high heat value of the fuel

SSM flaring gas HHV = 0.00107 MMBtu/scf

EF = 1.00E-04 kg $N_2O$/MMBtu

$10^{-3}$ = conversion factor from kg to metric tons.

1.1203 = conversion factor from metric tons to short tons.

**Step 7. Calculate total annual emission from flare by summing Equations W-40, W-19, W-20, and W-21.**

| Gas Sent to Emergency Flare | Gas Sent to Flare (cf/yr) | $CH_4$ Un-Combusted, $E_{a,CH4}$ (cf) | $CO_2$ Un-Combusted, $E_{a,CO2}$ (cf) | $CO_2$ Combusted, $E_{a,CO2}$ (cf) | $CH_4$ Un-Combusted, $E_{a,CH4}$ (scf) | $CO_2$ Un-Combusted, $E_{a,CO2}$ (scf) | $CO_2$ Combusted, $E_{a,CO2}$ (scf) | $CH_4$ Un-Combusted, $E_{a,CH4}$ (tpy) | $CO_2$ Un-Combusted, $E_{a,CO2}$ (tpy) | $CO_2$ Combusted, $E_{a,CO2}$ (tpy) | $N_2O$ Mass Emissions (tpy) | CO2e (tpy) |
|---|---|---|---|---|---|---|---|---|---|---|---|---|
| SSM Flaring (EP-1, 2-EP-1, and 3-EP-1) | 252,964,800 | 3,865,870 | 6,071,093 | 1,465,990,682 | 3,245,978 | 5,097,592 | 1,230,918,909 | 68.70 | 295.56 | 71,369.88 | 0.02984 | 73,392 |
| **Total** | **252,964,800** | **3,865,870** | **6,071,092.8** | **1,465,990,682** | **3,245,978** | **5,097,592.4** | **1,230,918,909** | **68.7** | **295.6** | **71,369.9** | **0.02984** | **73,392** |
| | | | | | | | | GWP | 1 | 25 | 298 | |

**§98.233(n) Flare EP-1 stack amine vent GHG emissions.**

**Step 1. Calculate contribution of un-combusted $CH_4$ emissions**

$E_{a,CH4}$ (un-combusted) = $V_a$ * (1- η)* $X_{CH4}$ *(Equation W-39B)*

where:

$E_{a,CH4}$ = contribution of annual un-combusted $CH_4$ emissions from regenerator in cubic feet under actual conditions.

$V_a$ = volume of gas sent to combustion unit during the year (cf)

η = Fraction of gas combusted by a burning flare (or regenerator), default value from Subpart W = 0.98

For gas sent to an unlit flare, η is zero.

$X_{CH4}$ = Mole fraction of $CH_4$ in gas to the flare = 0.7284 (Promax Run)

**Step 2. Calculate contribution of un-combusted $CO_2$ emissions**

$E_{a,CO2}$ = $V_a$ * $X_{CO2}$ *(Equation W-20)*

where:

$E_{a,CO2}$ = contribution of annual un-combusted $CO_2$ emissions from regenerator in cubic feet under actual conditions.

$V_a$ = volume of gas sent to combustion unit during the year (cf)

$X_{CO2}$ = Mole fraction of $CO_2$ in gas to the flare = 0.013

**Step 3. Calculate contribution of combusted $CO_2$ emissions**

$E_{a,CO2}$ (combusted) = ∑ (η * $V_a$ * $Y_j$ * $R_j$) *(Equation W-21)*

where:

η = Fraction of gas combusted by a burning flare (or regenerator) = 0.98

For gas sent to an unlit flare, η is zero.

$V_a$ = volume of gas sent to combustion unit during the year (cf)

$Y_j$ = mole fraction of gas hydrocarbon constituents j:

| | | |
|---|---|---|
| Constituent j, Methane = | 0.7284 | (Client gas analysis) |
| Constituent j, Ethane = | 0.1427 | |
| Constituent j, Propane = | 0.0483 | |
| Constituent j, Butane = | 0.0185 | |
| Constituent j, Pentanes Plus = | 0.6085 | |

$R_j$ = number of carbon atoms in the gas hydrocarbon constituent j:

| | |
|---|---|
| Constituent j, Methane = | 1 |
| Constituent j, Ethane = | 2 |
| Constituent j, Propane = | 3 |
| Constituent j, Butane = | 4 |
| Constituent j, Pentanes Plus = | 5 |

**Step 4. Calculate GHG volumetric emissions at standard conditions (scf).**

$$E_{s,n} = \frac{E_{a,n} * (459.67 + T_s) * P_a}{(459.67 + T_a) * P_s}$$ *(Equation W-33)*

where:

$E_{s,n}$ = GHG i volumetric emissions at standard temperature and pressure (STP) in cubic feet

$E_{a,n}$ = GHG i volumetric emissions at actual conditions (cf)

$T_s$ = Temperature at standard conditions (F) = 60 F

$T_a$ = Temperature at actual conditions (F) = 76 F (Based on Annual Avg Max Temperature for Hobbs, NM from Western Regional Climate Center)

$P_s$ = Absolute pressure at standard conditions (psia) = 14.7 psia

$P_a$ = Absolute pressure at actual conditions (psia) = 12.73 psia (Assumption)

Constant = 459.67 (temperature conversion from F to R)

**Step 5. Calculate annual $CH_4$ and $CO_2$ mass emissions (ton).**

$Mass_{s,i}$ = $E_{s,i}$ * $\rho_i$ * 0.001 * 1.1023 *(Equation W-36)*

where:

$Mass_{s,i}$ = GHG i ($CO_2$, $CH_4$, or $N_2O$) mass emissions at standard conditions in tons (tpy)

$E_{s,i}$ = GHG i ($CO_2$, $CH_4$, or $N_2O$) volumetric emissions at standard conditions (cf)

$\rho_i$ = Density of GHG i. Use:

| | | |
|---|---|---|
| $CH_4$: | 0.0192 | $kg/ft^3$ (at 60F and 14.7 psia) |
| $CO_2$: | 0.0526 | $kg/ft^3$ (at 60F and 14.7 psia) |

$1 \times 10^{-3}$ = conversion factor from kg to metric tons.

1.1203 = conversion factor from metric tons to short tons.

**Step 6. Calculate annual $N_2O$ emissions from portable or stationary fuel combustion sources under actual conditions (cf) using Equation W-40 .**

$Mass_{N2O}$ = 0.001 * Fuel * HHV * EF*1.1023 *(Equation W-40)*

where:

$Mass_{N2O}$ = annual $N_2O$ emissions from combustion of a particular type of fuel ( tons ).

Fuel = mass or volume of the fuel combusted

HHV = high heat value of the fuel

SSM flaring gas HHV = 0.00108 MMBtu/scf

EF = 1.00E-04 kg $N_2O$/MMBtu

$10^{-3}$ = conversion factor from kg to metric tons.

1.1203 = conversion factor from metric tons to short tons.

**Step 7. Calculate total annual emission from flare by summing Equations W-40, W-19, W-20, and W-21.**

| Gas Sent to Emergency Flare | Gas Sent to Flare (cf/yr) | $CH_4$ Un-Combusted, $E_{a,CH4}$ (cf) | $CO_2$ Un-Combusted, $E_{a,CO2}$ (cf) | $CO_2$ Combusted, $E_{a,CO2}$ (cf) | $CH_4$ Un-Combusted, $E_{a,CH4}$ (scf) | $CO_2$ Un-Combusted, $E_{a,CO2}$ (scf) | $CO_2$ Combusted, $E_{a,CO2}$ (scf) | $CH_4$ Un-Combusted, $E_{a,CH4}$ (tpy) | $CO_2$ Un-Combusted, $E_{a,CO2}$ (tpy) | $CO_2$ Combusted, $E_{a,CO2}$ (tpy) | $N_2O$ Mass Emissions (tpy) | CO2e (tpy) |
|---|---|---|---|---|---|---|---|---|---|---|---|---|
| SSM Flaring (EP-1, 2-EP-1, and 3-EP-1) | 9,879,465 | 143,915 | 125,195 | 41,387,809 | 120,838 | 105,120 | 34,751,269 | 2.56 | 6.09 | 2,014.91 | 0.00118 | 2,085 |
| **Total** | **9,879,465** | **143,915** | **125,195.3** | **41,387,809** | **120,838** | **105,120.2** | **34,751,269** | **2.6** | **6.1** | **2,014.9** | **0.00118** | **2,085** |
| | | | | | | | | GWP | 1 | 25 | 298 | |

## Combuster GHG Emissions

**§98.233(n) Flare stack GHG emissions.**

**Step 1. Calculate contribution of un-combusted $CH_4$ emissions**

$E_{a,CH4}$ (un-combusted) = $V_a * (1- \eta) * X_{CH4}$ *(Equation W-39B)*

where:

$E_{a,CH4}$ = contribution of annual un-combusted $CH_4$ emissions from regenerator in cubic feet under actual conditions.

$V_a$ = volume of gas sent to combustion unit during the year (cf)

$\eta$ = Fraction of gas combusted by a burning flare (or regenerator), default value from Subpart W = 0.98

For gas sent to an unlit flare, $\eta$ is zero.

$X_{CH4}$ = Mole fraction of $CH_4$ in gas to the flare = 0.0041 (Client gas analysis)

**Step 2. Calculate contribution of un-combusted $CO_2$ emissions**

$E_{a,CO2} = V_a * X_{CO2}$ *(Equation W-20)*

where:

$E_{a,CO2}$ = contribution of annual un-combusted $CO_2$ emissions from regenerator in cubic feet under actual conditions.

$V_a$ = volume of gas sent to combustion unit during the year (cf)

$X_{CO2}$ = Mole fraction of $CO_2$ in gas to the flare = 0.000

**Step 3. Calculate contribution of combusted $CO_2$ emissions**

$E_{a,CO2}$ (combusted) = $\sum (\eta * V_a * Y_j * R_j)$ *(Equation W-21)*

where:

$\eta$ = Fraction of gas combusted by a burning flare (or regenerator) = 0.98

For gas sent to an unlit flare, $\eta$ is zero.

$V_a$ = volume of gas sent to combustion unit during the year (cf)

$Y_j$ = mole fraction of gas hydrocarbon constituents j:

| | | |
|---|---|---|
| Constituent j, Methane = | 0.0041 | (Client gas analysis) |
| Constituent j, Ethane = | 0.0011 | |
| Constituent j, Propane = | 0.0027 | |
| Constituent j, Butane = | 0.0574 | |
| Constituent j, Pentanes Plus = | 0.9348 | |

$R_j$ = number of carbon atoms in the gas hydrocarbon constituent j:

| | |
|---|---|
| Constituent j, Methane = | 1 |
| Constituent j, Ethane = | 2 |
| Constituent j, Propane = | 3 |
| Constituent j, Butane = | 4 |
| Constituent j, Pentanes Plus = | 5 |

**Step 4. Calculate GHG volumetric emissions at standard conditions (scf).**

$$E_{s,n} = \frac{E_{a,n} * (459.67 + T_s) * P_a}{(459.67 + T_a) * P_s}$$ *(Equation W-33)*

where:

$E_{s,n}$ = GHG i volumetric emissions at standard temperature and pressure (STP) in cubic feet

$E_{a,n}$ = GHG i volumetric emissions at actual conditions (cf)

$T_s$ = Temperature at standard conditions (F) = 60 F

(Based on Annual Avg Max Temperature for Hobbs, NM from Western Regional Climate Center)

$T_a$ = Temperature at actual conditions (F) = 76 F

$P_s$ = Absolute pressure at standard conditions (psia) = 14.7 psia

$P_a$ = Absolute pressure at actual conditions (psia) = 12.73 psia (Assumption)

Constant = 459.67 (temperature conversion from F to R)

**Step 5. Calculate annual $CH_4$ and $CO_2$ mass emissions (ton).**

$Mass_{s,i} = E_{s,i} * \rho_i * 0.001 * 1.1023$ *(Equation W-36)*

where:

$Mass_{s,i}$ = GHG i ($CO_2$, $CH_4$, or $N_2O$) mass emissions at standard conditions in tons (tpy)
$E_{s,i}$ = GHG i ($CO_2$, $CH_4$, or $N_2O$) volumetric emissions at standard conditions (cf)
$\rho_i$ = Density of GHG i. Use:

| | | |
|---|---|---|
| $CH_4$: | 0.0192 | kg/ft³ (at 60F and 14.7 psia) |
| $CO_2$: | 0.0526 | kg/ft³ (at 60F and 14.7 psia) |

$1 \times 10^{-3}$ = conversion factor from kg to metric tons.
1.1203 = conversion factor from metric tons to short tons.

**Step 6. Calculate annual $N_2O$ emissions from portable or stationary fuel combustion sources under actual conditions (cf) using Equation W-40 .**

$Mass_{N2O}$ = 0.001 * Fuel * HHV * EF*1.1023 *(Equation W-40)*

where:

$Mass_{N2O}$ = annual $N_2O$ emissions from combustion of a particular type of fuel ( tons ).
Fuel = mass or volume of the fuel combusted
HHV = high heat value of the fuel

| | | |
|---|---|---|
| SSM flaring gas HHV = | 0.00107 | MMBtu/scf |
| EF = | 1.00E-04 | kg $N_2O$/MMBtu |

$1 \times 10^{-3}$ = conversion factor from kg to metric tons.
1.1203 = conversion factor from metric tons to short tons.

**Step 7. Calculate total annual emission from flare by summing Equations W-40, W-19, W-20, and W-21.**

| Gas Sent to Combuster | Gas Sent to Combuster (cf/yr) | $CH_4$ Un-Combusted, $E_{a,CH4}$ (cf) | $CO_2$ Un-Combusted, $E_{a,CO2}$ (cf) | $CO_2$ Combusted, $E_{a,CO2}$ (cf) | $CH_4$ Un-Combusted, $E_{a,CH4}$ (scf) | $CO_2$ Un-Combusted, $E_{a,CO2}$ (scf) | $CO_2$ Combusted, $E_{a,CO2}$ (scf) | $CH_4$ Un-Combusted, $E_{a,CH4}$ (tpy) | $CO_2$ Un-Combusted, $E_{a,CO2}$ (tpy) | $CO_2$ Combusted, $E_{a,CO2}$ (tpy) | $N_2O$ Mass Emissions (tpy) | CO2e (tpy) |
|---|---|---|---|---|---|---|---|---|---|---|---|---|
| COMB-1 | 12,743,644 | 1,033 | 0 | 61,417,098 | 867 | 0 | 51,568,859 | 0.02 | 0.00 | 2,990.01 | 0.00150 | 2,991 |
| **Total** | **12,743,644** | **1,033** | **0.0** | **61,417,098** | **867** | **0.0** | **51,568,859** | **0.0** | **0.0** | **2,990.0** | **0.00150** | **2,991** |

| | $CO_2$ | $CH_4$ | $N_2O$ |
|---|---|---|---|
| GWP | 1 | 25 | 298 |

# Section 6.a

## Green House Gas Emissions

(Submitting under 20.2.70, 20.2.72 20.2.74 NMAC)

---

**Title V (20.2.70 NMAC), Minor NSR (20.2.72 NMAC), and PSD (20.2.74 NMAC)** applicants must estimate and report greenhouse gas (GHG) emissions to verify the emission rates reported in the public notice, determine applicability to 40 CFR 60 Subparts, and to evaluate Prevention of Significant Deterioration (PSD) applicability. GHG emissions that are subject to air permit regulations consist of the sum of an aggregate group of these six greenhouse gases: carbon dioxide ($CO_2$), nitrous oxide ($N_2O$), methane ($CH_4$), hydrofluorocarbons (HFCs), perfluorocarbons (PFCs), and sulfur hexafluoride ($SF_6$).

### Calculating GHG Emissions:

**1.** Calculate the ton per year (tpy) GHG mass emissions and GHG $CO_2e$ emissions from your facility.
**2.** GHG mass emissions are the sum of the total annual tons of greenhouse gases without adjusting with the global warming potentials (GWPs). GHG $CO_2e$ emissions are the sum of the mass emissions of each individual GHG multiplied by its GWP found in Table A-1 in 40 CFR 98 Mandatory Greenhouse Gas Reporting.
**3.** Emissions from routine or predictable start up, shut down, and maintenance must be included.
**4.** Report GHG mass and GHG $CO_2e$ emissions in Table 2-P of this application. Emissions are reported in **short** tons per year and represent each emission unit's Potential to Emit (PTE).
**5.** All Title V major sources, PSD major sources, and all power plants, whether major or not, must calculate and report GHG mass and CO2e emissions for each unit in Table 2-P.
**6.** For minor source facilities that are not power plants, are not Title V, and are not PSD there are three options for reporting GHGs in Table 2-P: 1) report GHGs for each individual piece of equipment; 2) report all GHGs from a group of unit types, for example report all combustion source GHGs as a single unit and all venting GHGs as a second separate unit; 3) or check the following ☐ By checking this box, the applicant acknowledges the total CO2e emissions are less than 75,000 tons per year.

**Sources for Calculating GHG Emissions:**

- Manufacturer's Data
- AP-42 Compilation of Air Pollutant Emission Factors at http://www.epa.gov/ttn/chief/ap42/index.html
- EPA's Internet emission factor database WebFIRE at http://cfpub.epa.gov/webfire/
- 40 CFR 98 Mandatory Green House Gas Reporting except that tons should be reported in short tons rather than in metric tons for the purpose of PSD applicability.
- API Compendium of Greenhouse Gas Emissions Methodologies for the Oil and Natural Gas Industry. August 2009 or most recent version.
- Sources listed on EPA's NSR Resources for Estimating GHG Emissions at http://www.epa.gov/nsr/clean-air-act-permitting-greenhouse-gases:

**Global Warming Potentials (GWP):**
Applicants must use the Global Warming Potentials codified in Table A-1 of the most recent version of 40 CFR 98 Mandatory Greenhouse Gas Reporting. The GWP for a particular GHG is the ratio of heat trapped by one unit mass of the GHG to that of one unit mass of $CO_2$ over a specified time period.

**"Greenhouse gas"** for the purpose of air permit regulations is defined as the aggregate group of the following six gases: carbon dioxide, nitrous oxide, methane, hydrofluorocarbons, perfluorocarbons, and sulfur hexafluoride. **(20.2.70.7 NMAC, 20.2.74.7 NMAC).** You may also find GHGs defined in 40 CFR 86.1818-12(a).

**Metric to Short Ton Conversion:**
Short tons for GHGs and other regulated pollutants are the standard unit of measure for PSD and title V permitting programs. 40 CFR 98 Mandatory Greenhouse Reporting requires metric tons.
1 metric ton = 1.10231 short tons (per Table A-2 to Subpart A of Part 98 – Units of Measure Conversions)

# Section 7

## Information Used to Determine Emissions

---

**Information Used to Determine Emissions shall include the following**:

- ☒ If manufacturer data are used, include specifications for emissions units and control equipment, including control efficiencies specifications and sufficient engineering data for verification of control equipment operation, including design drawings, test reports, and design parameters that affect normal operation.
- ☐ If test data are used, include a copy of the complete test report. If the test data are for an emissions unit other than the one being permitted, the emission units must be identical. Test data may not be used if any difference in operating conditions of the unit being permitted and the unit represented in the test report significantly effect emission rates.
- ☒ If the most current copy of AP-42 is used, reference the section and date located at the bottom of the page. Include a copy of the page containing the emissions factors, and clearly mark the factors used in the calculations.
- ☐ If an older version of AP-42 is used, include a complete copy of the section.
- ☒ If an EPA document or other material is referenced, include a complete copy.
- ☒ Fuel specifications sheet.
- ☒ If computer models are used to estimate emissions, include an input summary (if available) and a detailed report, and a disk containing the input file(s) used to run the model. For tank-flashing emissions, include a discussion of the method used to estimate tank-flashing emissions, relative thresholds (i.e., permit or major source (NSPS, PSD or Title V)), accuracy of the model, the input and output from simulation models and software, all calculations, documentation of any assumptions used, descriptions of sampling methods and conditions, copies of any lab sample analysis.

---

**Generator (Units GEN-1 through GEN-12)**

- Final Tier 4 Emissions Standards for Non-Road Engines
- AP-42, 5th Edition, Table 3.4-3 and Table 3.4-1
- 40 CFR 98 Subpart C Table C-1 and Table C-2

**TEG Glycol Dehydrators (EP-7, 2-EP-7, and 3-EP-7)**

- BR&E ProMax

**Amine Units**

- BR&E ProMax
- Inlet gas analysis dated November 19, 2019
    - A more recently dated inlet gas analysis, dated November 18, 2022, is available and is included in this application package for reference. The gas analysis dated November 19, 2019 was used in lieu of the newer analysis as it is more conservative for both VOC and HAPs content.

**Thermal Oxidizer (EP-9)**

- Manufacturer specifications
- 40 CFR 98 Subpart C Table C-1 and Table C-2

**Thermal Oxidizer SSM**

- BR&E ProMax

**Flares (EP-1, 2-EP-1, 3-EP-1)**

- TNRCC RG-109 Emission Factors
- Inlet gas analysis dated November 19, 2019

  - A more recently dated inlet gas analysis, dated November 18, 2022, is available and is included in this application package for reference. The gas analysis dated November 19, 2019 was used in lieu of the newer analysis as it is more conservative for both VOC and HAPs content.
- Flare Header Cold Side analysis dated November 18, 2022
- Fuel gas analysis dated July 27, 2021
- 40 CFR 98 Subpart C Table C-1 and Table C-2
- Manufacturer specifications

**Condensate Tanks (T-1 through T-5)**

- BR&E ProMax
- Condensate analysis dated February 3, 2022

**Produced Water Storage Tank (T-6)**

- BR&E ProMax

**Condensate Loading (LOAD)**

- AP-42 Chapter 5.2, *Transportation and Marketing of Petroleum Liquids*
- BR&E ProMax

**Tank Combustor (COMB-1)**

- TNRCC RG-109 Emission Factors
- BR&E ProMax
- 40 CFR 98 Subpart C Table C-1 and Table C-2

**Fugitives (FUG)**

- Inlet gas analysis dates November 19, 2019
  - A more recently dated inlet gas analysis, dated November 18, 2022, is available and is included in this application package for reference. The gas analysis dated November 19, 2019 was used in lieu of the newer analysis as it is more conservative for both VOC and HAPs content.
- Fuel gas analysis dated July 27, 2021
- Condensate analysis dated February 3, 2022
- Table 2-4 of the EPA Protocol for Equipment Leak Emission Estimates, November 1995

**Haul Roads (HAUL)**

- AP-42 Chapter 13.2.2, *Unpaved Roads*, Table 13.2.2-2

# Certificate of Analysis

Number: 6030-22020089-001A

**Artesia Laboratory**
200 E Main St.
Artesia, NM 88210
Phone 575-746-3481

Tom Cleveland
Lucid Energy Group
3100 McKinnon St. #800
Dallas, TX 75201

Feb. 07, 2022

Station Name: Road Runner Gas Plant Tank Condensate
Station Number: N/A
Station Location: Lucid
Analyzed: 02/07/2022 10:58:32

Sampled By: Michael Mirabal
Sample Of: Liquid Spot
Sample Date: 02/03/2022 01:43
Sample Conditions:
Method: GPA 2186

## Analytical Data

| Components | Mol. % | Wt. % | L.V. % |
|---|---|---|---|
| Nitrogen | 0.074 | 0.023 | 0.020 |
| Methane | 0.002 | NIL | 0.001 |
| Carbon Dioxide | NIL | NIL | NIL |
| Ethane | 0.003 | 0.001 | 0.002 |
| Propane | 0.024 | 0.012 | 0.016 |
| Iso-Butane | 0.086 | 0.056 | 0.069 |
| n-Butane | 1.731 | 1.124 | 1.333 |
| Iso-Pentane | 10.631 | 8.570 | 9.496 |
| n-Pentane | 17.244 | 13.901 | 15.267 |
| i-Hexanes | 15.924 | 15.104 | 15.680 |
| n-Hexane | 12.169 | 11.715 | 12.221 |
| Benzene | 1.126 | 0.983 | 0.771 |
| Cyclohexane | 5.756 | 5.413 | 4.786 |
| i-Heptanes | 13.147 | 13.810 | 13.237 |
| n-Heptane | 4.094 | 4.583 | 4.614 |
| Toluene | 1.328 | 1.368 | 1.088 |
| i-Octanes | 9.110 | 10.700 | 9.898 |
| n-Octane | 0.853 | 1.089 | 1.066 |
| Ethylbenzene | 0.150 | 0.179 | 0.141 |
| Xylenes | 0.623 | 0.741 | 0.590 |
| i-Nonanes | 1.549 | 2.099 | 1.926 |
| n-Nonane | 0.342 | 0.490 | 0.472 |
| i-Decanes | 0.248 | 0.354 | 0.301 |
| Decanes Plus | 3.786 | 7.685 | 7.005 |
| | 100.000 | 100.000 | 100.000 |

| Calculated Physical Properties | Total | C10+ |
|---|---|---|
| API Gravity at 60°F | 72.7803 | 54.3309 |
| Pounds per Gallon (in Air) | 5.769 | 6.341 |
| Pounds per Gallon (in Vacuum) | 5.775 | 6.348 |
| Cu. Ft. Vapor per Gallon @ 14.696 psia | 24.487 | 13.502 |
| Specific Gravity at 60°F | 0.6927 | 0.7614 |
| Molecular Weight | 89.496 | 178.418 |
| BTU / GAL. (as a vapor) | 119204 | 130237 |
| BTU / LB. (as a vapor) | 20640 | 20514 |

Data reviewed by: Krystle Fitzwater, Laboratory Manager

Quality Assurance: The above analyses are performed in accordance with ASTM, UOP, GPA guidelines for quality assurance, unless otherwise stated.

Powered By SURECHEM

# Certificate of Analysis

Number: 6030-22020089-001A

**Artesia Laboratory**
200 E Main St.
Artesia, NM 88210
Phone 575-746-3481

Tom Cleveland
Lucid Energy Group
3100 McKinnon St. #800
Dallas, TX 75201

Feb. 07, 2022

Station Name: Road Runner Gas Plant Tank Condensate
Station Number: N/A
Station Location: Lucid

Sampled By: Michael Mirabal
Sample Of: Liquid Spot
Sample Date: 02/03/2022 01:43
Sample Conditions:

## Analytical Data

| Test | Method | Result | Units | Detection Limit | Lab Tech. | Analysis Date |
|---|---|---|---|---|---|---|
| VP of Crude Oil: V/L = 4:1 @ 37.8 °F | ASTM D-6377 | 9.09 | psi | | KNF | 02/07/2022 |
| RVPE (D323 Equivalent) @ 3.2 °C | ASTM D-6377 | 8.32 | psi | | KNF | 02/07/2022 |

Data reviewed by: Krystle Fitzwater, Laboratory Manager

Quality Assurance: The above analyses are performed in accordance with ASTM, UOP, GPA guidelines for quality assurance, unless otherwise stated.

Powered By SURECHEM

# Certificate of Analysis

Number: 5030-19110424-001A

**Midland Laboratory**
2200 East I-20
Midland, TX 79706
Phone 432-689-7252

Lucid Energy Group
416 E. Main St.
Artesia, NM 88210

Nov. 21, 2019

Station Name: ROAD RUNNER INLET
Method: GPA 2286
Cylinder No: A102
Analyzed: 11/20/2019 19:30:36 by WH

Sampled By: DEREK SAUDER
Sample Of: Gas Spot
Sample Date: 11/19/2019
Sample Conditions: 797.5 psig, @ 75 °F

## Analytical Data

| Components | Mol. % | Wt. % | GPM at 14.696 psia |
|---|---|---|---|
| Hydrogen Sulfide | 0.000 | 0.000 | |
| Nitrogen | 1.397 | 1.840 | |
| Carbon Dioxide | 0.330 | 0.683 | |
| Methane | 76.983 | 58.062 | |
| Ethane | 12.234 | 17.295 | 3.275 |
| Propane | 5.668 | 11.750 | 1.563 |
| Iso-butane | 0.717 | 1.959 | 0.235 |
| n-Butane | 1.595 | 4.358 | 0.503 |
| Iso-pentane | 0.287 | 0.973 | 0.105 |
| n-Pentane | 0.288 | 0.977 | 0.105 |
| Hexanes Plus | 0.501 | 2.103 | 0.199 |
| | 100.000 | 100.000 | 5.985 |

| | |
|---|---|
| GPM TOTAL C2+ | 5.985 |
| GPM TOTAL C3+ | 2.710 |
| GPM TOTAL iC5+ | 0.409 |

| **Calculated Physical Properties** | **Total** | **C6+** |
|---|---|---|
| Relative Density Real Gas | 0.7367 | 3.0526 |
| Calculated Molecular Weight | 21.27 | 88.41 |
| Compressibility Factor | 0.9964 | |
| **GPA 2172 Calculation:** | | |
| **Calculated Gross BTU per ft³ @ 14.696 psia & 60°F** | | |
| Real Gas Dry BTU | 1264 | 4785 |
| Water Sat. Gas Base BTU | 1242 | 4701 |

Hydrocarbon Laboratory Manager

Quality Assurance: The above analyses are performed in accordance with ASTM, UOP, GPA guidelines for quality assurance, unless otherwise stated.

# Certificate of Analysis

Number: 5030-19110424-001A

**Midland Laboratory**
2200 East I-20
Midland, TX 79706
Phone 432-689-7252

Lucid Energy Group
416 E. Main St.
Artesia, NM 88210

Nov. 21, 2019

Station Name: ROAD RUNNER INLET
Method: GPA 2286
Cylinder No: A102
Analyzed: 11/20/2019 19:30:36 by WH

Sampled By: DEREK SAUDER
Sample Of: Gas Spot
Sample Date: 11/19/2019
Sample Conditions: 797.5 psig, @ 75 °F

## Analytical Data

| Components | Mol. % | Wt. % | GPM at 14.696 psia |
|---|---|---|---|
| Hydrogen Sulfide | 0.000 | 0.000 | |
| Nitrogen | 1.397 | 1.840 | |
| Methane | 76.983 | 58.062 | |
| Carbon Dioxide | 0.330 | 0.683 | |
| Ethane | 12.234 | 17.295 | 3.275 |
| Propane | 5.668 | 11.750 | 1.563 |
| Iso-Butane | 0.717 | 1.959 | 0.235 |
| n-Butane | 1.595 | 4.358 | 0.503 |
| Iso-Pentane | 0.287 | 0.973 | 0.105 |
| n-Pentane | 0.288 | 0.977 | 0.105 |
| Hexanes | 0.284 | 1.122 | 0.113 |
| Heptanes Plus | 0.217 | 0.981 | 0.086 |
| | 100.000 | 100.000 | 5.985 |

| | |
|---|---|
| GPM TOTAL C2+ | 5.9850 |
| GPM TOTAL C3+ | 2.7100 |
| GPM TOTAL iC5+ | 0.4090 |

| Calculated Physical Properties | Total | C7+ |
|---|---|---|
| Relative Density Real Gas | 0.7367 | 3.1977 |
| Calculated Molecular Weight | 21.27 | 92.61 |
| Compressibility Factor | 0.9964 | |
| **GPA 2172 Calculation:** | | |
| **Calculated Gross BTU per ft³ @ 14.696 psia & 60°F** | | |
| Real Gas Dry BTU | 1263.6 | 4913.3 |
| Water Sat. Gas Base BTU | 1241.5 | 4827.6 |

Hydrocarbon Laboratory Manager

Quality Assurance: The above analyses are performed in accordance with ASTM, UOP, GPA guidelines for quality assurance, unless otherwise stated.

# Certificate of Analysis

Number: 5030-19110424-001A

**Midland Laboratory**
2200 East I-20
Midland, TX 79706
Phone 432-689-7252

Lucid Energy Group
416 E. Main St.
Artesia, NM 88210

Nov. 21, 2019

Station Name: ROAD RUNNER INLET
Method: GPA 2286
Cylinder No: A102
Analyzed: 11/20/2019 19:30:36 by WH

Sampled By: DEREK SAUDER
Sample Of: Gas Spot
Sample Date: 11/19/2019
Sample Conditions: 797.5 psig, @ 75 °F

## Analytical Data

| Components | Mol. % | Wt. % | GPM at 14.696 psia |
|---|---|---|---|
| Nitrogen | 1.397 | 1.840 | |
| Methane | 76.983 | 58.062 | |
| Carbon Dioxide | 0.330 | 0.683 | |
| Hydrogen Sulfide | NIL | NIL | |
| Ethane | 12.234 | 17.295 | 3.275 |
| Propane | 5.668 | 11.750 | 1.563 |
| Iso-Butane | 0.717 | 1.959 | 0.235 |
| n-Butane | 1.595 | 4.358 | 0.503 |
| Iso-Pentane | 0.287 | 0.973 | 0.105 |
| n-Pentane | 0.288 | 0.977 | 0.105 |
| i-Hexanes | 0.179 | 0.700 | 0.070 |
| n-Hexane | 0.105 | 0.422 | 0.043 |
| Benzene | 0.017 | 0.062 | 0.005 |
| Cyclohexane | 0.048 | 0.190 | 0.016 |
| i-Heptanes | 0.091 | 0.387 | 0.036 |
| n-Heptane | 0.017 | 0.079 | 0.008 |
| Toluene | 0.007 | 0.029 | 0.002 |
| i-Octanes | 0.034 | 0.174 | 0.016 |
| n-Octane | 0.002 | 0.012 | 0.001 |
| Ethylbenzene | NIL | 0.001 | NIL |
| Xylenes | NIL | 0.007 | 0.001 |
| i-Nonanes | 0.001 | 0.016 | 0.001 |
| n-Nonane | NIL | 0.004 | NIL |
| i-Decanes | NIL | 0.008 | NIL |
| n-Decane | NIL | 0.002 | NIL |
| Undecanes | NIL | 0.002 | NIL |
| Dodecanes | NIL | 0.002 | NIL |
| Tridecanes | NIL | 0.005 | NIL |
| Tetradecanes Plus | NIL | 0.001 | NIL |
| | 100.000 | 100.000 | 5.985 |

GPM TOTAL C2+ 5.985

| Calculated Physical Properties | Total | C14+ |
|---|---|---|
| Relative Density Real Gas | 0.7367 | NIL |
| Calculated Molecular Weight | 21.271 | NIL |
| Compressibility Factor | 0.9964 | |
| **GPA 2172 Calculation:** | | |
| **Calculated Gross BTU per ft³ @ 14.696 psia & 60°F** | | |
| Real Gas Dry BTU | 1263.6 | NIL |
| Water Sat. Gas Base BTU | 1241.5 | NIL |

Hydrocarbon Laboratory Manager

Quality Assurance: The above analyses are performed in accordance with ASTM, UOP, GPA guidelines for quality assurance, unless otherwise stated.

PANTECHS LABORATORIES, INC.

*Leaders in Petroleum Analytical Services*
*www.pantechs.com*

# Analytical Report

| | | | |
|---|---|---|---|
| **Customer:** | Lucid Energy Delaware | **Order:** | O29-2140 |
| **Location:** | Road Runner Plant | **Received:** | 7/27/2021 |
| **Description:** | Fuel Gas | **Primary Contact:** | Jaylen Fuentes |

**REPORT DISTRIBUTION:**

Jaylen Fuentes

All data reported in this Analytical Report is in compliance with the test method(s) performed as of the date noted above. The validity and integrity of this report will remain intact as long as it is accompanied by this page and reproduced in full. Any datafile (e.g. txt, csv, etc.) produced which is associated with the results in this report shall be considered for convenience only and does not supersede this report as the official test results. We reserve the right to return to you any unused samples received if we consider so necessary (e.g. samples identified as hazardous waste).

We appreciate you choosing Pantechs Laboratories. If you have any questions concerning this report, please feel free to contact us at any time.

**Pantechs Laboratories, Inc.**
**Order: O29-2140  Order Date: 7/27/2021**
**Order Description: Road Runner Plant, Fuel Gas**

| Sample List | | | | | | |
|---|---|---|---|---|---|---|
| **Fluid** | **Operator** | **Location** | **Site** | **Sample Point** | **Date** | **Time** |
| Gas | Lucid Energy Delaware | Road Runner Plant | Fuel Gas | Fuel Meter | 7/27/2021 | 12:23 PM |

| No Sample List | | | | |
|---|---|---|---|---|
| **Operator** | **Location** | **Site** | **Sample Point** | **Comment** |

**Pantechs Laboratories, Inc. - Order: O29-2140 - Order Date: 7/27/2021**
**Order Description: Road Runner Plant, Fuel Gas**

| SAMPLE ID | | COLLECTION DATA | |
|---|---|---|---|
| **Operator** | Lucid Energy Delaware | **Pressure** | 15 psig |
| **Location** | Road Runner Plant | **Sample Temp** | N/A |
| **Site** | Fuel Gas | **Atm Temp** | 80 F |
| **Site Type** | Meter | **Collection Date** | 07/27/2021 |
| **Sample Point** | Fuel Meter | **Collection Time** | 12:23 PM |
| **Spot/Comp** | Spot | **Collection By** | Cody Carson |
| **Meter ID** | | **Pressure Base** | 14.730 psi |
| **Purchaser** | | **Temperature Base** | 60 F |
| **Fluid** | Gas | **Container(s)** | PLS029 , PL2136 |

## Onsite Testing by Stain Tube

| METHOD | TYPE | MOL% | GRAINS/100 | PPMV |
|---|---|---|---|---|
| GPA2377 | H2S | 0.0000 | 0.00 | 0.0 |

## GPA 2286 Gas Extended Fractional Analysis

| COMPOUND | FORMULA | MOL% | WT% | GPM |
|---|---|---|---|---|
| **HELIUM** | He | 0.0064 | 0.0014 | 0.0006 |
| **NITROGEN** | N2 | 1.1398 | 1.8037 | 0.1251 |
| **CARBON DIOXIDE** | CO2 | 0.5582 | 1.3878 | 0.0950 |
| ***OXYGEN+ARGON** | O2+Ar | 0.0037 | 0.0067 | 0.0003 |
| **HYDROGEN SULFIDE** | H2S | 0.0000 | 0.0000 | 0.0000 |
| **METHANE** | C1 | 88.8585 | 80.5282 | 15.0243 |
| **ETHANE** | C2 | 9.1322 | 15.5122 | 2.4358 |
| **PROPANE** | C3 | 0.2906 | 0.7239 | 0.0798 |
| **I-BUTANE** | iC4 | 0.0071 | 0.0233 | 0.0023 |
| **N-BUTANE** | nC4 | 0.0027 | 0.0089 | 0.0008 |
| **I-PENTANE** | iC5 | 0.0001 | 0.0004 | 0.0000 |
| **N-PENTANE** | nC5 | 0.0001 | 0.0004 | 0.0000 |
| **NEO-PENTANE** | neC5 | 0.0002 | 0.0008 | 0.0001 |
| **HEXANES PLUS** | C6+ | 0.0004 | 0.0023 | 0.0001 |
| **TOTALS:** | | **100.0000** | **100.0000** | **17.7645** |

*Value of "0.0000" interpreted as below detectable limit. Onsite H2S value is used in fractional if performed.*
***Oxygen+Argon:** Compounds elute as single peak; additional testing required to distinguish each.*

| LIQUID YIELD | C2+ | C3+ | C4+ | C5+ | 26# Liquid | 10# Liquid |
|---|---|---|---|---|---|---|
| **GAL/MSCF** | 2.5191 | 0.0833 | 0.0035 | 0.0002 | 0.0004 | |
| **CALC PROP** | **BTU/CF** | **Specific Gr.** | **Z Factor** | **Mol Weight** | **LB/SCF** | **Wobbe IDX** |
| **DRY** | 1,071.8 | 0.6124 | 0.9976 | 18.70 | 0.0495 | 1,369.5 |
| **WATER SAT.** | 1,054.4 | 0.6128 | 0.9973 | 18.38 | 0.0486 | |
| **C6+ ONLY** | 5,052.8 | 3.4484 | | 99.88 | | |

## Hexanes Plus Detail - Road Runner Plant:Fuel Gas:Fuel Meter:7/27/2021

| C6 GROUP | FORMULA | MOL% | WT% |
|---|---|---|---|
| 2,2-dimethylbutane | C6H14 | 0.000000 | 0.000000 |
| 2,3-dimethylbutane+cyclopentane | C6H14 | 0.000000 | 0.000000 |
| 2-methylpentane | C6H14 | 0.000000 | 0.000000 |
| 3-methylpentane | C6H14 | 0.000000 | 0.000000 |
| benzene | C6H6 | 0.000183 | 0.000808 |
| cyclohexane | C6H12 | 0.000000 | 0.000000 |
| methylcyclopentane | C6H12 | 0.000000 | 0.000000 |
| n-hexane | C6H14 | 0.000054 | 0.000263 |
| **TOTALS:** | | **0.000237** | **0.001071** |

| C7 GROUP | FORMULA | MOL% | WT% |
|---|---|---|---|
| 1,1-dimethylcyclopentane+3-methylhexane | C7H16 | 0.000000 | 0.000000 |
| 2,2-dimethylpentane | C7H16 | 0.000000 | 0.000000 |
| 2,3-dimethylpentane | C7H16 | 0.000000 | 0.000000 |
| 2,4-dimethylhexane+ethylcyclopentane | C7H14 | 0.000000 | 0.000000 |
| 2,4-dimethylpentane | C7H16 | 0.000000 | 0.000000 |
| 2-methylhexane | C7H16 | 0.000000 | 0.000000 |
| 3,3-dimethylpentane | C7H16 | 0.000000 | 0.000000 |
| cis-1,3-dimethylcyclopentane+3-Ethylpentane | C7H14 | 0.000000 | 0.000000 |
| cycloheptane | C7H14 | 0.000000 | 0.000000 |
| Methylcyclohexane+1,1,3-Trimethylpentane | C7H14 | 0.000000 | 0.000000 |
| n-heptane | C7H16 | 0.000030 | 0.000170 |
| toluene | C7H8 | 0.000093 | 0.000484 |
| trans-1,2-dimethylcyclopentane+cis-1,2-Dimethylcyclopentane | C7H14 | 0.000000 | 0.000000 |
| trans-1,3-dimethylcyclopentane | C7H14 | 0.000000 | 0.000000 |
| **TOTALS:** | | **0.000123** | **0.000654** |

| C8 GROUP | FORMULA | MOL% | WT% |
|---|---|---|---|
| 1-ethyl-1-methylcyclopentane | C8H16 | 0.000000 | 0.000000 |
| 2,2,3-trimethylpentane | C8H18 | 0.000000 | 0.000000 |
| 2,2,4-trimethylpentane | C8H18 | 0.000000 | 0.000000 |
| 2,3,4-trimethylpentane | C8H18 | 0.000000 | 0.000000 |
| 2,5-dimethylhexane | C8H18 | 0.000000 | 0.000000 |
| 2-methylheptane+4-methylheptane | C8H18 | 0.000000 | 0.000000 |
| 3,3-dimethylhexane | C8H18 | 0.000000 | 0.000000 |
| 3-methylheptane | C8H18 | 0.000000 | 0.000000 |
| cis-1,2-dimethylcyclohexane | C8H16 | 0.000000 | 0.000000 |
| cis-1,3-dimethylcyclohexane | C8H16 | 0.000000 | 0.000000 |

| | | | |
|---|---|---|---|
| cyclooctane | C8H16 | 0.000000 | 0.000000 |
| ethylbenzene | C8H10 | 0.000029 | 0.000174 |
| ethylcyclohexane | C8H16 | 0.000000 | 0.000000 |
| m-xylene+p-xylene | C8H10 | 0.000000 | 0.000000 |
| n-octane | C8H18 | 0.000032 | 0.000206 |
| o-xylene | C8H10 | 0.000000 | 0.000000 |
| trans-1,3-dimethylcyclohexane | C8H16 | 0.000000 | 0.000000 |
| **TOTALS:** | | **0.000061** | **0.000380** |

| C9 GROUP | FORMULA | MOL% | WT% |
|---|---|---|---|
| 1,1,2-trimethylcyclohexane | C9H18 | 0.000000 | 0.000000 |
| 1,2,3-trimethylbenzene | C9H12 | 0.000000 | 0.000000 |
| 1,2,4-trimethylbenzene+tert-butylbenzene | C9H12 | 0.000000 | 0.000000 |
| 1,3,5-trimethylbenzene | C9H12 | 0.000000 | 0.000000 |
| 2,2,3-trimethylhexane | C9H20 | 0.000000 | 0.000000 |
| 2,2,4-trimethylhexane | C9H20 | 0.000000 | 0.000000 |
| 2,2-dimethylheptane | C9H20 | 0.000000 | 0.000000 |
| 2,3,4-trimethylhexane | C9H20 | 0.000000 | 0.000000 |
| 2,4,4-trimethylhexane | C9H20 | 0.000000 | 0.000000 |
| 2,5-dimethylheptane | C9H20 | 0.000000 | 0.000000 |
| 2-methyloctane | C9H20 | 0.000000 | 0.000000 |
| 3,4-dimethylheptane | C9H20 | 0.000000 | 0.000000 |
| cis-1,2,trans-1,4-1,2,4-trimethylcyclohexane | C9H18 | 0.000000 | 0.000000 |
| cis,cis-1,2,3-trimethylcyclohexane | C9H18 | 0.000000 | 0.000000 |
| isopropylbenzene | C9H12 | 0.000000 | 0.000000 |
| methylcyclooctane | C9H18 | 0.000000 | 0.000000 |
| m-ethyltoluene+p-ethyltoluene | C9H12 | 0.000000 | 0.000000 |
| n-nonane | C9H20 | 0.000021 | 0.000152 |
| propylbenzene | C9H12 | 0.000000 | 0.000000 |
| propylcyclohexane | C9H18 | 0.000000 | 0.000000 |
| r-1,t-2,c-3-trimethylcyclohexane | C9H18 | 0.000000 | 0.000000 |
| r-1,t-2,t-4-trimethylcyclohexane | C9H18 | 0.000000 | 0.000000 |
| Unidentified C9 | C9 | 0.000000 | 0.000000 |
| **TOTALS:** | | **0.000021** | **0.000152** |

| C10 GROUP | FORMULA | MOL% | WT% |
|---|---|---|---|
| 1,2,3,4-tetramethylbenzene | C10H14 | 0.000000 | 0.000000 |
| 1,2,3,5-tetramethylbenzene | C10H14 | 0.000000 | 0.000000 |
| 1,2,4,5-tetramethylbenzene | C10H14 | 0.000000 | 0.000000 |
| 1,2-diethylbenzene | C10H14 | 0.000000 | 0.000000 |

| | | | |
|---|---|---|---|
| 1,2-dimethyl-3-ethylbenzene | C10H14 | 0.000000 | 0.000000 |
| 1,2-dimethyl-4-ethylbenzene | C10H14 | 0.000000 | 0.000000 |
| 1,3-diethylbenzene | C10H14 | 0.000000 | 0.000000 |
| 1,3-dimethyl-2-ethylbenzene | C10H14 | 0.000000 | 0.000000 |
| 1,4-diethylbenzene | C10H14 | 0.000000 | 0.000000 |
| 1,4-dimethyl-2-ethylbenzene | C10H14 | 0.000000 | 0.000000 |
| 1-methyl-2-isopropylbenzene | C10H14 | 0.000000 | 0.000000 |
| 1-methyl-2-propylbenzene | C10H14 | 0.000000 | 0.000000 |
| 1-methyl-3-isopropylbenzene | C10H14 | 0.000000 | 0.000000 |
| 1-methyl-4-isopropylbenzene | C10H14 | 0.000000 | 0.000000 |
| 2-methylnonane | C10H22 | 0.000000 | 0.000000 |
| 3-ethyloctane | C10H22 | 0.000000 | 0.000000 |
| 3-methylnonane | C10H22 | 0.000000 | 0.000000 |
| 4-methylnonane | C10H22 | 0.000000 | 0.000000 |
| butylbenzene | C10H14 | 0.000000 | 0.000000 |
| butylcyclohexane | C10H20 | 0.000000 | 0.000000 |
| isobutylbenzene | C10H14 | 0.000000 | 0.000000 |
| naphthalene | C10H8 | 0.000000 | 0.000000 |
| n-decane | C10H22 | 0.000000 | 0.000000 |
| sec-butylbenzene | C10H14 | 0.000000 | 0.000000 |
| tert-butylcyclohexane | C10H20 | 0.000000 | 0.000000 |
| Unidentified C10 | C10 | 0.000000 | 0.000000 |
| **TOTALS:** | | **0.000000** | **0.000000** |

| C11 GROUP | FORMULA | MOL% | WT% |
|---|---|---|---|
| n-undecane | C11H24 | 0.000000 | 0.000000 |
| pentylbenzene | C11H16 | 0.000000 | 0.000000 |
| Unidentified C11 | C11 | 0.000000 | 0.000000 |
| **TOTALS:** | | **0.000000** | **0.000000** |

| C12 GROUP | FORMULA | MOL% | WT% |
|---|---|---|---|
| n-dodecane | C12H26 | 0.000000 | 0.000000 |
| Unidentified C12 | C12 | 0.000000 | 0.000000 |
| **TOTALS:** | | **0.000000** | **0.000000** |

| C13 GROUP | FORMULA | MOL% | WT% |
|---|---|---|---|
| n-tridecane | C13H28 | 0.000000 | 0.000000 |
| Unidentified C13 | C13 | 0.000000 | 0.000000 |
| **TOTALS:** | | **0.000000** | **0.000000** |

| C14 GROUP | FORMULA | MOL% | WT% |
|---|---|---|---|

| | | | |
|---|---|---|---|
| n-tetradecane | C14H30 | *0.000000* | *0.000000* |
| Unidentified C14 | C14 | *0.000000* | *0.000000* |
| **TOTALS:** | | **0.000000** | **0.000000** |

| C15+ GROUP | FORMULA | MOL% | WT% |
|---|---|---|---|
| n-pentadecane | C15H32 | *0.000000* | *0.000000* |
| Unidentified C15 | C15 | *0.000000* | *0.000000* |
| **TOTALS:** | | **0.000000** | **0.000000** |

**Road Runner Plant:Fuel Gas:Fuel Meter:7/27/2021**
**ASTM D5504 Gas Sulfur Speciation**

| SUMMARY | PPMV | GRAINS/100 SCF | PPMW |
|---|---|---|---|
| **COMPOUND TOTALS:** | **0.0** | **0.00** | **0.0** |
| **TOTAL SULFUR, AS MASS OF SULFUR (PPMW):** | | | **0.0** |

## Speciation Detail

| SULFIDE GROUP | PPMV | GRAINS/100 SCF | PPMW |
|---|---|---|---|
| hydrogen sulfide | *0.0* | *0.00* | *0.0* |
| carbonyl sulfide | *0.0* | *0.00* | *0.0* |
| Dimethyl Sulfide | *0.0* | *0.00* | *0.0* |
| Methyl Ethyl Sulfide | *0.0* | *0.00* | *0.0* |
| Diethyl Sulfide | *0.0* | *0.00* | *0.0* |
| t-Butyl Methyl Sulfide | *0.0* | *0.00* | *0.0* |
| Methyl sec-Butyl Sulfide | *0.0* | *0.00* | *0.0* |
| Ethyl n-Propyl Sulfide | *0.0* | *0.00* | *0.0* |
| Diisopropyl Sulfide | *0.0* | *0.00* | *0.0* |
| Propyl Sulfide | *0.0* | *0.00* | *0.0* |
| tert-Butyl Sulfide | *0.0* | *0.00* | *0.0* |
| **SULFIDE TOTALS:** | **0.0** | **0.00** | **0.0** |

| DISULFIDE GROUP | PPMV | GRAINS/100 SCF | PPMW |
|---|---|---|---|
| Carbon Disulfide | *0.0* | *0.00* | *0.0* |
| Dimethyl Disulfide | *0.0* | *0.00* | *0.0* |
| Ethyl Methyl Disulfide | *0.0* | *0.00* | *0.0* |
| Methyl i-Propyl Disulfide | *0.0* | *0.00* | *0.0* |
| Diethyl Disulfide | *0.0* | *0.00* | *0.0* |
| Propyl Methyl Disulfide | *0.0* | *0.00* | *0.0* |
| Methyl tert-Butyl Disulfide | *0.0* | *0.00* | *0.0* |
| Ethyl i-Propyl Disulfide | *0.0* | *0.00* | *0.0* |
| Methyl sec-Butyl Disulfide | *0.0* | *0.00* | *0.0* |
| Ethyl Propyl Disulfide+1-Heptanethiol | *0.0* | *0.00* | *0.0* |
| i-Propyl Disulfide | *0.0* | *0.00* | *0.0* |
| n-Propyl Disulfide | *0.0* | *0.00* | *0.0* |
| t-Butyl Disulfide | *0.0* | *0.00* | *0.0* |
| Diphenyl Disulfide | *0.0* | *0.00* | *0.0* |
| **DISULFIDE TOTALS:** | **0.0** | **0.00** | **0.0** |

| MERCAPTAN GROUP | PPMV | GRAINS/100 SCF | PPMW |
|---|---|---|---|
| Methyl Mercaptan | *0.0* | *0.00* | *0.0* |
| Ethyl Mercaptan | *0.0* | *0.00* | *0.0* |

| | | | |
|---|---|---|---|
| i-Propyl Mercaptan | 0.0 | 0.00 | 0.0 |
| n-Propyl Mercaptan | 0.0 | 0.00 | 0.0 |
| tert-Butyl Mercaptan | 0.0 | 0.00 | 0.0 |
| sec-Butyl Mercaptan | 0.0 | 0.00 | 0.0 |
| i-Butyl Mercaptan | 0.0 | 0.00 | 0.0 |
| n-Butyl Mercaptan | 0.0 | 0.00 | 0.0 |
| 1,5-Pentanedithiol | 0.0 | 0.00 | 0.0 |
| 2 and 3-Methyl-1-Butanethiol+Tetrahydrothiophene | 0.0 | 0.00 | 0.0 |
| 1-Pentanethiol | 0.0 | 0.00 | 0.0 |
| 1,2-Ethanethiol | 0.0 | 0.00 | 0.0 |
| 1-Hexanethiol | 0.0 | 0.00 | 0.0 |
| Thiophenol | 0.0 | 0.00 | 0.0 |
| 1,4-Butanethiol | 0.0 | 0.00 | 0.0 |
| 1-Octanethiol | 0.0 | 0.00 | 0.0 |
| 1-Nonanethiol | 0.0 | 0.00 | 0.0 |
| 1-Decanethiol | 0.0 | 0.00 | 0.0 |
| **MERCAPTAN TOTALS:** | **0.0** | **0.00** | **0.0** |

| THIOPHENE GROUP | PPMV | GRAINS/100 SCF | PPMW |
|---|---|---|---|
| Thiophene | 0.0 | 0.00 | 0.0 |
| 2-Methylthiophene+3-Methylthiophene | 0.0 | 0.00 | 0.0 |
| 2-Ethyl Thiophene | 0.0 | 0.00 | 0.0 |
| 2-Bromothiophene | 0.0 | 0.00 | 0.0 |
| 2-Propylthiophene | 0.0 | 0.00 | 0.0 |
| 2-Butylthiophene | 0.0 | 0.00 | 0.0 |
| 3-Butylthiophene | 0.0 | 0.00 | 0.0 |
| Benzothiophene | 0.0 | 0.00 | 0.0 |
| 2-Methylbenzothiophene | 0.0 | 0.00 | 0.0 |
| **THIOPHENE TOTALS:** | **0.0** | **0.00** | **0.0** |

| OTHER SULFUR GROUP | PPMV | GRAINS/100 SCF | PPMW |
|---|---|---|---|
| sulfur dioxide | 0.0 | 0.00 | 0.0 |
| Unidentified Sulfur | 0.0 | 0.00 | 0.0 |
| **OTHER SULFUR TOTALS:** | **0.0** | **0.00** | **0.0** |

*Value of “0.0” interpreted as below detectable limit of 0.1 PPM Mol.*

PANTECHS LABORATORIES, INC.

*Leaders in Petroleum Analytical Services*
*www.pantechs.com*

# Analytical Report

9/21/2021

| | | | |
|---|---|---|---|
| **Customer:** | Lucid Energy Delaware | **Order:** | O148-2309 |
| **Location:** | Red Hills Processing Complex | **Received:** | 9/14/2021 |
| **Description:** | Flare Scrubbers and Amine/Glycol Waste Streams | **Primary Contact:** | Jaylen Fuentes |

**REPORT DISTRIBUTION:**

Jaylen Fuentes

All data reported in this Analytical Report is in compliance with the test method(s) performed as of the date noted above. The validity and integrity of this report will remain intact as long as it is accompanied by this page and reproduced in full. Any datafile (e.g. txt, csv, etc.) produced which is associated with the results in this report shall be considered for convenience only and does not supersede this report as the official test results. We reserve the right to return to you any unused samples received if we consider so necessary (e.g. samples identified as hazardous waste).

We appreciate you choosing Pantechs Laboratories. If you have any questions concerning this report, please feel free to contact us at any time.

**Pantechs Laboratories, Inc. - Order: O148-2309 - Order Date: 9/14/2021**
**Order Description: Red Hills Processing Complex, Flare Scrubbers and Amine/Glycol Waste Streams**

| SAMPLE ID | | COLLECTION DATA | |
|---|---|---|---|
| **Operator** | Lucid Energy Delaware | **Pressure** | 48 psig |
| **Location** | Road Runner Plant | **Sample Temp** | N/A |
| **Site** | Flare Header | **Atm Temp** | 88 F |
| **Site Type** | Plant | **Collection Date** | 09/14/2021 |
| **Sample Point** | Cold Side | **Collection Time** | 12:20 PM |
| **Spot/Comp** | Spot | **Collection By** | Cody Carson |
| **Meter ID** | | **Pressure Base** | 14.730 psi |
| **Purchaser** | | **Temperature Base** | 60 F |
| **Fluid** | Gas | **Container(s)** | PLS022 , PL2473 |

## GPA 2286 Gas Extended Fractional Analysis

| COMPOUND | FORMULA | MOL% | WT% | GPM |
|---|---|---|---|---|
| **HELIUM** | He | 0.0071 | 0.0016 | 0.0007 |
| **NITROGEN** | N2 | 1.2421 | 1.9343 | 0.1363 |
| **CARBON DIOXIDE** | CO2 | 0.0560 | 0.1370 | 0.0095 |
| ***OXYGEN+ARGON** | O2+Ar | 0.0047 | 0.0084 | 0.0004 |
| **HYDROGEN SULFIDE** | H2S | 0.0000 | 0.0000 | 0.0000 |
| **METHANE** | C1 | 88.3783 | 78.8166 | 14.9414 |
| **ETHANE** | C2 | 9.0801 | 15.1779 | 2.4216 |
| **PROPANE** | C3 | 0.6880 | 1.6865 | 0.1890 |
| **I-BUTANE** | iC4 | 0.0644 | 0.2081 | 0.0210 |
| **N-BUTANE** | nC4 | 0.1371 | 0.4430 | 0.0431 |
| **I-PENTANE** | iC5 | 0.0350 | 0.1404 | 0.0128 |
| **N-PENTANE** | nC5 | 0.0481 | 0.1929 | 0.0174 |
| **NEO-PENTANE** | neC5 | 0.0013 | 0.0052 | 0.0005 |
| **HEXANES PLUS** | C6+ | 0.2578 | 1.2481 | 0.0904 |
| **TOTALS:** | | **100.0000** | **100.0000** | **17.8841** |

*Value of "0.0000" interpreted as below detectable limit. Onsite H2S value is used in fractional if performed.*
***Oxygen+Argon:** Compounds elute as single peak; additional testing required to distinguish each.*

| LIQUID YIELD | C2+ | C3+ | C4+ | C5+ | 26# Liquid | 10# Liquid |
|---|---|---|---|---|---|---|
| **GAL/MSCF** | 2.7958 | 0.3742 | 0.1852 | 0.1205 | 0.1868 | |
| **CALC PROP** | **BTU/CF** | **Specific Gr.** | **Z Factor** | **Mol Weight** | **LB/SCF** | **Wobbe IDX** |
| **DRY** | 1,097.4 | 0.6224 | 0.9975 | 18.64 | 0.0493 | 1,391.0 |
| **WATER SAT.** | 1,079.5 | 0.6227 | 0.9971 | 18.31 | 0.0485 | |
| **C6+ ONLY** | 4,475.3 | 3.0069 | | 87.09 | | |

## Hexanes Plus Detail - Road Runner Plant:Flare Header:Cold Side:9/14/2021

| C6 GROUP | FORMULA | MOL% | WT% |
|---|---|---|---|
| 2,2-dimethylbutane | C6H14 | 0.000442 | 0.002117 |
| 2,3-dimethylbutane+cyclopentane | C6H14 | 0.004374 | 0.020954 |
| 2-methylpentane | C6H14 | 0.012563 | 0.060184 |
| 3-methylpentane | C6H14 | 0.007080 | 0.033917 |
| benzene | C6H6 | 0.091849 | 0.398834 |
| cyclohexane | C6H12 | 0.029683 | 0.138871 |
| methylcyclopentane | C6H12 | 0.018108 | 0.084718 |
| n-hexane | C6H14 | 0.019024 | 0.091135 |
| **TOTALS:** | | **0.183123** | **0.830730** |

| C7 GROUP | FORMULA | MOL% | WT% |
|---|---|---|---|
| 1,1-dimethylcyclopentane+3-methylhexane | C7H16 | 0.002711 | 0.015101 |
| 2,2-dimethylpentane | C7H16 | *0.000000* | *0.000000* |
| 2,3-dimethylpentane | C7H16 | 0.000620 | 0.003454 |
| 2,4-dimethylhexane+ethylcyclopentane | C7H14 | 0.000059 | 0.000322 |
| 2,4-dimethylpentane | C7H16 | *0.000000* | *0.000000* |
| 2-methylhexane | C7H16 | 0.001847 | 0.010288 |
| 3,3-dimethylpentane | C7H16 | *0.000000* | *0.000000* |
| cis-1,3-dimethylcyclopentane+3-Ethylpentane | C7H14 | 0.001783 | 0.009732 |
| cycloheptane | C7H14 | 0.000019 | 0.000104 |
| Methylcyclohexane+1,1,3-Trimethylpentane | C7H14 | 0.013266 | 0.072409 |
| n-heptane | C7H16 | 0.004923 | 0.027422 |
| toluene | C7H8 | 0.027159 | 0.139109 |
| trans-1,2-dimethylcyclopentane+cis-1,2-Dimethylcyclopentane | C7H14 | 0.000951 | 0.005191 |
| trans-1,3-dimethylcyclopentane | C7H14 | 0.002893 | 0.015791 |
| **TOTALS:** | | **0.056231** | **0.298923** |

| C8 GROUP | FORMULA | MOL% | WT% |
|---|---|---|---|
| 1-ethyl-1-methylcyclopentane | C8H16 | 0.000194 | 0.001210 |
| 2,2,3-trimethylpentane | C8H18 | 0.003386 | 0.021501 |
| 2,2,4-trimethylpentane | C8H18 | 0.004538 | 0.028816 |
| 2,3,4-trimethylpentane | C8H18 | 0.000151 | 0.000959 |
| 2,5-dimethylhexane | C8H18 | 0.000320 | 0.002032 |
| 2-methylheptane+4-methylheptane | C8H18 | 0.000912 | 0.005791 |
| 3,3-dimethylhexane | C8H18 | 0.000292 | 0.001854 |
| 3-methylheptane | C8H18 | 0.000171 | 0.001086 |
| cis-1,2-dimethylcyclohexane | C8H16 | 0.001204 | 0.007511 |
| cis-1,3-dimethylcyclohexane | C8H16 | 0.000198 | 0.001235 |

| | | | |
|---|---|---|---|
| cyclooctane | C8H16 | 0.000079 | 0.000493 |
| ethylbenzene | C8H10 | 0.000424 | 0.002502 |
| ethylcyclohexane | C8H16 | 0.000483 | 0.003013 |
| m-xylene+p-xylene | C8H10 | 0.001805 | 0.010653 |
| n-octane | C8H18 | 0.000960 | 0.006096 |
| o-xylene | C8H10 | 0.000444 | 0.002620 |
| trans-1,3-dimethylcyclohexane | C8H16 | 0.000068 | 0.000424 |
| **TOTALS:** | | **0.015629** | **0.097796** |

| C9 GROUP | FORMULA | MOL% | WT% |
|---|---|---|---|
| 1,1,2-trimethylcyclohexane | C9H18 | 0.000087 | 0.000611 |
| 1,2,3-trimethylbenzene | C9H12 | 0.000063 | 0.000421 |
| 1,2,4-trimethylbenzene+tert-butylbenzene | C9H12 | 0.000151 | 0.001009 |
| 1,3,5-trimethylbenzene | C9H12 | 0.000068 | 0.000454 |
| 2,2,3-trimethylhexane | C9H20 | *0.000000* | *0.000000* |
| 2,2,4-trimethylhexane | C9H20 | 0.000225 | 0.001604 |
| 2,2-dimethylheptane | C9H20 | 0.000043 | 0.000307 |
| 2,3,4-trimethylhexane | C9H20 | 0.000086 | 0.000613 |
| 2,4,4-trimethylhexane | C9H20 | 0.000207 | 0.001476 |
| 2,5-dimethylheptane | C9H20 | 0.000259 | 0.001847 |
| 2-methyloctane | C9H20 | 0.000085 | 0.000606 |
| 3,4-dimethylheptane | C9H20 | 0.000080 | 0.000570 |
| cis-1,2,trans-1,4-1,2,4-trimethylcyclohexane | C9H18 | 0.000031 | 0.000218 |
| cis,cis-1,2,3-trimethylcyclohexane | C9H18 | 0.000068 | 0.000477 |
| isopropylbenzene | C9H12 | 0.000053 | 0.000354 |
| methylcyclooctane | C9H18 | *0.000000* | *0.000000* |
| m-ethyltoluene+p-ethyltoluene | C9H12 | 0.000051 | 0.000341 |
| n-nonane | C9H20 | 0.000218 | 0.001554 |
| propylbenzene | C9H12 | 0.000052 | 0.000347 |
| propylcyclohexane | C9H18 | 0.000105 | 0.000737 |
| r-1,t-2,c-3-trimethylcyclohexane | C9H18 | 0.000020 | 0.000140 |
| r-1,t-2,t-4-trimethylcyclohexane | C9H18 | 0.000072 | 0.000505 |
| Unidentified C9 | C9 | 0.000186 | 0.001326 |
| **TOTALS:** | | **0.002210** | **0.015517** |

| C10 GROUP | FORMULA | MOL% | WT% |
|---|---|---|---|
| 1,2,3,4-tetramethylbenzene | C10H14 | *0.000000* | *0.000000* |
| 1,2,3,5-tetramethylbenzene | C10H14 | *0.000000* | *0.000000* |
| 1,2,4,5-tetramethylbenzene | C10H14 | *0.000000* | *0.000000* |
| 1,2-diethylbenzene | C10H14 | *0.000000* | *0.000000* |

| | | | |
|---|---|---|---|
| 1,2-dimethyl-3-ethylbenzene | C10H14 | 0.000000 | 0.000000 |
| 1,2-dimethyl-4-ethylbenzene | C10H14 | 0.000000 | 0.000000 |
| 1,3-diethylbenzene | C10H14 | 0.000000 | 0.000000 |
| 1,3-dimethyl-2-ethylbenzene | C10H14 | 0.000000 | 0.000000 |
| 1,4-diethylbenzene | C10H14 | 0.000000 | 0.000000 |
| 1,4-dimethyl-2-ethylbenzene | C10H14 | 0.000000 | 0.000000 |
| 1-methyl-2-isopropylbenzene | C10H14 | 0.000000 | 0.000000 |
| 1-methyl-2-propylbenzene | C10H14 | 0.000000 | 0.000000 |
| 1-methyl-3-isopropylbenzene | C10H14 | 0.000000 | 0.000000 |
| 1-methyl-4-isopropylbenzene | C10H14 | 0.000043 | 0.000321 |
| 2-methylnonane | C10H22 | 0.000089 | 0.000704 |
| 3-ethyloctane | C10H22 | 0.000054 | 0.000427 |
| 3-methylnonane | C10H22 | 0.000000 | 0.000000 |
| 4-methylnonane | C10H22 | 0.000029 | 0.000229 |
| butylbenzene | C10H14 | 0.000022 | 0.000164 |
| butylcyclohexane | C10H20 | 0.000000 | 0.000000 |
| isobutylbenzene | C10H14 | 0.000000 | 0.000000 |
| naphthalene | C10H8 | 0.000011 | 0.000078 |
| n-decane | C10H22 | 0.000063 | 0.000498 |
| sec-butylbenzene | C10H14 | 0.000000 | 0.000000 |
| tert-butylcyclohexane | C10H20 | 0.000000 | 0.000000 |
| Unidentified C10 | C10 | 0.000186 | 0.001471 |
| **TOTALS:** | | **0.000497** | **0.003892** |

| C11 GROUP | FORMULA | MOL% | WT% |
|---|---|---|---|
| n-undecane | C11H24 | 0.000052 | 0.000452 |
| pentylbenzene | C11H16 | 0.000000 | 0.000000 |
| Unidentified C11 | C11 | 0.000000 | 0.000000 |
| **TOTALS:** | | **0.000052** | **0.000452** |

| C12 GROUP | FORMULA | MOL% | WT% |
|---|---|---|---|
| n-dodecane | C12H26 | 0.000052 | 0.000492 |
| Unidentified C12 | C12 | 0.000000 | 0.000000 |
| **TOTALS:** | | **0.000052** | **0.000492** |

| C13 GROUP | FORMULA | MOL% | WT% |
|---|---|---|---|
| n-tridecane | C13H28 | 0.000026 | 0.000266 |
| Unidentified C13 | C13 | 0.000000 | 0.000000 |
| **TOTALS:** | | **0.000026** | **0.000266** |

| C14 GROUP | FORMULA | MOL% | WT% |
|---|---|---|---|

| | | | |
|---|---|---|---|
| n-tetradecane | C14H30 | *0.000000* | *0.000000* |
| Unidentified C14 | C14 | *0.000000* | *0.000000* |
| **TOTALS:** | | **0.000000** | **0.000000** |

| C15+ GROUP | FORMULA | MOL% | WT% |
|---|---|---|---|
| n-pentadecane | C15H32 | *0.000000* | *0.000000* |
| Unidentified C15 | C15 | *0.000000* | *0.000000* |
| **TOTALS:** | | **0.000000** | **0.000000** |

## Road Runner Plant:Flare Header:Cold Side:9/14/2021
## ASTM D5504 Gas Sulfur Speciation

| SUMMARY | PPMV | GRAINS/100 SCF | PPMW |
|---|---|---|---|
| **COMPOUND TOTALS:** | **0.3** | **0.02** | **1.7** |
| **TOTAL SULFUR, AS MASS OF SULFUR (PPMW):** | | | **1.0** |

### Speciation Detail

| SULFIDE GROUP | PPMV | GRAINS/100 SCF | PPMW |
|---|---|---|---|
| hydrogen sulfide | *0.0* | *0.00* | *0.0* |
| carbonyl sulfide | *0.0* | *0.00* | *0.0* |
| Dimethyl Sulfide | *0.0* | *0.00* | *0.0* |
| Methyl Ethyl Sulfide | *0.0* | *0.00* | *0.0* |
| Diethyl Sulfide | *0.0* | *0.00* | *0.0* |
| t-Butyl Methyl Sulfide | *0.0* | *0.00* | *0.0* |
| Methyl sec-Butyl Sulfide | *0.0* | *0.00* | *0.0* |
| Ethyl n-Propyl Sulfide | *0.0* | *0.00* | *0.0* |
| Diisopropyl Sulfide | *0.0* | *0.00* | *0.0* |
| Propyl Sulfide | *0.0* | *0.00* | *0.0* |
| tert-Butyl Sulfide | *0.0* | *0.00* | *0.0* |
| **SULFIDE TOTALS:** | **0.0** | **0.00** | **0.0** |

| DISULFIDE GROUP | PPMV | GRAINS/100 SCF | PPMW |
|---|---|---|---|
| Carbon Disulfide | *0.0* | *0.00* | *0.0* |
| Dimethyl Disulfide | *0.0* | *0.00* | *0.0* |
| Ethyl Methyl Disulfide | *0.0* | *0.00* | *0.0* |
| Methyl i-Propyl Disulfide | *0.0* | *0.00* | *0.0* |
| Diethyl Disulfide | *0.0* | *0.00* | *0.0* |
| Propyl Methyl Disulfide | *0.0* | *0.00* | *0.0* |
| Methyl tert-Butyl Disulfide | *0.0* | *0.00* | *0.0* |
| Ethyl i-Propyl Disulfide | *0.0* | *0.00* | *0.0* |
| Methyl sec-Butyl Disulfide | *0.0* | *0.00* | *0.0* |
| Ethyl Propyl Disulfide+1-Heptanethiol | 0.1 | 0.01 | 0.8 |
| i-Propyl Disulfide | *0.0* | *0.00* | *0.0* |
| n-Propyl Disulfide | *0.0* | *0.00* | *0.0* |
| t-Butyl Disulfide | *0.0* | *0.00* | *0.0* |
| Diphenyl Disulfide | *0.0* | *0.00* | *0.0* |
| **DISULFIDE TOTALS:** | **0.1** | **0.01** | **0.8** |

| MERCAPTAN GROUP | PPMV | GRAINS/100 SCF | PPMW |
|---|---|---|---|
| Methyl Mercaptan | *0.0* | *0.00* | *0.0* |
| Ethyl Mercaptan | *0.0* | *0.00* | *0.0* |

| | | | |
|---|---|---|---|
| i-Propyl Mercaptan | 0.0 | 0.00 | 0.0 |
| n-Propyl Mercaptan | 0.0 | 0.00 | 0.0 |
| tert-Butyl Mercaptan | 0.0 | 0.00 | 0.0 |
| sec-Butyl Mercaptan | 0.0 | 0.00 | 0.0 |
| i-Butyl Mercaptan | 0.0 | 0.00 | 0.0 |
| n-Butyl Mercaptan | 0.0 | 0.00 | 0.0 |
| 1,5-Pentanedithiol | 0.0 | 0.00 | 0.0 |
| 2 and 3-Methyl-1-Butanethiol+Tetrahydrothiophene | 0.0 | 0.00 | 0.0 |
| 1-Pentanethiol | 0.0 | 0.00 | 0.0 |
| 1,2-Ethanethiol | 0.0 | 0.00 | 0.0 |
| 1-Hexanethiol | 0.0 | 0.00 | 0.0 |
| Thiophenol | 0.0 | 0.00 | 0.0 |
| 1,4-Butanethiol | 0.1 | 0.01 | 0.9 |
| 1-Octanethiol | 0.0 | 0.00 | 0.0 |
| 1-Nonanethiol | 0.0 | 0.00 | 0.0 |
| 1-Decanethiol | 0.0 | 0.00 | 0.0 |
| **MERCAPTAN TOTALS:** | **0.1** | **0.01** | **0.9** |

| THIOPHENE GROUP | PPMV | GRAINS/100 SCF | PPMW |
|---|---|---|---|
| Thiophene | 0.0 | 0.00 | 0.0 |
| 2-Methylthiophene+3-Methylthiophene | 0.0 | 0.00 | 0.0 |
| 2-Ethyl Thiophene | 0.0 | 0.00 | 0.0 |
| 2-Bromothiophene | 0.0 | 0.00 | 0.0 |
| 2-Propylthiophene | 0.0 | 0.00 | 0.0 |
| 2-Butylthiophene | 0.0 | 0.00 | 0.0 |
| 3-Butylthiophene | 0.0 | 0.00 | 0.0 |
| Benzothiophene | 0.0 | 0.00 | 0.0 |
| 2-Methylbenzothiophene | 0.0 | 0.00 | 0.0 |
| **THIOPHENE TOTALS:** | **0.0** | **0.00** | **0.0** |

| OTHER SULFUR GROUP | PPMV | GRAINS/100 SCF | PPMW |
|---|---|---|---|
| sulfur dioxide | 0.0 | 0.00 | 0.0 |
| Unidentified Sulfur | 0.0 | 0.00 | 0.0 |
| **OTHER SULFUR TOTALS:** | **0.0** | **0.00** | **0.0** |

*Value of "0.0" interpreted as below detectable limit of 0.1 PPM Mol.*

# 1.0 INTRODUCTION

## 1.1 Summary of Scope of Supply

The vertical thermal oxidizer is intended to oxidize the combustibles present in the specified waste stream. This is understood to apply only when the system is operated in accordance with the operating conditions stipulated in the design summary and for the waste(s) in Section 1.2.1 below.

The firing rate of the system is controlled by maintaining a specified operating temperature inside of the thermal oxidizer while the waste gas flow rates fluctuate. Efficient destruction of the waste is achieved at a thermal oxidizer operating temperature set point controlled at approximately 1,600 $^{o}$F. The temperature works in conjunction with the thermal oxidizer volume and its associated residence time to achieve the efficient destruction of the waste gas stream.

The thermal oxidizer design includes internal shop installed refractory insulation. The selected materials are designed for a long, trouble-free operating lifetime. The list below summarizes the services and equipment provided in Zeeco's supply.

One (1) Thermal Oxidizer Package Including:

- One (1) Vertical Thermal Oxidizer w/ Integral Stack (10'-0" O.D. x 76'-0" OAH)
- Shop Installed and dried to 500°F Refractory Lining
- One (1) GB Style Burner
- One (1) Fuel Control Rack w/ Local Control Panel
- One (1) Combustion Air Fan w/ Ducting

## 1.2 Process Description

The vertical forced draft thermal oxidizer is equipped with one (1) forced draft fuel gas GB-Series burner. When the purge cycle is complete, the burner pilot is ignited via electric ignition. Once the burner pilot flame is proven, the main burner flame is ignited. The thermal oxidizer is then allowed to achieve a waste permissive temperature of 1,600 $^{o}$F, following the recommended field cure procedures and schedule in APPENDIX D. Waste gas is then injected around the burner via the inlet nozzle. This high temperature accompanied with thermal oxidizer volume, known as residence time, destroys the hydrocarbon constituents of the waste gas stream. The flue gases from the thermal oxidizer then exit to atmosphere.

A temperature controller (supplied by others in DCS) monitors the combustion product's temperature through a thermocouple input and modulates both the fuel gas and combustion air flows into the burner. This ensures that sufficient temperature is maintained to provide complete destruction of varying waste gas compositions.

The fuel gas alone is used for start-up, burner stability, and refractory cure. The normal heat release for burner stability on fuel gas is ~44.8 MM BTU/HR. When more heat is needed for refractory curing, or if the heat produced by the combustion of the waste gas during operation is not sufficient to maintain a thermal oxidizer temperature of 1,600 $^{o}$F, a maximum fuel gas heat release of 75 MM BTU/HR is available from the burner.

Combustion air is supplied by the blower. All air enters the thermal oxidizer through the burner via the combustion air nozzle (N9) located on the thermal oxidizer. The flue gas exits the vent stack at an elevation of 76 feet.

### 1.2.1 Process Design Conditions for Waste Streams

| Acid Gas Stream: Normal Operating Conditions (note 4) | | | Glycol System OVHD Stream | | |
|---|---|---|---|---|---|
| Temperature | 120 | °F | Temperature | 120 | °F |
| Pressure (at Still Column) | 3 | psig | Pressure (at Still Column) | 1 | psig |
| Flow Rate | 15.52 | MMSCFD | Flow Rate | 0.03 | MMSCFD |
| | 646,716.7 | SCFH | | 1,175.0 | SCFH |
| Mol. Wt. | 41.2074 | | Mol. Wt. | 49.7237 | |
| Mass Flow Rate | 74,750 | lb/hr | Mass Flow Rate | 154.10 | lb/hr |
| Gross Heating Value (HHV) | 38.63 | BTU/SCF | Gross Heating Value (HHV) | 2,585 | BTU/SCF |
| Net Heating Value (LHV) | 31.29 | BTU/SCF | Net Heating Value (LHV) | 2397 | BTU/SCF |
| Gas Composition | | | Gas Composition | | |
| Carbon Dioxide | 88.74 | mol% | Carbon Dioxide | 0.17605 | mol% |
| Hydrogen Sulfide | 0.354 | mol% | Hydrogen Sulfide | 0.00483 | mol% |
| Nitrogen | 0.00940 | mol% | Nitrogen | 0.00820 | mol% |
| Methane | 2.0149 | mol% | Methane | 9.80494 | mol% |
| Ethane | 0.3716 | mol% | Ethane | 14.09657 | mol% |
| Propane | 0.1227 | mol% | Propane | 18.96782 | mol% |
| i-Butane | 0.0098 | mol% | i-Butane | 2.56932 | mol% |
| n-Butane | 0.02933 | mol% | n-Butane | 9.91378 | mol% |
| i-Pentane | 0.00224 | mol% | i-Pentane | 3.61200 | mol% |
| n-Pentane | 0.00300 | mol% | n-Pentane | 4.83441 | mol% |
| Hexane | 0.0007231 | mol% | Hexane | 3.17734 | mol% |
| Heptane | 0.000088 | mol% | Heptane | 1.60118 | mol% |
| Cyclopentane | 0.000665 | mol% | Cyclopentane | 1.96478 | mol% |
| Cyclohexane | 0.000743 | mol% | Cyclohexane | 1.87261 | mol% |
| Methylcyclohexane | 0.000133 | mol% | Methylcyclohexane | 1.01041 | mol% |
| 2,2,4-Trimethylpentane | 0.000006 | mol% | 2,2,4-Trimethylpentane | 0.09706 | mol% |
| n-Octane | 0.0000054 | mol% | n-Octane | 0.13357 | mol% |
| Water | 8.32375 | mol% | Water | 12.72109 | mol% |
| Benzene | 0.01188 | mol% | Benzene | 8.93524 | mol% |
| Toluene | 0.00250 | mol% | Toluene | 3.43888 | mol% |
| Ethylbenzene | 0.00026 | mol% | Ethylbenzene | 0.61876 | mol% |
| p-Xylene | 0.00000 | mol% | m-Xylene | 0.00000 | mol% |
| o-Xylene | 0.00018 | mol% | o-Xylene | 0.43941 | mol% |

**Location:**

| | | |
|---|---|---|
| Site Elevation | 3070 | FASL |
| Max Ambient | 105 | F |
| Min Ambient | 0 | F |
| Wind Speed | 100 | mph |

**Notes:**

1. Above information is applicable to the request for quote for a Thermal Oxidizer.
2. Unit to achieve best destruction efficiency possible, 99% minimum if possible
3. Unit to be designed with two separate connections; one connection to be designated for the amine acid gas stream and one connection to be designated for the glycol system OVHD stream
4. Amine Acid Gas Stream is the amine OVHD gas combined with the Amine Flash Gas, to increase the heating value
5. Fuel gas is avaliable
6. Excess capacity of 10% requested

**Zeeco has considered that the Amine Flash Gas and Amine OVHD Gas will be introduced to the unit on separate connections. While the above composition does not cause a combustion instability problem, injecting the Flash Gas and OVHD Gas together can cause combustion instability during start-up or process upset conditions, when the heating value fluctuates. We will be happy to discuss this point in additional detail if necessary. Please contact us.**

### 1.2.2 System Performance @ 1600°F

| Stack Emission | Expected Performance |
|---|---|
| Destruction Efficiency | > 99.9% of all Hydrocarbons |
| NOx, $ppm_{vd}$ @ 3% O2 | 50 |
| CO, $ppm_{vd}$ @ 3% O2 | 50 |

**Note:** These values are understood to apply only when the system is operated in accordance with the above operating conditions and waste(s) stipulated in section 1.2.1 above, and design temperature.

### 1.2.3 Combustion Air Performance

Reference AirPro Fan vendor literature in APPENDIX G for combustion air blower performance curve information.

### 1.2.4 Burner Performance

Reference the burner capacity curve (32339-G009A-001) in APPENDIX D for burner performance information.

## 1.3 Equipment Description

The forced draft thermal oxidizer system is described below.

### 1.3.1 Burner (Reference Zeeco Drawing 32339-G006A-001)

The forced draft burner assembly consists of one (1) GB Series gas burner. The burner is complete with the following features:

- One (1) GB Series (75 MM BTU/HR) forced draft burner with 10:1 fuel gas turndown.
- AR/GS-1 HEI electric spark ignited pilot assembly (85,000 BTU/HR Intermittent Pilot) NOTE: During normal operation, the purge air to cool the pilot must remain on even when pilot is not in operation.
- One (1) 42-3/4” fabricated plate flange burner mounting connection.
- One (1) 4” 150# RFWN fuel gas connection.
- One (1) 2” 150# RFWN glycol vent connection.
- One (1) 1-1/2” 150# RFWN pilot mounting connection.
- One (1) 2” NPS sight port assembly with purge connection.
- Two (2) 2” FNPT swivel scanner mount assemblies with purge connection.
- One (1) 1-1/2” 150# RFWN drain connection w/ blind.
- A-36 carbon steel construction.
- 60% $Al_2O_3$ burner tile, shipped in eight (8) loose segments.
- Paint per Zeeco document 32339-4030 (See APPENDIX E).

### 1.3.2 Thermal Oxidizer (Reference Zeeco Drawing 32339-G064A-001)

The thermal oxidizer design is a vertically fired unit supported by legs, and is designed to operate at 1600 °F. The thermal oxidizer is designed and furnished with the following companion features for the Zeeco burner design:

- Nominal 10’-0” O.D. integral stack x 76’-0” overall height.
- One (1) 42-3/4” fabricated plate flange burner mounting connection
- One (1) 30” 150# RFWN Amine waste gas connection.

- One (1) 40" fabricated plate flange combustion air connection.
- Two (2) 1-1/2" RFWN thermocouple connections.
- Two (2) 4" RFWN sample connections w/ blind.
- One (1) 4" RFWN $O_2$ analyzer connection.
- One (1) 4" sight port connection w/ purge and blast gate.
- Two (2) 2" RFWN spare scanner connections w/ blind.
- One (1) 1-1/2" RFWN drain connection w/ blind.
- One (1) 36" fabricated plate flange manway w/ davit.
- A-36 carbon steel shell with 1/8" corrosion allowance.
- Two (2) lifting trunnions for use with spreader beam and tailing lug.
- One (1) lot of ladders & platforms consisting of two (2) service platforms and one (1) step off platform. Ladders & platforms are trial fit in the shop, then shipped loose to prevent damage. All safety gates are the same size and interchangeable.
- Shop fit stack strakes (shipped loose to prevent damage)
- Shop installed castable refractory lining dried out to 500 °F.
- One (1) lot of rainshield material (shipped loose to prevent damage)
- One (1) 304SS leg mounted grounding lug.
- Paint per Zeeco document 32339-4030 (See APPENDIX E).

### 1.3.3 Refractory Lining (Reference Zeeco Drawing 32339-R064A-001)

The refractory supplied includes insulating castable and medium weight castable. The castable refractory is held in place using 310 stainless steel anchors located on 9" centers. Refractory anchors and castable are shop installed and dried to 500°F.

<u>Thermal Oxidizer Floor</u>
4" thick 3000 °F, medium weight castable, backed with 2" thick 2300 °F light weight insulating castable with 310 SS Hanlock HL-201-4 (or equal) anchors on 9" centers.

<u>Combustion Zone (First ~ 10' of Thermal Oxidizer Vessel)</u>
4" thick 3000 °F, medium weight castable, backed with 2" thick 2300 °F light weight insulating castable with 310 SS Hanlock HL-201-4 (or equal) 3" tall anchors on 9" centers.

<u>Mixing Zone (Final ~ 51'-9" of Thermal Oxidizer Vessel)</u>
4" thick 2300 °F, light weight insulating castable, with 310 SS Hanlock HL-208-7 (or equal) anchors on 8" centers.

Additional details may be seen in the general arrangement drawings included in APPENDIX D.

### 1.3.4 Instrumentation & Controls

The Zeeco supplied Control System includes all field-mounted instrumentation and valves, along with controls and rack mounted piping for the burner management system (BMS). Interconnecting conduit, wiring, tubing, and piping between the rack and the Thermal Oxidizer is supplied and field installed by others. For more information, please see Zeeco P&ID drawings 32339-04-11001-001 and 32339-04-11001-002 in APPENDIX D.

Zeeco has supplied a Burner Ignition System, one (1) temperature transmitter (TT-5500), five (5) Pressure Gauges (PI-5501A, -5501B, -5502A, -5503A, -5503B), two (2) Flame Scanners (BE/BSL-5501/5502), two (2) thermocouples (TE-5500 & TE-5504), and the burner controls rack. Refer

to the Zeeco Shipping List located in APPENDIX F for reference to shipped loose items. The Zeeco supplied instruments and controls (above) are certified to Class I Div. II Group C & D operation.

The P & ID drawing series is included in APPENDIX D (for the Zeeco supplied controls and instruments) to provide detailed information on the instrumentation and mounting. Detailed instrument specification sheets and selected vendors are included in APPENDIX E (documents) and APPENDIX G (vendors).

### 1.3.5 Combustion Air Blower (Reference AirPro fan drawing in Appendix G)

One (1) Combustion air blower complete with the following features:

- Designed for 23,238 CFM @ 3.5” w.c.
- AirPro Model BIHS290, Arrangement 4 Fan Assembly
- 30 hp., 1760 rpm, 460/60/3 Premium Eff. TEFC Motor
- Silencer w/ bird screen
- Flanged inlet/outlet connections
- Outlet Flex Connector
- Bolted Access Door
- Drain Connection with plug

# Appendix A

Customer Process Data Sheets

# PRIMARY FLARE

BY: GLM | JOB NO: 6353 | PAGE 1 OF 2

DATE: 7/28/2011 | ITEM NO.: FL-991

CUSTOMER: Southcross Energy

PLANT: Woodsboro Plant

SERVICE: PRIMARY FLARE

QUANTITY: 1 SIZE: By Mfgr

SAULSBURY INDUSTRIES

**SAULSBURY Engineering & Construction**

Texas Registered Engineering Firm F-518

Work by Saulsbury Engineering: Rev RFQ

| REV. | DATE | BY | APPR. | NO. | FIRM |
|---|---|---|---|---|---|
| Request for Quotation | 7/29/2011 | GLM | WST | RFQ | SE&C |

| Design Cases | Cold Flare Riser | Warm Flare Riser | |
|---|---|---|---|
| Flow Rate (Lb/Hr) | 392,000 | 180,000 | |
| Controlling Point Sources | PSV-501 | PSV-361,161,162,163 | |
| Molecular Weight | 18-19 | 44 | |
| Temperature, ºF at inlet to Riser | -50 to -100 | +250 | |
| Maximum Pressure at Inlet Nozzle, PSIG | 50 | 50 | |
| Smokeless Operation Required (Yes/No) | | Yes, Note 3 | |
| Lower Heating Value, BTU/SCF | | | |
| Composition (Mol % / Weight %) | | | |
| Nirtogen | | | |
| Carbon Dioxide | | | |
| Methane | 80-85 Mol% | | |
| Ethane | | | |
| Propane | | Essentially 100% | |
| Butanes | | | |
| Pentanes | | | |
| Hexanes Plus | | | |
| Hydrogen | | | |
| Oxygen | | | |
| TOTAL | | | |
| | | | |
| Flare Riser Diameter & Inlet Nozzle Size, Note 2 | 16" | 10" | |
| Max Wind During Flaring Operation, MPH | 30 | 30 | |

Notes
1 ) Elevated, Self-Supported Flare
2 ) Flare will consist of 2 risers with sizes as shown. As an option, vendor may propose different size with rationale.
3) Smokeless Rate - 20% of Warm Flare Rate
4) Features not specifically identified should be similar to the Zeeco SO 17716 or Ref T80793F.
5) Instrument Air available at 85-125 psig.
6) Provide radiation shielding for any JB's, panels, boxes, or other electrical equipment if required to prevent operating temp out of spec during extended release.
7) Supply heavy duty vaneaxial blower air assist, non-overloading two speed TEAO motor and manually adjustable prop.

# PRIMARY FLARE

BY: GLM | JOB NO: 6353 | PAGE 2 OF 2

DATE: 6/1/2011 | ITEM NO.: FL-991

CUSTOMER: Southcross Energy

PLANT: Woodsboro Plant

SERVICE: PRIMARY FLARE

QUANTITY: 1 SIZE: By Mfgr

SAULSBURY INDUSTRIES

**SAULSBURY Engineering & Construction**

Texas Registered Engineering Firm F-518

Work by Saulsbury Engineering: Rev RFQ

| REV. | DATE | BY | APPR. | NO. | FIRM |
|---|---|---|---|---|---|
| Request for Quotation | 7/29/2011 | GLM | WST | RFQ | SE&C |

| | | | |
|---|---|---|---|
| Power Available | 460Vac 3 P 60 Hz | 120 Vac 1 P 60 Hz | |
| Control Power | 120 Vac 1 P 60 Hz | | |
| Electric Classification Area | Class 1, Div 2, Grp C,D, Temp T2B | | |
| Pilot Gas | Pipeline gas, 100 psia | | |
| Utility Gas | Pipeline Gas, 100 psia | | |
| Purge Reduction | Pipeline Gas, 100 psia | | |
| Flare Tip | 304SS | | |
| | | | |
| Maximum Allowable Thermal Radiation, BTU/Hr/SqFt | 1750 - Note 6 | | |
| At Grade, Specify Distance from Flare Base, Ft | 100 | | |
| Stack Support | Self Supported | | |
| Structural Design Wind Velocity, MPH | 100 | | |
| Seismic Zone | 1 | | |
| Flare Knockout Drum | NO | | |
| Design Pressure, PSIG / Temperature, F / Corr Allow | 50 psig | | |
| ASME Code Stamp / National Board Registration | NO | | |
| Ignition Device (Note 8) | FFG | | |
| Enclosure | Class 1 Div 2, Grp C,D, T2B | | |
| Ladder Platforms | No | | |
| Special Instrumentation | Air Assist Flow switch | | |
| | | | |

NOTES:

1) Applicable specifications: NEC NEMA AISC
2) ASME B31.3 Piping and Shell, AWS 1.1 Welding , and ASCE 7-05 Structural specs are required.
3) Use Rosemount 3051 pressure transmitters for all pressure insrumentation, Rosemount as applicable elsewhere.
5) Ignition system: Manual with Automatic relight Pilot status monitors
6) No point on the ground is to receive more than 2000 BTU/hr/sq ft under any condition.
7) Specify freight charges with proposal, and include drawings, schedules and deliveries.
8) FFG = Flame Front Generator type.
9) Direct high energy spark ignition HEI with optical pilot monitoring device.

# Appendix B

Drawings

## ZEECO Drawing List

| Drawing Number | Rev | Description |
|---|---|---|
| | | |
| SC-6349 | 0 | AFDSGA-14/50 Flare Tip Assembly |
| SC-6355 | 3 | General Arrangement |
| SC-6356 | 1 | Loading Data |
| SC-6357 | 1 | Template & Anchor Bolt Drawing |
| SC-6358 s1-6 | 2 | Riser Detail |
| SC-6359 | 0 | Piping Arrangement |
| SC-6360 s1-3 | 0 | Piping Detail |
| WC-3790 s1-4 | 0 | Control Panel Schematic & Assembly |
| WC-3791 | 0 | T/C Junction Box Control Panel Schematic & Assembly |
| WC-3792 | 0 | LMC-3-T/S FFG Ignition Rack Assembly |
| YA-1491 s1-2 | 0 | P & I Diagram |
| | | |
| | | |
| | | |
| | | |
| | | |
| | | |
| | | |
| | | |
| | | |
| | | |
| | | |
| | | |
| | | |

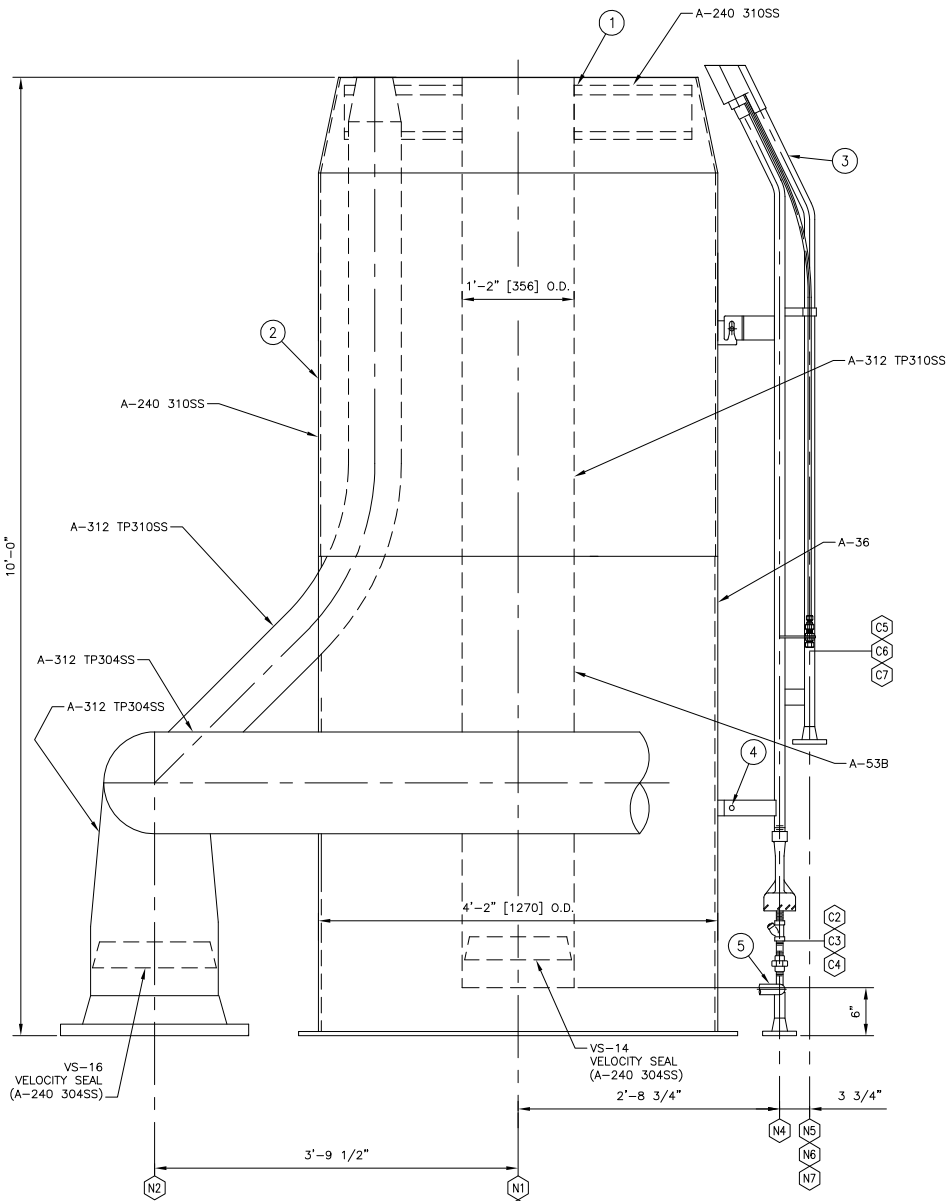


ELEVATION VIEW
(PORTIONS ROTATED FOR CLARITY)

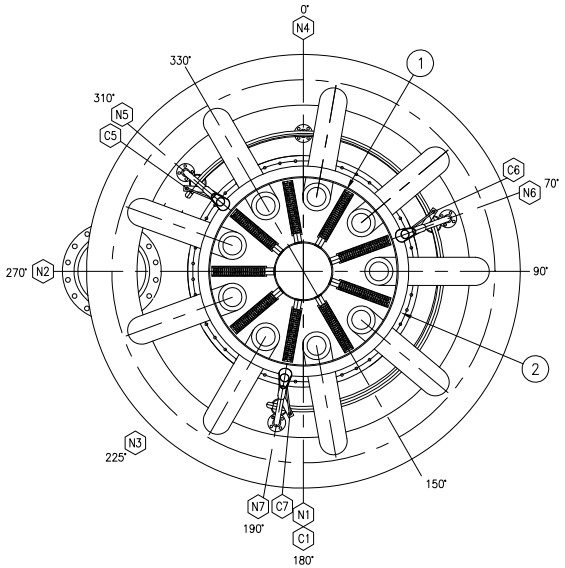


PLAN VIEW
(TRUE ORIENTATION)

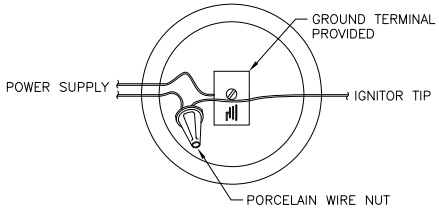


HEI CUSTOMER CONNECTION

## – PARTS LIST –

| ITEM | QTY | DESCRIPTION | PART NO | MATERIAL |
|---|---|---|---|---|
| 1 | 1 | AFDSGA-14/50 CENTER ASS'Y | KC-2207 | 310SS/CS |
| 2 | 1 | AFDSGA-14/50 PLENUM ASS'Y | KC-2208 | 310SS/CS |
| 3 | 3 | HSLF-Z-RT/C PILOT NIPPLE ASSEMBLY | MB-1562 | 310SS |
| | | COMPLETE WITH: | | |
| | | | | |
| | | HSLF-Z MIXER BODY | | A-743 CF3M |
| | | HSLF-Z MIXER SPUD | | F837 18-8 |
| | | PIPE | | A-312 TP316 |
| | | STRAINER W/ PLUG | | A-743 CF8M |
| 4 | 3 | MACHINE BOLT | 1/2"ø X 1 1/4" LG | A-193 B8 |
| | | W/ HEAVY HEX NUT | | A-194 Gr 8 |
| 5 | 1 | PILOT MANIFOLD ASS'Y | KC-2209 | CS |

## – NOTES –

1. PILOT MIXER ORIFICE DRILLED: #55ø [1.32 mm]
2. PILOT GAS CONSUMPTION BASED ON TWO GASES:
   PILOT GAS CONSUMPTION BASED ON SCFH @ [illegible] PER PILOT [illegible]
   PILOT GAS CONSUMPTION BASED ON SCFH @ [illegible] PER PILOT [illegible]
3. PILOT WITHIN BURNER BASED ON TWO GASES:
   BASED ON 500 BTU/SCF [illegible]
   [illegible] GAS [illegible]
   BASED ON RECOVERY GAS 500 BTU/SCF [illegible]
   [illegible] GAS [illegible]
4. THE FLARE TIP REQUIRES A POINT WITHIN A [illegible] SCFH [illegible] AND VARIES [illegible] OF A GAS TRAIN [illegible] TO OPERATING TEMPERATURES.
5. ALL FLANGE BOLTING TO STRADDLE NORMAL CENTERLINES.
6. ALL EXTERNAL CARBON STEEL SURFACES TO BE PREPARED PER SSPC-SP6. PRIME WITH ONE COAT INORGANIC ZINC (2 1/2 MILS DFT MIN.) PAINT ONE COAT HIGH TEMP ALUMINUM (1 MIL DFT MIN.)
7. ALL TESTING PER INSPECTION TEST PLAN DOCUMENT NO. 20238-4010
8. THE PILOT THERMOCOUPLE IS FOR ON/OFF INDICATION ONLY, NOT FOR ACCURATE MEASUREMENT OF THE PILOT FLAME TEMPERATURE.
9. WHEN INSTALLING THE CENTER ASSEMBLY THE GAS EXIT ARMS MUST BE CENTERED ON THE PILOT AS PER THE PLAN VIEW.
10. APPROXIMATE WEIGHT FOR FLARE TIP ASS'Y: 4613 LBS [2092 KG]
11. APPROXIMATE WEIGHT FOR EACH PILOT: 100 LBS [45 KG]

## – NOZZLE LEGEND –

| ITEM | SERVICE | SIZE | RATING | TYPE | SCH/BORE | FLG. MAT'L |
|---|---|---|---|---|---|---|
| N1 | FLARE GAS INLET | 55" O.D. X 1/2" THK. X 50 1/4" I.D. W/ (44) 5/8"ø HOLES ON A 52 1/2" B.C. EQ. SPCD. | | | | A-36 |
| C1 | WARM GAS INLET | 14" | N/A | BW | S/10 | A-53B |
| N2 | COLD GAS INLET | 16" | 150# | RFWN | S/10S | A-182 F304 |
| N4 | PILOT MANIFOLD GAS INLET | 1" | 150# | RFWN | S/40 | A-105 |
| N5-N7 | IGNITION GAS INLET | 1" | 150# | RFWN | S/40 | A-182 F310 |
| C2-C4 | PILOT GAS INLET | 1/2" | N/A | FNPT | N/A | CF8M |
| C5-C7 | T/C GUIDE TUBE | 1/2" | N/A | TUBE | N/A | N/A |

| NO. | DATE | REVISION DESCRIPTION | BY | CKD. | APP. |
|---|---|---|---|---|---|
| 0 | 23AUG11 | ISSUED FOR APPROVAL | | | KAL |

JOBSITE: SOUTHCROSS, TX
END USER: ENOGEX
S.O. NO.: 20238 | P.O. NO.: 6353-004 | APP SKS

ZEECO, INC.
22151 EAST 91st STREET
BROKEN ARROW, OK 74014
PHONE: (918) 258-8551
FAX: (918) 251-5519
www.zeeco.com
sales@zeeco.com

PROPRIETARY DATA IS INCLUDED IN THE INFORMATION DISCLOSED HEREIN AND IS THE PROPERTY OF ZEECO,INC. THIS INFORMATION IS SUBMITTED IN CONFIDENCE AND MUST BE USED IN CONNECTION WITH WORK DONE FOR ZEECO, INC. AND ALL RIGHTS OF DESIGN OR INVENTION ARE RESERVED. UNAUTHORIZED DISCLOSURE OR USE IS PROHIBITED BY LAW.

AFDSGA-14/50 FLARE TIP ASSEMBLY
(TAG: FL-991)

FOR: SE & C

| | |
|---|---|
| DRAWN | DATE 23AUG11 |
| CHK | APP KAL |
| SCALE NONE | REV 0 |
| DRAWING NUMBER | B-SC-6349 SHT. 1 OF 1 |

Kristin R. Long 8/24/2011 11:29:27 AM Q:\Job-Information\Flares\20000\20238 Salisbury Engineering\Drafting\Customer\SC-6349-S1R0.dwg KAL 8/24/2011 9:39:37 AM

Saulsbury Industries
SAULSBURY Corporate Office: 2951 E Interstate 20, Odessa, TX 79766 · P: 432-366-3686 · F: 432-368-0061

# 10231: Lucid Energy – Road Runner Flare Study

**Background**

The purpose of the flare and relief valve study performed by Saulsbury Industries was to evaluate the hydraulics in both the main flare header system and the inlet/outlet piping on the individual relief devices. Several different scenarios were considered when evaluating the flare header system hydraulics and flare stack/tip specifications for maximum relieving loads. Some of these scenarios include, but are not limited to:

- Point-source failure of an instrument or controller (i.e. control valve failure into 100% open position)
- External pool fire around an area containing single or multiple pieces of equipment whose relief valves discharge into the flare header. Per API 521 guidelines, a fire circle area of 2500 $ft^2$ was used to determine which pieces of equipment could be subjected to a common pool fire.
- Blocked-in flow of single or multiple pieces of rotating equipment, causing the equipment to deadhead and reach the designated relieving pressure.
- Heat exchanger tube rupture
- Process control vents to flare, whose purpose is to provide "pre-relief" on equipment before a relief valve opens during operating pressure upsets.

The flare system consists of both a carbon steel "warm" flare header and a stainless steel "cold" flare header. Each of these individual flare headers are routed to dedicated flare risers on the main flare stack, where they are combined into a single flare-tip at the top of the stack. The stainless steel flare header is designed to collect and handle relief valve discharges from the cryo plant area (routed to/from the UOP-provided V-403 Cold Drain Tank). Some relief valves in the cryo plant area have relieving temperatures far below the 0°F minimum temperature limit for standard carbon steel piping and would otherwise potentially result in significant thermal stress or shock if they are routed to the carbon steel "warm" flare header piping. Only relief valves from the cryo plant equipment will be routed into the stainless steel "cold" flare header. All other relief valves in the plant that are routed to flare and have a relieving temperature comfortably above 0°F are discharged into the warm flare header.

The Aspen Flare System Analyzer v10 software was used to evaluate and confirm flare header hydraulics once the location and arrangement of the plant relief devices was known. The software utilizes isothermal compressible flow models to predict pressure drop throughout the flare system, as well as the Peng-Robinson equation of state to approximate outlet temperatures from relief valve discharges based on the composition of the relieving fluid.

**Assumptions**

1) Inlet and outlet piping configurations are an approximation based on information available at the time the flare study was performed. However, small changes in pipe routing/distance will not affect the overall operation of the flare system or adversely affect the reported results.
2) Residue and flash gas compressor blowdown (manual operation) do not discharge into the flare header, and therefore the flare system analysis excludes this scenario.
3) Bypass valves around control valve stations are assumed, via standard plant operating procedures, to be normally closed during plant operation. Inadvertent opening to full 100% trim capacity in these bypass globes valves are not considered.
4) Mach number in sub-headers and main header is limited to 90% of sonic velocity. The exception this is when a "sonic break" occurs during a sudden size change at a tie-point between a relief valve discharge lateral into the larger main flare header or sub-header.
5) Conventional PSV backpressure limit: 10% of PSV set pressure for non-fire scenario
6) Conventional PSV backpressure limit: 21% of PSV set pressure for fire scenario
7) Balanced Bellow PSV backpressure limit: 40% of PSV set pressure
8) Pilot-Operated PSV backpressure limit: 80% of PSV set pressure
9) Relief valve inlet piping pressure drop limit: 3% of PSV set pressure

**Flare Headers**

The carbon steel "warm" flare header/system at the Lucid Energy Road Runner gas plant consists of the following:

- 12" plant flare header up to the warm flare KO drum with the following sub-headers:
    - 8" flare header branch in the mol sieve dehydration area rack
    - 10" flare header branch in refrigeration area rack
    - 12" flare header branch in amine and TEG regeneration area rack
    - 12" flare header branch in stabilizer area rack
- 72" OD x 30'-0" S/S warm flare knockout drum, 100 psig @ 350°F design
- 12" flare header from the warm flare KO drum up to the flare stack inlet

The stainless steel "cold" flare header/system at the Lucid Energy RoadRunner gas plant consists of the following:

- 12" plant flare header up to the cold drain tank
- 54" ID x 30'-0" S/S cold drain tank, 150 psig @ 150/-200°F design
- 14" flare header from the cold drain tank to the flare stack inlet

**Flare Stack/Tip Design**

The flare tip is an air-assisted, sonic-tip flare that contains two, staged vane-axial blowers that allow the flare to achieve smokeless combustion for all relieving flow rates at 20% or less of the maximum design case outlined in the flare datasheet. The sonic-tip flare is designed to take as much pressure drop at the tip as possible because this not only improves performance, it also increases longevity of the tip itself. The reasoning behind this is that at a higher pressure, and thus higher exit velocity, the flame is more erect and does not lean on the tip and create a hot spot, which over time could cause failure. In addition to improved lifespan, the smokeless performance of the flare is aided by the higher exit velocity – so at full flow rates the flare will likely be 100% smokeless because the air mixes in better at the tip than it would if the flare gas was exiting at lower velocities. By sizing the flare to take the max pressure drop allowable, the flare riser piping is smaller, the tip is smaller and this leads to a more economical flare system.

Each flare riser also contains a velocity seal to reduce the amount of purge gas required to prevent oxygen intrusion into the flare header systems. Furthermore, each dead-leg in the overall plant flare header system contains a purge gas connection at the very end of these headers to ensure that all areas of the flare header maintain a constant sweep and positive pressure.

The flare contains a variable-speed vane axial blower (150 HP) operating on a VFD, where the blower speed ramps up and down depending on the flare gas header flow rate that is present. The blower on the flare is mostly required for lower flowrates where the velocity and operating pressure of the relieving fluids in the flare stack are much lower than the maximum relieving cases by which the tip and flare system were designed for. During these lower flow rate scenarios, much less air is induced by turbulent mixing at the flare tip due to the low pressure drop at the tip, and therefore the blower is needed to help keep the flare smokeless at reduced rates. The blower speed, and thus air flow capacity is controlled via flare header gas pressure vs. air flow control curves provided by Zeeco. These curves relate pressure in the flare gas header to the % Blower VFD that should be applied.

If the event that a simultaneous flaring event should occur in both gas headers (cold and warm flare headers), then the flow rate that is measured in each header is converted into its equivalent %VFD per the charts provided by Zeeco. These percentages are then summed together to give the final applied %VFD.

**Summary of Maximum Flare Relief System Cases**

The attached plant flare datasheet summarizes the maximum flow cases by which the flare stack and blower were sized for. The two controlling cases for the cold flare header were wide-open failure of the JT-valve (327,800 lb/hr flow) and an external pool fire around the NGL Surge Tank (200,756 lb/hr flow). Likewise, the controlling case for the warm flare header was an external fire around the Condensate Surge Tank (364,824 lb/hr flow) one of the Amine Contactor level control valves failure (210,253 lb/hr). The initial main flare header hydraulics was evaluated using these estimated relief loads to determine the required flare header diameters.

The process data identified on the flare stack datasheet was an up-front estimate of expected maximum relieving loads at the time of the flare stack purchase. However, the actual maximum relieving cases/loads that were analysed during detailed design were less than or very close to the capacity loads used to design the flare stack, thus confirming the flare stack and blowers contain adequate capacity to handle all relieving cases in the plant.

The following table is a summary of some of the largest relieving loads into the warm and cold flare headers that were determined during detailed design. The results of all cases that were evaluated will be included in the appendix of this report.

| System | Relieving Case | Relieving Rate |
|---|---|---|
| Warm Flare | FIRE: Mole-Sieve Area | 89,656 lb/hr |
| Warm Flare | FIRE: Amine HMO Heater | 109,693 lb/hr |
| Warm Flare | Fire: Condensate Surge Tank Area | 461,914 lb/hr |
| Warm Flare | Fire: Stabilizer Skid Area | 221,816 lb/hr |
| Warm Flare | OPER: Refrig. Compressor Blocked Flow | 221,526 lb/hr |
| Warm Flare | OPER: LV-1201 (or) LV-1202 Control Failure | 210,253 lb/hr |
| Warm Flare | OPER: Demethanizer Overpressure CV Open | 345,000 lb/hr |
| Cold Flare | OPER: PCV-402B (JT-Valve) Control Failure | 327,800 lb/hr |
| Cold Flare | FIRE: NGL Product Surge Tank | 268,265 lb/hr |
| Cold Flare | FIRE: UOP Process Skids Area | 212,722 lb/hr |

The flare header hydraulics of both main flare headers, all flare sub-headers, and individual relief valve discharge piping laterals were evaluated utilizing all expected relief loads to verify that the backpressure induced by a single or multiple relief valves of various types (conventional, balanced, pilot-operated) would not cause backpressure issues on the operation of the relief valves. Based on the reported flare study results, all sections of the warm and cold flare headers contain adequate hydraulic capacity to handle all of the relief loads from the various emergency scenarios that were evaluated. The flare header diameters and relief valve discharge piping laterals are of adequate diameter to prevent backpressure in the system from building up that would either exceed the backpressure limitations set forth by the relief valve type and/or the design/test pressures of the flare knockout drums, the main flare header piping, and the individual relief valve discharge piping laterals.

The maximum backpressure seen in the cold flare header at the Cold Drain Tank, V-403, occurs during a JT-Valve failure scenario (PCV-402B wide-open) that would overpressure the demethanizer tower. The backpressure at the Cold Drain Tank inlet nozzle is 8 psig, which is well below the 150 psig design pressure of this vessel. Likewise, the maximum backpressure seen in the warm flare header at the Warm Flare KO Drum, V-5000, occurs during a fire near the Condensate Surge Tan. The backpressure at the Warm Flare KO Drum inlet nozzle is 86 psig, which is below the 100 psig design pressure of this vessel.

**Warm and Cold Flare Knockout Drum Performance**

The primary and critical function of the flare knockout drums on the cold and warm flare headers is to separate and remove any incoming liquid streams in the flare header that are present during relieving events or if condensation occurs in the flare header during cold ambient temperatures. The main flare headers and all plant sub-headers contain a slope of 1” per 100 ft to ensure that the main headers remain devoid of liquid inventory that would cause liquid slugs and/or water hammer during high-load relieving events.

Per API 521, flare knockout drums are sized to remove a maximum droplet size of between 300-600 microns from the incoming fluid stream to prevent large quantities of liquid carryover to the flare tack/tip in the form of liquid droplets. Utilizing the terminal liquid velocity and horizontal gas flowing velocity equations outlined in API 521 and the GPSA Engineering databook, the attached results indicate that both the Warm Flare KO Drum, V-5000, and the Cold Drain Tank, V-403, are sufficiently sized to achieve separation of liquid droplets below the 600 micron limit established by API 521.

When the Warm Flare KO Drum contains a liquid level above its secondary high level switch alarm point (67% full), the vessel is still capable of removing 300 micron and larger diameter liquid droplets from the incoming fluid stream. The incoming fluid streams that were analysed for the liquid level vs. droplet removal for the Warm Flare KO Drum were the 364,824 lb/hr relieving flow created during an external fire near the Condensate Surge Tank. When the Cold Drain Tank contains a liquid level above its high level alarm point (67% full), the vessel is still capable of removing 500 micron and larger diameter liquid

droplets from the incoming fluid stream. The incoming fluid stream that was analysed for the liquid level vs. droplet removal for the Warm Flare KO Drum was the 327,800 lb/hr relieving flow created during a JT-valve failure.

**Radiation Levels**

During evaluation of the maximum design cases for flaring events, Zeeco was instructed to design the height of the flare to be such that a maximum radiation exposure level of 1,750 BTU/hr-ft$^2$ would be encountered at a ground-level point 100 feet away from the base of the flare. This specification takes into account a radiation intensity of 250 BTU/hr-ft$^2$ for solar radiation, and 1,500 BTU/hr-ft$^2$ radiation intensity for combustion at the flare tip during maximum relieving scenarios.

Based on the attached radiation isopleths supplied by Zeeco, there will be no relieving cases where radiation intensity in excess of 1,750 BTU/hr-ft$^2$ will be encountered at any point further than 100 feet away from the flare stack. Since the nearest piece of equipment to the flare stack is ~200 feet away (flare flow meters and platform), the radiation isopleths indicate that excessive radiation exposure will not be encountered during normal maintenance and routine operator rounds, with exception to inspecting the blower at the base of the flare.

# Appendix A: Flare Design Basis

# FLARE

| | | | |
|---|---|---|---|
| BY: | EMG | JOB NO: 10231 | PAGE 1 OF 2 |
| DATE: | 5/3/2017 | ITEM NO.: | FL-5100 FLARE |
| CUSTOMER: | Lucid Energy | | |
| PLANT: | Roadrunner | | |
| SERVICE: | Flare | | |
| QUANTITY: | 1 | SIZE: | 4' - 10" DIA X 100' - 0" OAH |

SAULSBURY INDUSTRIES

Texas Registered Engineering Firm F-518

Work by Saulsbury Engineering: REV. 0

| REV. | DATE | BY | APPR. | NO. | FIRM |
|---|---|---|---|---|---|
| Issue for Construction | 5/3/2017 | EMG | DLS | 0 | SI |
| Request for Quotation | 3/7/2017 | EMG | DLS | A | SI |

| Design Cases | Cold Flare Riser (Case #1) | Cold Flare Riser (Case #2) | Warm Flare Riser (Case #1) | Warm Flare Riser (Case #2) |
|---|---|---|---|---|
| Flow Rate (Lb/Hr) | 392,000 | 267,780 | 221,526 | 355,000 |
| Relief Scenario | JT-Valve Failure | Fire - NGL Surge Tank | Refrigeration Comp. Blocked Flow | Condensate Surge Tank & Stabilizer PSVs |
| Controlling Point Sources | PSV-501 | PSV-404 | PSV-161,162,163 | PSV-1301 and Others |
| Molecular Weight | 17.6446 | 38.602 | 44.17 | 50.46 |
| Temperature at Inlet Nozzle, ºF | -127 | 170 | 140 -190 | 255 |
| Pressure at Inlet Nozzle, PSIG | 25 | 15 | 10 | 25 |
| Smokeless Operation Required (Yes/No) | Yes | Yes, Note 3 | Yes, Note 3 | |
| Lower Heating Value, BTU/SCF | 979 | 2039 | 2318 | 2553 |
| Composition (Mol %) | | | | |
| Nitrogen | 0.656% | 0.000% | | 0.023% |
| Carbon Dioxide | 0.021% | 0.077% | | 2.9830% |
| Methane | 89.660% | 0.497% | | 10.210% |
| Ethane | 8.589% | 57.194% | 0.25% | 15.643% |
| Propane | 0.995% | 27.995% | 99.00% | 25.187% |
| i-Butane | 0.031% | 3.312% | 0.75% | 6.070% |
| n-Butane | 0.043% | 7.146% | | 17.287% |
| i-Pentane | 0.002% | 1.423% | | 6.200% |
| n-Pentane | 0.001% | 1.438% | | 7.288% |
| Hexane | 0.000% | 0.510% | | 5.938% |
| Heptane | 0.000% | 0.142% | | 2.254% |
| Benzene | 0.000% | 0.038% | | 0.425% |
| Toluene | 0.000% | 0.009% | | 0.193% |
| O-Xylene | 0.000% | 0.001% | | 0.037% |
| P-Xylene | 0.000% | 0.000% | | 0.000% |
| Octanes+ | 0.000% | 0.008% | | 0.2522% |
| Water | 0.000% | 0.000% | | 0.000% |
| Hydrogren Sulfide | 0.000045% | 0.00032% | | 0.0098% |
| Flare Riser Diameter & Inlet Nozzle Size, Note 2 | By Vendor | | By Vendor | |
| Radiation Design Parameters: Temp, F / Wind, MPH | 90 / 30 | | 90 / 30 | |

Notes
1) Elevated, self-supported flare.
2) Vendor to propose optimum size of two risers
3) Smokeless rate is 20% of the warm flare design rate.
4) Flare shall be of one-piece lift/erection design for site installation.
5) Instrument air available at 85 to 125 psig.
6) Provide radiation shielding for any JB's, panels, boxes, or other electrical equipment if required to prevent operating temperature out of spec during extended release.
7) Supply heavy duty vaneaxial blower for air assist with VFD control.
8) Pressure at flare base for majority of other cases will be 5 psig or less.

# FLARE

| | | | | | | |
|---|---|---|---|---|---|---|
| BY: | EMG | JOB NO: | 10231 | PAGE | 2 | OF 2 |
| DATE: | 3/7/2017 | ITEM NO.: | FL-5100 FLARE | | | |
| CUSTOMER: | Lucid Energy | | | | | |
| PLANT: | Roadrunner | | | | | |
| SERVICE: | Flare | | | | | |
| QUANTITY: | 1 | SIZE: | * | | | |

SAULSBURY INDUSTRIES

Texas Registered Engineering Firm F-518

Work by Saulsbury Engineering: REV. 0

| | | | |
|---|---|---|---|
| Power Available | 460Vac 3 P 60 Hz | | |
| Control Power | 120 Vac 1 P 60 Hz | | |
| Electric Classification Area | Class 1, Div 2, Grp C,D, Temp T2B | | |
| Pilot Gas | Pipeline gas, 100 psia | | |
| Utility Gas | Pipeline Gas, 100 psia | | |
| Purge Reduction | Pipeline Gas, 100 psia | | |
| Flare Tip | By Vendor | | |
| | | | |
| Maximum Allowable Thermal Radiation, BTU/Hr/SqFt | 1750 - Note 6 | | |
| At Grade, Specify Distance from Flare Base, Ft | 100 | | |
| Stack Support | Self Supported | | |
| Structural Design Wind Velocity, MPH | 120 | | |
| Seismic Zone | 1 | | |
| Flare Knockout Drum | Supplied by Others | | |
| Design Pressure, PSIG / Temperature, F / MDMT, F | 50 / 350 / -150 | | |
| ASME Code Stamp / National Board Registration | No | | |
| Ignition Device | HEI | | |
| Enclosure | Class 1 Div 2, Grp C,D, T2B | | |
| Ladder Platforms | No | | |
| Special Instrumentation | Air Assist Flow switch | | |
| | | | |

Notes:
1) Applicable specifications: NEC NEMA AISC
2) Specifications: Piping - ASME B31.3; Welding - AWS 1.1; Structural - ASCE 7-05 / ASME STS-1-2011
3) Use pressure transmitters for all pressure instrumentation.
4) Ignition system: Manual with automatic re-light; provide temperature or optical pilot monitoring
5) Ignition device: HEI - high energy spark ignition; FFG - flame front generator
6) General documentation to include general arrangement drawings, detail flare stack drawings, ASME STS-1-2011 analysis and required foundation loads.
7) Preferred base design is a base plate, top plate and intermediate gussets.

# Process Conditions -- English Units

| | | | | | |
|---|---|---|---|---|---|
| Client: | Saulsbury | Zeeco Ref.: 2017-01312FL-01 | | Date: | 16-Mar-17 |
| Location: | Loving, NM | Client Ref.: 0 | | Rev. | 0 |

| | Mol % | | | | | |
|---|---|---|---|---|---|---|
| | Cold Case 1 | Cold Case 2 | Warm Case 1 | Warm Case 2 | Case K | Case L |
| METHANE | 89.66 | 0.50 | | 10.21 | | |
| ETHANE | 8.59 | 57.19 | 0.25 | 15.64 | | |
| PROPANE | 1.00 | 28.00 | 99.00 | 25.19 | | |
| BUTANE | 0.07 | 10.46 | 0.75 | 25.36 | | |
| PENTANE | 0.00 | 2.86 | | 13.49 | | |
| HEXANE | | 0.51 | | 5.94 | | |
| HEPTANE | | 0.14 | | 2.25 | | |
| OCTANE | | 0.01 | | 0.25 | | |
| NONANE | | | | | | |
| DECANE | | | | | | |
| DODECANE | | | | | | |
| TRIDECANE | | | | | | |
| CYCLOPENTANE | | | | | | |
| ETHYLENE | | | | | | |
| PROPYLENE | | | | | | |
| BUTYLENE | | | | | | |
| ACETYLENE | | | | | | |
| BENZENE | | 0.04 | | 0.43 | | |
| TOLUENE | | 0.01 | | 0.19 | | |
| XYLENE | | 0.00 | | 0.04 | | |
| CARBON MONOXIDE | | | | | | |
| CARBON DIOXIDE | 0.02 | 0.08 | | 0.98 | | |
| HYDROGEN SULFIDE | | | | 0.01 | | |
| SULFUR DIOXIDE | | | | | | |
| AMMONIA | | | | | | |
| AIR | | | | | | |
| HYDROGEN | | | | | | |
| OXYGEN | | | | | | |
| NITROGEN | 0.66 | | | 0.02 | | |
| WATER | | | | | | |
| BUTADIENE | | | | | | |
| METHANOL | | | | | | |
| **Total** | **100** | **100** | **100** | **100** | | |
| Mol. Wt. | 17.64 | 38.43 | 44.17 | 50.57 | | |
| L. H. V. (BTU/SCF): | 979 | 2,030 | 2,319 | 2,606 | | |
| Temperature (Deg. F): | -127.0 | 170.0 | 190.0 | 255.0 | | |
| Avail. Static Pressure (psig): | 25.00 | 15.00 | 10.00 | 25.00 | | |
| Flow Rate (lbs/hr): | 392,000 | 267,780 | 221,526 | 355,000 | | |
| Smokeless Rate (lbs/hr): | | | | 71,000 | | |

*Confidential and Proprietary*

# Appendix B: Warm and Cold Flare Relieving Scenario Summary Sheets

SAULSBURY INDUSTRIES
2951 EAST INTERSTATE 20, ODESSA, TX 79766
TEXAS REGISTERED ENGINEERING FIRM F-518

# FLARE STUDY

| | | | |
|---|---|---|---|
| JOB NO.: | 10231 | REVISION: | 1 |
| CLIENT: | LUCID ENERGY GROUP | DATE: | 8/30/2017 |
| PROJECT: | ROADRUNNER GAS PLANT | | |
| LOCATION: | EDDY COUNTY, NM | BY: | EMG/APL |

## COLD FLARE RELIEVING SCENARIOS SUMMARY

### FIRE: NGL Product Surge Tank

| PSV | PSV Type | Equipment | Set Pressure (psig) | Size | Required Rate (lb/hr) | PSV Capacity (lb/hr) | Required Orifice ($in^2$) | Installed Orifice ($in^2$) | Inlet Piping DP (psi) | Back Pressure Limit (psig) | Back Pressure at PSV (psig) | Back Pressure at Header (psig) | Back Pressure at KO Drum (psig) | Back Pressure at Flare Base (psig) |
|---|---|---|---|---|---|---|---|---|---|---|---|---|---|---|
| PSV-404 | Pilot | V-404 NGL Product Surge Tank | 400 | 4" P 6" | 268,265 | 301,251 | 6.360 | 6.380 | 1 | 200** | 89 | 46 | 32 | 8.5 |

### FIRE: UOP Process Area

| PSV | PSV Type | Equipment | Set Pressure (psig) | Size | Required Rate (lb/hr) | PSV Capacity (lb/hr) | Required Orifice ($in^2$) | Installed Orifice ($in^2$) | Inlet Piping DP (psi) | Back Pressure Limit (psig) | Back Pressure at PSV (psig) | Back Pressure at Header (psig) | Back Pressure at KO Drum (psig) | Back Pressure at Flare Base (psig) |
|---|---|---|---|---|---|---|---|---|---|---|---|---|---|---|
| PSV-202A | Pilot | E-202 Gas/Product Exchanger | 1100 | 2" J 3" | 10,000 | 189,012 | 0.145 | 1.287 | 0.005 | 200** | 36 | 34 | 20 | 5 |
| PSV-202B | Balanced | E-202 Gas/Product Exchanger | 1440 | 1" D 1" | 4,888 | 32,780 | 0.034 | 0.110 | 0.751 | 200** | 35 | 34 | 20 | 5 |
| PSV-206 | Pilot | E-206 Reflux Condenser | 1100 | 1" F 2" | 28,804 | 31,852 | 0.296 | 0.307 | 5.589 | 200** | 100 | 30 | 20 | 5 |
| PSV-203 | Pilot | E-203 Chiller | 270 | 4" N 6" | 83,326 | 157,460 | 2.153 | 4.340 | 0.016 | 200** | 40 | 34 | 20 | 5 |
| PSV-402 | Pilot | V-402 Cold Separator | 1100 | 2" J 3" | 85,704 | 156,018 | 0.947 | 1.287 | 1.208 | 200** | 120 | 32 | 20 | 5 |

**Note: Backpressure limit set by design pressure of PSV discharge piping lateral

### OPER: PCV-402B (JT-Valve) Control Valve Failure

| PSV | PSV Type | Equipment | Set Pressure (psig) | Size | Required Rate (lb/hr) | PSV Capacity (lb/hr) | Required Orifice ($in^2$) | Installed Orifice ($in^2$) | Inlet Piping DP (psi) | Back Pressure Limit (psig) | Back Pressure at PSV (psig) | Back Pressure at Header (psig) | Back Pressure at KO Drum (psig) | Back Pressure at Flare Base (psig) |
|---|---|---|---|---|---|---|---|---|---|---|---|---|---|---|
| PSV-501 | Pilot | T-501 Demethanizer | 400 | 6" Q 8" | 327,800 | 349,749 | 11.500 | 12.270 | 0.23 | 200** | 29 | 20 | 8 | 2 |

**Note: Backpressure limit set by design pressure of PSV discharge piping lateral

### OPER: E-203 Tube Rupture

| PSV | PSV Type | Equipment | Set Pressure (psig) | Size | Required Rate (lb/hr) | PSV Capacity (lb/hr) | Required Orifice ($in^2$) | Installed Orifice ($in^2$) | Inlet Piping DP (psi) | Back Pressure Limit (psig) | Back Pressure at PSV (psig) | Back Pressure at Header (psig) | Back Pressure at KO Drum (psig) | Back Pressure at Flare Base (psig) |
|---|---|---|---|---|---|---|---|---|---|---|---|---|---|---|
| PSV-203 | Pilot | E-203 Chiller | 270 | 4" N 6" | 88,033 | 89,267 | 4.280 | 4.340 | 0.047 | 200** | 31 | 9 | 5 | 0.6 |

**Note: Backpressure limit set by design pressure of PSV discharge piping lateral

### OPER: E-202 Tube Rupture

| PSV | PSV Type | Equipment | Set Pressure (psig) | Size | Required Rate (lb/hr) | PSV Capacity (lb/hr) | Required Orifice ($in^2$) | Installed Orifice ($in^2$) | Inlet Piping DP (psi) | Back Pressure Limit (psig) | Back Pressure at PSV (psig) | Back Pressure at Header (psig) | Back Pressure at KO Drum (psig) | Back Pressure at Flare Base (psig) |
|---|---|---|---|---|---|---|---|---|---|---|---|---|---|---|
| PSV-202A | Pilot | E-202 Gas/Product Exchanger | 1100 | 2" J 3" | 87,224 | 91,044 | 1.233 | 1.287 | 0.574 | 200** | 108 | 38 | 1 | 0.3 |

**Note: Backpressure limit set by design pressure of PSV discharge piping lateral

SAULSBURY INDUSTRIES
2951 EAST INTERSTATE 20, ODESSA, TX 79766
TEXAS REGISTERED ENGINEERING FIRM F-518

# FLARE STUDY

| | | | |
|---|---|---|---|
| JOB NO.: | 10231 | REVISION: | 1 |
| CLIENT: | LUCID ENERGY GROUP | DATE: | |
| PROJECT: | ROAD RUNNER 200MMSCD CRYO | | |
| LOCATION: | EDDY COUNTY, NM | BY: | APL/EMG |

## WARM FLARE RELIEVING SCENARIOS SUMMARY - FIRE CASES

### FIRE: Refrigeration Area

| PSV | PSV Type | Equipment | Set Pressure (psig) | Size | Required Rate (lb/hr) | PSV Capacity (lb/hr) | Required Orifice ($in^2$) | Installed Orifice ($in^2$) | Inlet Piping DP (psi) | Back Pressure Limit (psig) | Back Pressure at PSV (psig) | Back Pressure at Header (psig) | Back Pressure at KO Drum (psig) | Back Pressure at Flare Base (psig) |
|---|---|---|---|---|---|---|---|---|---|---|---|---|---|---|
| PSV-462 | Pilot | V-462 Refrigerant Economizer | 270 | 1.5" F 2" | 6,313 | 10,486 | 0.185 | 0.307 | 4.175 | 200** | 10 | 6 | 4 | 0.7 |
| PSV-463 | Pilot | V-463 Refrigerant Accumulator | 325 | 3" K 4" | 44,846 | 65,617 | 1.256 | 1.838 | 1.728 | 200** | 43 | 7 | 4 | 0.7 |

**Note: Backpressure limit set by design pressure of PSV discharge piping lateral

### FIRE: Mole-Sieve Area

| PSV | PSV Type | Equipment | Set Pressure (psig) | Size | Required Rate (lb/hr) | PSV Capacity (lb/hr) | Required Orifice ($in^2$) | Installed Orifice ($in^2$) | Inlet Piping DP (psi) | Back Pressure Limit (psig) | Back Pressure at PSV (psig) | Back Pressure at Header (psig) | Back Pressure at KO Drum (psig) | Back Pressure at Flare Base (psig) |
|---|---|---|---|---|---|---|---|---|---|---|---|---|---|---|
| PSV-441 | Conv. | F-441 Inlet Filter Coalescer | 1100 | 1" D 1" | 8,628 | 8,768 | 0.123 | 0.125 | 10.267 | 231 | 262 | 157 | 13 | 2.9 |
| PSV-442 | Balanced | V-442 Mole Sieve Dehydrator | 1095 | 1.5" G 3" | 23,891 | 29,672 | 0.405 | 0.503 | 4.975 | 200** | 36 | 29 | 13 | 2.9 |
| PSV-443 | Balanced | V-443 Mole Sieve Dehydrator | 1095 | 1.5" G 3" | 23,891 | 29,672 | 0.405 | 0.503 | 4.975 | 200** | 37 | 29 | 13 | 2.9 |
| PSV-444 | Balanced | V-444 Mole Sieve Dehydrator | 1095 | 1.5" G 3" | 23,891 | 29,672 | 0.405 | 0.503 | 4.975 | 200** | 36 | 28 | 13 | 2.9 |
| PSV-445 | Conv. | F-445 Mole Sieve Dust Filter | 1100 | 1" D 1" | 3,638 | 7,656 | 0.059 | 0.125 | 0.255 | 231 | 182 | 168 | 13 | 2.9 |
| PSV-446 | Conv. | F-446 Mole Sieve Dust Filter | 1100 | 1" D 1" | 3,638 | 7,656 | 0.059 | 0.125 | 0.255 | 231 | 183 | 166 | 13 | 2.9 |
| PSV-447 | Pilot | V-447 Regen Gas Scrubber | 1100 | 2" J 3" | 2,079 | 84,749 | 0.032 | 1.287 | 10.273 | 260 | 43 | 40 | 13 | 2.9 |

**Note: Backpressure limit set by design pressure of PSV discharge piping lateral

### FIRE: Amine HMO Heater

| PSV | PSV Type | Equipment | Set Pressure (psig) | Size | Required Rate (lb/hr) | PSV Capacity (lb/hr) | Required Orifice ($in^2$) | Installed Orifice ($in^2$) | Inlet Piping DP (psi) | Back Pressure Limit (psig) | Back Pressure at PSV (psig) | Back Pressure at Header (psig) | Back Pressure at KO Drum (psig) | Back Pressure at Flare Base (psig) |
|---|---|---|---|---|---|---|---|---|---|---|---|---|---|---|
| PSV-0801 | Balanced | V-0801 Hot Oil Expansion Tank | 150 | 4" M 6" | 109,693 | 133,496 | 2.958 | 3.6 | 0.039 | 68 | 11 | 7 | 3 | 0.6 |

### FIRE: Cryo HMO Heater

| PSV | PSV Type | Equipment | Set Pressure (psig) | Size | Required Rate (lb/hr) | PSV Capacity (lb/hr) | Required Orifice ($in^2$) | Installed Orifice ($in^2$) | Inlet Piping DP (psi) | Back Pressure Limit (psig) | Back Pressure at PSV (psig) | Back Pressure at Header (psig) | Back Pressure at KO Drum (psig) | Back Pressure at Flare Base (psig) |
|---|---|---|---|---|---|---|---|---|---|---|---|---|---|---|
| PSV-781 | Pilot | H-781 HMO Expansion Tank | 150 | 1.5" H 3" | 29,658 | 39,398 | 0.591 | 0.785 | 3.069 | 150 | 39 | 38 | 1 | 0.2 |

### FIRE: Inlet High Pressure Area

| PSV | PSV Type | Equipment | Set Pressure (psig) | Size | Required Rate (lb/hr) | PSV Capacity (lb/hr) | Required Orifice ($in^2$) | Installed Orifice ($in^2$) | Inlet Piping DP (psi) | Back Pressure Limit (psig) | Back Pressure at PSV (psig) | Back Pressure at Header (psig) | Back Pressure at KO Drum (psig) | Back Pressure at Flare Base (psig) |
|---|---|---|---|---|---|---|---|---|---|---|---|---|---|---|
| PSV-1225 | Pilot | F-1225 Inlet Filter Coalescer | 1100 | 1" E 2" | 21,620 | 21,645 | 0.140 | 0.196 | 0.318 | 200** | 48 | 3 | 1 | 0.1 |

**Note: Backpressure limit set by design pressure of PSV discharge piping lateral

SAULSBURY INDUSTRIES
2951 EAST INTERSTATE 20, ODESSA, TX 79766
TEXAS REGISTERED ENGINEERING FIRM F-518

# FLARE STUDY

| | | | |
|---|---|---|---|
| JOB NO.: | 10231 | REVISION: | 1 |
| CLIENT: | LUCID ENERGY GROUP | DATE: | |
| PROJECT: | ROAD RUNNER 200MMSCD CRYO | | |
| LOCATION: | EDDY COUNTY, NM | BY: | APL/EMG |

## WARM FLARE RELIEVING SCENARIOS SUMMARY - FIRE CASES

### FIRE: TEG Treating High Pressure Area

| PSV | PSV Type | Equipment | Set Pressure (psig) | Size | Required Rate (lb/hr) | PSV Capacity (lb/hr) | Required Orifice ($in^2$) | Installed Orifice ($in^2$) | Inlet Piping DP (psi) | Back Pressure Limit (psig) | Back Pressure at PSV (psig) | Back Pressure at Header (psig) | Back Pressure at KO Drum (psig) | Back Pressure at Flare Base (psig) |
|---|---|---|---|---|---|---|---|---|---|---|---|---|---|---|
| PSV-1275 | Pilot | F-1275 TEG Filter Coalescer | 1100 | 1" E 2" | 12,771 | 14,034 | 0.161 | 0.196 | 0.464 | 200** | 6 | 3 | 1 | 0.08 |

**Note: Backpressure limit set by design pressure of PSV discharge piping lateral

### FIRE: Condensate Surge Tank

| PSV | PSV Type | Equipment | Set Pressure (psig) | Size | Required Rate (lb/hr) | PSV Capacity (lb/hr) | Required Orifice ($in^2$) | Installed Orifice ($in^2$) | Inlet Piping DP (psi) | Back Pressure Limit (psig) | Back Pressure at PSV (psig) | Back Pressure at Header (psig) | Back Pressure at KO Drum (psig) | Back Pressure at Flare Base (psig) |
|---|---|---|---|---|---|---|---|---|---|---|---|---|---|---|
| PSV-9060 | Pilot | V-9060 Condensate Surge Tank | 325 | 6" R 8" | 364,824 | 291,076 | 12.0137 | 16.000 | 0.26365 | 200** | 181 | 183 | 86 | 84 |
| PSV-1403 | Pilot | V-1403 Off-Spec Condensate Drum | 325 | 2" J 3" | 53,194 | 64,296 | 1.152 | 1.287 | 0.3582 | 200** | 176 | 183 | 86 | 84 |
| PSV-1001A | Pilot | F-1001A Condensate Filter | 1100 | 1" D 2" | 11,223 | 19,219 | 0.051 | 0.110 | 0.12693 | 200** | 184 | 183 | 86 | 84 |
| PSV-1001B | Pilot | F-1001B Condensate Filter | 1100 | 1" D 2" | 11,223 | 19,219 | 0.051 | 0.110 | 0.12693 | 200** | 184 | 183 | 86 | 84 |
| PSV-9501 | Pilot | F-9500 Flash Gas Filter Coalescer | 1200 | 1 1/2" F 2" | 21,450 | 33,568 | 0.2002 | 0.307 | 0.792 | 200** | 186 | 183 | 86 | 84 |

**Note: Backpressure limit set by design pressure of PSV discharge piping lateral

461,914

### FIRE: Stabilizer Area

| PSV | PSV Type | Equipment | Set Pressure (psig) | Size | Required Rate (lb/hr) | PSV Capacity (lb/hr) | Required Orifice ($in^2$) | Installed Orifice ($in^2$) | Inlet Piping DP (psi) | Back Pressure Limit (psig) | Back Pressure at PSV (psig) | Back Pressure at Header (psig) | Back Pressure at KO Drum (psig) | Back Pressure at Flare Base (psig) |
|---|---|---|---|---|---|---|---|---|---|---|---|---|---|---|
| PSV-3101 | Balanced | F-3101 Filter | 325 | 1" D 2" | 5,430 | 7,905 | 0.045 | 0.110 | 3.587 | 100 | 84 | 78 | 38 | 30 |
| PSV-3102 | Balanced | F-3102 Filter | 325 | 1" D 2" | 5,430 | 7,905 | 0.045 | 0.110 | 3.528 | 100 | 84 | 78 | 38 | 30 |
| PSV-3202 | Balanced | T-3202 Deethanizer Tower | 325 | 3" J 4" | 27,268 | 31,730 | 0.942 | 1.287 | 2.180 | 100 | 81 | 78 | 38 | 30 |
| PSV-3201A | Balanced | E-3201 Feed/Bottoms Exchanger | 325 | 1 1/2" F 2" | 28,345 | 22,061 | 0.285 | 0.307 | 2.557 | 100 | 97 | 78 | 38 | 30 |
| PSV-3201B | Balanced | E-3201 Feed/Bottoms Exchanger | 325 | 1 1/2" F 2" | 28,345 | 14,471 | 0.218 | 0.307 | 3.257 | 100 | 85 | 78 | 38 | 30 |
| PSV-3301 | Pilot | T-3301 Stabilizer Tower | 325 | 4" L 6" | 90,664 | 58,064 | 2.612 | 2.853 | 0.883 | 100 | 78 | 81 | 38 | 30 |
| PSV-3702 | Balanced | Stabilizer Feed Separator | 325 | 3" J 4" | 36,333 | 38,586 | 1.231 | 1.287 | 0.699 | 100 | 85 | 78 | 38 | 30 |

**Note: Backpressure limit set by design pressure of PSV discharge piping lateral

### FIRE: Stabilizer HMO Expansion Tank

| PSV | PSV Type | Equipment | Set Pressure (psig) | Size | Required Rate (lb/hr) | PSV Capacity (lb/hr) | Required Orifice ($in^2$) | Installed Orifice ($in^2$) | Inlet Piping DP (psi) | Back Pressure Limit (psig) | Back Pressure at PSV (psig) | Back Pressure at Header (psig) | Back Pressure at KO Drum (psig) | Back Pressure at Flare Base (psig) |
|---|---|---|---|---|---|---|---|---|---|---|---|---|---|---|
| PSV-3501 | Balanced | V-3501 Hot Oil Expansion Tank | 150 | 2" H 3" | 15,617 | 52,715 | 0.563 | 0.785 | 0.839 | 100 | 0.304 | -1.316 | 0.5 | 0.1 |

**Note: Backpressure limit set by design pressure of PSV discharge piping lateral

### FIRE: LPG Surge Tank

SAULSBURY INDUSTRIES
2951 EAST INTERSTATE 20, ODESSA, TX 79766
TEXAS REGISTERED ENGINEERING FIRM F-518

# FLARE STUDY

| | | | |
|---|---|---|---|
| JOB NO.: | 10231 | REVISION: | 1 |
| CLIENT: | LUCID ENERGY GROUP | DATE: | |
| PROJECT: | ROAD RUNNER 200MMSCD CRYO | | |
| LOCATION: | EDDY COUNTY, NM | BY: | APL/EMG |

## WARM FLARE RELIEVING SCENARIOS SUMMARY - FIRE CASES

| PSV | PSV Type | Equipment | Set Pressure (psig) | Size | Required Rate (lb/hr) | PSV Capacity (lb/hr) | Required Orifice ($in^2$) | Installed Orifice ($in^2$) | Inlet Piping DP (psi) | Back Pressure Limit (psig) | Back Pressure at PSV (psig) | Back Pressure at Header (psig) | Back Pressure at KO Drum (psig) | Back Pressure at Flare Base (psig) |
|---|---|---|---|---|---|---|---|---|---|---|---|---|---|---|
| PSV-3801 | Pilot | V-3801 LPG Surge Tank | 325 | 4" L 6" | 88,783 | 105,217 | 2.39 | 2.853 | 1.461 | 100 | 17 | 18.2074 | 6.844 | 5.31 |

**Note: Backpressure limit set by design pressure of PSV discharge piping lateral

## FIRE: Flash Gas Compressors

| PSV | PSV Type | Equipment | Set Pressure (psig) | Size | Required Rate (lb/hr) | PSV Capacity (lb/hr) | Required Orifice ($in^2$) | Installed Orifice ($in^2$) | Inlet Piping DP (psi) | Back Pressure Limit (psig) | Back Pressure at PSV (psig) | Back Pressure at Header (psig) | Back Pressure at KO Drum (psig) | Back Pressure at Flare Base (psig) |
|---|---|---|---|---|---|---|---|---|---|---|---|---|---|---|
| PSV-9300 | Pilot | C-9300 Flash Gas Compressor | 400 | 1 1/2" H 3" | 22,325 | 20,808 | 0.5744 | 0.785 | 0.323 | 100 | 36 | 8.9 | 2.47 | 2 |
| PSV-9400 | Pilot | C-9400 Flash Gas Compressor | 400 | 1 1/2" H 3" | 22,325 | 20,690 | 0.5744 | 0.785 | 0.326 | 100 | 42 | 8.9 | 2.47 | 2 |

**Note: Backpressure limit set by design pressure of PSV discharge piping lateral

SAULSBURY INDUSTRIES
2951 EAST INTERSTATE 20, ODESSA, TX 79766
TEXAS REGISTERED ENGINEERING FIRM F-518

# FLARE STUDY

| | | | |
|---|---|---|---|
| JOB NO.: | 10231 | REVISION: | 0 |
| CLIENT: | LUCID ENERGY GROUP | DATE: | |
| PROJECT: | ROAD RUNNER 200MMSCD CRYO | | |
| LOCATION: | EDDY COUNTY, NM | BY: | APL/EMG |

## WARM FLARE RELIEVING SCENARIOS SUMMARY - OPERATING CASES

### OPER: E-207 Tube Rupture

| PSV | PSV Type | Equipment | Set Pressure (psig) | Size | Required Rate (lb/hr) | PSV Capacity (lb/hr) | Required Orifice ($in^2$) | Installed Orifice ($in^2$) | Inlet Piping DP (psi) | Back Pressure Limit (psig) | Back Pressure at PSV (psig) | Back Pressure at Header (psig) | Back Pressure at KO Drum (psig) | Back Pressure at Flare Base (psig) |
|---|---|---|---|---|---|---|---|---|---|---|---|---|---|---|
| PSV-207 | Pilot | E-207 Trim Reboiler | 150 | 4" P 6" | 68,964 | 70,966 | 6.200 | 6.380 | 1.050 | 120 | 31 | 10 | 7 | 1.4 |

### OPER: Refrigeration Compressor Blocked Flow

| PSV | PSV Type | Equipment | Set Pressure (psig) | Size | Required Rate (lb/hr) | PSV Capacity (lb/hr) | Required Orifice ($in^2$) | Installed Orifice ($in^2$) | Inlet Piping DP (psi) | Back Pressure Limit (psig) | Back Pressure at PSV (psig) | Back Pressure at Header (psig) | Back Pressure at KO Drum (psig) | Back Pressure at Flare Base (psig) |
|---|---|---|---|---|---|---|---|---|---|---|---|---|---|---|
| PSV-161 | Pilot | C-161 Refrigerant Compressor | 325 | 3" L 4" | 73,842 | 79,506 | 2.552 | 2.853 | 1.779 | 200** | 79 | 58 | 39 | 13 |
| PSV-162 | Pilot | C-162 Refrigerant Compressor | 325 | 3" L 4" | 73,842 | 79,506 | 2.552 | 2.853 | 1.913 | 200** | 80 | 60 | 39 | 13 |
| PSV-163 | Pilot | C-163 Refrigerant Compressor | 325 | 3" L 4" | 73,842 | 79,506 | 2.552 | 2.853 | 2.086 | 200** | 75 | 61 | 39 | 13 |

**Note: Backpressure limit set by design pressure of PSV discharge piping lateral

### OPER: LV-1201/1202 Control Valve Failure**

| PSV | PSV Type | Equipment | Set Pressure (psig) | Size | Required Rate (lb/hr) | PSV Capacity (lb/hr) | Required Orifice ($in^2$) | Installed Orifice ($in^2$) | Inlet Piping DP (psi) | Back Pressure Limit (psig) | Back Pressure at PSV (psig) | Back Pressure at Header (psig) | Back Pressure at KO Drum (psig) | Back Pressure at Flare Base (psig) |
|---|---|---|---|---|---|---|---|---|---|---|---|---|---|---|
| PSV-0101 | Pilot | V-0101 Amine Flash Tank | 150 | FB, 6" x 8" | 210,253 | 268,644 | 16.099 | 20.570 | 0.432 | 120 | 91 | 70 | 48 | 18 |

**Note: The sizing scenario only considers one of the Amine Contactor Level Control Valves (LV-1201 OR LV-1202) to fail open, allowing gas blow-by. Accounting for failure of both valves would be considered a double jeopardy scenario and therefore invalid.

### OPER: LV-2701 Control Valve Failure

| PSV | PSV Type | Equipment | Set Pressure (psig) | Size | Required Rate (lb/hr) | PSV Capacity (lb/hr) | Required Orifice ($in^2$) | Installed Orifice ($in^2$) | Inlet Piping DP (psi) | Back Pressure Limit (psig) | Back Pressure at PSV (psig) | Back Pressure at Header (psig) | Back Pressure at KO Drum (psig) | Back Pressure at Flare Base (psig) |
|---|---|---|---|---|---|---|---|---|---|---|---|---|---|---|
| PSV-2101 | Pilot | V-2101 Glycol Flash Separator | 150 | 3" J 4" | 9,675 | 14,781 | 0.936 | 1.287 | 0.108 | 120 | 2.5 | 0.8 | 0.3 | 0.1 |

### OPER: Regen Gas Heater Thermal

| PSV | PSV Type | Equipment | Set Pressure (psig) | Size | Required Rate (lb/hr) | PSV Capacity (lb/hr) | Required Orifice ($in^2$) | Installed Orifice ($in^2$) | Inlet Piping DP (psi) | Back Pressure Limit (psig) | Back Pressure at PSV (psig) | Back Pressure at Header (psig) | Back Pressure at KO Drum (psig) | Back Pressure at Flare Base (psig) |
|---|---|---|---|---|---|---|---|---|---|---|---|---|---|---|
| PSV-741 | Conv. | H-741 Regen Gas Heater | 1095 | 1" D 1" | 6,000 | 6,637 | 0.113 | 0.125 | 5.321 | 110 | 112 | 6.8 | 0.1 | 0.1 |

### OPER: PV-481 Control Valve Failure (Fuel Gas Scrubber Overpressure)

| PSV | PSV Type | Equipment | Set Pressure (psig) | Size | Required Rate (lb/hr) | PSV Capacity (lb/hr) | Required Orifice ($in^2$) | Installed Orifice ($in^2$) | Inlet Piping DP (psi) | Back Pressure Limit (psig) | Back Pressure at PSV (psig) | Back Pressure at Header (psig) | Back Pressure at KO Drum (psig) | Back Pressure at Flare Base (psig) |
|---|---|---|---|---|---|---|---|---|---|---|---|---|---|---|
| PSV-481 | Balanced | V-481 Fuel Gas Scrubber | 265 | 1.5" D 3" | 1,062 | 2,081 | 0.056 | 0.110 | 0.159 | 132 | 1 | 0.1 | 0.1 | 0.1 |

SAULSBURY INDUSTRIES
2951 EAST INTERSTATE 20, ODESSA, TX 79766
TEXAS REGISTERED ENGINEERING FIRM F-518

# FLARE STUDY

| | | | |
|---|---|---|---|
| JOB NO.: | 10231 | REVISION: | 0 |
| CLIENT: | LUCID ENERGY GROUP | DATE: | |
| PROJECT: | ROAD RUNNER 200MMSCD CRYO | | |
| LOCATION: | EDDY COUNTY, NM | BY: | APL/EMG |

## WARM FLARE RELIEVING SCENARIOS SUMMARY - OPERATING CASES

### OPER: A-361 Bay Shutdown

| PSV | PSV Type | Equipment | Set Pressure (psig) | Size | Required Rate (lb/hr) | PSV Capacity (lb/hr) | Required Orifice ($in^2$) | Installed Orifice ($in^2$) | Inlet Piping DP (psi) | Back Pressure Limit (psig) | Back Pressure at PSV (psig) | Back Pressure at Header (psig) | Back Pressure at KO Drum (psig) | Back Pressure at Flare Base (psig) |
|---|---|---|---|---|---|---|---|---|---|---|---|---|---|---|
| 1" Gate Valves | N/A | A-361 Refrigerant Condenser | 230 | 1" GV | 355 | N/A | N/A | N/A | 1.459 | 210 | 114 | 0.1 | 0.1 | 0.1 |

### OPER: V-9060 OH Blocked

| PSV | PSV Type | Equipment | Set Pressure (psig) | Size | Required Rate (lb/hr) | PSV Capacity (lb/hr) | Required Orifice ($in^2$) | Installed Orifice ($in^2$) | Inlet Piping DP (psi) | Back Pressure Limit (psig) | Back Pressure at PSV (psig) | Back Pressure at Header (psig) | Back Pressure at KO Drum (psig) | Back Pressure at Flare Base (psig) |
|---|---|---|---|---|---|---|---|---|---|---|---|---|---|---|
| PV-9060B | N/A | V-9060 Condensate Surge Tank | 275 | 3" bv | 355 | N/A | N/A | N/A | 0.018 | 210 | 114 | 0.1 | 0.1 | 0.1 |

### OPER: Flash Gas Compressors Blocked Flow (Control Failure)

| PSV | PSV Type | Equipment | Set Pressure (psig) | Size | Required Rate (lb/hr) | PSV Capacity (lb/hr) | Required Orifice ($in^2$) | Installed Orifice ($in^2$) | Inlet Piping DP (psi) | Back Pressure Limit (psig) | Back Pressure at PSV (psig) | Back Pressure at Header (psig) | Back Pressure at KO Drum (psig) | Back Pressure at Flare Base (psig) |
|---|---|---|---|---|---|---|---|---|---|---|---|---|---|---|
| PSV-9301 | Pilot | Flash Gas Compressors Header | 400 | 3" K 4" | 54,205 | 31,353 | 1.546 | 1.828 | 0.052 | 320 | 51 | 39.2 | 15.7 | 4.5 |

# Appendix C: Warm and Cold Flare Knockout Drum Sizing Sheets

| | | | | | | | |
|---|---|---|---|---|---|---|---|
| Separator Design | Flare KO Drum | | | | | | |
| Unit | OPER: LV-1201 Control Failure | | | | | | |
| Basis | Highest Individual Flow Plus | | | 0% | Overdesign | | |
| Flow Rates | Gas | 110 | mmscfd | | Vessel ID | 72 | Inch |
| | Oil | 1000 | bpd | | Vessel S/S | 30.000 | Ft |
| | Water | 1000 | bpd | | | | |
| | Total Liq | 2000 | bpd | | | | |
| Operating Pressure | | 48 | psig | | | | |
| Gas Compressibility | | 0.808 | | | | | |
| Gas MW | | 23.0017 | | | | | |
| Gas Temperature | | 90 | F | | | | |
| Bulk Liquid Retention | | 20 | Minutes | | | | |
| Surge Capacity (NLL to HLL) | | 0% | of Design Liquid Capacity including Overdesign | | | | |
| Oil SpGr | | 1.024 | | | | | |
| Liquid Volume (Percentage) | | 67% | | | Liquid Flow | 58.3 | GPM |
| Vessel Crossectional Area | | 28.274 | SqFt | | Bulk Liquid Volume | 1166.7 | Gallons |
| Available Crossectional Area | | 9.331 | SqFt | | Bulk Liquid Volume | 156.0 | CuFt |
| Gas Density | | 0.302 | Lb/CuFt | | Minimum Liquid Area | 5.198 | SqFt |
| Gas Flow | | 277798 | Lb/Hr | | Surge Area Required | 0.000 | SqFt |
| Gas ACFS | | 255.269 | Ft3/Sec at TP | | | | |

| | | | |
|---|---|---|---|
| Droplet Size | 300 | Micron | |
| | 0.0009843 | ft | |
| Gas Viscosity | 0.0134 | cP | |
| <u>Drag Coefficient</u> | | | |
| "X" Axis on Fig 5-19 GPSA | 9.700 | | |
| From Chart, Drag Coef, C | 2.00 | | **Figure 5-19 to determine droplet drag coefficient |
| Drop Terminal Velocity | 2.0998 | ft/s | **Eq. 7-1 GPSA |
| Distance for Droplet to Fall | 23.76 | Inches | |
| Time for Droplet to Fall | 0.94 | Seconds | |
| Gas Horizontal Velocity | 9.03 | ft/s | |
| Horiz. Distance for Gas Travel | 28.00 | ft | **Seam to seam length of vessel minus 2 feet |
| Time for Gas to Travel | 3.10 | Seconds | **This number must be GREATER THAN "time for droplet to fall from mist eliminator" value so gas can fall into liquid phase before reaching the end of the vessel where gas outlet nozzle is located |

If the Horizontal Time Exceeds Vertical Time, Design is met or exceeded.

| | | | | | | |
|---|---|---|---|---|---|---|
| Separator Design | Cold Flare KO Drum | | | | | |
| Unit | OPER: PCV-402B JT-Valve Failure | | | | | |
| Basis | Highest Individual Flow Plus | | | 0% | Overdesign | |
| Flow Rates | Gas | 101.643 | mmscfd | Vessel ID | 54 | Inch |
| | Oil | 1616 | bpd | Vessel S/S | 30.000 | Ft |
| | Water | 0 | bpd | | | |
| | Total Liq | 1616 | bpd | | | |
| Operating Pressure | | 32 | psig | | | |
| Gas Compressibility | | 0.808 | | | | |
| Gas MW | | 18.16 | | | | |
| Gas Temperature | | -88 | F | | | |
| Bulk Liquid Retention | | 24.2 | Minutes | | | |
| Surge Capacity (NLL to HLL) | | 0% | of Design Liquid Capacity including Overdesign | | | |
| Oil SpGr | | 0.537 | | | | |
| Liquid Volume (Percentage) | | 63% | | Liquid Flow | 47.1 | GPM |
| Vessel Crossectional Area | | 15.904 | SqFt | Bulk Liquid Volume | 1140.6 | Gallons |
| Available Crossectional Area | | 5.885 | SqFt | Bulk Liquid Volume | 152.5 | CuFt |
| Gas Density | | 0.263 | Lb/CuFt | Minimum Liquid Area | 5.082 | SqFt |
| Gas Flow | | 202661 | Lb/Hr | Surge Area Required | 0.000 | SqFt |
| Gas ACFS | | 214.197 | Ft3/Sec at TP | | | |

| | | | |
|---|---|---|---|
| Droplet Size | 300 | Micron | |
| | 0.0009843 | ft | |
| Gas Viscosity | 0.012 | cP | |
| <u>Drag Coefficient</u> | | | |
| "X" Axis on Fig 5-19 GPSA | 5.497 | | |
| From Chart, Drag Coef, C | 1.20 | | **Figure 5-19 to determine droplet drag coefficient |
| Drop Terminal Velocity | 2.1020 | ft/s | **Eq. 7-1 GPSA |
| Distance for Droplet to Fall | 18 | Inches | |
| Time for Droplet to Fall | 0.71 | Seconds | |
| Gas Horizontal Velocity | 36.40 | ft/s | |
| Horiz. Distance for Gas Travel | 28.00 | ft | **Seam to seam length of vessel minus 2 feet |
| Time for Gas to Travel | 0.77 | Seconds | **This number must be GREATER THAN "time for droplet to fall from mist eliminator" value so gas can fall into liquid phase before reaching the end of the vessel where gas outlet nozzle is located |

If the Horizontal Time Exceeds Vertical Time, Design is met or exceeded.

# Appendix D: Flare Radiation Isopleths

**Zeeco Ref: SO 31927 Rev. 1**
**Flare Radiation Isopleths**
**Solar Radiation Included = 0 BTU/hr-ft2; Wind Speed = 30 ft/s; Rel. Humidity = 85%**
**Flare Tag No. = FL-5100 ; Operating Case = Cold Case 1**

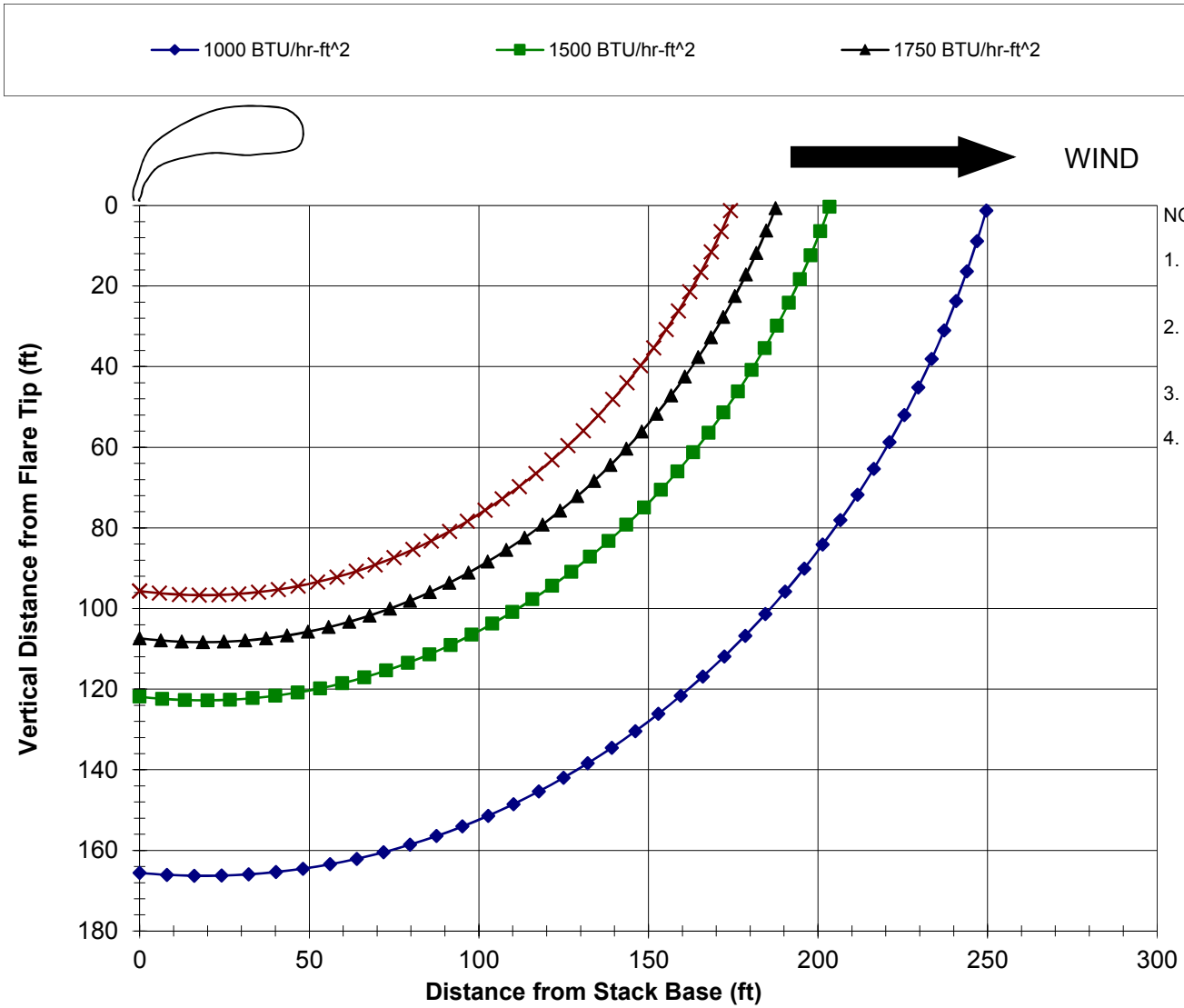


NOTES:

1. Basis: API RP-521, App.'C.3', "Brzustowski & Sommers Method.
2. Calculated radiation is +/-10%, or 100 BTU/hr-ft^2, whichever is larger.
3. Point 0,0 is the exit point of the flare tip.
4. Absorptivity due to relative humidity is included (Tau<1.0)

*Confidential and Proprietary*

**Zeeco Ref: SO 31927 Rev. 1**
**Radiation At Grade Versus Distance From Stack Base**
**Stack Height = 100 ft ; Relative Humidity = 85%**
**Solar Radiation Included = 0 BTU/hr-ft^2 ; Wind Speed = 30 ft/s**
**Flare Tag No. = FL-5100 ; Operating Case = Cold Case 1**

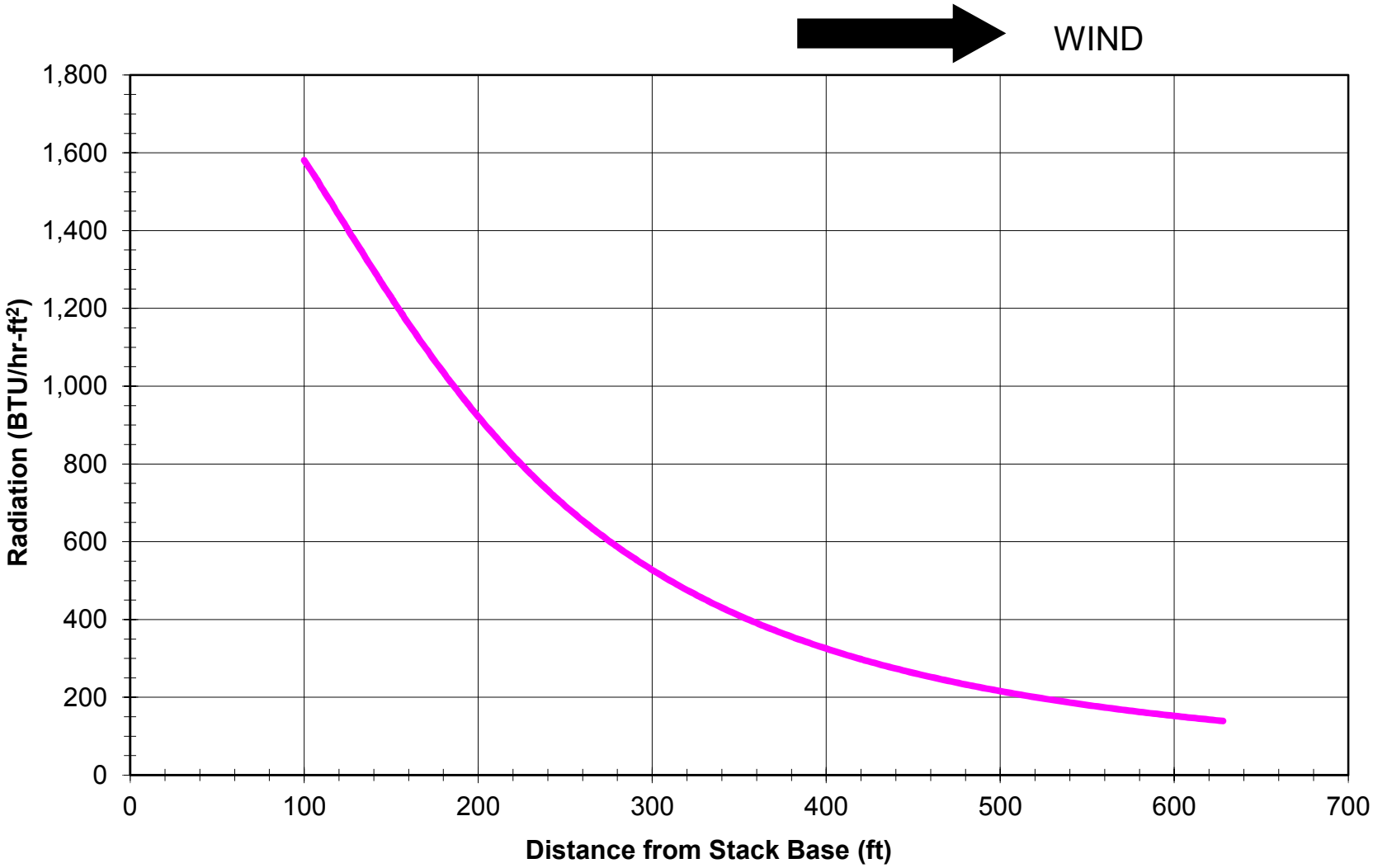


*Confidential and Proprietary*

# Appendix E: Misc. Flare Information

# Air Assisted Flare Tip Specification Sheet

| | | | | | |
|---|---|---|---|---|---|
| Client: | Saulsbury | Zeeco Ref.: | 2017-01312FL-01 | Date: | 16-Mar-17 |
| Location: | Loving, NM | Client Ref.: | 0 | Rev. | 0 |

**General Information:**

| | | | |
|---|---|---|---|
| Tag No.: | FL-5100 | | |
| Model: | AFDSMJ-16-14/58 | Type: | Air-Assisted |
| Length: | 10'- 0 " | | |
| Weight: | 5000 lbs | | |
| No. of Pilots: | 3 | | |

**Design Case:**

| | | |
|---|---|---|
| Governing Case: | Cold Case 1 | |
| Molecular weight: | 17.6 | |
| L. H. V. : | 979 | BTU/SCF |
| Temperature: | -127 | Deg. F |
| Available Static Pressure: | 25.0 | psig |
| Design Flow Rate: | 392,000 | lbs/hr |
| Governing Smokeless Case: | Warm Case 1 | |
| Design Smokeless Rate: | 0 | lbs/hr |
| Approximate Exit Velocity: | 1133 | ft/s |
| Mach No.: | 1.00 | |
| Approx. Tip Press. Drop: | 29.50 | psig |

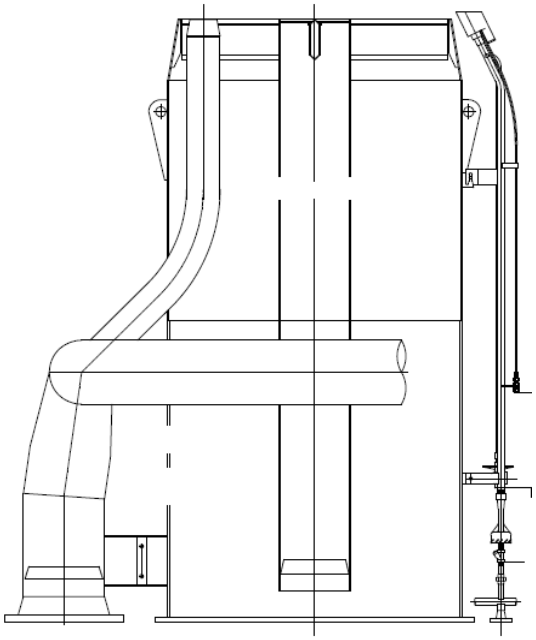

(Typical drawing only)

**Construction:**

| | | | |
|---|---|---|---|
| Upper Section: | 310 SS | Windshield: | YES |
| Lower Section: | Carbon Steel | Flame retention Ring: | 310 SS |
| | | Lifting Lugs: | YES - C.S. Type |

**Surface Finish (Carbon Steel Surfaces):**

| | | | |
|---|---|---|---|
| Surface Preparation: | SSPC-SP6 | Primer: | Inorganic Zinc |
| Paint (c. s. surfaces): | High Heat Aluminum | | |

**Connections:**

| | Qty. | Size | Type | Material |
|---|---|---|---|---|
| N1 - Cold Gas Inlet: | 1 | 16 " | 150# RFWN | 304 SS |
| N2 - Combustion Air Inlet: | 1 | 58 " | Fab. Plate Flange | Carbon Steel |
| N3 - Warm Gas Inlet: | 1 | 14 " | Beveled ; Weld | Carbon Steel |
| N4 - Pilot Gas Manifold: | 1 | 1 " | 150# RFSW | Carbon Steel |

**Miscellaneous Notes:**

1. Includes Integral Purge Reducing Velocity Seal.
2. Warm Flare Required Fuel Gas Purge Rate = 290 SCFH.
3. Cold Flare Required Fuel Gas Purge Rate = 980 SCFH.

Note: Please refer to process conditions for all flare design conditions.

*Confidential and Proprietary*

# Self-supported Flare Stack Specification Sheet

| | | | | | |
|---|---|---|---|---|---|
| Client: | Saulsbury | Zeeco Ref.: | 2017-01312FL-01 | Date: | 16-Mar-17 |
| Location: | Loving, NM | Client Ref.: | 0 | Rev.: | 0 |

**General Information:**

| | |
|---|---|
| Tag No.: | FL-5100 |
| Overall Height: | 100'- 0 " |

**Design Criteria:**

| | | |
|---|---|---|
| Wind Design Code: | ASCE 7-05 | |
| Seismic Design Code: | UBC | |
| Importance Factor: | 1.00 | |
| Structural Design Code: | AISC | |
| Wind Speed (Structural): | 120 | mph |
| Seismic Zone: | 1 | |
| Warm Min/Max. Design Temp: | -20 / 350 | Deg. F |
| Cold Min/Max. Design Temp: | -150 / 350 | Deg. F |
| Design Pressure: | 50 | psig |
| Riser Corrosion Allow.: | 0.063 | in. |

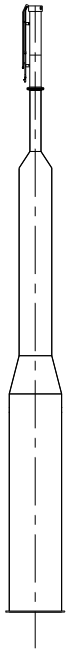

(Typical drawing only)

**Construction:**

| | | | |
|---|---|---|---|
| Air Riser Diameter: | 58" | Ladders & Step-offs: | None |
| Cold Riser Diameter: | 16" | Platform at Tip: | None |
| Warm Riser Diameter: | 14" | Additional Platforms: | None |
| Air / Warm Riser Material: | CS | ACWL: | None |
| Cold Riser Material: | 304 SS | | |

**Surface Finish (Carbon Steel Surfaces):**

| | | | |
|---|---|---|---|
| Surface Preparation: | SSPC-SP-6 | Primer: | Inorganic Zinc |
| Int. Coat: | None | Finish Paint: | None |

**Utility Piping:**

## Per Attached Utility Piping Scope of Supply

**Miscellaneous Notes:**

1. Vane Axial blower mounted at base of stack
2. Blower Power Available: 460 V, 3 Ph, 60 Hz
3. Elevation considered for blower sizing: 3,051 feet. Ambient temp considered: 20 / 100 F
4. See GA attached for duplicate flare system.

*Confidential and Proprietary*

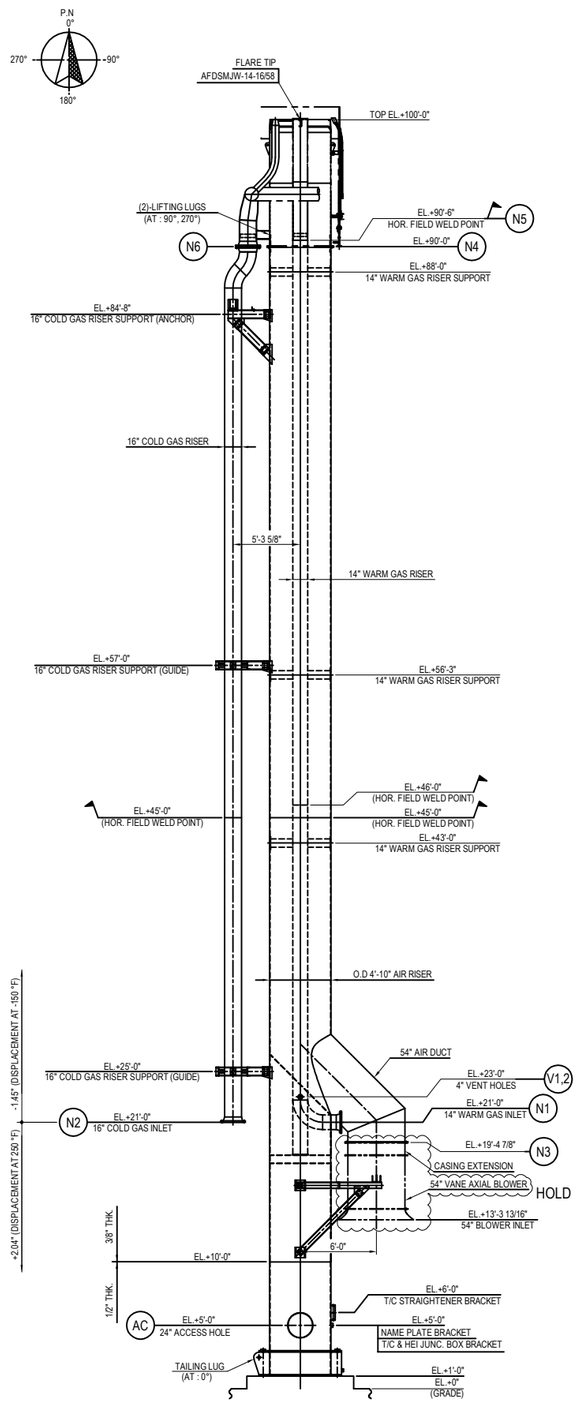


ELEVATION

(*NOT TRUE ORIENTATION)

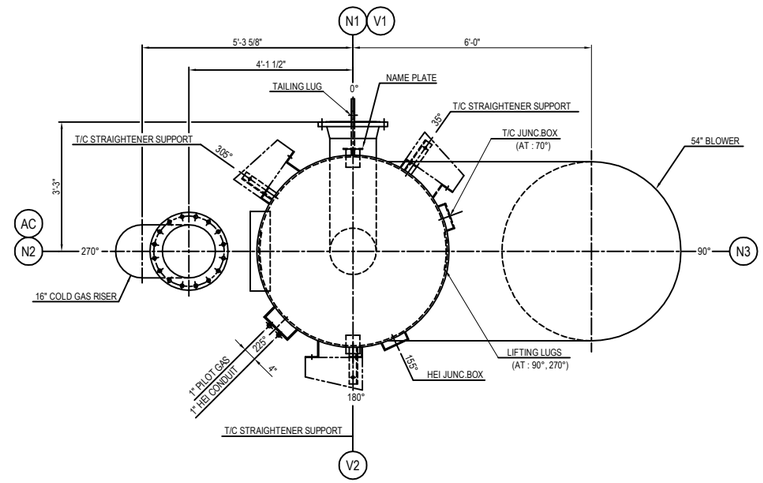


PLAN LAYOUT

| TEMPERATURE | DISPLACEMENT |
|---|---|
| COLD (-150 °F) | 1.45" |
| HOT (250 °F) | 2.04" |

NOZZLE THERMAL DISPLACEMENT

(FOR N2 NOZZLE)

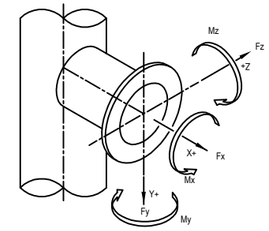


| PIPE SIZE (IN) | Fx | Fy | Fz | Mx | My | Mz |
|---|---|---|---|---|---|---|
| | lb | lb | lb | lb-ft | lb-ft | lb-ft |
| 14 | 315 | 9 | -687 | 2112.3 | 340.0 | 651.9 |
| 16 | 500 | 800 | 800 | 1140 | 850 | 850 |

MAX. ALLOWABLE INLET NOZZLE LOAD

(PER API 537)

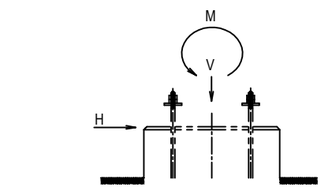


HOLD

| LOADING DATA | V(kip) | H(kip) | M(kip-ft) |
|---|---|---|---|
| DEAD LOAD | 49.1 | - | - |
| WIND LOAD | - | 18.8 | 972.8 |
| SEISMIC LOAD | - | 4.4 | 323.0 |
| NOZZLE LOAD | 1.3 | 2.0 | 42.7 |

LOADING DATA

(FOR STACK RISER)

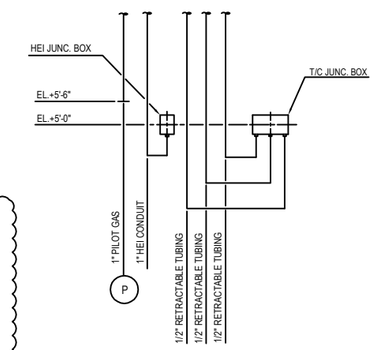


DETAIL OF UTILITY PIPING

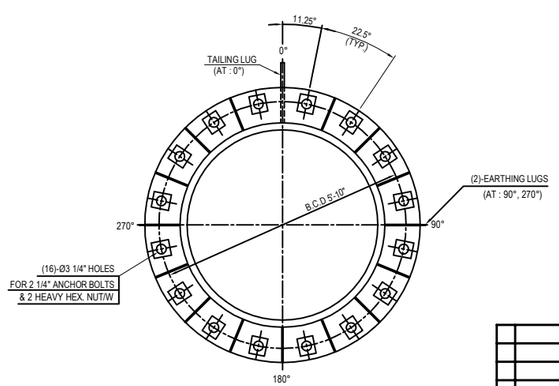


ANCHOR PLAN

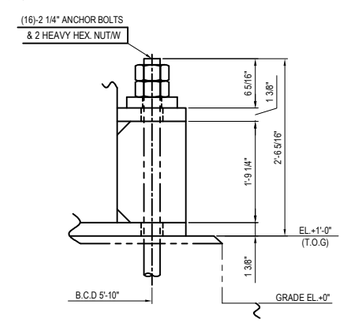


ANCHOR PROJECTION

| MATERIAL SPECIFICATIONS | |
|---|---|
| WARM GAS RISER | A53-B ERW. |
| COLD GAS RISER | A312-TP304 |
| AIR RISER | A36 |
| FLARE TIP | SEE FLARE TIP DWG. |
| WARM GAS RISER FLANGE | A105 |
| COLD GAS RISER FLANGE | A182-F304 |
| AIR RISER FLANGE | A36 |
| RISER GASKET | C4401 |
| BASE PLATE | A36 |
| EARTHING LUG | 304 S.S |
| UTILITY LINE | A106-B |
| CONDUIT | C.S + GALV. |
| RETRACTABLE T/C TUBING | 316L S.S |
| NAME PLATE | 304 S.S |
| NAME PLATE BRACKET | A36 |
| LIFTING LUG | A36 |
| TAILING LUG | A36 |
| STRAIGHTENER SUPPORT | A36 |
| ANCHOR BOLT | A307-C |
| BOLT/NUT (C.S) | A193-B7 / A194-2H |
| BOLT/NUT (S.S) | A320-B8 / A194-8 |

| DESIGN DATA | | | |
|---|---|---|---|
| TYPE | | SELF SUPPORTED | |
| STRUCTURAL DESIGN CODE | | ASME STS-1 / AISC | |
| WIND LOAD | CODE | ASCE 7-05 | |
| | V | 120 | m |
| | EXP. | C | |
| | I.F | 1.0 | |
| SEISMIC LOAD | CODE | UBC-97 | |
| | ZONE | 1 | |
| | SOIL TYPE | SD | |
| | I.F | 1.25 | |
| DESIGN PRESS. | WARM | 50 | p |
| | COLD | 50 | p |
| | AIR | ATM | |
| DESIGN TEMP. | WARM | -20 ~ 350 | |
| | COLD | -150 ~ 350 | |
| | AIR | AMB | |
| OPERATING PRESS. | WARM | 10 ~ 20 | p |
| | COLD | 15 ~ 25 | p |
| | AIR | ATM | |
| OPERATING TEMP. | WARM | 140 ~ 300 | |
| | COLD | -127 ~ 91 | |
| | AIR | AMB | |
| NDE | | AS PER ITP | |
| CORROSION ALLOWANCE | C.S | 1/16 | in |
| | S.S | N/A | |
| PAINTING | | SEE NOTE 2 | |

NOZZLE AND CONNECTIONS

| MARK | Q'TY | SIZE | SCH. | RATING | FACING | FLG. MAT'L | MATERIAL NOZZLE | SERVICE |
|---|---|---|---|---|---|---|---|---|
| N1 | 1 | 14" | STD. | ASME 150# | RF, WN | A105 | A53-B ERW | WARM GAS INLET |
| N2 | 1 | 16" | 10S | ASME 150# | RF, WN | A182-F304 | A312-TP304 | COLD GAS INLET |
| N3 | 1 | 54" | 3/8" THK. | 3/4" THK. PLATE FL'G | FF | A36 | A36 | AIR INLET |
| N4 | 1 | 58" | 3/8" THK. | 3/4" THK. PLATE FL'G | FF | A36 | A36 | AIR OUTLET |
| N5 | 1 | 14" | STD. | PIPE END | B.W | - | A53-B ERW. | WARM GAS OUTL |
| N6 | 1 | 16" | 10S | ASME 150# | RF, WN | A182-F304 | A312-TP304 | COLD GAS OUTLE |
| V1,2 | 2 | 4" | 40 | - | - | - | A53-B ERW. | VENT HOLE |
| AC | 1 | 24" | 3/8" THK. | - | - | - | A36 | ACCESS HOLE |
| P | 1 | 1" | STD. | ASME 150# | RF, SW | A105 | A106-B | PILOT GAS |

## NOTE

1. FLANGE BOLTING TO STRADDLE CENTERLINES INDICATED BY CENTERLINE UNLESS NOTED OTHERWISE.
2. PANTING
   1) AIR RISER (EXTERNAL CARBON STEEL SURFACE)
      - SURFACE PREPARATION : SSPC-SP6
      - PRIMER : INORGANIC ZINC (DFT : 2-4 MILS)
      - FINISH : HIGH HEAT ALUMINUM (DFT : 1-1.5 MILS)
   2) AIR RISER SKIRT (INTERNAL CARBON STEEL SURFACE) - PRIMER ONLY
      - SURFACE PREPARATION : SSPC-SP6
      - PRIMER : INORGANIC ZINC (DFT : 2-4 MILS)
   3) WARM GAS RISER (EXTERNAL CARBON STEEL SURFACE) - PRIMER ONLY
      - SURFACE PREPARATION : SSPC-SP6
      - PRIMER : INORGANIC ZINC (DFT : 2-4 MILS)
   4) COLD GAS RISER : NO PAINT
   5) UTILITY (EXTERNAL CARBON STEEL SURFACE) - PRIMER ONLY
      - SURFACE PREPARATION : SSPC-SP6
      - PRIMER : INORGANIC ZINC (DFT : 2-4 MILS)
3. ALL PIPING 2" & SMALLER WILL BE SUPPLIED IN RANDOM LENGTH FOR FIELD ASSEMBLY.

| REFERENCE DRAWING NO. | DESCRIPTION |
|---|---|
| SD-5776 | AFDSMJW-14-16/58 TIP ASSEMBLY |
| SD-5783 | RETRACTABLE T/C TUBING DETAIL |
| SD-5782 | CONDUIT DETAIL |
| SD-5781 | PIPING DETAIL |
| SD-5780 | PIPING ARRANGEMENT |
| SD-5779 | RISER DETAIL |
| SD-5778 | TEMPLATE |

JOBSITE: LOVING, NM

END USER: SAULSBURY INDUSTRIES

S.O. NO.: 31927 | P.O. NO.: 10231-78352 | APP AMZ

ZEECO, INC.
12151 EAST 91st STREET
BROKEN ARROW, OK 74014
PHONE: (918) 258-8551
FAX: (918) 251-5519
www.zeeco.com
sales@zeeco.com

PROPRIETARY DATA IS INCLUDED IN THE INFORMATION DISCLOSED HEREIN AND IS THE PROPERTY OF ZEECO,INC. THIS INFORMATION IS SUBMITTED IN CONFIDENCE AND MUST BE USED IN CONNECTION WITH WORK DONE FOR ZEECO, INC. AND ALL RIGHTS OF DESIGN OR INVENTION ARE RESERVED. UNAUTHORIZED DISCLOSURE OR USE IS PROHIBITED BY LAW.

SELF SUPPORTED FLARE STACK
GENERAL ARRANGEMENT
& LOADING DATA
(TAG: FL-5100)

FOR: LUCID ROAD RUNNER

| DRAWN | DATE |
|---|---|
| NKC | 07JUN17 |
| CHK KJL | APP CJ |
| SCALE NONE | REV 0 |

DRAWING NUMBER SD-5777
SHT. 1 OF 1

| NO | DATE | REVISION DESCRIPTION | BY | CKD | APP. |
|---|---|---|---|---|---|
| | | | | | |

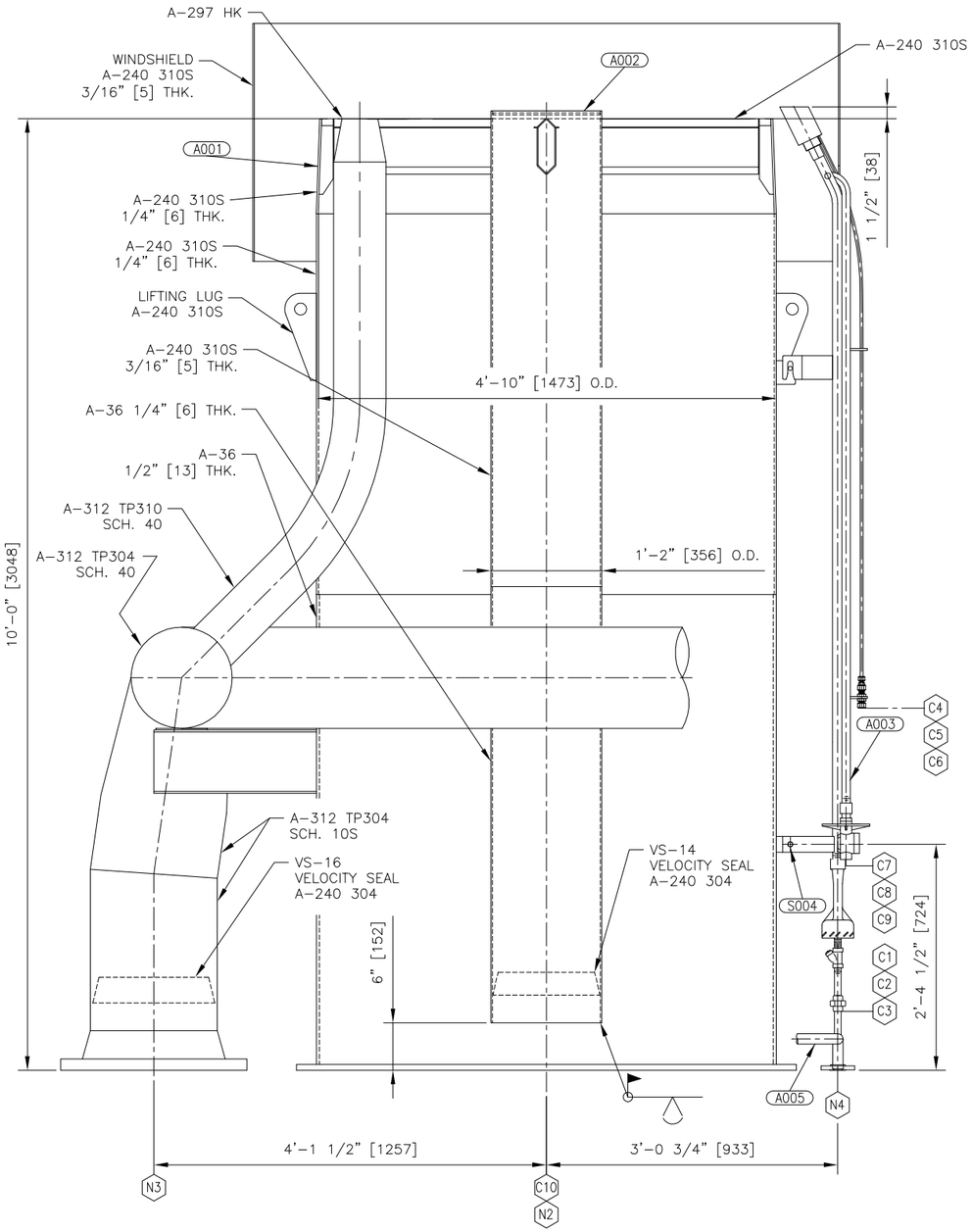


ELEVATION VIEW
(PORTIONS ROTATED FOR CLARITY)

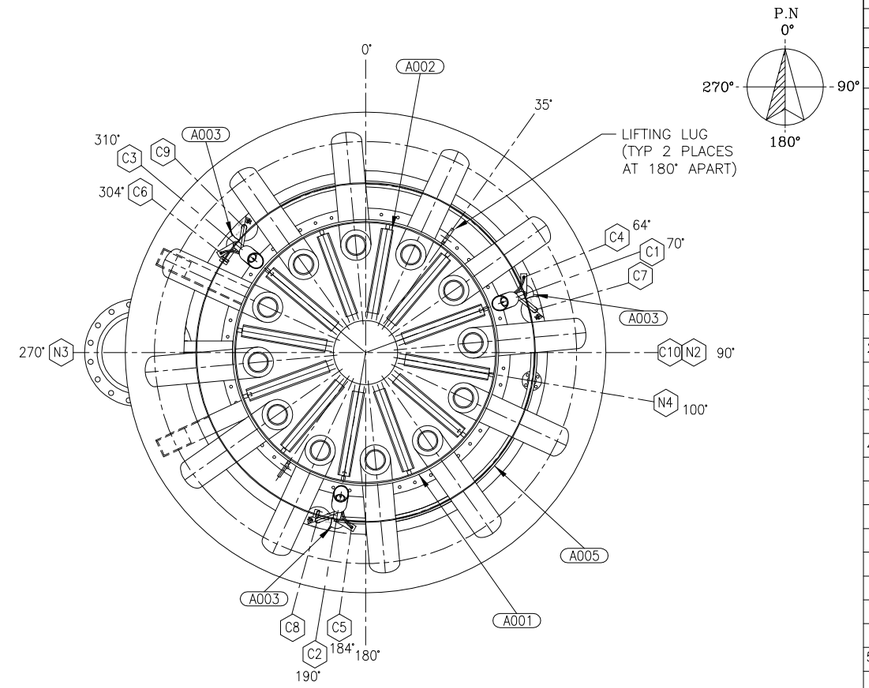


PLAN VIEW
(TRUE ORIENTATION)

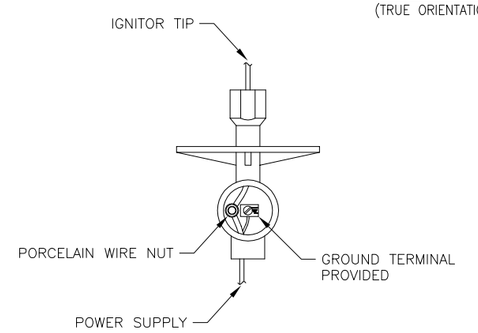


*HEI CONNECTION*

**ZEECO, INC.®**
**Tulsa, Oklahoma USA**
**Combustion and Environmental Solutions. Pure and Simple.®**

AFDSMJW-14-16/58 FLARE TIP ASSEMBLY
TAG: FL-5100
P.O. 10231-78352

| 2017 | 31927 |
|---|---|
| **YEAR BUILT** | **S.O. NUMBER** |

**For parts & service: +1-918-258-8551 / sales@zeeco.com**

*ZEECO NAMEPLATE*

| Item | QTY | Description | P/N |
|---|---|---|---|
| A001 | 1 | AFDSMJW-14-16/58 PLENUM ASS'Y | KC-6504-A001 |
| A002 | 1 | AFDSMJW-14-16/58 CENTER ASS'Y | KC-6505-A002 |
| A003 | 3 | HSLF-Z-HEI-RT/C PILOT ASS'Y | MB-4280-A003 |
| | | COMPLETE WITH: | |
| | | HEI IGNITION PROBE | |
| | | THERMOCOUPLE (SEE DATASHEET) | |
| | | HSLF-Z MIXER BODY (A-743 CF3M) | |
| | | HSLF-Z MIXER SPUD (316 SS) | |
| | | STRAINER W/PLUG (A-743 CF8M) | |
| S004 | 3 | HEAVY HEX BOLT: 1/2-13UNC X 1 1/2" LG. (A-193 B8M) | 080-001-0069 |
| | | W/ HEAVY HEX NUT: 1/2-13 UNC (A-194 GR. 8M) | 081-001-0135 |
| A005 | 1 | PILOT MANIFOLD ASS'Y | KC-6506-A005 |

*– NOTES –*

1. PILOT MIXER ORIFICE DRILLED: 3/64"ø [1.19 mm]
2. PILOT GAS CONSUMPTION: 65 SCFH @ 15 PSIG PER PILOT [1.74 $Nm^3$/HR @ 1.05 $kg/cm^2$ g]
3. PILOT ORIFICE DRILLING BASED ON 1000 BTU/SCF (LHV) [9407 kcal/$Nm^3$] GAS WITH 0.6 SP. GR.
4. WARM GAS FLARE REQUIRES A MINIMUM CONTINUOUS PURGE RATE OF 290 SCFH [7.77 $Nm^3$/HR] AND THE COLD GAS FLARE REQUIRES A MINIMUM CONTINUOUS PURGE RATE OF 980 SCFH [26.25 $Nm^3$/HR] OF A GAS THAT WILL NOT GO TO DEW POINT AT OPERATING TEMPERATURES TO ENSURE AIR DOES NOT MIGRATE DOWN THE FLARE STACK. IT SHOULD BE NOTED THAT DEPENDING UPON THE TURNDOWN OPERATION OF THE FAN AND THE TYPE OF PURGE GAS USED IT MAY BE NECESSARY TO INCREASE THIS MINIMUM PURGE RATE TO ENSURE PROPER COMBUSTION OF THE PURGE GAS DURING IDLE OPERATION.
5. ALL FLARE TIP LIFTING LUGS ARE DESIGNED FOR VERTICAL LIFTS ONLY, NO HORIZONTAL LIFTS OR SIDE LOADS ARE PERMITTED. LUGS ARE INTENDED FOR THE INITIAL INSTALLATION OF ALL FLARE TIPS AND PILOTS ONLY. LIFT LUGS ARE IN THE HEAT AFFECTED ZONE OF ALL FLARE TIPS AND ARE INTENDED TO BE REMOVED BEFORE OPERATION. IF LIFT LUGS ARE USED FOR SUBSEQUENT LIFTS, THEY SHOULD BE THOROUGHLY INSPECTED BY A QUALIFIED INSPECTOR AND DYE PENETRANT TESTS OF 100% OF THE WELDS ATTACHING THE LUGS TO THE FLARE TIP SHELL SHOULD BE PERFORMED
6. ALL FLANGE BOLTING TO STRADDLE NORMAL CENTERLINES.
7. ALL EXTERNAL CARBON STEEL SURFACES TO BE PREPARED PER SSPC-SP6. PRIME WITH ONE COAT INORGANIC ZINC AMERON DIMETCOTE 9 (2-4 MILS DFT MIN.). PAINT ONE COAT SILICONE ENAMEL ALUMINUM (LASTER CASTER LOCK-COAT 9814 ALUMINUM) (1-1.5 MILS DFT MIN.). FINISH COLOR: ALUMINUM
8. ALL TESTING PER INSPECTION TEST PLAN DOCUMENT NO. 31927-4010
9. THE PILOT THERMOCOUPLE IS FOR ON/OFF INDICATION ONLY, NOT FOR ACCURATE MEASUREMENT OF THE PILOT FLAME TEMPERATURE.
10. WHEN INSTALLING THE CENTER ASSEMBLY THE GAS EXIT ARMS MUST BE CENTERED ON THE PILOT AS PER THE PLAN VIEW.
11. APPROXIMATE WEIGHT FOR FLARE TIP ASS'Y: 7,039 LBS [3193 KG]
12. APPROXIMATE WEIGHT FOR EACH PILOT: 100 LBS. [45 KG]

*– REFERENCE DRAWINGS –*

| | |
|---|---|
| SD-5777 | GENERAL ARRANGEMENT |
| WC-9055 | HEIC-3-T/S IGNITION SYSTEM |
| YA-2821 | P & I DIAGRAM FOR FLARE SYSTEM |

*– NOZZLE LEGEND –*

| ITEM | SERVICE | SIZE | RATING | TYPE | SCH/BORE | FLG. MAT'L |
|---|---|---|---|---|---|---|
| C10 | WARM GAS INLET | 14" | N/A | BW | 13 1/2" | A-36 |
| N2 | PLENUM AIR INLET | 63" O.D. X 3/4" THK. X 58 1/4" I.D. W/ (52) 7/8"ø HOLES ON A 60 1/2" B.C. EQU. SPCD. | | | | A-36 |
| N3 | COLD GAS INLET | 16" | 150# | RFWN | S/10S | 304 SS |
| N4 | PILOT GAS MANIFOLD INLET | 1" | 150# | RFSW | S/40 | A-105 |
| C1/C2/C3 | PILOT GAS INLET | 1/2" | 3000# | SW UNION | S/40 | 304 SS |
| C4/C5/C6 | RT/C CONNECTION | 1/2" | N/A | TUBING | N/A | 316L SS |
| C7/C8/C9 | HEI CONNECTION | 3/4" | N/A | FNPT | N/A | CF3M |

| NO. | DATE | REVISION DESCRIPTION | BY | CKD. | APP. |
|---|---|---|---|---|---|
| 0 | 02JUN17 | ISSUED FOR APPROVAL | MKN | GDH | BP |

JOBSITE: LOVING, NM
END USER: LUCID ENERGY
S.O. NO.: 31927 | P.O. NO.: 10231-78352 | APP AMZ

ZEECO, INC.
22151 EAST 91st STREET
BROKEN ARROW, OK 74014
PHONE: (918) 258-8551
FAX: (918) 251-5519
www.zeeco.com
sales@zeeco.com

PROPRIETARY DATA IS INCLUDED IN THE INFORMATION DISCLOSED HEREIN AND IS THE PROPERTY OF ZEECO,INC. THIS INFORMATION IS SUBMITTED IN CONFIDENCE AND MUST BE USED IN CONNECTION WITH WORK DONE FOR ZEECO, INC. AND ALL RIGHTS OF DESIGN OR INVENTION ARE RESERVED. UNAUTHORIZED DISCLOSURE OR USE IS PROHIBITED BY LAW.

AFDSMJW-14-16/58
FLARE TIP ASSEMBLY
TAG: FL-5100

FOR: SAULSBURY INDUSTRIES

| DRAWN | DATE |
|---|---|
| MKN | 02JUN17 |
| CHK GDH | APP BP |
| SCALE NONE | REV 0 |

DRAWING NUMBER
SD-5776
SHT. 1 OF 1

Doug M. Wade 6/6/2017 11:48:53 AM Q:\Job-Information\Flares\31000\31927 Saulsbury (Matthew Adair)\Drafting\Customer\SD-5776-S1R0.dwg Mkn 6/6/2017 7:39:50 AM

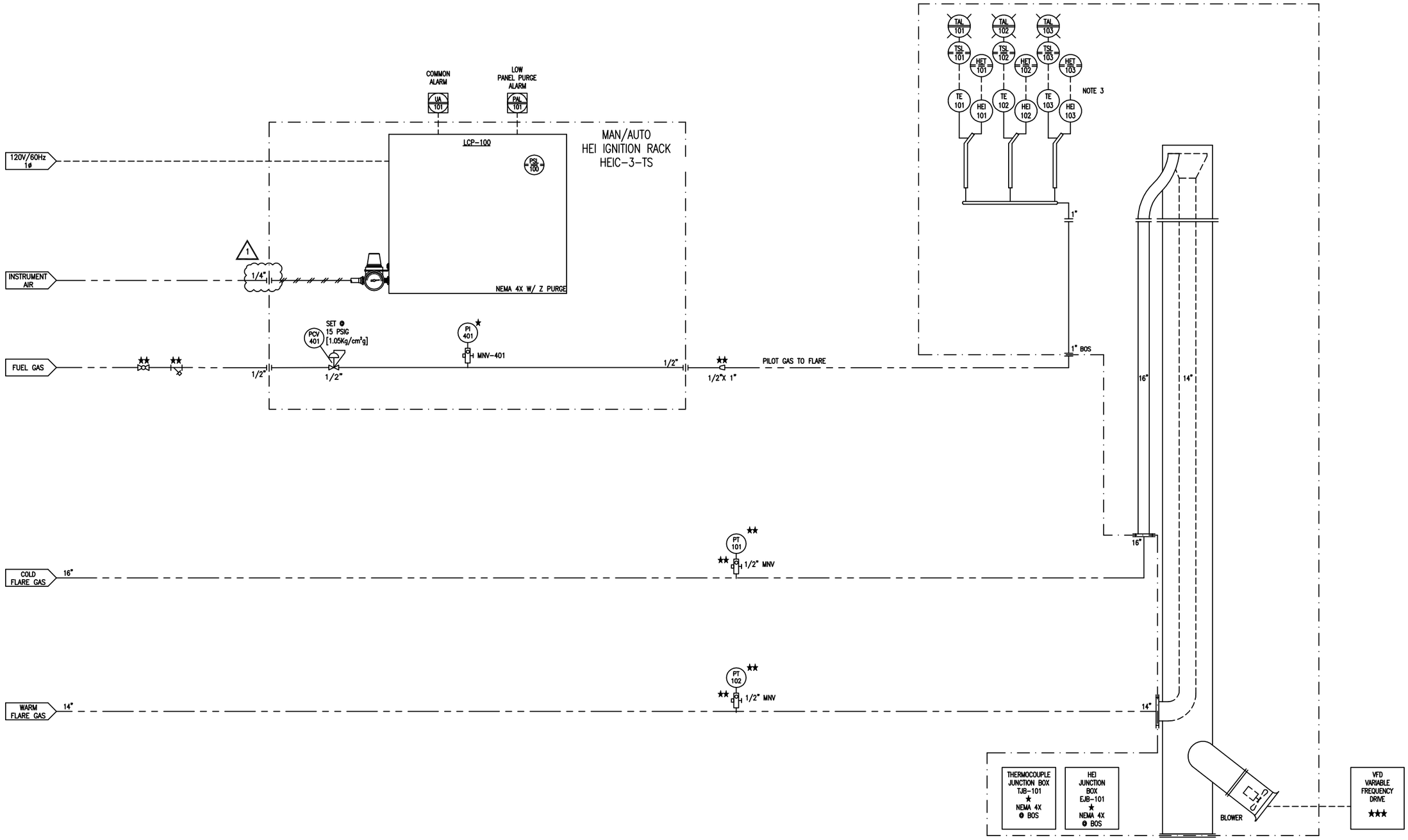


LEGEND

- ELECTRICAL SIGNAL
- PIPING / DUCTING (BY OTHERS)
- BY ZEECO
- 316SS TUBING & FITTINGS (HOKE OR EQUAL) 1/4" UNLESS NOTED OTHERWISE
- ★ ITEMS SHIPPED LOOSE
- ★★ ITEMS SUPPLIED BY OTHERS
- ★★★ MOTOR CONTROL CENTER AND MOTOR STARTER BY OTHERS
- DCS-DISTRIBUTED CONTROL SYSTEM
- LOCAL MOUNTED
- MOUNTED ON LOCAL PANEL
- MOUNTED INSIDE LOCAL PANEL
- LOGIC DEVICE/PLC

NOTES:

1. CLASSIFICATION 1, DIVISION 2 GROUP C,D T2B.
2. THERMOCOUPLES ARE TYPE K, RETRACTABLE.
3. THERMOCOUPLE/HEI WIRING BETWEEN JUNCTION BOXES AT BASE OF STACK AND LOCAL CONTROL PANEL IS SUPPLIED AND INSTALLED BY OTHERS.
4. FUEL GAS SUPPLY FOR PILOT OPERATION IS CONTINUOUS.
5. THE PILOT THERMOCOUPLE IS FOR ON/OFF INDICATION ONLY. IT IS NOT FOR ACCURATE MEASUREMENT OF THE PILOT FLAME TEMPERATURE.

**FOR INFORMATION ONLY**

| NO. | DATE | REVISION DESCRIPTION | BY | CKD. | APP. |
|---|---|---|---|---|---|
| 1 | 08JUN17 | PER ENGINEERING | MCM | BGB | MAA |
| 0 | 30MAY17 | ISSUED FOR APPROVAL | DWB | BGB | MAA |

JOBSITE: LOVING, NEW MEXICO

END USER: LUCID ENERGY

S.O. NO.: 31927 | P.O. NO.: 10231-78352 | APP AMZ

ZEECO, INC.
22151 EAST 91st STREET
BROKEN ARROW, OK 74014
PHONE: (918) 258-8551
FAX: (918) 251-5519
www.zeeco.com
sales@zeeco.com

PROPRIETARY DATA IS INCLUDED IN THE INFORMATION DISCLOSED HEREIN AND IS THE PROPERTY OF ZEECO,INC. THIS INFORMATION IS SUBMITTED IN CONFIDENCE AND MUST BE USED IN CONNECTION WITH WORK DONE FOR ZEECO, INC. AND ALL RIGHTS OF DESIGN OR INVENTION ARE RESERVED. UNAUTHORIZED DISCLOSURE OR USE IS PROHIBITED BY LAW.

PIPING AND INSTRUMENT DIAGRAM

FOR: SAULSBURY INDUSTRIES

| | |
|---|---|
| DRAWN | DWB |
| DATE | 30MAY17 |
| CHK | BGB |
| APP | MAA |
| SCALE | NONE |
| REV | 1 |
| DRAWING NUMBER | YA-2821 SHT. 1 OF 1 |

| | | | |
|---|---|---|---|
| Owner: | Targa | Owner Ref.: | H-1054 |
| Purchaser: | Targa | Purchaser Ref.: | TBD |
| Manufacturer: | Tulsa Heaters Midstream | THM Ref.: | MJ16-199 |
| Service: | Hot Oil Heater | Project: | Roadrunner Plant |
| Number: | 1 | Location: | Jal, NM |
| SHO Duty: | 55.00 MMBTU/ hr | SHO Model: | SHO5000 |

**Guarantees:**

| | | | | |
|---|---|---|---|---|
| NOx | 0.0401 | Lb/MMBTU | 30 | ppm |
| SOx | no quote | Lb/MMBTU | - | ppm |
| CO | 0.0407 | Lb/MMBTU | 50 | ppm |
| VOC | 0.0192 | Lb/MMBTU | 15 | ppm |
| UHC | 0.007 | Lb/MMBTU | 15 | ppm |
| SPM | 0.0133 | Lb/MMBTU | 15 | ppm |

| | | | Design Case | | | |
|---|---|---|---|---|---|---|
| **Heat Release** | LHV Basis | | 63.89 | MMBTU/hr | | |
| **Products of Combustion** | | | | | | |
| | | MW | | | | |
| | O2 | 32.00 | 1,786 | Lbm/ hr | | |
| | N2 + Ar | 28.15 | 45,262 | Lbm/ hr | | |
| | CO2 | 44.01 | 8,217 | Lbm/ hr | | |
| | H2O | 18.02 | 6,961 | Lbm/ hr | | |
| | NOx | 46.01 | 2.56 | Lbm/ hr / | 30 | ppm |
| | SOx | 64.06 | 0.00 | Lbm/ hr / | 0 | ppm |
| | CO | 28.01 | 2.60 | Lbm/ hr / | 50 | ppm |
| | VOC | 44.10 | 1.23 | Lbm/ hr / | 15 | ppm |
| | UHC | 16.04 | 0.45 | Lbm/ hr / | 15 | ppm |
| | SPM | | 0.85 | Lbm/ hr / | 15 | ppm |
| | Total | | 62,234 | Lbm/ hr | | |
| Flue Gas Exit Temp. | | | 517 | °F | | |
| Flue Gas Exit Velocity | | | 35.9 | Ft/sec | | |
| Stack Height | | | 34.3 | ft | | |
| Stack ID | | | 48 | in | | |

**NOTE:**

THM emissions guarantees applicable between 50-100% of Design Case combustion conditions w/ 15% excess air.

THM emissions guarantees applicable for firebox temperatures above 1100°F.

Emissions above are for Design Case operation with air and fuel in ratio control. Upset conditions, such as operation outside the design, high turndown or start-up are not considered as guaranteed emissions cases.

| revision | date | description | by | chk'd | appv'd |
|---|---|---|---|---|---|

USA Applications

SHO = Superior Quality, Flexibility, Dependability & Modularity

EMISSIONS PERMIT DATA SHEET

AMERICAN ENGINEERING SYSTEM of UNITS

MJ16-199-Emissions-



This document contains confidential information proprietary to THM. This document shall not be used, reproduced or disclosed without the prior written consent of THM.

| | | | |
|---|---|---|---|
| Owner: | Targa | Owner Ref.: | H-1054 |
| Purchaser: | Targa | Purchaser Ref.: | TBD |
| Manufacturer: | Tulsa Heaters Midstream, LLC | THM Ref.: | MJ16-199 / |
| Service: | Hot Oil Heater | Project: | Roadrunner Plant |
| Quantity: | 1 | Location: | Jal, NM |
| SHO Duty: | 55.00 MMBTU/ hr | SHO Model: | SHO5000 |
| BMS Release: | 70.28 MMBTU/ hr | BMS Model: | BMS8500 |
| SHOS Flow: | 2,160 USgpm @ 196 ft TDH | SHOS.Model: | SHOS2220 |

Ftnt & Rev

## PROCESS DESIGN CONDITIONS

| Heater Section | - - - | Radiant / Convection | Radiant / Convection | Radiant / Convection | Radiant / Convection |
|---|---|---|---|---|---|
| Operating Case | - - - | Design | | | |
| Service | - - - | Hot Oil Heater | | | |
| Heat Absorption (R/C) | MMBTU/ hr | 36.39 / 18.61 | | | |
| Process Fluid | - - - | Chemtherm 550 | | | |
| Process Mass Flow Rate, Total | Lb/ hr | 885,000 | | | |
| Process Bulk Velocity (calc. R/C) | ft/ s | 8 / 8 | | | |
| Process Mass Velocity (calc. R/C) | Lb/ s ft2 | 408 / 408 | | | |
| Coking Allowance (dP calcs) | in | | | | |
| Pressure Drop, Clean (allow. / calc.) | psi | 30 / 16 | | | |
| Pressure Drop, Fouled (allow. / calc.) | psi | | | | |
| Average Heat Flux (allowable) | BTU/ hr ft2 | 13,000 | | | |
| Average Heat Flux (calculated) | BTU/ hr ft2 | 12,410 | | | |
| Maximum Heat Flux (allowable) | BTU/ hr ft2 | | | | |
| Maximum Heat Flux (calc. R/C) | BTU/ hr ft2 | 22,700 / 26,310 | | | |
| Fouling Factor, Internal | hr ft2 °F/ BTU | 0.002 | | | |
| Corrosion or Erosion Characteristics | - - - | | | | |
| Max. Film Temperature (allow. / calc.) | °F | 635 / 518 | | | |

Inlet Conditions:

| | | | | | |
|---|---|---|---|---|---|
| Temperature | °F | 295 | | | |
| Pressure | psig | 80 | | | |
| Mass Flow Rate, Liquid | Lb/ hr | 885,000 | | | |
| Mass Flow Rate, Vapor | Lb/ hr | 0 | | | |
| Weight Percent, Liquid / Vapor | wt% | 100% / 0% | | | |
| Density, Liquid / Vapor | Lb/ ft3 | 51.10 / 0.00 | | | |
| Molecular Weight, Liquid / Vapor | Lb/ Lbmole | - - - / 0.0 | | | |
| Viscosity, Liquid / Vapor | cp | 2.046 / 0.000 | | | |
| Specific Heat, Liquid / Vapor | BTU/ Lb °F | 0.5675 / 0.000 | | | |
| Thermal Conductivity, Liq./Vap. | BTU/hr ft °F | 0.0702 / 0.000 | | | |

Outlet Conditions:

| | | | | | |
|---|---|---|---|---|---|
| Temperature | °F | 400 | | | |
| Pressure | psig | 64 | | | |
| Mass Flow Rate, Liquid | Lb/ hr | 885,000 | | | |
| Mass Flow Rate, Vapor | Lb/ hr | 0 | | | |
| Weight Percent, Liquid / Vapor | wt% | 100% / 0% | | | |
| Density, Liquid / Vapor | Lb/ ft3 | 48.82 / 0.00 | | | |
| Molecular Weight, Liquid / Vapor | Lb/ Lbmole | - - - / 0.0 | | | |
| Viscosity, Liquid / Vapor | cp | 1.001 / 0.000 | | | |
| Specific Heat, Liquid / Vapor | BTU/ Lb °F | 0.618 / 0.000 | | | |
| Thermal Conductivity, Liq./Vap. | BTU/hr ft °F | 0.068 / 0.000 | | | |

| revision | date | description | by | chk'd | appv'd |
|---|---|---|---|---|---|
| A | | Issued with Proposal | | | |




This document contains confidential information proprietary to THM. This document shall not be used, reproduced or disclosed without the prior written consent of THM.

Owner Ref.: H-1054 THM Ref.: MJ16-199

Ftnt & Rev

## COMBUSTION DESIGN CONDITIONS

**Overall Performance:**

| | | |
|---|---|---|
| Operating Case | - - - | Design |
| Service | - - - | Hot Oil Heater |
| Excess Air | mol% | 15.0% |
| Calculated Heat Release (LHV) | MMBTU/ hr | 63.89 |
| Guaranteed Efficiency | HR% | 84.1% |
| Calculated Efficiency | HR% | 86.1% |
| Radiation Loss | HR% | 2.00% |
| Flow Rate, Combustion Gen./ Imp. | Lb/ hr | 62,234 |
| Flue Gas Temp. Leaving (R/C) | °F | 1,520 / 517 |
| Flue Gas Mass Velocity | Lb/ sec ft2 | 0.667 |

**Fuel(s) Data:**

| | | Gas 1 Mol.Wt. | Gas 2 Mol.Wt. | Gas 3 Mol.Wt. | Design Fuel Oil |
|---|---|---|---|---|---|
| LHV | BTU/ scf | 937 | | | - - - |
| LHV | BTU/ Lb | 21,012 | | | |
| P @ Burner | psig | 75 | | | |
| T @ Burner | °F | 100 | | | |
| MW | Lb/ Lbmole | 16.93 | | | - - - |
| Flow @ design | lb/hr | 3,041 | | | |
| Flow @ design | scfh | 68,172 | | | |
| Atomizing Media | | - - - | | | |
| Atom. Media P & T | | - - - | | | |

**Components:**

| | | | | | |
|---|---|---|---|---|---|
| N | wt% | - - - | | | |
| S | wt% | - - - | | | |
| Ash | wt% | - - - | | | |
| Ni | ppm | - - - | | | |
| Va | ppm | - - - | | | |
| Na | ppm | - - - | | | |
| Fe | ppm | - - - | | | |
| H2 | mol% | 0.0% | | | - - - |
| O2 | mol% | 0.0% | | | - - - |
| N2 + Ar | mol% | 1.0% | | | - - - |
| CO | mol% | 0.0% | | | - - - |
| CO2 | mol% | 0.1% | | | - - - |
| CH4 | mol% | 97.0% | | | - - - |
| C2H6 | mol% | 2.3% | | | - - - |
| C2H4 | mol% | 0.0% | | | - - - |
| C3H8 | mol% | 0.1% | | | - - - |
| C3H6 | mol% | 0.0% | | | - - - |
| C4H10 | mol% | 0.6% | | | - - - |
| C4H8 | mol% | 0.0% | | | - - - |
| C5H12 | mol% | 0.0% | | | - - - |
| C5H10 | mol% | 0.0% | | | - - - |
| C6+ | mol% | 0.0% | | | - - - |
| H2S | ppmv | 0.0% | | | - - - |
| SO2 | mol% | 0.0% | | | - - - |
| NH3 | mol% | 0.0% | | | - - - |
| H2O | mol% | 0.0% | | | - - - |
| spare | mol% | 0.0% | | | - - - |

**Blower/Fan Peformance:**

| | | |
|---|---|---|
| Volumetric Flow | acfm | 13,000 |
| Rated Power | HP | 40 |
| Fan Speed | RPM | 1,800 |
| Sound Pressure | dBA | < 85 |
| Area Classification | NEC | Class I, Div. II, Groups C&D |

**Burner Design:**

| | | | |
|---|---|---|---|
| OEM | - - - | Callidus Technologies, LLC | |
| Type | - - - | Enhanced IFGR | |
| Quantities | - - - | 1 | ULTRA Low NOx |
| Model No. | - - - | CUBL-16W-HC-HZ | Cylindrical |
| Windbox | - - - | yes ... | |
| Location | - - - | EndWall Center ... | Horizontally Fired |

**Pilot Design:**

| | | | |
|---|---|---|---|
| Type / Model | | Self-Inspirating / | by O.E.M. |
| Ignition | - - - | Electric | requires elec.ign.system |
| Heat Release | - - | > 350000 BTU/ hr on ... | Gas 1 |

**Burner Performance:**

| | | |
|---|---|---|
| Minimum Heat Release | MMBTU/ hr | 14.06 |
| Design Heat Release | MMBTU/ hr | 63.89 |
| Maximum Heat Release | MMBTU/ hr | 70.28 |
| Burner Turndown | Max:Min | 5.00 |
| Volumetric Ht. Release | BTU/ hr ft3 | 7,743 |
| Pressure @ Arch | inH2O | 1.60 |
| Pressure @ Burner | inH2O | 8.22 |
| Combustion Air T @ Burner | °F | 60 |
| Flue Gas T @ Burner | °F | 1,320 |

**Guaranteed Emissions:**

| | | | |
|---|---|---|---|
| Basis of Guarantee | - - - | 3.0% O2, | dry (LHV) |
| NOx Emissions | Lb/MMBTU | 0.040 | 30 ppm |
| SOx Emissions | Lb/MMBTU | no quote | |
| CO Emissions | Lb/MMBTU | 0.041 | 50 ppm |
| VOC Emissions | Lb/MMBTU | 0.019 | 15 ppm |
| UHC Emissions | Lb/MMBTU | 0.007 | 15 ppm |
| SPM10 Emissions | Lb/MMBTU | 0.013 | 15 ppm |
| Noise Emissions | dBA @ 3ft | 85 | |

**Net Flame Clearances:**

| | |
|---|---|
| Est. Flame Size | approx. 34.5 ft L x 6 ft Diameter |
| Hor Clearance | 3.5 ft NET Tube Clearance |
| Vert. Clearance | 3.5 ft NET Tube Clearance |
| Axial Clearance | 6.67 ft NET Refractory Clearance (to Target hot face) |

**Nominal Flame Clearances:**

| from burner CL ... | | Vertical | Horizontal |
|---|---|---|---|
| to Tube CL, API | ft | 28.60 | 19.07 |
| to Tube CL, calc. | ft | 6.50 | 6.50 |
| to Refrac., calc. | ft | n / a | 41.17 |

Owner Ref.: H-1054 THM Ref.: MJ16-199

## PRESSURE PARTS DESIGN

| | | | | |
|---|---|---|---|---|
| **Coil Design:** | | RADIANT | SHIELD | CONVECTION |
| Service | | Hot Oil Heater | Hot Oil Heater | Hot Oil Heater |
| Design Basis for Tube Temperature | | API 530 | API 530 | API 530 |
| Design Basis for Tube Wall Thickness | | ASME Sec. VIII-1 | ASME Sec. VIII-1 | ASME Sec. VIII-1 |
| Design Life | hr | 100,000 | 100,000 | 100,000 |
| Design Pressure (elastic / rupture) | psig | 250 / | 250 / | 250 / |
| Design Fluid Temperature | °F | 400 | 400 | 400 |
| Design Temperature Allowance | °F | 25 | 25 | 25 |
| Design Corrosion Allowance (tubes/fittings) | in | 0.063 / 0.063 | 0.063 / 0.063 | 0.063 / 0.063 |
| Maximum Tube Temperature (clean) | °F | 540 | | |
| Maximum Tube Temperature (fouled) | °F | 590 | 485 | 588 |
| Design Tube Temperature | °F | 615 | 613 | 613 |
| Inside Film Coefficient | BTU/ hr ft2 °F | 210 | 164 | 164 |
| Weld Inspection | RT or Other | 100 of 10% | 100 of 10% | 100 of 10% |
| Weld Heat Treatment | s.rel., t.stab. or none | None | None | None |
| Hydrostatic Test Pressure | psig | per API | per API | per API |
| **Coil Arrangement:** | | Horizontal | Horizontal | Horizontal |
| Coil Type | - - - | Helical | Serpentine | Serpentine |
| Tube Material (pipe or tube spec) | ASTM | SA106GrB | SA106GrB | SA106GrB |
| Supplementary Mfg Requirements | ASTM | None | None | None |
| Tube Outside Diameter | in | 6.625 | 6.625 | 6.625 |
| Tube Wall Thickness (aw / mw) | in | 0.280 / 0.245 | 0.280 / 0.245 | 0.280 / 0.245 |
| Number of Cells (radiant or convection) | - - - | 1 | 1 | 1 |
| Number of Flow Passes (total / cell) | - - - | 3 / 3 | 3 / 3 | 3 / 3 |
| Number of Tubes per Row (total / cell) | - - - | | 4 / 4 | 4 / 4 |
| Overall Tube (1 turn in radiant) Length | ft | 40.84 | 16.04 | 16.04 |
| Effective Tube Length / Helix Diameter | ft | 40.84 / 13.00 | 14.46 | 14.46 |
| Number of Turns or Tubes (total / pass) | | 41.4 / 13.8 | 4.0 / 4.0 | 0.0 / 0.0 |
| Total Exposed Surface | ft2 | 2,932 | 100 | 0 |
| Number of Ext.Surf. Tubes (total / cell) | - - - | 0 / 0.0 | 0 / 0.0 | 36 / 36.0 |
| Total Exposed Surface | ft2 | 0 | 0 | 8,599 |
| Tube Spacing (horiz. / tube centers) | in | - - - / 11.50 | 12.00 / 12.00 | 12.00 / 12.00 |
| Tube Spacing (horiz. to refractory) | in | 9.00 | 6.00 | 6.00 |
| Coil Fluid Volume | USgal | 2632 | 104 | 935 |
| **Coil Fittings:** | | Hot Oil Heater | Hot Oil Heater | Hot Oil Heater |
| Fitting Type | - - - | SR 90° Elbows | SR 180° U-Bends | SR 180° U-Bends |
| Fitting Material | ASTM | SA234 WPB | SA234 WPB | SA234 WPB |
| Supplementary Mfg Requirements | ASTM | None | None | None |
| Fitting Outside Diameter | in | 6.625 | 6.625 | 6.625 |
| Fitting Wall Thickness (aw / mw) | in | 0.280 / 0.245 | 0.280 / 0.245 | 0.280 / 0.245 |
| Fitting Location | internal or external | Internal | External | External |
| Tube Attachment | welded or rolled | Welded | Welded | Welded |
| **Coil Terminals:** | | Outlet | | Inlet |
| Terminal Type | beveled or flanged | Flanged | | Flanged |
| Flange Material | ASTM | SA105N | | SA105N |
| Supplementary Mfg Requirements | ASTM | None | | None |
| Flange Size and Rating | NPS/ ASME | 6" NPS / 300# | | 6" NPS / 300# |
| Flange Type | RFWN or RTJ | RFWN | | RFWN |
| Location | - - - | Burner Endwall | | Terminal End |
| **Extended Surface:** | | CONVECTION | CONVECTION | CONVECTION |
| Service | - - - | Hot Oil Heater | Hot Oil Heater | Hot Oil Heater |
| Fin or Stud Row Number | starting @ bottom | No.1 / No.2-3 | No.4-5 / No.6-9 | / |
| Ext. Surface Type | seg.fins, solid fins, studs | HF Seg. Fins | HF Seg. Fins | |
| Fin/Stud Material | - - - | C.S. / C.S. | C.S. / C.S. | / |
| Fin/Stud Height | in | 0.50 / 0.50 | 0.75 / 1.00 | / |
| Fin/Stud Thickness | in | 0.06 / 0.06 | 0.06 / 0.06 | / |
| Fin/Stud Density | fin/ in | 3.00 / 5.00 | 5.00 / 5.00 | / |

## PRESSURE PARTS DESIGN (continued)

| | | | | | |
|---|---|---|---|---|---|
| Crossovers: | | RADIANT | SHIELD | CONVECTION | |
| Type, location / connections | - - - | External | / Flanged | None | |
| Tube / Fittings Material | ASTM | SA106GrB | / SA234 WPB | | |
| Tube & Fitting OD / Thickness (aw) | in | 6.625 | / 0.280 | | |
| Inlet Manifold(s): | type | | | Simple LOG | |
| Location | - - - | | | Top - Term. End | |
| Design Basis for Manifold Thickness | - - - | | | ASME B31.3 | |
| Design Conditions (temp./press.) | °F/ psig | | | 613 / 250 | |
| Pipe Material | ASTM | | | SA106GrB | |
| Fittings Material | ASTM | | | SA234 WPB | |
| Flange Material / Style | ASTM | | | SA105N / RFWN | |
| Outside Diameters, each Branch | in | | | 16" NPS | |
| Wall Thickness(es); aw ~~or mw~~ | in | | | SCH40 (0.5) | |
| End Types (terminal/ dead) | beveled or flanged | | | Flanged / W.Cap | |
| Manifold Terminal Type | NPS/ ASME | | | 16" NPS / 300# Flg | |
| Coil Connection Type | extrusion, olet, etc. | | | Weld-O-Let | |
| Coil Terminal Type | NPS/ ASME | | | 6" NPS / 300# Flg | |
| Outlet Manifold(s): | type | Simple LOG | | | |
| Location | - - - | Burner Endwal | | | |
| Design Basis for Manifold Thickness | - - - | ASME B31.3 | | | |
| Design Conditions (temp./press.) | °F/ psig | 615 / 250 | | | |
| Pipe Material | ASTM | SA106GrB | | | |
| Fittings Material | ASTM | SA234 WPB | | | |
| Flange Material / Style | ASTM | SA105N / RFWN | | | |
| Outside Diameters, each Branch | in | 16" NPS | | | |
| Wall Thickness(es); aw ~~or mw~~ | in | SCH40 (0.5) | | | |
| End Types (terminal/ dead) | beveled or flanged | Flanged / W.Cap | | | |
| Manifold Terminal Type | NPS/ ASME | 16" NPS / 300# Flg | | | |
| Coil Connection Type | extrusion, olet, etc. | Weld-O-Let | | | |
| Coil Terminal Type | NPS/ ASME | 6" NPS / 300# Flg | | | |

## COIL & MANIFOLD SUPPORTS DESIGN

| | | | | | |
|---|---|---|---|---|---|
| Tube Supports: | | RADIANT | SHIELD | CONVECTION | |
| Service | | Hot Oil Heater | Hot Oil Heater | Hot Oil Heater | |
| Location | Top, Bottom, Ends | Bottom | Ends | Ends | |
| Support Type | casting, tubesht, spring, etc. | SS Pipe Rail | Welded Tbsheets | Welded Tbsheets | |
| Support Thicknesses | in | SCH40 | 0.375 | 0.375 | |
| Support Materials | ASTM | A240 T304 | A36 CS | A36 CS | |
| Support Temperatures (calc./ design) | °F / °F | 951 / 1,140 | 628 / 780 | 628 / 780 | |
| TbSht Ferrules Thickness/Materials | in/ ASTM | - - - / - - - | 14 ga. / 304 SS | 14 ga. / 304 SS | |
| Refractory & Anchor Materials & Types | | none | per refrac. section | per refrac. section | |
| Intermediate Guides & Supports: | | None | None | None | |
| Location | - - - | | | | |
| Guide/ Support Type | casting, spring, etc. | | | | |
| Material | ASTM | | | | |
| Spacing, average | ft | | | | |
| Tube Guides: | Top, Bottom, Ends | None | None | None | |
| Material | ASTM | | | | |
| Manifold Supports: | | Outlet Manifold | | Intlet Manifold | |
| Material | ASTM | A36 | | N/A | |
| Materials Design & Supply | - - - | by THM | | | |
| Location | Top, Bottom, Ends | Burner Endwal | | | |
| Support Type | roller, shoe, spring, etc. | Simple Shelf | | | |
| Number of Supports | - - - | One (1) | | | |

Owner Ref.: H-1054 THM Ref.: MJ16-199

## CASING / REFRACTORY SYSTEMS DESIGN

| | | | | | |
|---|---|---|---|---|---|
| | | BURNER | | SHIELDED | TARGET |
| Radiant Section Design: | | ENDWALL | | SIDEWALLS | ENDWALL |
| Total Refractory Thickness | in | 5.0 | | 3.0 | 5.0 |
| Hot Face Temperature (design) | °F | 2,000 | | 2,000 | 2,000 |
| Hot Face Temperaure (calculated) | °F | 1,520 | | 951 | 1,520 |
| Hot Face Layer | in/ - - - | 1/ 8# CF Blanket | | 1/ 8# CF Blanket | 1/ 8# CF Blanket |
| Back-Up Layer No.1 | in/ - - - | 1/ 8# CF Blanket | | 2/ 6# CF Blanket | 1/ 8# CF Blanket |
| Back-Up Layer No.2 | in/ - - - | 3/ 6# CF Blanket | | None | 3/ 6# CF Blanket |
| Foil Vapor Barrier | in/ - - - | None | | None | None |
| Castable Reinforcement (SS Needles) | wt% | None | | None | None |
| Anchors / Tie Backs: | - - - | Pins & Clips | | Pins & Clips | Pins & Clips |
| Material | - - - | 310 S.S. | | 304 S.S. | 310 S.S. |
| Attachment | - - - | Welded | | Welded | Welded |
| Casing: | | | | | |
| Material | in/ ASTM | 0.1875 / A36 | | 0.1875 / A36 | 0.1875 / A36 |
| Internal Coating | - - - | None | | None | None |
| External Temperature, Typical | °F | 180 | | 180 | 180 |
| Comments / Clarifications | - - - | w/ cfb wraps | | w/o cfb wraps | w/ cfb wraps |
| | | SHOP Installed | | SHOP Installed | SHOP Installed |

| | | SIDEWALLS | | ENDWALLS | |
|---|---|---|---|---|---|
| Convection Section Design | | SHIELD | FINNED | TUBESHEETS | HEADER BOXES |
| Total Refractory Thickness | in | 3.0 | 3.0 | 3.0 | 2.0 |
| Hot Face Temperature (design) | °F | 2,000 | 2,000 | 2,200 | 2,000 |
| Hot Face Temperaure (calculated) | °F | 1,019 | 1,019 | 1,019 | 739 |
| Hot Face Layer | in/ - - - | 1/ 8# CF Blanket | 1/ 8# CF Blanket | 3/ Sparlite HS | 1/ 8# CF Blanket |
| Back-Up Layer No.1 | in/ - - - | 2/ 6# CF Blanket | 2/ 6# CF Blanket | None | 1/ 8# CF Blanket |
| Back-Up Layer No.2 | in/ - - - | None | None | None | None |
| Foil Vapor Barrier | in/ - - - | None | None | None | None |
| Castable Reinforcement (SS Needles) | wt% | None | None | None | None |
| Anchors / Tie Backs: | - - - | Pins & Clips | Pins & Clips | Bullhorns | Pins & Clips |
| Material | - - - | 310 S.S. | 304 S.S. | 304 S.S. | 304 S.S. |
| Attachment | - - - | Welded | Welded | Welded | Welded |
| Casing: | | | | | |
| Material | in/ ASTM | 0.1875 / A36 | 0.1875 / A36 | | 0.1345 / A36 |
| Internal Coating | - - - | None | None | None | None |
| External Temperature, Typical | °F | 180 | 180 | | 180 |
| Comments / Clarifications | - - - | Cleaning/Sootblowing lanes: none | | | Bolted Assembly |
| | - - - | SHOP Installed | SHOP Installed | SHOP Installed | SHOP Installed |

| | | FLUE GAS DUCTS | | | |
|---|---|---|---|---|---|
| Stack & Uptakes Design: | | BREECHING | 15° TRANSITION | DISCH. DUCT | |
| Quantity | | One | One | One | |
| Type / Location | - - - | Full L / Conv | Full L / Conv | Self.Spt / Grade | |
| Length / Metal Outside Diameter (top) | ft/ ft | 1.00 / n/ a | 2.02 / n/ a | 7 / 4.000 | |
| Discharge Elev., minimum/ calculated | ft/ ft | n/ a / n/ a | n/ a / n/ a | 20 / 34 | |
| Total Refractory Thickness | in | 3.0 | 0.0 | 0.0 | |
| Hot Face Temperature (design) | °F | 2,000 | | | |
| Hot Face Temperaure (calculated) | °F | 517 | 517 | 517 | |
| Hot Face Layer | in/ - - - | 1/ 8# CF Blanket | None | None | |
| Back-Up Layer No.1 | in/ - - - | 2/ 6# CF Blanket | | | |
| Castable Reinforcement (SS Needles) | | None | | | |
| Anchors / Tie Backs: | - - - | Pins & Clips | | | |
| Material | - - - | 304 S.S. | | | |
| Attachment | - - - | Welded | | | |
| Casing: | | | | | |
| Minimum Thickness/ Materia | in/ ASTM | 0.1875 / A36 | 0.1875 / A36 | 0.1875 / A36 | |
| Corrosion Allowance | in | None | None | None | |
| Internal Coating | - - - | None | None | None | |
| External Temperature, Typical | °F | 180 | 517 | 517 | |
| Comments / Clarifications | - - - | SHOP Installed | | | |

## MECHANICAL / STRUCTURAL DESIGN BASIS

Refractory & Coatings Design:

| | | |
|---|---|---|
| Refractory Design | Per Std560: 180°F Avg. Casing Temperature @ Ambient Conditions of 0 MPH & 80°F | |
| Refractory Dryout | SHOP dryout = None // FIELD dryout per THM standard. | |
| Coating, Internal | None | |
| Coating, External | Base Coat: | 3-4 PPG Dimetcote 9 IOZ Silicate - Flat Green on SP-6 |
| | Int. Coat: | None |
| | Top Coat: | 1.5-2 PPG Pitt-Therm 97-724 Series Air Dry Silicone - Federal Standard 595B #16132 Gray |

Applicable Standards:

| | | | |
|---|---|---|---|
| API | ~~Std 560 (ISO 13705); Fired Heaters for ...~~ | AISC | Specification for Design, ... Steel for Buildings |
| API | Std 530 (ISO 13704); Calc. of Heater Tube ... | AWS | D 1.1; Structural Welding Code |
| ASME | B31.3, Chemical Plant and ... Piping | ASTM | tube/ smls pipe/ fitting spec's noted herein |
| ASME | Sections I, II, VIII, IX; ASME B&PV Code | ASTM | refractories per C27, C155, C401 & C612 |
| ASME | Section V; Non Destructive Examination | NFPA | NFPA 70; National Electrical Code |

| Wind Design: | | Seismic Design: | |
|---|---|---|---|
| Spec. or Standard | ASCE 7-10 | Spec. or Standard | ASCE 7-10 |
| Velocity/ Imp. Factor | 120 mph / 1 | Risck Cat./Imp. Factor | III / 1.25 |
| Site Exposure | "C" | Ss/S1/Soil Class | 0.5 / 0.15 / D |
| **Physical Design:** | | **Site Design Basis:** | |
| Plot Limitations | None | Site Elevation | 25 ft AMSL |
| Tube Limitations | None | Stack Design Temp. | 90 °F |
| Firebox Pressure | Positive; approximately +1.0 inH2O | FG Discharge Elev. | 34 ft AG |
| Ambient Temp's | -20 °F Min/ 60 °F Dsn/ 105 °F Max | Area Classification | Class I, Div. II, Groups C&D |

## MAJOR SUBSYSTEMS & ACCESSORIES

| Major Services & Subsystems | | Major Accessories: | | |
|---|---|---|---|---|
| Process Design | INCLUDED in base pricing | Casing/ Tube Seals | 12 | TubeSox; Radiant & Conv. |
| Mechanical Design | INCLUDED in base pricing | Observation Doors | 2 | 4 in Dia. w/ H.T. glass |
| Structural Design | INCLUDED in base pricing | Observation Doors | 1 | 4 in Dia. w/ HT glass on Arch |
| Radiant Section | INCLUDED in base pricing | Access Doors | 1 | Std 24" x 24" |
| Convection Section | INCLUDED in base pricing | Expansion Joints | None | |
| Burner Mgmt | INCLUDED in base pricing | Ladders & Platforms | Not Included | |
| Burner Piping | INCLUDED in base pricing | L&P Coating | N/A | |
| Forced Draft System | INCLUDED in base pricing | | | |

| Casing Penetrations | | | Pressure Part Penetrations | | |
|---|---|---|---|---|---|
| Fbox Purge/ Snuff | None | | Coil TSTC's, Radiant | None | |
| CA Temp/Pres | None | | Coil TSTC's, Convection | None | |
| FG Temperature | 2 | 1.5"NPS 3000# Coupling | Process TI conn's | 3 | 1.5" NPS 300# RFWN |
| FG Pressure | 2 | 1.5"NPS 3000# Coupling | Process PI conn's | 1 | 1.5" NPS 300# RFWN |
| FG Comp. (Sample) | 2 | 1.5"NPS 3000# Coupling | spare | | |
| FG Sample | 2 | 4"NPS 150# RFWN's | spare | | |
| O2 Analyzer Port | None | | spare | | |

Dampers

| | FD Fan (blower) qty = 0 | Uptake Ducts | Stack qty = 0 |
|---|---|---|---|
| Function | Note: | | Note: |
| Design | Fan inlet damper is inappropriate | | Stack Damper (which provides draft |
| Materials | for forced draft SHO's where O2 | | control) is inappropriate for forced |
| Bearings | Control is provided by the BMS O2 | | draft SHO's where the combustion |
| Operator | Trim Module which controls the fan | | conditions are controlled real-time |
| Positioner | (blower) motor's VFD/ VSD. | | via the BMS. |
| Instruments | | | |

| Sootblowers: | Qty. | Type | Location | FG T | Material | Steam T & P | O.E.M. / Ref. |
|---|---|---|---|---|---|---|---|
| Lane 1: | None | | | | | | |
| Lane 2 : | None | | | | | | |

# THOMAS RUSSELL CO.
Tulsa, Oklahoma

| | | | |
|---|---|---|---|
| JOB NO: | TRJ-250 | DATE: | 9/21/2010 |
| CLIENT: | Southcross Energy | BY: | JRG |
| SUBJECT: | 200 MMscfd Cryo Plant | | |

## FIRED HEATER

| | | | |
|---|---|---|---|
| Service: | Regen Gas Heater | Tag No: | H-741 |
| Design Duty, MBTU/Hr | 5248 | Type: | Helical Coil |
| No. of Coils per Unit | One | No. Units: One | Model: Heatec HCI-5010-40-G |

| Fluid | | Regen Gas Inlet | Regen Gas Outlet |
|---|---|---|---|
| Liquids | Lbs/Hr | 0 | 0 |
| Density | Lbs/CuFt | | |
| Molecular Weight | | | |
| Specific Heat | BTU/Lb °F | | |
| Thermal Cond. | BTU/Hr-Ft-°F | | |
| Viscosity | cP | | |
| Vapor | Lbs/Hr | 19013 | 19013 |
| Density | Lbs/CuFt | 3.389 | 1.716 |
| Molecular Weight | | 19.68 | 19.68 |
| Specific Heat | BTU/Lb °F | 0.6261 | 0.7407 |
| Thermal Cond. | BTU/HrFt °F | 0.0239 | 0.0438 |
| Viscosity | cP | 0.0140 | 0.0195 |
| Operating Temp. | °F | 135 | 550 |
| Operating Pressure | PSIA | 950 | |
| Velocity | Ft/Sec | Allow. | Calc. |
| Pressure Drop | PSI | 10 Allow. | Calc. |
| Fouling Resistance | SqFt*F/BTU | 0.001 | |
| Design Press. / Temp. | | 1095 PSIG | 650 °F |
| Min. Design Mtl. Temp. | | -20 °F @ | 1095 PSIG |
| Corrosion Allowance | | 0.0625 | |
| Insulation Thickness | | 3" - 5" ceramic fiber on the interior | |
| Efficiency-Based on LHV | (%) | 85.0% | (Assume 3% Loss) |
| Excess Air | | 15 | |
| Firebox Unit Heat Release | | 27,800 | BTU/Hr- Ft^3 |
| Number of Passes | | One - process, Two - fireside | |

| Burners | | Gas | Oil |
|---|---|---|---|
| LHV | (BTU/cf) | 973 | |
| Mol. Wt. | | 18.26 | |
| Gravity | | | |
| Pressure Avail. | (psig) | 100 | |
| Pressure Req'd | (psig) | 10 | |
| Steam for Atomizing | | | |
| Fuel Gas Req'd (MSCFD) | | 156.86 | N/A |
| Mfgr: | | Eclipse WINOX | |
| Type: | | Forced Draft - 20 Hp Blower | |
| Number Req'd | | One | |
| Pilots Req'd | | Yes , electrical ignition | |
| NOx | | 40 ppm | |

| Structural Design | |
|---|---|
| Wind Load, MPH, (3) | 90, Exp.C, I=1.15, Cf=0.7 |
| Seismic Zone, (3) | I = 1.25 |
| Ambient, °F | -20 / 110 |
| Elevation, Ft | 750 |

| Stack Design | |
|---|---|
| Self-supporting | Yes |
| Minimum Height | 8 ft above top of heater |
| Minimum Wall Thickness: | 0.125 |
| Lining Type | No |
| Lining Thickness: | No |
| Damper: | No |

| Coil Design | | Radiant | Convection-Bare | Convection-Finned |
|---|---|---|---|---|
| Gas Temperature | In/Out | 135 / 550 | | |
| Number Tubes | | One | | |
| Tube O.D. | In | Single Circuit 4" | 4" 900# RTJ Flg | Inlet and Outlet |
| Tube Length | Eff. Ft | ----- | | |
| Bare Surface | Sq Ft | 697 | | |
| Finned Surface | Sq Ft | N/A | | |
| Avg. Heat Flux | BTU/Hr-Sq Ft | 8,278 | | |
| Tube Materials | | SA-106 Gr.B Sch 80 | SA- | SA- |

| | | | | |
|---|---|---|---|---|
| Convection Fins (inch): | Height: | Thickness: | No. / inch: | Material: |
| Overall Dimension: | 25' - 8" L x 7' - 0" W x 8' - 6" H (less stack) | | Dry Weight: | 18,450 lbs |
| Code Requirements: | ASME VIII Div I | Stamp: Yes | Nat'l Board: | Yes |

**Notes:**

1) **Add 30% to duty and 10% flow rates for design.**
2) See attached Scope of Supply.
3) ▲ Wind design per ASCE 7-10, V=150 mph, Exposure C. Seismic design per ASCE 7-10, I=1.25, Site D. , $S_S$ =40% , $S_1$ =8%
4) Electric power to be 480 v / 3 ph / 60 hz. Control enclosures to be NEMA 4.
5) Add Spare ignitor.

| REVISION | A | | 0 | | 1 | | ▲ 2 | |
|---|---|---|---|---|---|---|---|---|
| ENGINEER/DATE | JRG | 9/21/10 | JRG | 9/21/10 | JRG | 9/14/11 | MTR | 9/20/11 |
| ISSUED FOR | RFQ | | Purchase | | Revised | | Revised | |

## HEATER DESIGN DATA

INPUT: 7,387,616 X 1.3 BTU/HR
OUTPUT: 5,770,000 X 1.3 BTU/HR
FLOW RATE: 20,840 X 1.1 LBS/HR
TRANSFER MEDIA: REGENERATION GAS
HEATING SURFACE: 741 SQ FT
DESIGN: 1095 PSI @ 650 F
ASME CODE: SECTION VIII, DIV 1 2010 EDITION, NO ADDENDA
OUTLET MEDIA TEMP: 550 F
PRESSURE DROP: 6 PSI
ESTIMATED DRY WEIGHT: 23,500 LBS

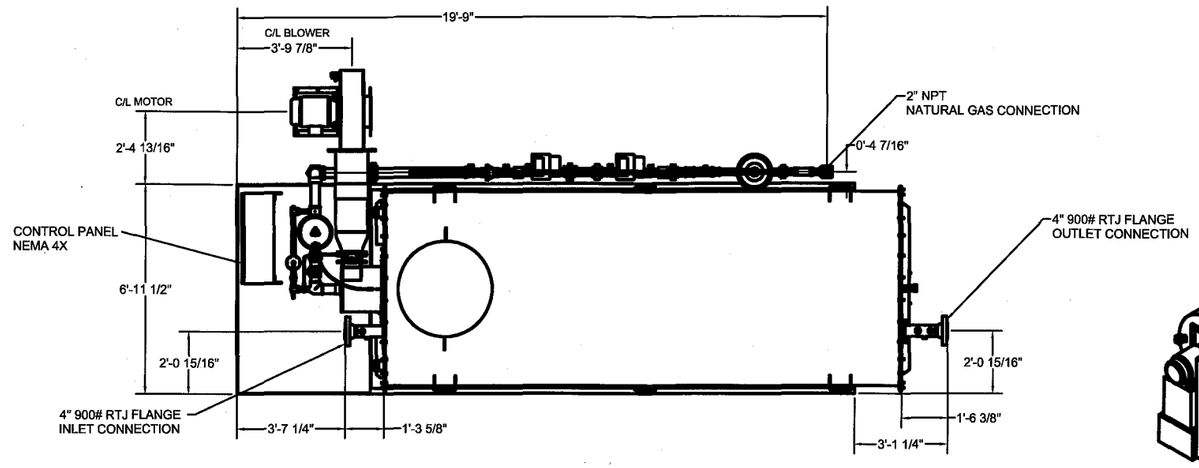


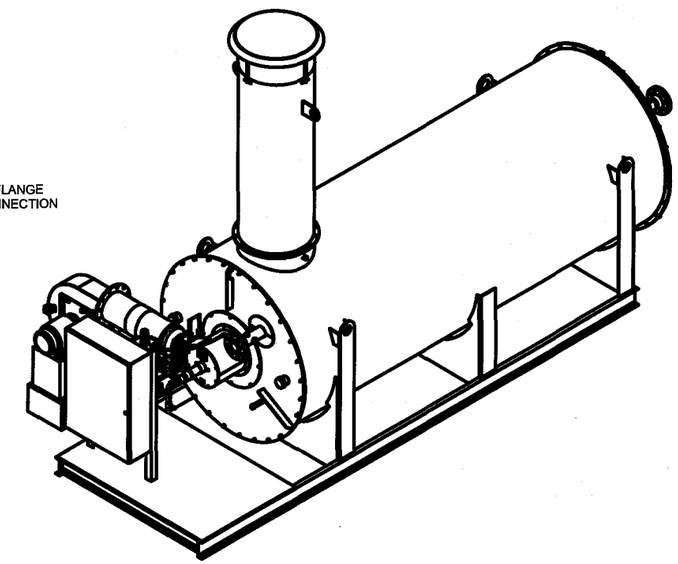

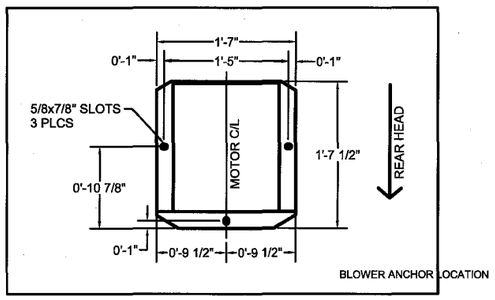


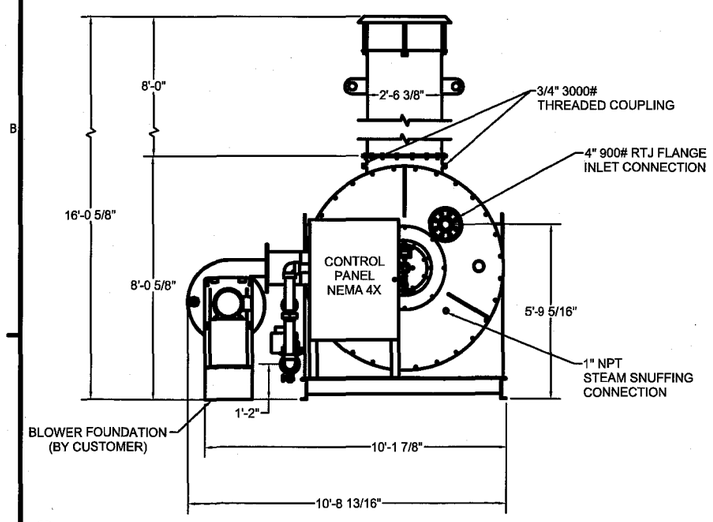


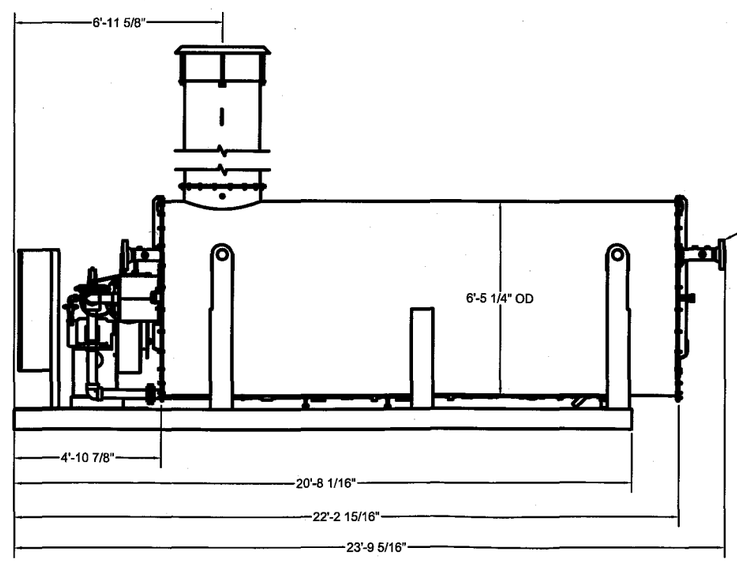


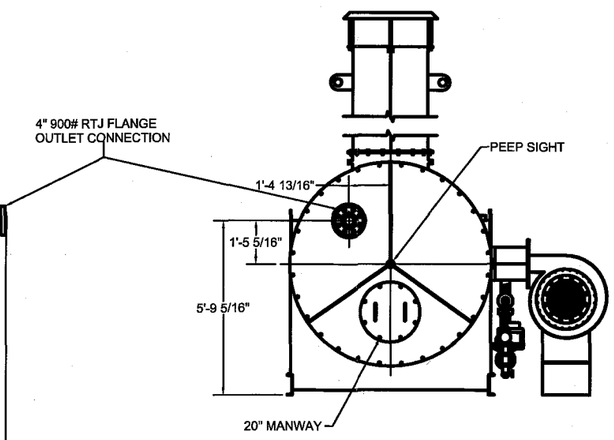


**APPROVED FOR CONSTRUCTION**

THOMAS RUSSELL CO. PO: 250-13
TRCO. JOB NUMBER: TRJ-250
TAG NUMBER: H-741
REGEN GAS HEATER

| | |
|---|---|
| CUSTOMER: THOMAS RUSSELL | JOB#: HI 11-038 |
| DRAWING NAME: GENERAL ARRANGEMENT HCI 5010-40-G | WO#: 11-038-000 |
| | ISSUE DATE: |

HEATEC INC. an Astec company
P.O. BOX 72760 CHATTANOOGA, TN 37407
PHONE: (423) 821-5200 FAX: (423) 821-7673

| DWG. DATE: | CHK DATE: | APPR. DATE: | |
|---|---|---|---|
| 02-04-2011 MRP | | | |
| DWG.PART#: 11038 - GA | | REV.: 0 | SCALE: NA / WEIGHT: NA |

TOLERENCE IS +/- 1/16" UNLESS OTHERWISE NOTED.

THIS DRAWING AND THE DESIGN SHOWN THEREON IS THE PROPERTY OF HEATEC INC. AND THE USE OR COPIES THEREOF CANNOT BE MADE WITHOUT WRITTEN CONSENT.

C:\Heatec-Vault\Job Files\2011\038 THOMAS RUSSELL\11038 - GA GENERAL ARRNGT IDW.idw

| Parts List | | | |
|---|---|---|---|
| ITEM | QTY | PART NUMBER | DESCRIPTION |
| 10 | 1 | PRJ10057834 | Burner, Winnox 0850, Natural Gas, Horizontal Firing, L.H. Piping, 9 O'Clock Weld |

NOTES:

1. FUEL TYPE: NATURAL GAS
2. MAXIMUM BURNER INPUT: 9.5 MMBTU/hr*
3. MINIMUM BURNER INPUT: 500,000 BTU/hr
4. AIR INLET PRESSURE: 28.7" W.C.*
5. INLET GAS PRESSURE @ RATIO REGULATOR: 55.4-110" W.C.
6. VOLTAGE: N/A
7. ACTUATOR IS SUPPLIED AND INSTALLED BY OTHERS, ECLIPSE IS TO PROVIDE BRACKET KIT FOR HONEYWELL ACTUATOR (MODEL M7284C-1000 OR SIMILAR).
8. UV SCANNER IS SUPPLIED AND INSTALLED BY OTHERS.
9. FOLLOWING ITEMS WILL BE SHIPPED LOOSE WITH THIS ORDER.
   a) SMJ10.202769_1-202AA32X BLOWER, SMJ, V1.0, CONFIGURED PRODUCT
   b) 302050-4 ORIFICE, METERING, 3 in. STRIPPED, 1.781 DIAMETER
   c) 302054 KIT, FLANGE, 3 in. 12fom
   d) 302053 KIT, FLANGE, 3/4 in. THRU 3 in. METERING ORIFICE
   e) 100205-22 IGNITER, SELF-GROUNDING, 590mm LONG, 1/2 in. NPT

* VALUES ARE BASED ON OPERATING CONDITION @70°F & 2000 Feet ASL.

Per Heatec, Built for Nox= 40 ppm and CO= 50 ppm

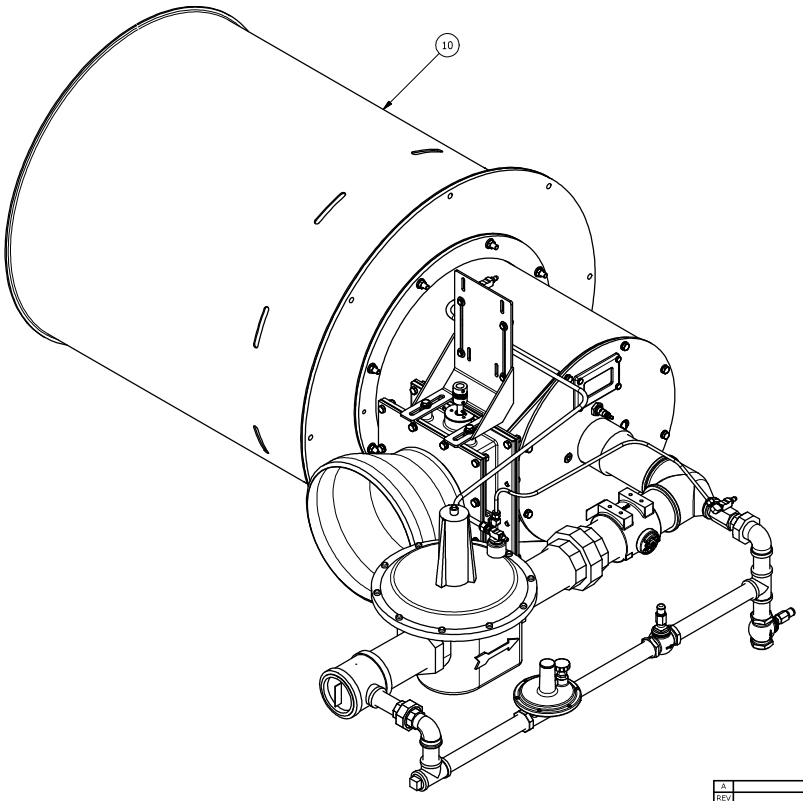


| SHIPPING INFORMATION | |
|---|---|
| WEIGHT: | 814 Lbs [370 Kg] |
| LENGTH: | 1892 [74,5] |
| WIDTH: | 1438 [56,6] |
| HEIGHT: | 871 [34,3] |

| REV | DESCRIPTION | DATE | APPROVED |
|---|---|---|---|
| A | MOD106710 | 06/23/2011 | DJV/HSK |

REVISION HISTORY

THE INFORMATION HEREON IS THE PROPERTY OF ECLIPSE, WITHOUT WRITTEN PERMISSION, ANY COPYING, TRANSMITTAL TO OTHERS, AND ANY USE EXCEPT THAT FOR WHICH IT IS LOANED, IS PROHIBITED.

ECLIPSE®

Burner, Winnox 0850, Natural Gas, Customer Level, Horizontal Firing, L.H. Piping

THIRD ANGLE PROJECTION

SIZE A1 | DWG NO PRJ10057833

SCALE: NONE | REF: PRJ10057667 | UNITS: mm[in] | SHEET 1 OF 2

**HEATEC JOB #11-038-000**

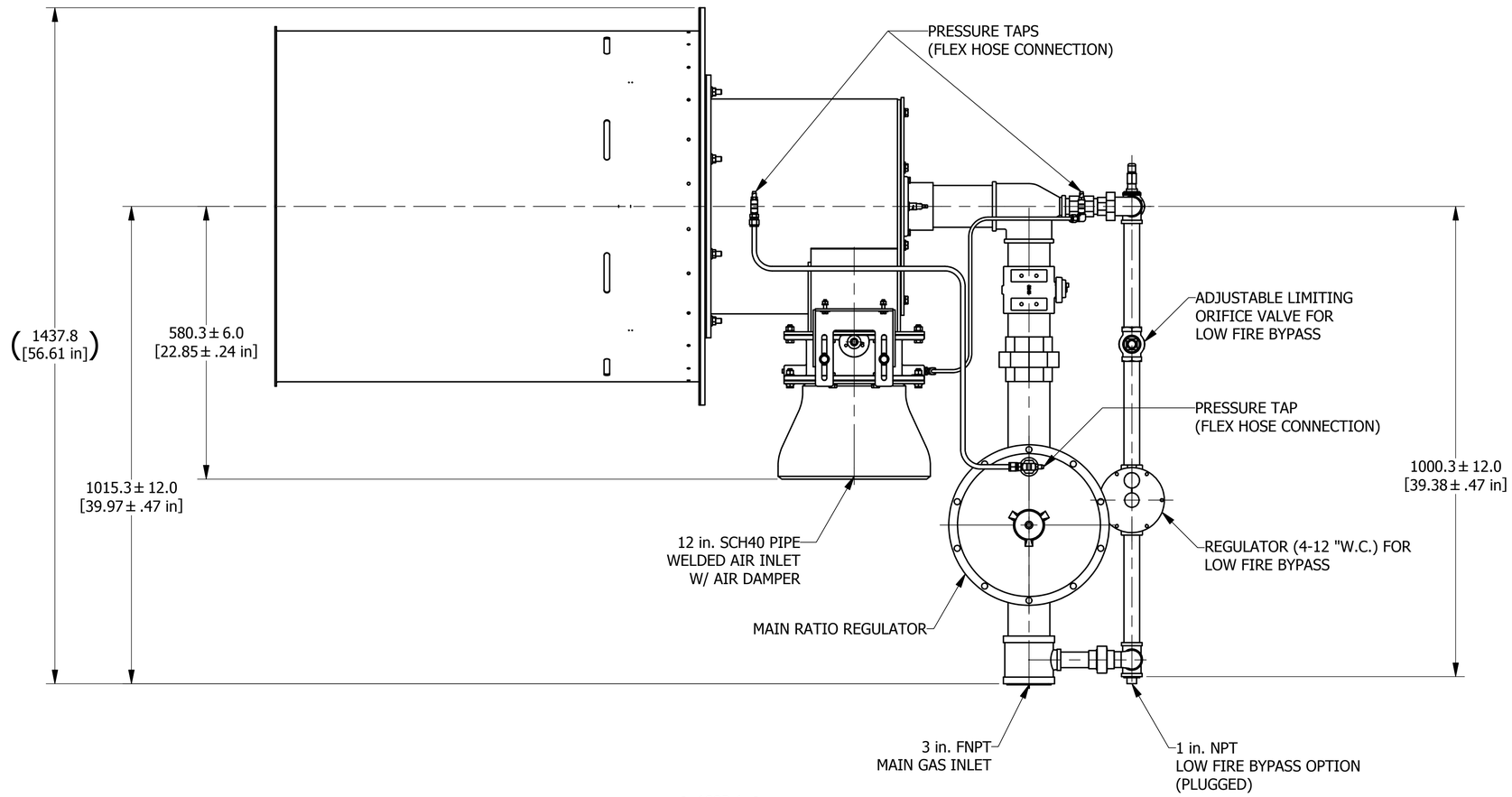


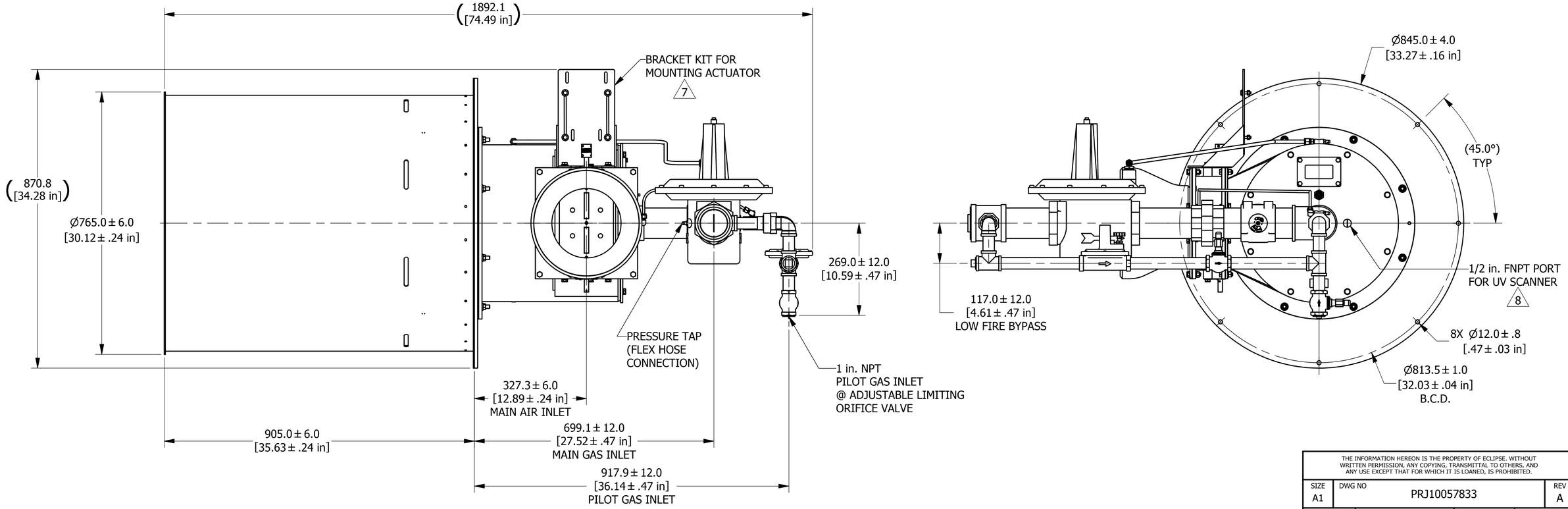


THE INFORMATION HEREON IS THE PROPERTY OF ECLIPSE. WITHOUT WRITTEN PERMISSION, ANY COPYING, TRANSMITTAL TO OTHERS, AND ANY USE EXCEPT THAT FOR WHICH IT IS LOANED, IS PROHIBITED.

| SIZE | DWG NO | REV |
|---|---|---|
| A1 | PRJ10057833 | A |

SCALE: NONE | UNITS: mm[in] | SHEET 2 OF 2

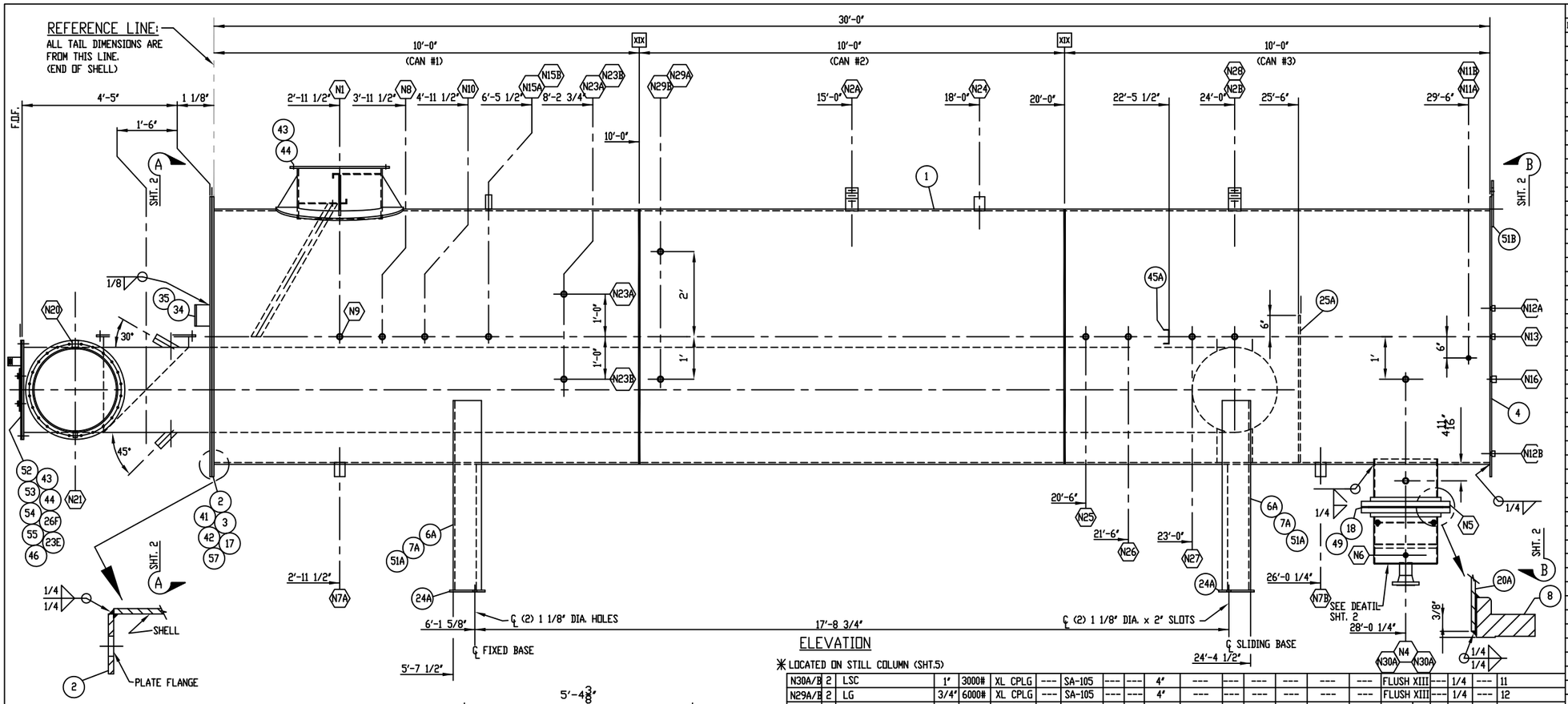


ELEVATION

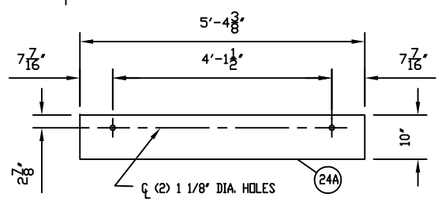


FIXED BASE DETAIL
(1) REQ'D.

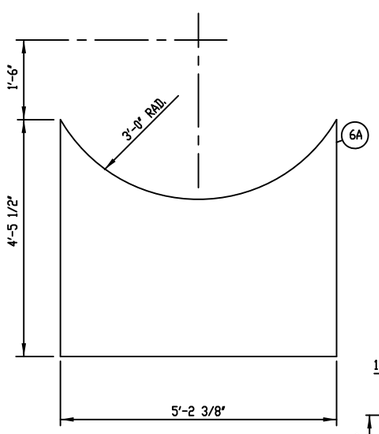


SADDLE DETAIL
(2) REQ'D.

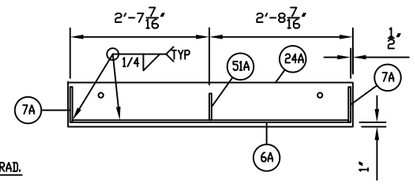


SADDLE PLACEMENT DETAIL
(1) REQ'D.

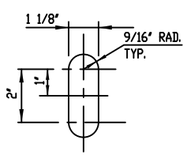


SLOT DETAIL

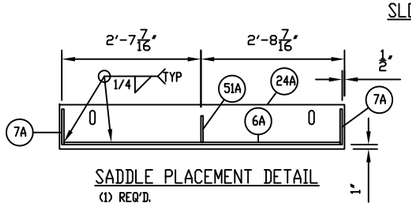


SADDLE PLACEMENT DETAIL
(1) REQ'D.

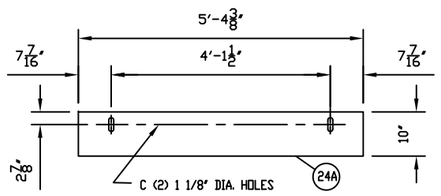


SLIDING BASE DETAIL
(1) REQ'D.

✳ LOCATED ON STILL COLUMN (SHT.5)

| MARK | QTY | SERVICE | SIZE | RATING | TYPE | BORE | MATERIAL | NECK SCH | NECK WALL | NECK LENGTH | NECK MATERIAL | REPAD THK | REPAD WIDTH | REPAD OD | REPAD MATERIAL | PROJECTION OUTSIDE | PROJECTION INSIDE | WELD DETAIL NUMBER | WELD SIZE A | WELD SIZE C | B.O.M. ITEM NO. |
|---|---|---|---|---|---|---|---|---|---|---|---|---|---|---|---|---|---|---|---|---|---|
| N30A/B | 2 | LSC | 1" | 3000# | XL CPLG | --- | SA-105 | --- | --- | 4" | --- | --- | --- | --- | --- | --- | FLUSH | XIII | 1/4 | --- | 11 |
| N29A/B | 2 | LG | 3/4" | 6000# | XL CPLG | --- | SA-105 | --- | --- | 4" | --- | --- | --- | --- | --- | --- | FLUSH | XIII | 1/4 | --- | 12 |
| N28 | 1 | T.I.T. | 1" | 3000# | XL CPLG | --- | SA-105 | --- | --- | 4" | --- | --- | --- | --- | --- | --- | FLUSH | XIII | 1/4 | --- | 11 |
| N27 | 1 | TEMP. CONT. | 1" | 3000# | XL CPLG | --- | SA-105 | --- | --- | 4" | --- | --- | --- | --- | --- | --- | FLUSH | XIII | 1/4 | --- | 11 |
| N26 | 1 | TEMP. IND. | 3/4" | 6000# | XL CPLG | --- | SA-105 | --- | --- | 4" | --- | --- | --- | --- | --- | --- | FLUSH | XIII | 1/4 | --- | 12 |
| N25 | 1 | TEMP. SAFETY HIGH | 1" | 3000# | XL CPLG | --- | SA-105 | --- | --- | 4" | --- | --- | --- | --- | --- | --- | FLUSH | XIII | 1/4 | --- | 11 |
| N24 | 1 | RELIEF | 2" | 3000# | XL CPLG | --- | SA-105 | --- | --- | 4" | --- | --- | --- | --- | --- | --- | FLUSH | XIII | 1/4 | --- | 10 |
| N23A/B | 2 | LSL | 1" | 3000# | XL CPLG | --- | SA-105 | --- | --- | 4" | --- | --- | --- | --- | --- | --- | FLUSH | XIII | 1/4 | --- | 11 |
| N22 | 1 | VAPOR INLET | 2" | 3000# | TOL | --- | SA-105 | --- | --- | --- | --- | --- | --- | --- | --- | --- | --- | XVI | 1/4 | --- | 50 |
| N21 | 1 | PILOT | 1/2" | 3000# | COUPLING | --- | SA-105 | --- | --- | --- | --- | --- | --- | --- | --- | --- | FLUSH | XIII | 1/4 | --- | 16 |
| N20 | 1 | BURNER FEED | 1 1/4" | 3000# | COUPLING | --- | SA-105 | --- | --- | --- | --- | --- | --- | --- | --- | --- | FLUSH | XIII | 1/4 | --- | 39 |
| N19 | 1 | COIL OUTLET ✳ | 2" | 600# | RFWN | 1.939" | SA-105 | 80 | .218" | --- | --- | --- | --- | --- | --- | 6" | --- | I | IX | 1/4 | --- | 23C,37 |
| N18 | 1 | COIL INLET ✳ | 2" | 600# | RFWN | 1.939" | SA-105 | 80 | .218" | --- | --- | --- | --- | --- | --- | 6" | --- | I | IX | 1/4 | --- | 23C,37 |
| N17 | 1 | T.I. ✳ | 1" | 3000# | COUPLET | --- | SA-105 | --- | --- | --- | --- | --- | --- | --- | --- | --- | --- | XV | --- | 1/4 | --- | 13 |
| N16 | 1 | GLYCOL RETURN | 1" | 3000# | COUPLET | --- | SA-105 | --- | --- | --- | --- | --- | --- | --- | --- | --- | --- | XV | --- | 1/4 | --- | 13 |
| N15A/B | 2 | LSH | 1" | 3000# | XL CPLG | --- | SA-105 | --- | --- | 4" | --- | --- | --- | --- | --- | --- | FLUSH | XIII | --- | 1/4 | --- | 11 |
| N14 | 1 | VAPOR OUTLET ✳ | 6" | 150# | RFWN | --- | SA-105 | 40 | .280" | 3.375" | --- | --- | --- | --- | --- | 6" | --- | III | IX | 1/4 | --- | 40,33A |
| N13 | 1 | SKIMMER | 1/2" | 6000# | COUPLET | --- | SA-105 | --- | --- | --- | --- | --- | --- | --- | --- | --- | --- | XV | --- | 1/4 | --- | 14 |
| N12A/B | 2 | LEVEL GAGE | 1/2" | 6000# | COUPLET | --- | SA-105 | --- | --- | --- | --- | --- | --- | --- | --- | --- | --- | XV | --- | 1/4 | --- | 14 |
| N11A/B | 1 | PREHEAT IN/OUT | 1" | --- | PIPE | .957" | SA-106-B | 80 | .179" | 67 1/8" | SA-106-B | --- | --- | --- | --- | SEE VIEW B-B | --- | I | --- | 1/8 | --- | 22B |
| N10 | 1 | SPARE | 1" | 3000# | XL CPLG | --- | SA-105 | --- | --- | 4" | --- | --- | --- | --- | --- | --- | FLUSH | XIII | --- | 1/4 | --- | 11 |
| N9 | 1 | SPARE | 1" | 3000# | XL CPLG | --- | SA-105 | --- | --- | 4" | --- | --- | --- | --- | --- | --- | FLUSH | XIII | --- | 1/4 | --- | 11 |
| N8 | 1 | SPARE | 3/4" | 6000# | XL CPLG | --- | SA-105 | --- | --- | 4" | --- | --- | --- | --- | --- | --- | FLUSH | XIII | --- | 1/4 | --- | 12 |
| N7A/B | 2 | DRAIN | 2" | 3000# | XL CPLG | --- | SA-105 | --- | --- | 4" | --- | --- | --- | --- | --- | --- | FLUSH | XIII | --- | 1/4 | --- | 10 |
| N6 | 1 | STRIPING GAS INLET | 1" | --- | PIPE | .957" | SA-106-B | 80 | .179" | 20 3/4" | SA-106-B | --- | --- | --- | --- | 4" | --- | I | --- | 1/8 | --- | 22A |
| N5 | 1 | STRIPING GAS BOOT | 18" | 150# | RFSO | --- | SA-105 | 10 | .25" | 13 3/8" | SA-53-B | --- | --- | --- | --- | SEE VIEW B-B | --- | X | III | 1/4 | --- | 8,18,20A,49 |
| N4 | 1 | GLYCOL OUTLET | 3" | 150# | RFWN | 3.068" | SA-105 | 40 | .216" | 3 5/8" | SA-53-B | --- | --- | --- | --- | 6" | --- | III | IX | 1/4 | --- | 9,21B |
| N3 | 1 | GLYCOL INLET ✳ | 3" | 150# | RFWN | 3.068" | SA-105 | 40 | .216" | 3 5/8" | SA-53-B | --- | --- | --- | --- | 6" | --- | III | IX | 1/4 | --- | 9,21B |
| N2A/B | 2 | FILL CONN. | 3" | --- | PIPE | 2.9" | SA-53-B | 40 | .216" | 4 3/4" | SA-53-B | --- | --- | --- | --- | 4" | --- | I | --- | 1/4 | --- | 21A |
| N1 | 1 | STILL COLUMN NECK | 24" | --- | PIPE | 23.5" | SA-53-B | 10 | .25" | 14.25" | SA-53-B | .5" | 6" | 36" | SA-36 | SEE VIEW A-A | --- | IV | --- | 1/4 | 1/4 | 5,19E,6B,6C,6D |

SCHEDULE OF OPENINGS

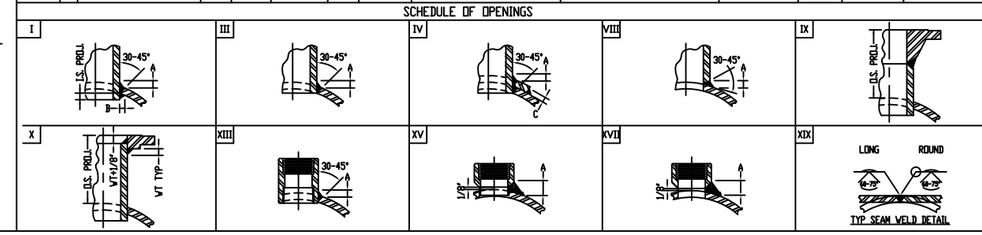


BILL OF MATERIALS

| ITEM | QTY | DESCRIPTION | SPEC | PART NO. |
|---|---|---|---|---|
| 1 | 1 EA | R&W CYLINDER, 72" O.D. x 1/2" THK. x 30'-0" LG P.B.E. | SA-36 | 2300615 |
| 2 | 1 EA | SHELL FLANGE RING, 79" O.D. x 72" I.D. x 1/2" THK. W/ | SA-36 | 3900957 |
| | | (80) 11/16" DIA. HOLES ON 77" DIA. BOLT CIRCLE | | |
| 3 | 1 EA | COVER PLATE FLANGE, 79" O.D. x 1/2" THK. WITH | SA-36 | 3900958 |
| | | (80) 11/16" DIA. HOLES ON 77" DIA. BOLT CIRCLE | | |
| 4 | 1 EA | END PLATE FLANGE, 75" O.D. x 1/2" THK. | SA-36 | 3900959 |
| 5 | 7 EA | PLATE FLANGE, 28" O.D. x 24" I.D. x 1/2" THK. W/ | SA-36 | 3900960 |
| | | (24) 9/16" DIA. HOLES ON A 26" DIA. BOLT CIRCLE | | |
| 6 | 6675 $in^2$ | PLATE, 1/2" | SA-36 | 2800230 |
| 7 | 18 LF | FLATBAR, 1/2" x 8" | SA-36 | 2900110 |
| 8 | 2 EA | FLANGE, 18" 150# RFSO | SA-105 | 1300224 |
| 9 | 2 EA | FLANGE, 3" 150# RFWN S/40 BORE | SA-105 | 1300083 |
| 10 | 3 EA | X-LONG COUPLING, 2" 3000# SCR'D x 4" LG. | SA-105 | 0800078 |
| 11 | 10 EA | X-LONG COUPLING, 1" 3000# SCR'D x 4" LG. | SA-105 | 0800042 |
| 12 | 3 EA | X-LONG COUPLING, 3/4" 6000# SCR'D x 4" LG. | SA-105 | 0800033 |
| 13 | 2 EA | COUPLET, 1" 3000# SCR'D | SA-105 | 0800044 |
| 14 | 3 EA | COUPLET, 1/2" 6000# SCR'D. | SA-105 | 0800018 |
| 15 | 5 EA | GSKT., 28" O.D. x 24" I.D. x 1/8" THK W/(24) 9/16" | NON-ASB. | 1400324 |
| | | HOLES ON A 26" DIA. BOLT CIRCLE | | |
| 16 | 1 EA | COUPLING, 1/2" 6000# SCR'D. FULL | SA-105 | 0800015 |
| 17 | 1 EA | GSKT., 79" O.D. x 72" I.D. x 1/8" THK W/(80) 11/16" | NON-ASB. | 1400325 |
| | | HOLES ON A 77" DIA. BOLT CIRCLE | | |
| 18 | 1 EA | GSKT., 18" 150# RF FLEX. | 304 SS | 1400015 |
| 19 | 92 LF | PIPE, 24" S/10 (.25" W.T.) ERW | SA-53-E/B | 2200052 |
| 20 | 2.5 LF | PIPE, 18" S/10 (.25" W.T.) ERW | SA-53-E/B | 2200044 |
| 21 | 1.4 LF | PIPE, 3" S/40 (.216" W.T.) SMLS. | SA-106-B | 2300042 |
| 22 | 8.4 LF | PIPE, 1" S/80 (.179" W.T.) SMLS. | SA-106-B | 2300018 |
| 23 | 48.5 LF | PIPE, 2" S/80 (.218" W.T.) SMLS. | SA-106-B | 2300149 |
| 24 | 11.6 LF | FLATBAR, 1/2" x 10" | SA-36 | 2900790 |
| 25 | 2976 $in^2$ | PLATE, 3/8" | SA-36 | 2800229 |
| 26 | 2833 $in^2$ | PLATE, 1/4" | SA-36 | 2800227 |
| 27 | 10% | GRATING, 1" x 3/16" x 3'-0" WIDE x 20'-0" LG. | SA-36 | 3600068 |
| 28 | 36% | EXPANDED METAL, 3/4" , 9GA. FLAT x 48" x 96" | SA-36 | 3600051 |
| 29 | 8 EA | HEX NUT, 3/8" Z.P. | GR-5 | 0300002 |
| 30 | 8 EA | FLAT WASHER, 3/8" | P1 | 0300003 |
| 31 | 4 EA | HEX BOLT, 3/8" x 1 1/2" LG. Z.P. | GR-5 | 0300211 |
| 32 | 4 EA | HEX BOLT, 3/8" x 2 1/2" LG. Z.P. | GR-5 | 0300123 |
| 33 | .5 LF | PIPE, 6" S/40 (.280" W.T.) SMLS | SA-106-B | 2300058 |
| 34 | 1 EA | NAMEPLATE BRACKET, W8 x 28 x 6" LG. (HALF CUT) | SA-36 | 3900081 |
| 35 | 1 EA | NAMEPLATE, 3" x 5" x .064", 2-COLOR, REBOILER | S.STL. | 3900169 |
| 36 | 17 CU.FT. | PACKING, 1" PALL RINGS | S.STL. | 3600043 |
| 37 | 2 EA | FLANGE, 2" 600# RFWN S/80 BORE | SA-105 | 1300052 |
| 38 | 19 EA | RETURN BEND, 2" S/80 180° S.R. | SA-234-WPB | 1100028 |
| 39 | 1 EA | COUPLING, 1 1/4" 3000# SCR'D. FULL | SA-105 | 0800056 |
| 40 | 1 EA | FLANGE, 6" 150# RFWN S/40 BORE | SA-105 | 1300120 |
| 41 | 80 EA | CAPSCREW, 5/8" x 2" LG. Z.P. | GR-8 | 0300160 |
| 42 | 80 EA | HEX NUT, 5/8" | GR-8 | 0300020 |
| 43 | 120 EA | CAPSCREW, 1/2" x 1 3/4" LG. Z.P. | GR-5 | 0300081 |
| 44 | 120 EA | HEX NUT, 1/2" Z.P. | GR-5 | 0300010 |
| 45 | 5.9 LF | CHANNEL, 4" X 4.1#, | SA-36 | 2900203 |
| 46 | 1 EA | GSKT., 12" O.D. x 10" I.D. x 1/8" THK W/(4) 7/16" | NON-ASB. | 1400345 |
| | | HOLES ON A 11" DIA. BOLT CIRCLE | | |
| 47 | 10 LF | FLATBAR, 1/4" x 6" | SA-36 | 2900085 |
| 48 | 1 EA | STILL COLUMN BLIND FLANGE, 28" O.D. x 1/2" THK. W/ | SA-36 | 3900961 |
| | | (24) 9/16" DIA. HOLES ON A 26" DIA. BOLT CIRCLE | | |
| 49 | 16 EA | STUD, 1 1/8" x 6 1/4" LG W/NUTS | SA-193-B7 SA-193-B7 | 3000395 |
| 50 | 1 EA | THREDOLET, 2", 3000# 36-8 FS SCR, | SA-105 | 0800081 |
| 51 | 7 LF | FLATBAR, 1/2" x 6" | SA-36 | 2900109 |
| 52 | 1 EA | FIRETUBE BLIND FLANGE, 28" O.D. x 1/4" THK. W/ | SA-36 | 3900398 |
| | | (24) 9/16" DIA. HOLES ON A 26" DIA. BOLT CIRCLE | | |
| 53 | 4 EA | HEX BOLT, 3/8" x 1 1/4" LG. Z.P. | GR-5 | 0300370 |
| 54 | 4 EA | WING NUT, 3/8" Z.P. | GR-5 | 0300369 |
| 55 | 4 EA | LOCK WASHER, 3/8" Z.P. | GR-5 | 0300368 |
| 56 | 1 EA | XXL COUPLING, 2" X 6" LG., 3000# FS SCR (FIRE EYE) | SA-105 | 0800079 |
| 57 | 160 EA | FLAT WASHER, 5/8" | 304 SS | 0300276 |

REVISION

| | | | |
|---|---|---|---|
| A | 8-11-11 | RC | ISSUED FOR APPROVAL |

NOTES

1. USE WELD PROCEDURE WPS-1A
2. ALL WELDS SHALL BE 1/4 CONT. FILLET WELDS UNLESS NOTED.
3. AIR TEST SHELL TO 5 PSIG.
4. AIR TEST FIRETUBE TO 5 PSIG.
5. PAINT: J.W.W. STANDARD
6. ALL BOLT THREADS TO FACE OUT FROM SHELL.
7. ALL NOZZLE REPADS SHALL HAVE AT LEAST ONE 7/16" DIA. WEEP HOLE THAT MAY BE TAPPED FOR 1/4" N.P.T.
8. ALL BOLT HOLES SHALL STRADDLE C'S.

NAMEPLATE DATA

GLYCOL REBOILER

SERIAL NUMBER ____
YEAR BUILT 2011
WEIGHT EMPTY, LBS. 24,000 LBS.
FIRETUBE RATING, BTU/HR 3.0MM
FIRETUBE AREA, SQ FT 314
SIZE 72 O.D. x 30'-0"
FULL CAP. = 5,142 GAL.

J.W. WILLIAMS INC. a FLINT Company — CASPER, WYOMING / WALLER, TEXAS

J.W. WILLIAMS INC.
a FLINT Company
P.O. BOX 1178
WALLER, TEXAS
936-931-2424

FABRICATION & FIELD SERVICE

3.0MM BTU/HR REBOILER WITH STRIPPING GAS
72" O.D. x 30'-0"

| QTY | DATE | JOB |
|---|---|---|
| 1 | SEPT2011 | 27366 |

| | | | |
|---|---|---|---|
| DRAWN: | RC | DATE: | 8/11/11 |
| CHK: | GF | DATE: | 8/11/11 |
| SCALE: | N.T.S. | SHEET: | 1 OF 5 |

DWG NO 72-30-RB-SOUTH TEX
REV A

THIS DRAWING IS PROPERTY OF J.W. WILLIAMS, INC. A FLINT COMPANY, AND IS NOT TO BE LOANED, COPIED OR REPRODUCED IN ANY WAY WITHOUT THE WRITTEN CONSENT OF J.W. WILLIAMS, INC.

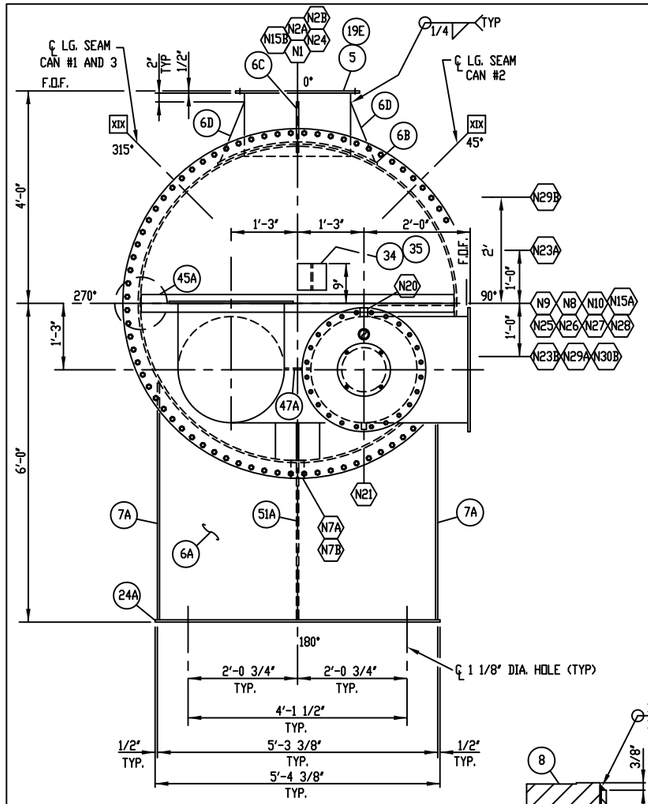


VIEW "A-A"
FROM SHT. 1

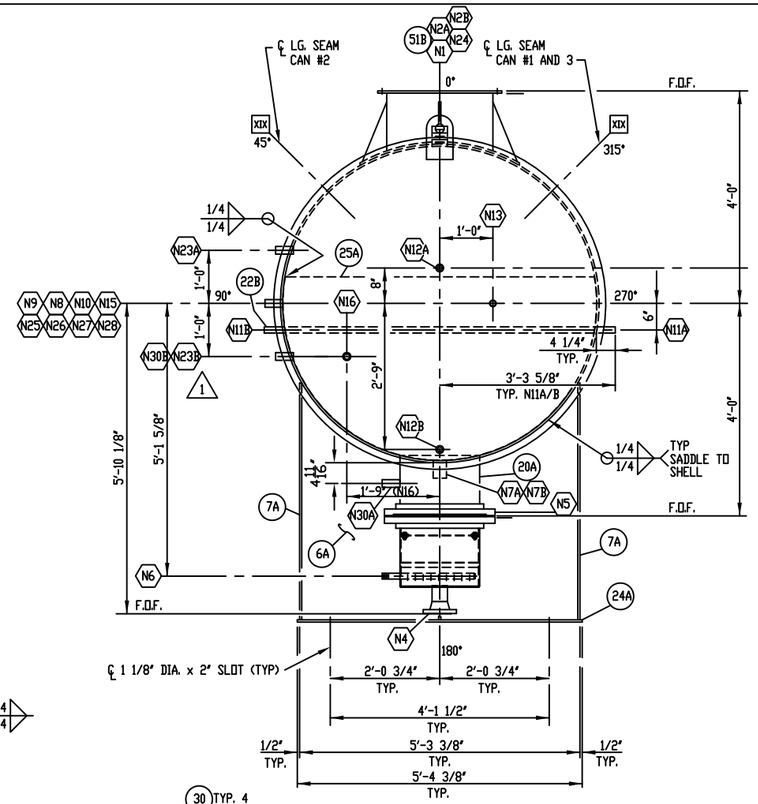


VIEW "B-B"
FROM SHT. 1

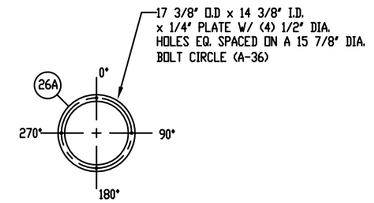


UPPER PACKING RETAINING RING

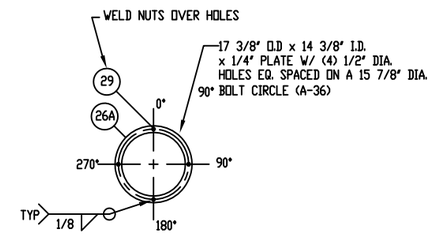


LOWER PACKING RETAINING RING

| MATERIAL CUT LIST | | | | |
|---|---|---|---|---|
| ITEM | QTY | SERVICE | DESCRIPTION | SPEC |
| 6A | 2 | SADDLE | PLATE, 1/2" x 4'-5 1/2" x 5'-2 3/8" LG. | SA-36 |
| 6B | 1 | N1 PAD | PLATE, 1/2" x 3'-0" O.D. x 2'-0 1/8" I.D. | SA-36 |
| 6C | 2 | N1 GUSSET | PLATE, 1/2" x 5 1/2" x 9" LG. | SA-36 |
| 6D | 2 | N1 GUSSET | PLATE, 1/2" x 5 1/2" x 1'-1 1/2" LG. | SA-36 |
| 7A | 4 | SADDLE | FLATBAR, 1/2" x 8" x 4'-5 1/2" LG. | SA-36 |
| 19A | 1 | FIRETUBE | PIPE, 24" S/10 (.25" W.T.) x 29'-5 5/8" LG. P.B.E. | SA-53-E/B |
| 19B | 1 | FIRETUBE | PIPE, 24" S/10 (.25" W.T.) x 4'-6" LG. P.B.E. | SA-53-E/B |
| 19C | 1 | FIRETUBE | PIPE, 24" S/10 (.25" W.T.) x 27'-7 1/8" LG. P.B.E. | SA-53-E/B |
| 19D | 1 | FIRETUBE | PIPE, 24" S/10 (.25" W.T.) x 2'-3" LG. P.B.E. | SA-53-E/B |
| 19E | 1 | N1 | PIPE, 24" S/10 (.25" W.T.) x 1'-2 1/4" LG. P.B.E. | SA-53-E/B |
| 19F | 1 | STACK | PIPE, 24" S/10 (.25" W.T.) x 13'-11 1/2" LG. P.B.E. | SA-53-E/B |
| 19G | 1 | STILL CLMN. | PIPE, 24" S/10 (.25" W.T.) x 9'-11" LG. P.B.E. | SA-53-E/B |
| 19H | 1 | FIRETUBE | PIPE, 24" S/10 (.25" W.T.) x 1'-11 1/2" LG. P.B.E. | SA-53-E/B |
| 20A | 1 | N5 | PIPE, 18" S/10 (.25" W.T.) x 1'-1 3/8" LG. P.B.E. | SA-53-E/B |
| 20B | 1 | N5 | PIPE, 18" S/10 (.25" W.T.) x 1'-3 3/8" LG. P.B.E. | SA-53-E/B |
| 21A | 2 | N2A/B | PIPE, 3" S/40 (.216" W.T.) x 4 3/4" LG. T.O.E., P.O.E. | SA-106-B |
| 21B | 2 | N3,N4 | PIPE, 3" S/40 (.216" W.T.) x 3 5/8" LG. B.O.E., P.O.E. | SA-106-B |
| 22A | 1 | N6 | PIPE, 1" S/80 (.179" W.T.) x 1'-8 3/4" LG. T.O.E., P.O.E. | SA-106-B |
| 22B | 1 | N11A/B | PIPE, 1" S/80 (.179" W.T.) x 6'-7 5/16" LG. T.B.E. | SA-106-B |
| 23A | 1 | STILL CLMN. | PIPE, 2" S/80 (.218" W.T.) x 3'-7 5/16" LG. P.B.E. | SA-106-B |
| 23B | 1 | IGNITOR | PIPE, 2" S/80 (.218" W.T.) x 6 3/8" LG. T.O.E., P.O.E. | SA-106-B |
| 23C | 2 | REFLUX COIL | PIPE, 2" S/80 (.218" W.T.) x 3'-10 15/16" LG. B.B.E. | SA-106-B |
| 23D | 18 | REFLUX COIL | PIPE, 2" S/80 (.218" W.T.) x 2'-0" LG. B.B.E. | SA-106-B |
| 23E | 1 | PEEP SIGHT | PIPE, 2" S/80 (.218" W.T.) x 4" LG. T.O.E.x P.O.E. | SA-106-B |
| 24A | 1 | BASE | FLATBAR, 1/2" x 10" x 5'-4 3/8" LG. | SA-36 |
| 24B | 1 | FIRETUBE SUPPORT | FLATBAR, 1/2" x 10" x 9 1/2" LG. | SA-36 |
| 24C | 1 | BASE | FLATBAR, 1/2" x 10" x 5'-4 3/8" LG. | SA-36 |
| 25A | 1 | WEIR | PLATE, 3/8" x 3'-5 11/16" x 5'-11 3/8" | SA-36 |
| 26A | 2 | BOOT RING | PLATE, 1/4" x 1'-5 3/8" O.D. x 1'-2 3/8" I.D. | SA-36 |
| 26B | 2 | STILL CLMN. | PLATE, 1/4" x 1'-11 3/8" x 1'-2 7/16" | SA-36 |
| 26C | 2 | STILL CLMN. RING | PLATE, 1/4" x 1'-11 3/8" O.D. x 1'-8 3/8" I.D. | SA-36 |
| 26D | 1 | N6 | PLATE, 1/4" x 1 1/4" DIA. | SA-36 |
| 26E | 1 | BOOT | PLATE, 1/4" x 1'-5 3/4" O.D. x 3 5/8" I.D. | SA-36 |
| 26F | 1 | FIRETUBE BLIND FLG. | PLATE, 1/4" x 12" O.D. | SA-36 |
| 27A | 1 | STRIP GAS BOOT | GRATING, 1" x 3/16" x 1'-5 3/8" O.D. | SA-36 |
| 27B | 2 | STILL CLMN. | GRATING, 1" x 3/16" x 1'-11 3/8" O.D. | SA-36 |
| 28A | 2 | STRIP GAS BOOT | EXPANDED METAL, 3/4" 9GA, FLAT x 1'-5 1/4" O.D. | SA-36 |
| 28B | 2 | STILL CLMN. | EXPANDED METAL, 3/4" 9GA, FLAT x 1'-11 1/4" O.D. | SA-36 |
| 33A | 1 | N14 | PIPE, 6" S/40 (.280" W.T.) x 3 3/8" LG. SMLS B.O.E. x P.O.E. | |
| 45A | 1 | FIRETUBE SUPPORT | CHANNEL, 4" X 5.4#, X 70-0 3/4" LG. | SA-36 |
| 47A | 1 | FIRETUBE | FLATBAR, 6" x 1/4" x 10'-0" LG. | SA-36 |
| 51A | 2 | SADDLE | FLATBAR, 1/2" x 6" x 2'-11 1/2" LG. | SA-36 |
| 51B | 1 | LIFT LUG | FLATBAR, 1/2" x 6" x 1'-1" LG. | SA-36 |

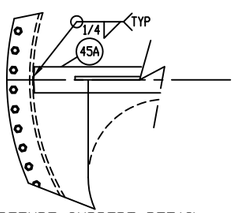


FIRETUBE SUPPORT DETAIL

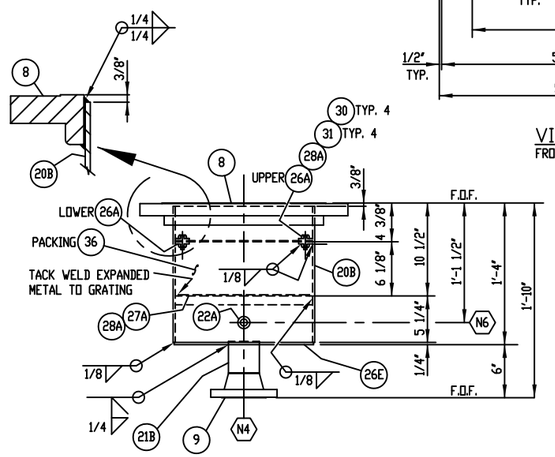


STRIPING GAS BOOT DETAIL
N.T.S.

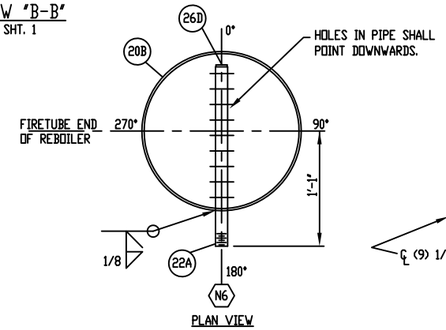


SPARGER ORIENTATION DETAIL
N.T.S.

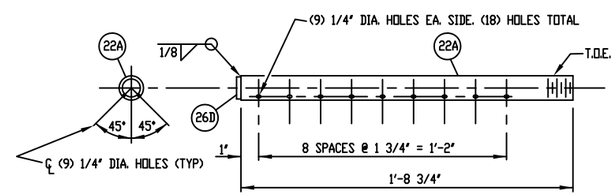


SPARGER PIPE DETAIL
N.T.S.

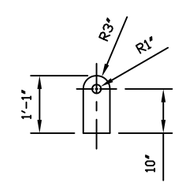

LIFT LUG DETAIL

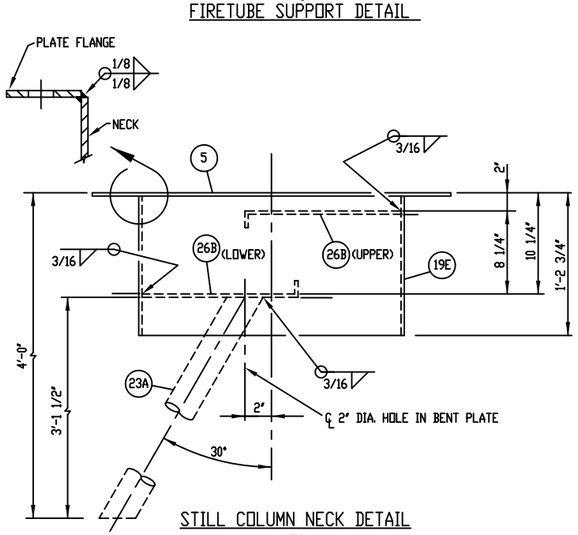


STILL COLUMN NECK DETAIL
N.T.S.

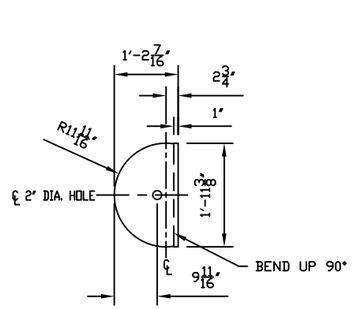


DETAIL ITEM 26B (LOWER)

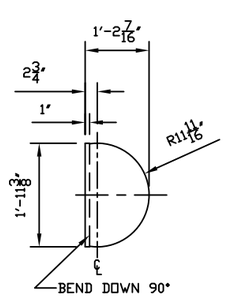


DETAIL ITEM 26B (UPPER)

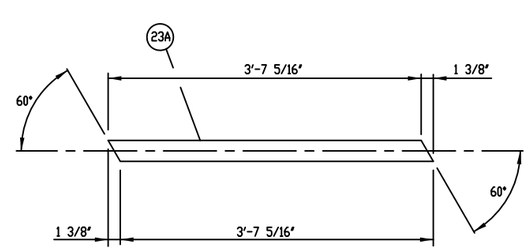

DETAIL ITEM 23A
N.T.S.

| REVISION | | | |
|---|---|---|---|
| REV | DATE | BY | DESCRIPTION |
| A | 8-10-11 | RC | ISSUED FOR APPROVAL |

J.W. WILLIAMS INC. a FLINT Company
P.O. BOX 1178 WALLER, TEXAS 936-931-2424
FABRICATION & FIELD SERVICE

3.0MM BTU/HR REBOILER WITH STRIPPING GAS
72" O.D. x 30'-0"

| QTY | DATE | JOB | | | | | |
|---|---|---|---|---|---|---|---|
| 1 | SEPT2011 | 27366 | DRAWN: RC | DATE: 8/11/11 | DWG NO | REV |
| | | | CHK: GF | DATE: 8/11/11 | 72-30-RB-SOUTH TEX | A |
| | | | SCALE: N.T.S. | SHEET: 2 OF 5 | | |

THIS DRAWING IS PROPERTY OF J.W. WILLIAMS, INC. A FLINT COMPANY, AND IS NOT TO BE LOANED, COPIED OR REPRODUCED IN ANY WAY WITHOUT THE WRITTEN CONSENT OF J.W. WILLIAMS, INC.

# THOMAS RUSSELL CO.

Tulsa, Oklahoma

| | | | |
|---|---|---|---|
| JOB NO: | 250 | DATE: | 9/21/2010 |
| CLIENT: | TRCo. | BY: | JRG |
| SUBJECT: | 200 MMscfd Cryo Plant | | |

## FIRED HEATER

| | | | |
|---|---|---|---|
| Service: | HMO Heater for E-207 | Tag No: | H-781 |
| Design Duty, MBTU/Hr | 17,400 | Type: | Helical Coil |
| No. of Coils per Unit | One | No. Units: One | Model: HCI-10010-40(D)-G |

| Fluid | | 50:50 TEG - Water | | Burners | | |
|---|---|---|---|---|---|---|
| | | Inlet | Outlet | | Gas | Oil |
| Liquids | Lbs/Hr | 333,142 | 333,142 | LHV (BTU/scf) | 973 | |
| Density | Lbs/CuFt | 64.15 | 62.56 | Mol. Wt. | 18.26 | |
| Molecular Weight | | 32.17 | 32.17 | Gravity | | |
| Specific Heat | BTU/Lb °F | 0.859 | 0.882 | Pressure Avail. (psig) | 100 | |
| Thermal Cond. | BTU/Hr-Ft-°F | 0.223 | 0.220 | Pressure Req'd (psig) | | |
| Viscosity | cP | 1.186 | 0.831 | Steam for Atomizing | | |
| Vapor | Lbs/Hr | 0 | 0 | Fuel Gas Req'd (MSCFD) | 539.10 | N/A |
| Density | Lbs/CuFt | | | Mfgr: | Eclipse Ratiomatic | |
| Molecular Weight | | | | Type: | Forced Draft - 40 HP Blower | |
| Specific Heat | BTU/Lb °F | | | Number Req'd | One | |
| Thermal Cond. | BTU/HrFt °F | | | Pilots Req'd (Note 4) | Yes, electrical ignition | |
| Viscosity | cP | | | NOx | < 75 ppmvd | |
| Operating Temp. | °F | 195 | 255 | **Structural Design** | | |
| Operating Pressure | PSIA | 90 | | Wind Load, MPH, (3) | | |
| Velocity | Ft/Sec | | 8 Calc. | Seismic Zone, (3) | | |
| Pressure Drop | PSI | 20 Allow. | 17 Calc. | Ambient, °F | -20 / 110 | |
| Fouling Resistance | SqFt*F/BTU | 0.0020 | | Elevation, Ft | 1300 | |
| Design Press. / Temp. | | 150 PSIG | 400 °F | **Stack Design** | | |
| Min. Design Mtl. Temp. | | -20 °F @ | 150 PSIG | Self-supporting | Yes | |
| Corrosion Allowance | | 0.125 | | Minimum Height | 8 ft above top of heater | |
| Insulation Thickness | | 3-5" high temp ceramic fiber | | Minimum Wall Thickness: | 0.125 | |
| Efficiency-Based on LHV | (%) | 82.0% | (Assume 3% Loss) | Lining Type | No | |
| Excess Air | | 15 | | Lining Thickness: | No | |
| Firebox Unit Heat Release | | 28,834 | BTU/Hr- Ft^3 | Damper: | No | |
| Number of Passes | | Two - Process, Two - Fireside | | | | |

| Coil Design | | Radiant | Convection-Bare | Convection-Finned | |
|---|---|---|---|---|---|
| Gas Temperature | In/Out | 195 / 255 | | | |
| Number Tubes | | Two | | | |
| Tube O.D. | In | 4" Sch 40 | | Inlet and Outlet | 8" 300# RFWN |
| Tube Length | Eff. Ft | ----- | | | |
| Bare Surface | Sq Ft | 1,453 | | | |
| Finned Surface | Sq Ft | N/A | | | |
| Avg. Heat Flux | BTU/Hr-Sq Ft | 15,235 | | | |
| Tube Materials | | SA- 106 Gr. B | SA- | SA- | |

| | | | | | | | |
|---|---|---|---|---|---|---|---|
| Convection Fins (inch): | Height: | Thickness: | No. / inch: | Material: | | | |
| Overall Dimension: | 25.9' L x 9.2' W x 10' H (Less Stack) | | | 30,000 lbs Dry Weight | | | |
| Code Requirements: | ASME VIII Div I | | Stamp: Yes | Nat'l Board: Yes | | | |

**Notes:**

1) Add 10% to duty and flow rates for design.
2) See attached Scope of Supply.
△ 3) Wind design per ASCE 7-10, Exposure C, CATIII. Seismic design per ASCE 7-10, I=1.25, Site D. , $S_S$ =40% , $S_1$ =8%
4) Add Spare ignitor

| REVISION | 3 | | △ 4 | | 1 | | 2 | |
|---|---|---|---|---|---|---|---|---|
| ENGINEER/DATE | JRG | 1/11/11 | MTR | 9/20/11 | GER | 11/22/10 | JRG | 1/10/11 |
| ISSUED FOR | Revised - Purchase | | Revised | | Revised | | Revised | |

## HEATER DESIGN DATA

INPUT: 26,318,977 BTU/HR

OUTPUT: 19,161,995 BTU/HR

FLOW RATE: 712 GPM

TRANSFER MEDIA: 50/50 TEG/WATER

HEATING SURFACE: 1,453 SQFT

DESIGN: 150 PSIG @ 400 DEG F

ASME CODE: SECT VIII, DIV. 1 2010 EDITION w/ NO ADDENDA

OUTLET MEDIA TEMPERATURE: 255 DEG F

LIQUID FILL: 812 GALLONS

PRESSURE DROP: 20 PSIG

## APPROX. SHIPPING WEIGHT:

| | |
|---|---|
| HEATER DRY WT: | 33,000 LBS |
| HEATER OPER. WT: | 41,000 LBS |
| PUMP/TANK SKID DRY WT: | 9,110 LBS |
| PUMP/TANK SKID OPER. WT: | 17,000 LBS |

TOTAL OPER. WEIGHT OF HEATER/PUMP SKID: 58,000 LBS

| | | | |
|---|---|---|---|
| | HEATEC ORDER INFO | HEATEC ORDER INFO | HEATEC ORDER INFO |
| | W.O.# 11-077-151 | W.O.# 11-127-151 | W.O.# 11-143-151 |
| | JOB# HI 11-077 | JOB# HI 11-127 | JOB# HI 11-143 |
| | ISSUE DATE: | ISSUE DATE: | ISSUE DATE: |
| | CODE: ☐ YES ☐ NO | CODE: ☐ YES ☐ NO | CODE: ☐ YES ☐ NO |
| HEATEC ORDER INFO | HEATEC ORDER INFO | HEATEC ORDER INFO | HEATEC ORDER INFO |
| W.O.# 11-041-151 | W.O.# 11-095-151 | W.O.# 11-129-151 | W.O.# 11-145-151 |
| JOB# HI 11-041 | JOB# HI 11-095 | JOB# HI 11-129 | JOB# HI 11-145 |
| ISSUE DATE: | ISSUE DATE: | ISSUE DATE: | ISSUE DATE: |
| CODE: ☐ YES ☐ NO | CODE: ☐ YES ☐ NO | CODE: ☐ YES ☐ NO | CODE: ☐ YES ☐ NO |

| | | | |
|---|---|---|---|
| | THOMAS RUSSELL CO. PO. 251-76<br>PROJECT NAME:<br>TRCO JOB NUMBER: TRJ 251<br>TAG NUMBER: H-781<br>HMO HEATER<br>HEATEC JOB NUMBER: HI 11-077 | THOMAS RUSSELL CO. PO. 257-76<br>PROJECT NAME:<br>TRCO JOB NUMBER: TRJ 257<br>TAG NUMBER: H-781<br>HMO HEATER<br>HEATEC JOB NUMBER: HI 11-127 | THOMAS RUSSELL CO. PO. 262-76<br>PROJECT NAME:<br>TRCO JOB NUMBER: TRJ 262<br>TAG NUMBER: H-781<br>HMO HEATER<br>HEATEC JOB NUMBER: HI 11-143 |
| THOMAS RUSSELL CO. PO. 250-76<br>PROJECT NAME:<br>TRCO JOB NUMBER: TRJ 250<br>TAG NUMBER: H-781<br>HMO HEATER<br>HEATEC JOB NUMBER: HI 11-041 | THOMAS RUSSELL CO. PO. 252-76<br>PROJECT NAME:<br>TRCO JOB NUMBER: TRJ 252<br>TAG NUMBER: H-781<br>HMO HEATER<br>HEATEC JOB NUMBER: HI 11-095 | THOMAS RUSSELL CO. PO. 260-76<br>PROJECT NAME:<br>TRCO JOB NUMBER: TRJ 260<br>TAG NUMBER: H-781<br>HMO HEATER<br>HEATEC JOB NUMBER: HI 11-129 | THOMAS RUSSELL CO. PO. 259-76<br>PROJECT NAME:<br>TRCO JOB NUMBER: TRJ 259<br>TAG NUMBER: H-781<br>HMO HEATER<br>HEATEC JOB NUMBER: HI 11-145 |

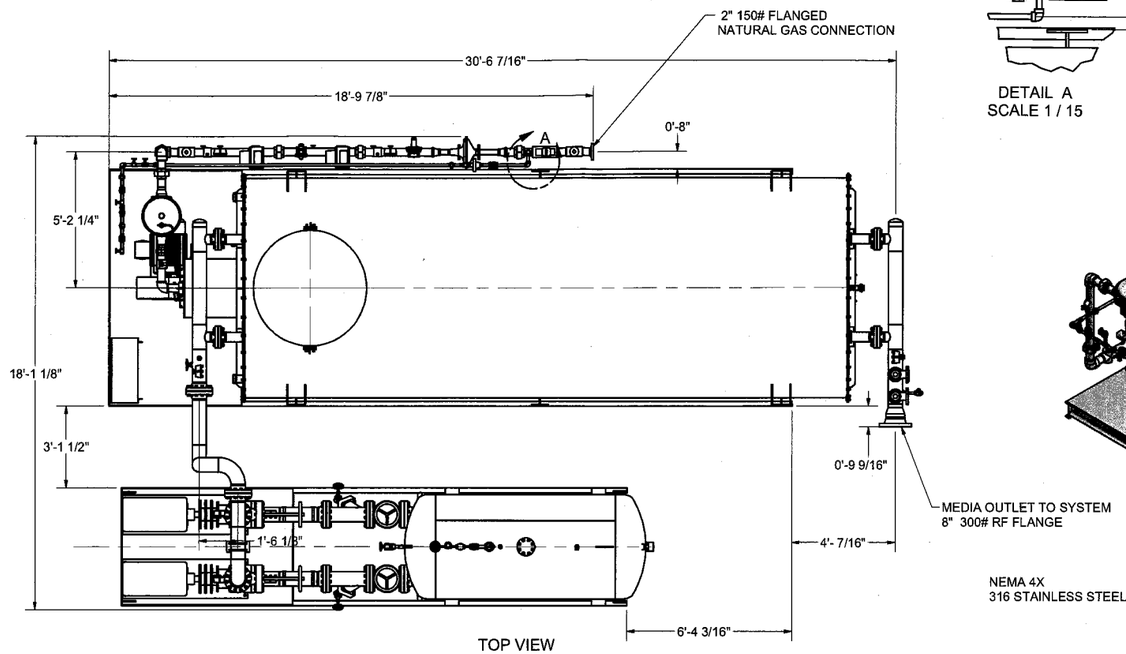


TOP VIEW
SCALE 1/35

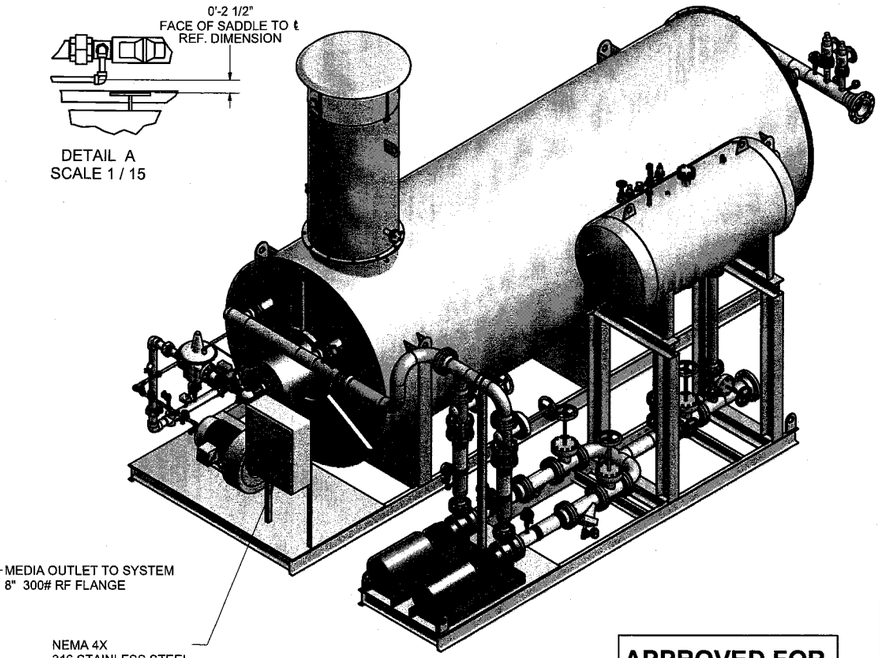


**APPROVED FOR CONSTRUCTION**

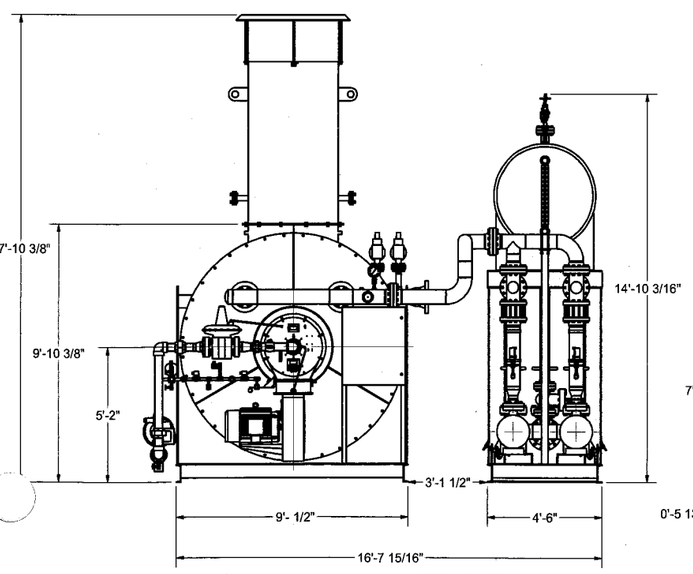


FRONT VIEW
SCALE 1/35

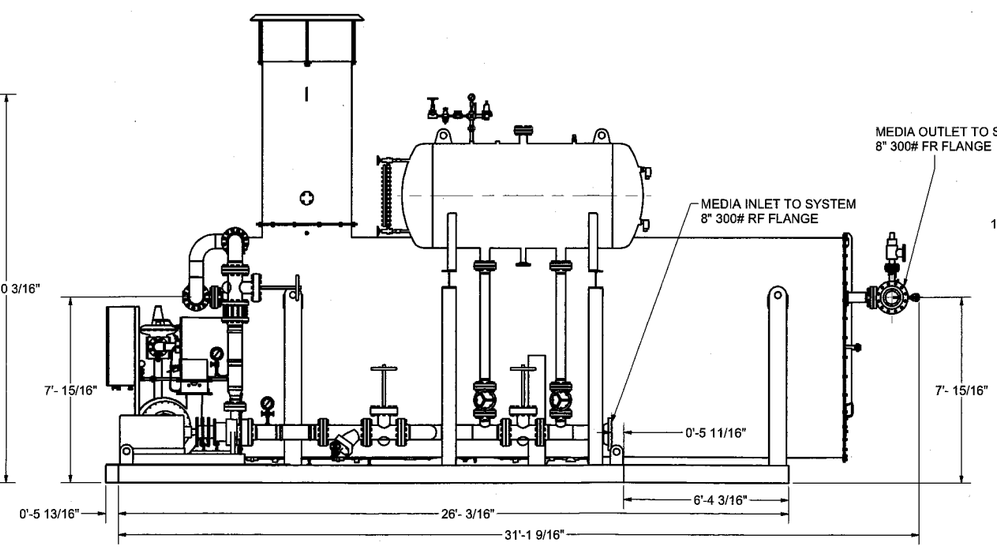


RIGHT SIDE VIEW
SCALE 1/35

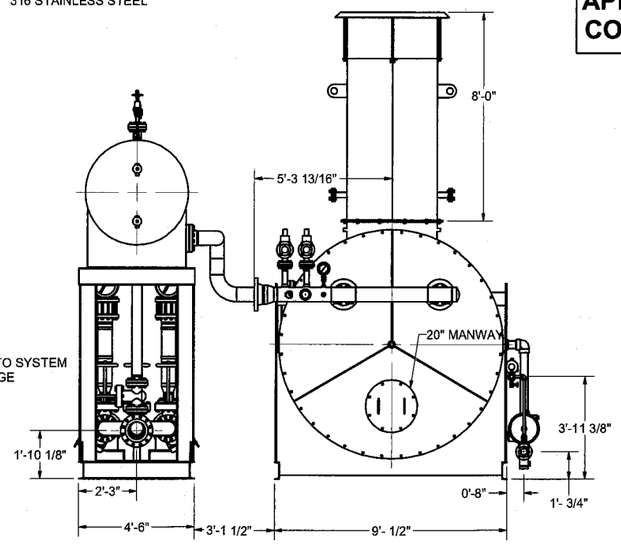


REAR VIEW
SCALE 1/35

| | | | |
|---|---|---|---|
| CUSTOMER: THOMAS RUSSEL | | JOB#: SEE TAGS | |
| DRAWING NAME: GENERAL ARRANGEMENT HCI 10010-40-D-G | | WO#: SEE TAGS<br>ISSUE DATE: | |
| HEATEC INC. an Aztec company | P.O. BOX 72760 CHATTANOOGA, TN 37407 | PHONE: (423) 821-5200 FAX: (423) 821-7673 | |
| DWG. DATE: 06/11/11 TMM | CHK DATE: | APPR. DATE: | |
| DWG./PART#: 11077-GA | | REV.: 0 | SCALE: NA / WEIGHT: NOTED |
| TOLERENCE IS +/- 1/4" UNLESS OTHERWISE NOTED. | THIS DRAWING AND THE DESIGN SHOWN THEREIN IS THE PROPERTY OF HEATEC INC. AND THE USE OR COPIES THEREOF CANNOT BE MADE WITHOUT WRITTEN CONSENT. | | |

C:\HEATEC-VAULT\Job Files\2011\077 THOMAS RUSSEL\11077-GA GENERAL ARRANGEMENT.idw

NOTES:

1. FUEL TYPE: NATURAL GAS
2. MAXIMUM BURNER INPUT: 26.5 MMBTU/hr
3. MINIMUM BURNER INPUT: 260,000 BTU/hr
4. AIR INLET PRESSURE: 22.0 " W.C.
5. MAIN GAS INLET MAX DESIGN PRESSURE: 5.0 PSI MAX.
6. VOLTAGE: 230V/460V/3Ph/60Hz

Per Heatec, Buit for Nox 75 ppm, CO 100 ppm

Parts List

| ITEM | QTY | PART NUMBER | DESCRIPTION |
|---|---|---|---|
| 10 | 1 | PRJ10056395 | Burner, Ratiomatic, RM3000, Natural Gas, Horizontal Firing, Inverted Left Hand B |

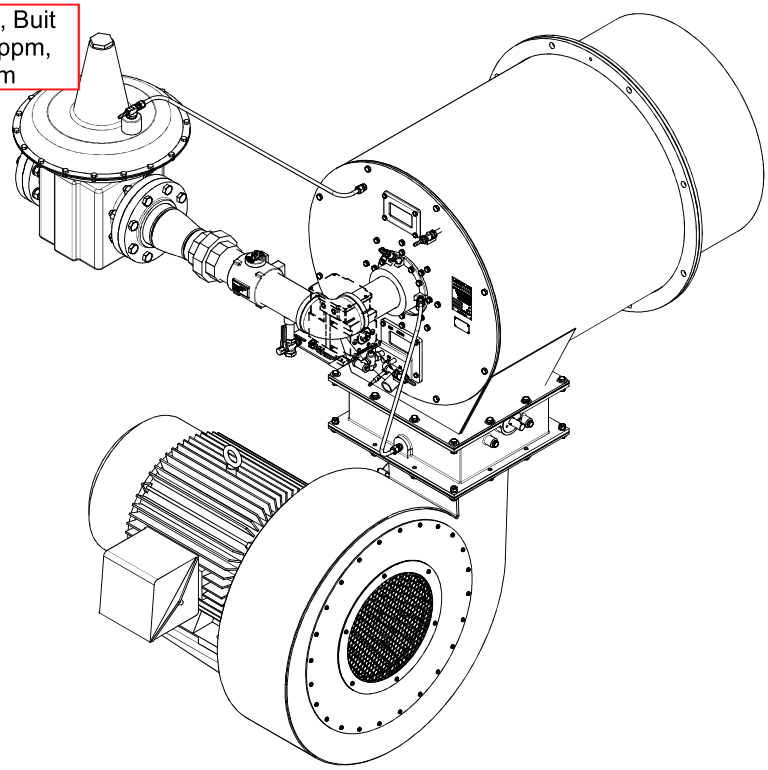

| SHIPPING INFORMATION | |
|---|---|
| WEIGHT: | 440 Kg [968 Lbs] |
| LENGTH: | 1570 mm [61.8 in] |
| WIDTH: | 1456 mm [57.3 in] |
| HEIGHT: | 1809 mm [71.2 in] |

REVISION HISTORY

| REV | DESCRIPTION | DATE | APPROVED |
|---|---|---|---|
| A | MOD106469 | 04/04/2011 | CS/HSK |

THE INFORMATION HEREON IS THE PROPERTY OF ECLIPSE, WITHOUT WRITTEN PERMISSION ANY COPYING, TRANSMITTAL TO OTHERS, AND ANY USE EXCEPT THAT FOR WHICH IT IS LOANED, IS PROHIBITED.

ECLIPSE®

Burner, Ratiomatic, RM3000, Customer Level, Natural Gas, Horizontal Firing, Inve

THIRD ANGLE PROJECTION

SIZE A1 | DWG NO PRJ10056396

SCALE: NONE | REF: PRJ10055865 | UNITS: mm[in] | SHEET 1 OF 2

GENERAC | INDUSTRIAL POWER

# STATEMENT OF EXHAUST EMISSIONS
# 2022 Perkins Bi-Fuel Fueled Generator

The measured emissions values provided here are proprietary to Generac and it's authorized dealers. This information may only be disseminated upon request to regulatory governmental bodies for emissions permitting purposes or to specifying organizations as submittal data when expressly required by project specifications, and shall remain confidential and not open to public viewing. This information is not intended for compilation or sales purposes and may not be used as such, nor may it be reproduced without the expressed written permission of Generac Power Systems, Inc.. The data provided shall not be meant to include information made public by Generac.

| | | | |
|---|---|---|---|
| Generator Model: | **SB/MB500** | EPA Certificate Number: | **NCPXL15.2NZS-002** |
| $kW_e$ Rating: | **500** | CARB Certificate Number: | **Not Applicable** |
| Engine Family: | **NCPXL15.2NZS** | SCAQMD CEP Number: | **Not Applicable** |
| Engine Model: | **2506C-E15TAG3** | Emission Standard Category: | **Tier 2** |
| Rated Engine Power (BHP)*: | **762** | Certification Type: | **Stationary Emergency CI (40 CFR Part 60 Subpart IIII)** |
| Fuel Type | **Diesel/Natural Gas** | | |
| Aspiration: | **Turbocharged/Aftercooled** | | |
| Rated RPM: | **1,800** | | |

*Engine power and fuel consumption are declared by the engine manufacturer of record and the U.S EPA.

**EMISSIONS BASED ON ENGINE POWER OF SPECIFIC ENGINE MODEL**

**These Values Are Actual Composite Weighted Exhaust Emissions Results Over the EPA 5-Mode Test Cycle**

| CO | NOx + NMHC | PM | |
|---|---|---|---|
| **0.27** | **4.30** | **0.18** | Grams/kW-hr |
| **0.20** | **3.21** | **0.13** | Grams/bhp-hr |

**These values are 100% load data exhaust emissions results.**

| CO | NOx + NMHC | PM | |
|---|---|---|---|
| **0.63** | **4.58** | **0.03** | Grams/kW-hr |
| **0.47** | **3.42** | **0.02** | Grams/bhp-hr |

- The stated values are actual exhaust emission test measurements obtained from an engine representative of the type described above.
- Values based on 5-Mode testing are official data of record as submitted to regulatory agencies for certification purposes. Testing was conducted in accordance with prevailing EPA protocol, which is typically accepted by SCAQMD and other regional authorities.
- No emissions values provided above are to be construed as guarantees of emission levels for any given Generac generator unit.
- Generac Power Systems, Inc. reserves the right to revise this information without prior notice.
- Consult state and local regulatory agencies for specific permitting requirements.
- The emission performance data supplied by the equipment manufacturer is only one element required toward completion of the permitting and installation process. State and local regulations may vary on a case-by-case basis and local agencies must be consulted by the permit application/equipment owner prior to equipment purchase or installation. The data supplied herein by Generac Power Systems Inc. cannot be construed as a guarantee of installability of the generating set.



 © 2022 Generac Power Systems, Inc. All rights reserved. All specifications are subject to change without notice.

# ELECTRONIC CODE OF FEDERAL REGULATIONS

**e-CFR data is current as of August 23, 2017**

Title 40 → Chapter I → Subchapter C → Part 98 → Subpart C → Appendix

Title 40: Protection of Environment
PART 98—MANDATORY GREENHOUSE GAS REPORTING
Subpart C—General Stationary Fuel Combustion Sources

---

## Table C-1 to Subpart C of Part 98—Default $CO_2$ Emission Factors and High Heat Values for Various Types of Fuel

Link to an amendment published at 81 FR 89252, Dec. 9, 2016.

### Default $CO_2$ Emission Factors and High Heat Values for Various Types of Fuel

| Fuel type | Default high heat value | Default $CO_2$ emission factor |
|---|---|---|
| Coal and coke | mmBtu/short ton | kg $CO_2$/mmBtu |
| Anthracite | 25.09 | 103.69 |
| Bituminous | 24.93 | 93.28 |
| Subbituminous | 17.25 | 97.17 |
| Lignite | 14.21 | 97.72 |
| Coal Coke | 24.80 | 113.67 |
| Mixed (Commercial sector) | 21.39 | 94.27 |
| Mixed (Industrial coking) | 26.28 | 93.90 |
| Mixed (Industrial sector) | 22.35 | 94.67 |
| Mixed (Electric Power sector) | 19.73 | 95.52 |
| Natural gas | mmBtu/scf | kg $CO_2$/mmBtu |
| (Weighted U.S. Average) | $1.026 \times 10^{-3}$ | 53.06 |
| Petroleum products | mmBtu/gallon | kg $CO_2$/mmBtu |
| Distillate Fuel Oil No. 1 | 0.139 | 73.25 |
| Distillate Fuel Oil No. 2 | 0.138 | 73.96 |
| Distillate Fuel Oil No. 4 | 0.146 | 75.04 |
| Residual Fuel Oil No. 5 | 0.140 | 72.93 |
| Residual Fuel Oil No. 6 | 0.150 | 75.10 |
| Used Oil | 0.138 | 74.00 |
| Kerosene | 0.135 | 75.20 |
| Liquefied petroleum gases (LPG)[1] | 0.092 | 61.71 |
| Propane[1] | 0.091 | 62.87 |
| Propylene[2] | 0.091 | 67.77 |
| Ethane[1] | 0.068 | 59.60 |
| Ethanol | 0.084 | 68.44 |
| Ethylene[2] | 0.058 | 65.96 |
| Isobutane[1] | 0.099 | 64.94 |
| Isobutylene[1] | 0.103 | 68.86 |
| Butane[1] | 0.103 | 64.77 |
| Butylene[1] | 0.105 | 68.72 |
| Naphtha (<401 deg F) | 0.125 | 68.02 |
| Natural Gasoline | 0.110 | 66.88 |
| Other Oil (>401 deg F) | 0.139 | 76.22 |
| Pentanes Plus | 0.110 | 70.02 |
| Petrochemical Feedstocks | 0.125 | 71.02 |
| Petroleum Coke | 0.143 | 102.41 |
| Special Naphtha | 0.125 | 72.34 |
| Unfinished Oils | 0.139 | 74.54 |
| Heavy Gas Oils | 0.148 | 74.92 |
| Lubricants | 0.144 | 74.27 |
| Motor Gasoline | 0.125 | 70.22 |
| Aviation Gasoline | 0.120 | 69.25 |
| Kerosene-Type Jet Fuel | 0.135 | 72.22 |
| Asphalt and Road Oil | 0.158 | 75.36 |
| Crude Oil | 0.138 | 74.54 |
| Other fuels—solid | mmBtu/short ton | kg $CO_2$/mmBtu |
| Municipal Solid Waste | 9.95[3] | 90.7 |
| Tires | 28.00 | 85.97 |
| Plastics | 38.00 | 75.00 |

| | | |
|---|---|---|
| Petroleum Coke | 30.00 | 102.41 |
| Other fuels—gaseous | mmBtu/scf | kg $CO_2$/mmBtu |
| Blast Furnace Gas | $0.092 \times 10^{-3}$ | 274.32 |
| Coke Oven Gas | $0.599 \times 10^{-3}$ | 46.85 |
| Propane Gas | $2.516 \times 10^{-3}$ | 61.46 |
| Fuel Gas[4] | $1.388 \times 10^{-3}$ | 59.00 |
| Biomass fuels—solid | mmBtu/short ton | kg $CO_2$/mmBtu |
| Wood and Wood Residuals (dry basis)[5] | 17.48 | 93.80 |
| Agricultural Byproducts | 8.25 | 118.17 |
| Peat | 8.00 | 111.84 |
| Solid Byproducts | 10.39 | 105.51 |
| Biomass fuels—gaseous | mmBtu/scf | kg $CO_2$/mmBtu |
| Landfill Gas | $0.485 \times 10^{-3}$ | 52.07 |
| Other Biomass Gases | $0.655 \times 10^{-3}$ | 52.07 |
| Biomass Fuels—Liquid | mmBtu/gallon | kg $CO_2$/mmBtu |
| Ethanol | 0.084 | 68.44 |
| Biodiesel (100%) | 0.128 | 73.84 |
| Rendered Animal Fat | 0.125 | 71.06 |
| Vegetable Oil | 0.120 | 81.55 |

[1]The HHV for components of LPG determined at 60 °F and saturation pressure with the exception of ethylene.

[2]Ethylene HHV determined at 41 °F (5 °C) and saturation pressure.

[3]Use of this default HHV is allowed only for: (a) Units that combust MSW, do not generate steam, and are allowed to use Tier 1; (b) units that derive no more than 10 percent of their annual heat input from MSW and/or tires; and (c) small batch incinerators that combust no more than 1,000 tons of MSW per year.

[4]Reporters subject to subpart X of this part that are complying with §98.243(d) or subpart Y of this part may only use the default HHV and the default $CO_2$ emission factor for fuel gas combustion under the conditions prescribed in §98.243(d)(2)(i) and (d)(2)(ii) and §98.252(a)(1) and (a)(2), respectively. Otherwise, reporters subject to subpart X or subpart Y shall use either Tier 3 (Equation C-5) or Tier 4.

[5]Use the following formula to calculate a wet basis HHV for use in Equation C-1: $HHV_w = ((100 - M)/100)*HHV_d$ where $HHV_w$ = wet basis HHV, M = moisture content (percent) and $HHV_d$ = dry basis HHV from Table C-1.

[78 FR 71950, Nov. 29, 2013]

---

Need assistance?

# ELECTRONIC CODE OF FEDERAL REGULATIONS

**e-CFR data is current as of August 23, 2017**

Title 40 → Chapter I → Subchapter C → Part 98 → Subpart C → Appendix

Title 40: Protection of Environment
PART 98—MANDATORY GREENHOUSE GAS REPORTING
Subpart C—General Stationary Fuel Combustion Sources

---

## Table C-2 to Subpart C of Part 98—Default $CH_4$ and $N_2O$ Emission Factors for Various Types of Fuel

Link to an amendment published at 81 FR 89252, Dec. 9, 2016.

| Fuel type | Default $CH_4$ emission factor (kg $CH_4$/mmBtu) | Default $N_2O$ emission factor (kg $N_2O$/mmBtu) |
|---|---|---|
| Coal and Coke (All fuel types in Table C-1) | $1.1 \times 10^{-02}$ | $1.6 \times 10^{-03}$ |
| Natural Gas | $1.0 \times 10^{-03}$ | $1.0 \times 10^{-04}$ |
| Petroleum (All fuel types in Table C-1) | $3.0 \times 10^{-03}$ | $6.0 \times 10^{-04}$ |
| Fuel Gas | $3.0 \times 10^{-03}$ | $6.0 \times 10^{-04}$ |
| Municipal Solid Waste | $3.2 \times 10^{-02}$ | $4.2 \times 10^{-03}$ |
| Tires | $3.2 \times 10^{-02}$ | $4.2 \times 10^{-03}$ |
| Blast Furnace Gas | $2.2 \times 10^{-05}$ | $1.0 \times 10^{-04}$ |
| Coke Oven Gas | $4.8 \times 10^{-04}$ | $1.0 \times 10^{-04}$ |
| Biomass Fuels—Solid (All fuel types in Table C-1, except wood and wood residuals) | $3.2 \times 10^{-02}$ | $4.2 \times 10^{-03}$ |
| Wood and wood residuals | $7.2 \times 10^{-03}$ | $3.6 \times 10^{-03}$ |
| Biomass Fuels—Gaseous (All fuel types in Table C-1) | $3.2 \times 10^{-03}$ | $6.3 \times 10^{-04}$ |
| Biomass Fuels—Liquid (All fuel types in Table C-1) | $1.1 \times 10^{-03}$ | $1.1 \times 10^{-04}$ |

Note: Those employing this table are assumed to fall under the IPCC definitions of the “Energy Industry” or “Manufacturing Industries and Construction”. In all fuels except for coal the values for these two categories are identical. For coal combustion, those who fall within the IPCC “Energy Industry” category may employ a value of 1g of $CH_4$/mmBtu.

[78 FR 71952, Nov. 29, 2013]

---

Need assistance?

TNRCC

October 2000
RG-109 (Draft)

Air Permit Technical Guidance for Chemical Sources:

# Flares and Vapor Oxidizers

printed on recycled paper

Air Permits Division

TEXAS NATURAL RESOURCE CONSERVATION COMMISSION

TNRCC

**Barry R. McBee,** *Chairman*
**R. B. "Ralph" Marquez,** *Commissioner*
**John M. Baker,** *Commissioner*

**Jeffrey A. Saitas, P.E.,** *Executive Director*

*Authorization for use or reproduction of any original material contained in this publication, i.e., not obtained from other sources, is freely granted. The Commission would appreciate acknowledgment.*

*Copies of this publication are available for public use through the Texas State Library, other state depository libraries, and the TNRCC Library, in compliance with the state depository law. For more information on TNRCC publications call (512)239-0028 or visit our Web site at:*

***htt:www.tnrcc.state.tx.us/publications***

Published and distributed by:
Texas Natural Resource Conservation Commission
P.O. Box 13087
Austin, Texas 78711-3087

The TNRCC is an equal opportunity/affirmative action employer. The agency does not allow discrimination on the basis of race, color, religion, national origin, sex, disability, age, sexual orientation or veteran status. In compliance with the Americans with Disabilities Act, this document may be requested in alternate formats by contacting the TNRCC at (512)239-0028, Fax 239-4488, or 1-800-RELAY-TX (TDD), or by writing P.O. Box 13087, Austin, TX 78711-3087.

## Technical Disclaimer

This document is intended as guidance to explain the specific requirements for new source review permitting of flares and vapor oxidizers; it does not supersede or replace any state or federal law, regulation, or rule. References to abatement equipment technologies are not intended to represent minimum or maximum levels of Best Available Control Technology (BACT). Determinations of BACT are made on a case-by-case basis as part of the New Source Review of permit applications. BACT determinations are always subject to adjustment in consideration of specific process requirements, air quality concerns, and recent developments in abatement technology. Additionally, specific health effects concerns may indicate stricter abatement than required by the BACT determination.

The represented calculation methods are intended as an aid in the completion of acceptable submittals; alternate calculation methods may be equally acceptable if they are based upon, and adequately demonstrate, sound engineering assumptions or data.

These guidelines are applicable as of this document's publication date but are subject to revision during the permit application preparation and review period. It is the responsibility of the applicants to remain abreast of any guideline or regulation developments that may affect their industries.

The electronic version of this document may not contain attachments or forms (such as the PI-1, Standard Exemptions, or tables) that can be obtained electronically elsewhere on the TNRCC Web site.

The special conditions included with these guidelines are for purposes of example only. Special conditions included in an actual permit are written by the reviewing engineer to address specific permit requirements and operating conditions.

# TABLE OF CONTENTS

Chapter 1—Overview . . . . . 1

Chapter 2—Types of Flare and Oxidizer Systems . . . . . 3
Flares . . . . . 3
Vapor Oxidizers . . . . . 4

Chapter 3—State and Federal Permitting Requirements . . . . . 5
Preconstruction Authorization . . . . . 5
General Regulation Applicability . . . . . 6

Chapter 4—Best Available Control Technology . . . . . 9
BACT for Flares . . . . . 9
BACT for Vapor Oxidizers . . . . . 13

Chapter 5—Emission Factors, Efficiencies, and Calculations . . . . . 18
Flares: Introduction . . . . . 18
Flare Emission Factors . . . . . 18
Flare Destruction Efficiencies . . . . . 18
Sample Calculations . . . . . 22
Vapor Oxidizers . . . . . 29

Chapter 6—Example Permit Conditions . . . . . 29
General . . . . . 30
Flares . . . . . 30
Enclosed Flares or Vapor Oxidizers . . . . . 31
Vapor Oxidizers . . . . . 33

References . . . . . 35
Glossary . . . . . 37

Attachment A—General Control Device Requirements, 40 CFR § 60.18 . . 39
Attachment B—Typical Refinery Flare Data . . . . . 42
Attachment C—Typical Acid Gas Flare Data . . . . . 44
Attachment D—NSR Table 4, Combustion Units . . . . . 46

## Tables

Table 1. Applicable TNRCC Regulations . . . . . 6
Table 2. Flare Pilot Requirements . . . . . 12
Table 3. BACT, Sampling, and Monitoring Guidelines for Vapor Oxidizers 16
Table 4. Flare Factors . . . . . 19
Table 5. 99.5 Percent DRE Flare Factors . . . . . 21
Table 6. Waste Stream Constituents in Mole Percent . . . . . 23
Table 7. Estimation of Average Mass Flow Rates . . . . . 23
Table 8. Emission Rates . . . . . 23
Table 9. Estimation of Net Heat Releases . . . . . 24
Table 10. Estimation of Volume Average Molecular Weight . . . . . 28

## Chapter 2—Types of Flare and Oxidizer Systems

This document provides guidance for two classes of vapor combustion control devices: flares and vapor oxidizers. While there may be some overlap between the two, flares have generally been treated separately by the EPA and the TNRCC, in large part because flares have an open flame and often cannot be sampled, so emissions are estimated based on the results of flare testing performed in the early 1980s. Each of the two classes will be dealt with separately in each of the chapters of this document.

***Combustion Control Devices NOT Discussed.*** This document will not cover permitting of RCRA or BIF units because the requirements for these units often go beyond the requirements for state air permitting. Incinerators used to treat solid wastes are covered in another technical guidance document, *Incinerators*. Guidance for combustion control devices associated with spray paint booths, coatings operations, and semiconductor facilities should be obtained by calling the TNRCC New Source Review Permits Division at (512) 239-1250.

# Flares

Flare systems generally are open-flame control devices used for disposing of waste gas streams during both routine process and emergency or upset conditions. In addition to simple, unassisted flares, typical smokeless flare systems include, but are not limited to, the following:

- ***Enclosed Flares/Vapor Combustors.*** Enclosed flares are used in disposing of waste gas streams in instances where a visible flame is unacceptable. Applications include chemical processing, petroleum refining and production, and municipal waste gas treatment. These may be referred to as vapor combustors and can have more than one burner in the stack.

- ***Steam-Assisted Flares***. Steam-assisted flares are used in disposing of low-pressure waste gas streams when steam is available and practical to minimize smoking from the flare. Applications are similar to those of enclosed flares. Flares might also be assisted with natural gas if readily available on site; these flares would undergo a case-by-case review.

- ***Air-Assisted Flares.*** Air-assisted flares are used in disposing of low-pressure waste gas streams when practical or when steam utilities are not available to minimize smoking from the flare. Applications include chemical processing, petroleum refining and production, and pipeline transportation.

- ***Sonic Flares.*** Sonic flares are used in disposing of high-pressure waste gas streams. Applications include gas production, pipeline transportation, and treatment plants.

- ***Multipoint Flare Systems.*** Multipoint flare systems are used in disposing of both high- and low-pressure waste gas streams. Multiple burner tips in conjunction with a staged control system provide for controlled combustion. Applications are similar to those of air-assisted flares.

## Vapor Oxidizers

These devices generally do not have an open flame but have an exhaust stack which allows for sampling and monitoring of exhaust emissions. The most common type, thermal, relies on the combustion heat of the waste gas and assist fuel (if required) to oxidize the waste gas air contaminants. Other types include:

- ***Recuperative.*** In this case, the waste gas is directed to a heat exchanger to be preheated by the exhaust gas, to minimize the need for additional assist fuel. Recuperative oxidizers are considered a subset of thermal oxidizers in this document.

- ***Regenerative***. Combustion takes place in a chamber with a heat sink, such as ceramic saddles, which retains the heat of combustion, allowing for combustion of more dilute vapor streams (which have a low heat of combustion) at a lower cost. These units generally have multiple chambers, which allow for the preheat of one chamber by exhaust gases while combustion takes place in another chamber.

- ***Catalytic.*** Combustion takes place over a catalyst that allows for combustion at a lower temperature (in the range of 600 to 800°F as opposed to greater than 1400°F for many thermal oxidizers). Catalytic oxidizers function best with a waste stream with constant flow and composition.

**Chapter 5—Emission Factors, Efficiencies, and Calculations**

This chapter provides detailed instructions for the calculations necessary to verify BACT and estimate emissions from flares and vapor oxidizers. Flares must be checked to determine whether they will satisfy the flow and thermal requirements of 40 CFR § 60.18, and their emissions are determined by the use of emission factors. Example calculations are provided for these flare calculations.

Oxidizer emissions are determined by using previous sampling results or emission factors from the manufacturer or AP-42. These calculations are very similar to the flare calculations and are only discussed in general terms.

## Flares: Introduction

Although emissions from emergency flares are not included in a permit when it is issued, emissions should be estimated for both routine process flares and emergency flares. Sometimes, emissions of routine pilot gas combustion may be included in an issued permit for emergency flares (although not required).

In this section, the *flare* emission factors and destruction efficiencies are presented first. This information is followed by sample *calculations* that demonstrate how to ensure that the requirements of 40 CFR § 60.18 are satisfied and how to estimate emissions from a flare. Flare data in Attachment B (typical refinery flare) will be used as a basis in most of the following calculations. Flare data in Attachment C (acid gas flare) will be used as a basis in the example calculations for $SO_2$ emissions.

## Flare Emission Factors

The usual flare destruction efficiencies and emission factors are provided in Table 4. The high-Btu waste streams referred to in the table have a heating value greater than 1,000 Btu/scf.

## Flare Destruction Efficiencies

Claims for destruction efficiencies greater than those listed in Table 4 will be considered on a case-by-case basis. The applicant may make one of the three following demonstrations to justify the higher destruction efficiency: (1) general method, (2) 99.5 percent justification, or (3) flare stack sampling.

**Table 4. Flare Factors**

| Waste Stream | Destruction/Removal Efficiency (DRE) | | |
|---|---|---|---|
| VOC | 98 percent (generic)<br><br>99 percent for compounds containing no more than 3 carbons that contain no elements other than carbon and hydrogen in addition to the following compounds: methanol, ethanol, propanol, ethylene oxide and propylene oxide | | |
| $H_2S$ | 98 percent | | |
| $NH_3$ | case by case | | |
| CO | case by case | | |
| **Air Contaminants** | **Emission Factors** | | |
| thermal $NO_x$ | steam-assist: | high Btu | 0.0485 lb/MMBtu |
| | | low Btu | 0.068 lb/MMBtu |
| | other: | high Btu | 0.138 lb/MMBtu |
| | | low Btu | 0.0641 lb/MMBtu |
| fuel $NO_x$ | $NO_x$ is 0.5 wt percent of inlet $NH_3$, other fuels case by case | | |
| CO | steam-assist: | high Btu | 0.3503 lb/MMBtu |
| | | low Btu | 0.3465 lb/MMBtu |
| | other: | high Btu | 0.2755 lb/MMBtu |
| | | low Btu | 0.5496 lb/MMBtu |
| PM | none, required to be smokeless | | |
| $SO_2$ | 100 percent S in fuel to $SO_2$ | | |

*The only exeption ot this is if inorganics might be emitted from the flare. In the case of landfills, the AP-42 PM factor may be used. In other cases, the emissions should be based on the composition of the waste stream routed to the flare.

## 1.4 Natural Gas Combustion

### 1.4.1 General[1-2]

Natural gas is one of the major combustion fuels used throughout the country. It is mainly used to generate industrial and utility electric power, produce industrial process steam and heat, and heat residential and commercial space. Natural gas consists of a high percentage of methane (generally above 85 percent) and varying amounts of ethane, propane, butane, and inerts (typically nitrogen, carbon dioxide, and helium). The average gross heating value of natural gas is approximately 1,020 British thermal units per standard cubic foot (Btu/scf), usually varying from 950 to 1,050 Btu/scf.

### 1.4.2 Firing Practices[3-5]

There are three major types of boilers used for natural gas combustion in commercial, industrial, and utility applications: watertube, firetube, and cast iron. Watertube boilers are designed to pass water through the inside of heat transfer tubes while the outside of the tubes is heated by direct contact with the hot combustion gases and through radiant heat transfer. The watertube design is the most common in utility and large industrial boilers. Watertube boilers are used for a variety of applications, ranging from providing large amounts of process steam, to providing hot water or steam for space heating, to generating high-temperature, high-pressure steam for producing electricity. Furthermore, watertube boilers can be distinguished either as field erected units or packaged units.

Field erected boilers are boilers that are constructed on site and comprise the larger sized watertube boilers. Generally, boilers with heat input levels greater than 100 MMBtu/hr, are field erected. Field erected units usually have multiple burners and, given the customized nature of their construction, also have greater operational flexibility and $NO_x$ control options. Field erected units can also be further categorized as wall-fired or tangential-fired. Wall-fired units are characterized by multiple individual burners located on a single wall or on opposing walls of the furnace while tangential units have several rows of air and fuel nozzles located in each of the four corners of the boiler.

Package units are constructed off-site and shipped to the location where they are needed. While the heat input levels of packaged units may range up to 250 MMBtu/hr, the physical size of these units are constrained by shipping considerations and generally have heat input levels less than 100 MMBtu/hr. Packaged units are always wall-fired units with one or more individual burners. Given the size limitations imposed on packaged boilers, they have limited operational flexibility and cannot feasibly incorporate some $NO_x$ control options.

Firetube boilers are designed such that the hot combustion gases flow through tubes, which heat the water circulating outside of the tubes. These boilers are used primarily for space heating systems, industrial process steam, and portable power boilers. Firetube boilers are almost exclusively packaged units. The two major types of firetube units are Scotch Marine boilers and the older firebox boilers. In cast iron boilers, as in firetube boilers, the hot gases are contained inside the tubes and the water being heated circulates outside the tubes. However, the units are constructed of cast iron rather than steel. Virtually all cast iron boilers are constructed as package boilers. These boilers are used to produce either low-pressure steam or hot water, and are most commonly used in small commercial applications.

Natural gas is also combusted in residential boilers and furnaces. Residential boilers and furnaces generally resemble firetube boilers with flue gas traveling through several channels or tubes with water or air circulated outside the channels or tubes.

### 1.4.3 Emissions[3-4]

The emissions from natural gas-fired boilers and furnaces include nitrogen oxides ($NO_x$), carbon monoxide (CO), and carbon dioxide ($CO_2$), methane ($CH_4$), nitrous oxide ($N_2O$), volatile organic compounds (VOCs), trace amounts of sulfur dioxide ($SO_2$), and particulate matter (PM).

Nitrogen Oxides -

Nitrogen oxides formation occurs by three fundamentally different mechanisms. The principal mechanism of $NO_x$ formation in natural gas combustion is thermal $NO_x$. The thermal $NO_x$ mechanism occurs through the thermal dissociation and subsequent reaction of nitrogen ($N_2$) and oxygen ($O_2$) molecules in the combustion air. Most $NO_x$ formed through the thermal $NO_x$ mechanism occurs in the high temperature flame zone near the burners. The formation of thermal $NO_x$ is affected by three furnace-zone factors: (1) oxygen concentration, (2) peak temperature, and (3) time of exposure at peak temperature. As these three factors increase, $NO_x$ emission levels increase. The emission trends due to changes in these factors are fairly consistent for all types of natural gas-fired boilers and furnaces. Emission levels vary considerably with the type and size of combustor and with operating conditions (e.g., combustion air temperature, volumetric heat release rate, load, and excess oxygen level).

The second mechanism of $NO_x$ formation, called prompt $NO_x$, occurs through early reactions of nitrogen molecules in the combustion air and hydrocarbon radicals from the fuel. Prompt $NO_x$ reactions occur within the flame and are usually negligible when compared to the amount of $NO_x$ formed through the thermal $NO_x$ mechanism. However, prompt $NO_x$ levels may become significant with ultra-low-$NO_x$ burners.

The third mechanism of $NO_x$ formation, called fuel $NO_x$, stems from the evolution and reaction of fuel-bound nitrogen compounds with oxygen. Due to the characteristically low fuel nitrogen content of natural gas, $NO_x$ formation through the fuel $NO_x$ mechanism is insignificant.

Carbon Monoxide -

The rate of CO emissions from boilers depends on the efficiency of natural gas combustion. Improperly tuned boilers and boilers operating at off-design levels decrease combustion efficiency resulting in increased CO emissions. In some cases, the addition of $NO_x$ control systems such as low $NO_x$ burners and flue gas recirculation (FGR) may also reduce combustion efficiency, resulting in higher CO emissions relative to uncontrolled boilers.

Volatile Organic Compounds -

The rate of VOC emissions from boilers and furnaces also depends on combustion efficiency. VOC emissions are minimized by combustion practices that promote high combustion temperatures, long residence times at those temperatures, and turbulent mixing of fuel and combustion air. Trace amounts of VOC species in the natural gas fuel (e.g., formaldehyde and benzene) may also contribute to VOC emissions if they are not completely combusted in the boiler.

Sulfur Oxides -

Emissions of $SO_2$ from natural gas-fired boilers are low because pipeline quality natural gas typically has sulfur levels of 2,000 grains per million cubic feet. However, sulfur-containing odorants are added to natural gas for detecting leaks, leading to small amounts of $SO_2$ emissions. Boilers combusting unprocessed natural gas may have higher $SO_2$ emissions due to higher levels of sulfur in the natural gas. For these units, a sulfur mass balance should be used to determine $SO_2$ emissions.

Particulate Matter -

Because natural gas is a gaseous fuel, filterable PM emissions are typically low. Particulate matter from natural gas combustion has been estimated to be less than 1 micrometer in size and has filterable and condensable fractions. Particulate matter in natural gas combustion are usually larger molecular weight hydrocarbons that are not fully combusted. Increased PM emissions may result from poor air/fuel mixing or maintenance problems.

Greenhouse Gases -[6-9]

$CO_2$, $CH_4$, and $N_2O$ emissions are all produced during natural gas combustion. In properly tuned boilers, nearly all of the fuel carbon (99.9 percent) in natural gas is converted to $CO_2$ during the combustion process. This conversion is relatively independent of boiler or combustor type. Fuel carbon not converted to $CO_2$ results in $CH_4$, CO, and/or VOC emissions and is due to incomplete combustion. Even in boilers operating with poor combustion efficiency, the amount of $CH_4$, CO, and VOC produced is insignificant compared to $CO_2$ levels.

Formation of $N_2O$ during the combustion process is affected by two furnace-zone factors. $N_2O$ emissions are minimized when combustion temperatures are kept high (above 1475°F) and excess oxygen is kept to a minimum (less than 1 percent).

Methane emissions are highest during low-temperature combustion or incomplete combustion, such as the start-up or shut-down cycle for boilers. Typically, conditions that favor formation of $N_2O$ also favor emissions of methane.

1.4.4 Controls[4,10]

$NO_x$ Controls -

Currently, the two most prevalent combustion control techniques used to reduce $NO_x$ emissions from natural gas-fired boilers are flue gas recirculation (FGR) and low $NO_x$ burners. In an FGR system, a portion of the flue gas is recycled from the stack to the burner windbox. Upon entering the windbox, the recirculated gas is mixed with combustion air prior to being fed to the burner. The recycled flue gas consists of combustion products which act as inerts during combustion of the fuel/air mixture. The FGR system reduces $NO_x$ emissions by two mechanisms. Primarily, the recirculated gas acts as a dilutent to reduce combustion temperatures, thus suppressing the thermal $NO_x$ mechanism. To a lesser extent, FGR also reduces $NO_x$ formation by lowering the oxygen concentration in the primary flame zone. The amount of recirculated flue gas is a key operating parameter influencing $NO_x$ emission rates for these systems. An FGR system is normally used in combination with specially designed low $NO_x$ burners capable of sustaining a stable flame with the increased inert gas flow resulting from the use of FGR. When low $NO_x$ burners and FGR are used in combination, these techniques are capable of reducing $NO_x$ emissions by 60 to 90 percent.

Low $NO_x$ burners reduce $NO_x$ by accomplishing the combustion process in stages. Staging partially delays the combustion process, resulting in a cooler flame which suppresses thermal $NO_x$ formation. The two most common types of low $NO_x$ burners being applied to natural gas-fired boilers are staged air burners and staged fuel burners. $NO_x$ emission reductions of 40 to 85 percent (relative to uncontrolled emission levels) have been observed with low $NO_x$ burners.

Other combustion control techniques used to reduce $NO_x$ emissions include staged combustion and gas reburning. In staged combustion (e.g., burners-out-of-service and overfire air), the degree of staging is a key operating parameter influencing $NO_x$ emission rates. Gas reburning is similar to the use of overfire in the use of combustion staging. However, gas reburning injects additional amounts of natural gas in the upper furnace, just before the overfire air ports, to provide increased reduction of $NO_x$ to $NO_2$.

Two postcombustion technologies that may be applied to natural gas-fired boilers to reduce $NO_x$ emissions are selective noncatalytic reduction (SNCR) and selective catalytic reduction (SCR). The SNCR system injects ammonia ($NH_3$) or urea into combustion flue gases (in a specific temperature zone) to reduce $NO_x$ emission. The Alternative Control Techniques (ACT) document for $NO_x$ emissions from utility boilers, maximum SNCR performance was estimated to range from 25 to 40 percent for natural gas-fired boilers.[12] Performance data available from several natural gas fired utility boilers with SNCR show a 24 percent reduction in $NO_x$ for applications on wall-fired boilers and a 13 percent reduction in $NO_x$ for applications on tangential-fired boilers.[11] In many situations, a boiler may have an SNCR system installed to trim $NO_x$ emissions to meet permitted levels. In these cases, the SNCR system may not be operated to achieve maximum $NO_x$ reduction. The SCR system involves injecting $NH_3$ into the flue gas in the presence of a catalyst to reduce $NO_x$ emissions. No data were available on SCR performance on natural gas fired boilers at the time of this publication. However, the ACT Document for utility boilers estimates $NO_x$ reduction efficiencies for SCR control ranging from 80 to 90 percent.[12]

Emission factors for natural gas combustion in boilers and furnaces are presented in Tables 1.4-1, 1.4-2, 1.4-3, and 1.4-4.[11] Tables in this section present emission factors on a volume basis (lb/$10^6$ scf). To convert to an energy basis (lb/MMBtu), divide by a heating value of 1,020 MMBtu/$10^6$ scf. For the purposes of developing emission factors, natural gas combustors have been organized into three general categories: large wall-fired boilers with greater than 100 MMBtu/hr of heat input, boilers and residential furnaces with less than 100 MMBtu/hr of heat input, and tangential-fired boilers. Boilers within these categories share the same general design and operating characteristics and hence have similar emission characteristics when combusting natural gas.

Emission factors are rated from A to E to provide the user with an indication of how "good" the factor is, with "A" being excellent and "E" being poor. The criteria that are used to determine a rating for an emission factor can be found in the Emission Factor Documentation for AP-42 Section 1.4 and in the introduction to the AP-42 document.

### 1.4.5 Updates Since the Fifth Edition

The Fifth Edition was released in January 1995. Revisions to this section are summarized below. For further detail, consult the Emission Factor Documentation for this section. These and other documents can be found on the Emission Factor and Inventory Group (EFIG) home page (http://www.epa.gov/ttn/chief).

Supplement D, March 1998

- Text was revised concerning Firing Practices, Emissions, and Controls.
- All emission factors were updated based on 482 data points taken from 151 source tests. Many new emission factors have been added for speciated organic compounds, including hazardous air pollutants.

July 1998 - minor changes

- Footnote D was added to table 1.4-3 to explain why the sum of individual HAP may exceed VOC or TOC, the web address was updated, and the references were reordered.

Table 1.4-1. EMISSION FACTORS FOR NITROGEN OXIDES ($NO_x$) AND CARBON MONOXIDE (CO) FROM NATURAL GAS COMBUSTION[a]

| Combustor Type (MMBtu/hr Heat Input) [SCC] | $NO_x$[b] | | CO | |
|---|---|---|---|---|
| | Emission Factor ($lb/10^6$ scf) | Emission Factor Rating | Emission Factor ($lb/10^6$ scf) | Emission Factor Rating |
| Large Wall-Fired Boilers (>100) [1-01-006-01, 1-02-006-01, 1-03-006-01] | | | | |
| Uncontrolled (Pre-NSPS)[c] | 280 | A | 84 | B |
| Uncontrolled (Post-NSPS)[c] | 190 | A | 84 | B |
| Controlled - Low $NO_x$ burners | 140 | A | 84 | B |
| Controlled - Flue gas recirculation | 100 | D | 84 | B |
| Small Boilers (<100) [1-01-006-02, 1-02-006-02, 1-03-006-02, 1-03-006-03] | | | | |
| Uncontrolled | 100 | B | 84 | B |
| Controlled - Low $NO_x$ burners | 50 | D | 84 | B |
| Controlled - Low $NO_x$ burners/Flue gas recirculation | 32 | C | 84 | B |
| Tangential-Fired Boilers (All Sizes) [1-01-006-04] | | | | |
| Uncontrolled | 170 | A | 24 | C |
| Controlled - Flue gas recirculation | 76 | D | 98 | D |
| Residential Furnaces (<0.3) [No SCC] | | | | |
| Uncontrolled | 94 | B | 40 | B |

[a] Reference 11. Units are in pounds of pollutant per million standard cubic feet of natural gas fired. To convert from $lb/10^6$ scf to $kg/10^6$ $m^3$, multiply by 16. Emission factors are based on an average natural gas higher heating value of 1,020 Btu/scf. To convert from $lb/10^6$ scf to lb/MMBtu, divide by 1,020. The emission factors in this table may be converted to other natural gas heating values by multiplying the given emission factor by the ratio of the specified heating value to this average heating value. SCC = Source Classification Code. ND = no data. NA = not applicable.

[b] Expressed as $NO_2$. For large and small wall fired boilers with SNCR control, apply a 24 percent reduction to the appropriate $NO_X$ emission factor. For tangential-fired boilers with SNCR control, apply a 13 percent reduction to the appropriate $NO_X$ emission factor.

[c] NSPS=New Source Performance Standard as defined in 40 CFR 60 Subparts D and Db. Post-NSPS units are boilers with greater than 250 MMBtu/hr of heat input that commenced construction modification, or reconstruction after August 17, 1971, and units with heat input capacities between 100 and 250 MMBtu/hr that commenced construction modification, or reconstruction after June 19, 1984.

TABLE 1.4-2. EMISSION FACTORS FOR CRITERIA POLLUTANTS AND GREENHOUSE GASES FROM NATURAL GAS COMBUSTION[a]

| Pollutant | Emission Factor ($lb/10^6$ scf) | Emission Factor Rating |
|---|---|---|
| $CO_2$[b] | 120,000 | A |
| Lead | 0.0005 | D |
| $N_2O$ (Uncontrolled) | 2.2 | E |
| $N_2O$ (Controlled-low-$NO_X$ burner) | 0.64 | E |
| PM (Total)[c] | 7.6 | D |
| PM (Condensable)[c] | 5.7 | D |
| PM (Filterable)[c] | 1.9 | B |
| $SO_2$[d] | 0.6 | A |
| TOC | 11 | B |
| Methane | 2.3 | B |
| VOC | 5.5 | C |

[a] Reference 11. Units are in pounds of pollutant per million standard cubic feet of natural gas fired. Data are for all natural gas combustion sources. To convert from $lb/10^6$ scf to $kg/10^6$ $m^3$, multiply by 16. To convert from $lb/10^6$ scf to 1b/MMBtu, divide by 1,020. The emission factors in this table may be converted to other natural gas heating values by multiplying the given emission factor by the ratio of the specified heating value to this average heating value. TOC = Total Organic Compounds. VOC = Volatile Organic Compounds.

[b] Based on approximately 100% conversion of fuel carbon to $CO_2$. $CO_2[lb/10^6 \text{ scf}] = (3.67)(CON)(C)(D)$, where CON = fractional conversion of fuel carbon to $CO_2$, C = carbon content of fuel by weight (0.76), and D = density of fuel, $4.2 \times 10^4$ $lb/10^6$ scf.

[c] All PM (total, condensible, and filterable) is assumed to be less than 1.0 micrometer in diameter. Therefore, the PM emission factors presented here may be used to estimate $PM_{10}$, $PM_{2.5}$ or $PM_1$ emissions. Total PM is the sum of the filterable PM and condensible PM. Condensible PM is the particulate matter collected using EPA Method 202 (or equivalent). Filterable PM is the particulate matter collected on, or prior to, the filter of an EPA Method 5 (or equivalent) sampling train.

[d] Based on 100% conversion of fuel sulfur to $SO_2$.
Assumes sulfur content is natural gas of 2,000 grains/$10^6$ scf. The $SO_2$ emission factor in this table can be converted to other natural gas sulfur contents by multiplying the $SO_2$ emission factor by the ratio of the site-specific sulfur content (grains/$10^6$ scf) to 2,000 grains/$10^6$ scf.

TABLE 1.4-3. EMISSION FACTORS FOR SPECIATED ORGANIC COMPOUNDS FROM NATURAL GAS COMBUSTION[a]

| CAS No. | Pollutant | Emission Factor ($lb/10^6$ scf) | Emission Factor Rating |
|---|---|---|---|
| 91-57-6 | 2-Methylnaphthalene[b, c] | 2.4E-05 | D |
| 56-49-5 | 3-Methylcholanthrene[b, c] | <1.8E-06 | E |
| | 7,12-Dimethylbenz(a)anthracene[b,c] | <1.6E-05 | E |
| 83-32-9 | Acenaphthene[b,c] | <1.8E-06 | E |
| 203-96-8 | Acenaphthylene[b,c] | <1.8E-06 | E |
| 120-12-7 | Anthracene[b,c] | <2.4E-06 | E |
| 56-55-3 | Benz(a)anthracene[b,c] | <1.8E-06 | E |
| 71-43-2 | Benzene[b] | 2.1E-03 | B |
| 50-32-8 | Benzo(a)pyrene[b,c] | <1.2E-06 | E |
| 205-99-2 | Benzo(b)fluoranthene[b,c] | <1.8E-06 | E |
| 191-24-2 | Benzo(g,h,i)perylene[b,c] | <1.2E-06 | E |
| 207-08-9 | Benzo(k)fluoranthene[b,c] | <1.8E-06 | E |
| 106-97-8 | Butane | 2.1E+00 | E |
| 218-01-9 | Chrysene[b,c] | <1.8E-06 | E |
| 53-70-3 | Dibenzo(a,h)anthracene[b,c] | <1.2E-06 | E |
| 25321-22-6 | Dichlorobenzene[b] | 1.2E-03 | E |
| 74-84-0 | Ethane | 3.1E+00 | E |
| 206-44-0 | Fluoranthene[b,c] | 3.0E-06 | E |
| 86-73-7 | Fluorene[b,c] | 2.8E-06 | E |
| 50-00-0 | Formaldehyde[b] | 7.5E-02 | B |
| 110-54-3 | Hexane[b] | 1.8E+00 | E |
| 193-39-5 | Indeno(1,2,3-cd)pyrene[b,c] | <1.8E-06 | E |
| 91-20-3 | Naphthalene[b] | 6.1E-04 | E |
| 109-66-0 | Pentane | 2.6E+00 | E |
| 85-01-8 | Phenanathrene[b,c] | 1.7E-05 | D |
| 74-98-6 | Propane | 1.6E+00 | E |

TABLE 1.4-3. EMISSION FACTORS FOR SPECIATED ORGANIC COMPOUNDS FROM NATURAL GAS COMBUSTION (Continued)

| CAS No. | Pollutant | Emission Factor ($lb/10^6$ scf) | Emission Factor Rating |
|---|---|---|---|
| 129-00-0 | Pyrene[b, c] | 5.0E-06 | E |
| 108-88-3 | Toluene[b] | 3.4E-03 | C |

[a] Reference 11. Units are in pounds of pollutant per million standard cubic feet of natural gas fired. Data are for all natural gas combustion sources. To convert from $lb/10^6$ scf to $kg/10^6$ $m^3$, multiply by 16. To convert from $1b/10^6$ scf to lb/MMBtu, divide by 1,020. Emission Factors preceeded with a less-than symbol are based on method detection limits.

[b] Hazardous Air Pollutant (HAP) as defined by Section 112(b) of the Clean Air Act.

[c] HAP because it is Polycyclic Organic Matter (POM). POM is a HAP as defined by Section 112(b) of the Clean Air Act.

[d] The sum of individual organic compounds may exceed the VOC and TOC emission factors due to differences in test methods and the availability of test data for each pollutant.

TABLE 1.4-4. EMISSION FACTORS FOR METALS FROM NATURAL GAS COMBUSTION[a]

| CAS No. | Pollutant | Emission Factor ($lb/10^6$ scf) | Emission Factor Rating |
|---|---|---|---|
| 7440-38-2 | Arsenic[b] | 2.0E-04 | E |
| 7440-39-3 | Barium | 4.4E-03 | D |
| 7440-41-7 | Beryllium[b] | <1.2E-05 | E |
| 7440-43-9 | Cadmium[b] | 1.1E-03 | D |
| 7440-47-3 | Chromium[b] | 1.4E-03 | D |
| 7440-48-4 | Cobalt[b] | 8.4E-05 | D |
| 7440-50-8 | Copper | 8.5E-04 | C |
| 7439-96-5 | Manganese[b] | 3.8E-04 | D |
| 7439-97-6 | Mercury[b] | 2.6E-04 | D |
| 7439-98-7 | Molybdenum | 1.1E-03 | D |
| 7440-02-0 | Nickel[b] | 2.1E-03 | C |
| 7782-49-2 | Selenium[b] | <2.4E-05 | E |
| 7440-62-2 | Vanadium | 2.3E-03 | D |
| 7440-66-6 | Zinc | 2.9E-02 | E |

[a] Reference 11. Units are in pounds of pollutant per million standard cubic feet of natural gas fired. Data are for all natural gas combustion sources. Emission factors preceeded by a less-than symbol are based on method detection limits. To convert from $lb/10^6$ scf to $kg/10^6$ $m^3$, multiply by l6. To convert from $lb/10^6$ scf to 1b/MMBtu, divide by 1,020.

[b] Hazardous Air Pollutant as defined by Section 112(b) of the Clean Air Act.

References For Section 1.4


1. *Exhaust Gases From Combustion And Industrial Processes*, EPA Contract No. EHSD 71-36, Engineering Science, Inc., Washington, DC, October 1971.

2. *Chemical Engineers' Handbook, Fourth Edition*, J. H. Perry, Editor, McGraw-Hill Book Company, New York, NY, 1963.

3. *Background Information Document For Industrial Boilers*, EPA-450/3-82-006a, U. S. Environmental Protection Agency, Research Triangle Park, NC, March 1982.

4. *Background Information Document For Small Steam Generating Units*, EPA-450/3-87-000, U. S . Environmental Protection Agency, Research Triangle Park, NC, 1987.

5. J. L. Muhlbaier, "Particulate and Gaseous Emissions From Natural Gas Furnaces and Water Heaters", *Journal Of The Air Pollution Control Association*, December 1981.

6. L. P. Nelson, *et al.*, *Global Combustion Sources Of Nitrous Oxide Emissions*, Research Project 2333-4 Interim Report, Sacramento: Radian Corporation, 1991.

7. R. L. Peer, *et al.*, *Characterization Of Nitrous Oxide Emission Sources*, Prepared for the U. S. EPA Contract 68-D1-0031, Research Triangle Park, NC: Radian Corporation, 1995.

8. S. D. Piccot, *et al.*, *Emissions and Cost Estimates For Globally Significant Anthropogenic Combustion Sources Of $NO_x$, $N_2O$, $CH_4$, CO, and $CO_2$,* EPA Contract No. 68-02-4288, Research Triangle Park, NC: Radian Corporation, 1990.

9. *Sector-Specific Issues and Reporting Methodologies Supporting the General Guidelines for the Voluntary Reporting of Greenhouse Gases under Section 1605(b) of the Energy Policy Act of 1992* (1994) DOE/PO-0028, Volume 2 of 3, U.S. Department of Energy.

10. J. P. Kesselring and W. V. Krill, "A Low-$NO_x$ Burner For Gas-Fired Firetube Boilers", *Proceedings: 1985 Symposium On Stationary Combustion $NO_x$ Control, Volume 2*, EPRI CS-4360, Electric Power Research Institute, Palo Alto, CA, January 1986.

11. *Emission Factor Documentation for AP-42 Section 1.4—Natural Gas Combustion*, Technical Support Division, Office of Air Quality Planning and Standards, U. S. Environmental Protection Agency, Research Triangle Park, NC, 1997.

12. *Alternate Control Techniques Document - $NO_x$ Emissions from Utility Boilers*, EPA-453/R-94-023, U. S. Environmental Protection Agency, Research Triangle Park, NC, March 1994.

United States
Environmental Protection
Agency

Office of Air Quality
Planning and Standards
Research Triangle Park NC 27711

EPA-453/R-95-017
November 1995

Air

EPA

# Protocol for Equipment Leak Emission Estimates

TABLE 2-4. OIL AND GAS PRODUCTION OPERATIONS AVERAGE EMISSION FACTORS (kg/hr/source)

| Equipment Type | Service[a] | Emission Factor (kg/hr/source)[b] |
|---|---|---|
| Valves | Gas | 4.5E-03 |
| | Heavy Oil | 8.4E-06 |
| | Light Oil | 2.5E-03 |
| | Water/Oil | 9.8E-05 |
| Pump seals | Gas | 2.4E-03 |
| | Heavy Oil | NA |
| | Light Oil | 1.3E-02 |
| | Water/Oil | 2.4E-05 |
| Others[c] | Gas | 8.8E-03 |
| | Heavy Oil | 3.2E-05 |
| | Light Oil | 7.5E-03 |
| | Water/Oil | 1.4E-02 |
| Connectors | Gas | 2.0E-04 |
| | Heavy Oil | 7.5E-06 |
| | Light Oil | 2.1E-04 |
| | Water/Oil | 1.1E-04 |
| Flanges | Gas | 3.9E-04 |
| | Heavy Oil | 3.9E-07 |
| | Light Oil | 1.1E-04 |
| | Water/Oil | 2.9E-06 |
| Open-ended lines | Gas | 2.0E-03 |
| | Heavy Oil | 1.4E-04 |
| | Light Oil | 1.4E-03 |
| | Water/Oil | 2.5E-04 |

[a]Water/Oil emission factors apply to water streams in oil service with a water content greater than 50%, from the point of origin to the point where the water content reaches 99%. For water streams with a water content greater than 99%, the emission rate is considered negligible.

[b]These factors are for total organic compound emission rates (including non-VOC's such as methane and ethane) and apply to light crude, heavy crude, gas plant, gas production, and off shore facilities. "NA" indicates that not enough data were available to develop the indicated emission factor.

[c]The "other" equipment type was derived from compressors, diaphrams, drains, dump arms, hatches, instruments, meters, pressure relief valves, polished rods, relief valves, and vents. This "other" equipment type should be applied for any equipment type other than connectors, flanges, open-ended lines, pumps, or valves.

## 13.2.2 Unpaved Roads

### 13.2.2.1 General

When a vehicle travels an unpaved road, the force of the wheels on the road surface causes pulverization of surface material. Particles are lifted and dropped from the rolling wheels, and the road surface is exposed to strong air currents in turbulent shear with the surface. The turbulent wake behind the vehicle continues to act on the road surface after the vehicle has passed.

The particulate emission factors presented in the previous draft version of this section of AP-42, dated October 2001, implicitly included the emissions from vehicles in the form of exhaust, brake wear, and tire wear as well as resuspended road surface material[25]. EPA included these sources in the emission factor equation for unpaved public roads (equation 1b in this section) since the field testing data used to develop the equation included both the direct emissions from vehicles and emissions from resuspension of road dust.

This version of the unpaved public road emission factor equation only estimates particulate emissions from resuspended road surface material [23, 26]. The particulate emissions from vehicle exhaust, brake wear, and tire wear are now estimated separately using EPA's MOBILE6.2 [24]. This approach eliminates the possibility of double counting emissions. Double counting results when employing the previous version of the emission factor equation in this section and MOBILE6.2 to estimate particulate emissions from vehicle traffic on unpaved public roads. It also incorporates the decrease in exhaust emissions that has occurred since the unpaved public road emission factor equation was developed. The previous version of the unpaved public road emission factor equation includes estimates of emissions from exhaust, brake wear, and tire wear based on emission rates for vehicles in the 1980 calendar year fleet. The amount of PM released from vehicle exhaust has decreased since 1980 due to lower new vehicle emission standards and changes in fuel characteristics.

### 13.2.2.2 Emissions Calculation And Correction Parameters[1-6]

The quantity of dust emissions from a given segment of unpaved road varies linearly with the volume of traffic. Field investigations also have shown that emissions depend on source parameters that characterize the condition of a particular road and the associated vehicle traffic. Characterization of these source parameters allow for "correction" of emission estimates to specific road and traffic conditions present on public and industrial roadways.

Dust emissions from unpaved roads have been found to vary directly with the fraction of silt (particles smaller than 75 micrometers [μm] in diameter) in the road surface materials.[1] The silt fraction is determined by measuring the proportion of loose dry surface dust that passes a 200-mesh screen, using the ASTM-C-136 method. A summary of this method is contained in Appendix C of AP-42. Table 13.2.2-1 summarizes measured silt values for industrial unpaved roads. Table 13.2.2-2 summarizes measured silt values for public unpaved roads. It should be noted that the ranges of silt content vary over two orders of magnitude. Therefore, the use of data from this table can potentially introduce considerable error. Use of this data is strongly discouraged when it is feasible to obtain locally gathered data.

Since the silt content of a rural dirt road will vary with geographic location, it should be measured for use in projecting emissions. As a conservative approximation, the silt content of the parent soil in the area can be used. Tests, however, show that road silt content is normally lower than in the surrounding parent soil, because the fines are continually removed by the vehicle traffic, leaving a higher percentage of coarse particles.

Other variables are important in addition to the silt content of the road surface material. For example, at industrial sites, where haul trucks and other heavy equipment are common, emissions are highly correlated with vehicle weight. On the other hand, there is far less variability in the weights of cars and pickup trucks that commonly travel publicly accessible unpaved roads throughout the United States. For those roads, the moisture content of the road surface material may be more dominant in determining differences in emission levels between, for example a hot, desert environment and a cool, moist location.

The PM-10 and TSP emission factors presented below are the outcomes from stepwise linear regressions of field emission test results of vehicles traveling over unpaved surfaces. Due to a limited amount of information available for PM-2.5, the expression for that particle size range has been scaled against the result for PM-10. Consequently, the quality rating for the PM-2.5 factor is lower than that for the PM-10 expression.

Table 13.2.2-1. TYPICAL SILT CONTENT VALUES OF SURFACE MATERIAL ON INDUSTRIAL UNPAVED ROADS[a]

| Industry | Road Use Or Surface Material | Plant Sites | No. Of Samples | Silt Content (%) | |
|---|---|---|---|---|---|
| | | | | Range | Mean |
| Copper smelting | Plant road | 1 | 3 | 16 - 19 | 17 |
| Iron and steel production | Plant road | 19 | 135 | 0.2 - 19 | 6.0 |
| Sand and gravel processing | Plant road | 1 | 3 | 4.1 - 6.0 | 4.8 |
| | Material storage area | 1 | 1 | - | 7.1 |
| Stone quarrying and processing | Plant road | 2 | 10 | 2.4 - 16 | 10 |
| | Haul road to/from pit | 4 | 20 | 5.0-15 | 8.3 |
| Taconite mining and processing | Service road | 1 | 8 | 2.4 - 7.1 | 4.3 |
| | Haul road to/from pit | 1 | 12 | 3.9 - 9.7 | 5.8 |
| Western surface coal mining | Haul road to/from pit | 3 | 21 | 2.8 - 18 | 8.4 |
| | Plant road | 2 | 2 | 4.9 - 5.3 | 5.1 |
| | Scraper route | 3 | 10 | 7.2 - 25 | 17 |
| | Haul road (freshly graded) | 2 | 5 | 18 - 29 | 24 |
| Construction sites | Scraper routes | 7 | 20 | 0.56-23 | 8.5 |
| Lumber sawmills | Log yards | 2 | 2 | 4.8-12 | 8.4 |
| Municipal solid waste landfills | Disposal routes | 4 | 20 | 2.2 - 21 | 6.4 |

[a]References 1,5-15.

The following empirical expressions may be used to estimate the quantity in pounds (lb) of size-specific particulate emissions from an unpaved road, per vehicle mile traveled (VMT):

For vehicles traveling on unpaved surfaces at industrial sites, emissions are estimated from the following equation:

$$E = k\,(s/12)^a (W/3)^b \tag{1a}$$

and, for vehicles traveling on publicly accessible roads, dominated by light duty vehicles, emissions may be estimated from the following:

$$E = \frac{k\,(s/12)^a (S/30)^d}{(M/0.5)^c} - C \tag{1b}$$

where k, a, b, c and d are empirical constants (Reference 6) given below and

E = size-specific emission factor (lb/VMT)
s = surface material silt content (%)
W = mean vehicle weight (tons)
M = surface material moisture content (%)
S = mean vehicle speed (mph)
*C* = emission factor for 1980's vehicle fleet exhaust, brake wear and tire wear.

The source characteristics s, W and M are referred to as correction parameters for adjusting the emission estimates to local conditions. The metric conversion from lb/VMT to grams (g) per vehicle kilometer traveled (VKT) is as follows:

1 lb/VMT = 281.9 g/VKT

The constants for Equations 1a and 1b based on the stated aerodynamic particle sizes are shown in Tables 13.2.2-2 and 13.2.2-4. The PM-2.5 particle size multipliers (k-factors) are taken from Reference 27.

Table 13.2.2-2. CONSTANTS FOR EQUATIONS 1a AND 1b

| Constant | Industrial Roads (Equation 1a) | | | Public Roads (Equation 1b) | | |
|---|---|---|---|---|---|---|
| | PM-2.5 | PM-10 | PM-30* | PM-2.5 | PM-10 | PM-30* |
| k (lb/VMT) | 0.15 | 1.5 | 4.9 | 0.18 | 1.8 | 6.0 |
| a | 0.9 | 0.9 | 0.7 | 1 | 1 | 1 |
| b | 0.45 | 0.45 | 0.45 | - | - | - |
| c | - | - | - | 0.2 | 0.2 | 0.3 |
| d | - | - | - | 0.5 | 0.5 | 0.3 |
| Quality Rating | B | B | B | B | B | B |

*Assumed equivalent to total suspended particulate matter (TSP)
"-" = not used in the emission factor equation

Table 13.2.2-2 also contains the quality ratings for the various size-specific versions of Equation 1a and 1b. The equation retains the assigned quality rating, if applied within the ranges of source conditions, shown in Table 13.2.2-3, that were tested in developing the equation:

Table 13.2.2-3. RANGE OF SOURCE CONDITIONS USED IN DEVELOPING EQUATION 1a AND 1b

| Emission Factor | Surface Silt Content, % | Mean Vehicle Weight | | Mean Vehicle Speed | | Mean No. of Wheels | Surface Moisture Content, % |
|---|---|---|---|---|---|---|---|
| | | Mg | ton | km/hr | mph | | |
| Industrial Roads (Equation 1a) | 1.8-25.2 | 1.8-260 | 2-290 | 8-69 | 5-43 | 4-17[a] | 0.03-13 |
| Public Roads (Equation 1b) | 1.8-35 | 1.4-2.7 | 1.5-3 | 16-88 | 10-55 | 4-4.8 | 0.03-13 |

[a] See discussion in text.

As noted earlier, the models presented as Equations 1a and 1b were developed from tests of traffic on unpaved surfaces. Unpaved roads have a hard, generally nonporous surface that usually dries quickly after a rainfall or watering, because of traffic-enhanced natural evaporation. (Factors influencing how fast a road dries are discussed in Section 13.2.2.3, below.) The quality ratings given above pertain to the mid-range of the measured source conditions for the equation. A higher mean vehicle weight and a higher than normal traffic rate may be justified when performing a worst-case analysis of emissions from unpaved roads.

The emission factors for the exhaust, brake wear and tire wear of a 1980's vehicle fleet (*C*) was obtained from EPA's MOBILE6.2 model [23]. The emission factor also varies with aerodynamic size range

as shown in Table 13.2.2-4

Table 13.2.2-4. EMISSION FACTOR FOR 1980'S VEHICLE FLEET EXHAUST, BRAKE WEAR AND TIRE WEAR

| Particle Size Range[a] | *C*, Emission Factor for Exhaust, Brake Wear and Tire Wear[b] lb/VMT |
|---|---|
| $PM_{2.5}$ | 0.00036 |
| $PM_{10}$ | 0.00047 |
| $PM_{30}$[c] | 0.00047 |

[a] Refers to airborne particulate matter (PM-x) with an aerodynamic diameter equal to or less than x micrometers.
[b] Units shown are pounds per vehicle mile traveled (lb/VMT).
[c] PM-30 is sometimes termed "suspendable particulate" (SP) and is often used as a surrogate for TSP.

It is important to note that the vehicle-related source conditions refer to the average weight, speed, and number of wheels for all vehicles traveling the road. For example, if 98 percent of traffic on the road are 2-ton cars and trucks while the remaining 2 percent consists of 20-ton trucks, then the mean weight is 2.4 tons. More specifically, Equations 1a and 1b are *not* intended to be used to calculate a separate emission factor for each vehicle class within a mix of traffic on a given unpaved road. That is, in the example, one should *not* determine one factor for the 2-ton vehicles and a second factor for the 20-ton trucks. Instead, only one emission factor should be calculated that represents the "fleet" average of 2.4 tons for all vehicles traveling the road.

Moreover, to retain the quality ratings when addressing a group of unpaved roads, it is necessary that reliable correction parameter values be determined for the road in question. The field and laboratory procedures for determining road surface silt and moisture contents are given in AP-42 Appendices C.1 and C.2. Vehicle-related parameters should be developed by recording visual observations of traffic. In some cases, vehicle parameters for industrial unpaved roads can be determined by reviewing maintenance records or other information sources at the facility.

In the event that site-specific values for correction parameters cannot be obtained, then default values may be used.In the absence of site-specific silt content information, an appropriate mean value from Table 13.2.2-1 may be used as a default value, but the quality rating of the equation is reduced by two letters. Because of significant differences found between different types of road surfaces and between different areas of the country, use of the default moisture content value of 0.5 percent in Equation 1b is discouraged. The quality rating should be downgraded two letters when the default moisture content value is used. (It is assumed that readers addressing industrial roads have access to the information needed to develop average vehicle information in Equation 1a for their facility.)

The effect of routine watering to control emissions from unpaved roads is discussed below in Section 13.2.2.3, “Controls”. However, all roads are subject to some natural mitigation because of rainfall and other precipitation. The Equation 1a and 1b emission factors can be extrapolated to annual

average uncontrolled conditions (but including natural mitigation) under the simplifying assumption that annual average emissions are inversely proportional to the number of days with measurable (more than 0.254 mm [0.01 inch]) precipitation:

$$E_{ext} = E\ [(365 - P)/365] \qquad (2)$$

where:

$E_{ext}$ = annual size-specific emission factor extrapolated for natural mitigation, lb/VMT

E = emission factor from Equation 1a or 1b

P = number of days in a year with at least 0.254 mm (0.01 in) of precipitation (see below)

Figure 13.2.2-1 gives the geographical distribution for the mean annual number of "wet" days for the United States.

Equation 2 provides an estimate that accounts for precipitation on an annual average basis for the purpose of inventorying emissions. It should be noted that Equation 2 does not account for differences in the temporal distributions of the rain events, the quantity of rain during any event, or the potential for the rain to evaporate from the road surface. In the event that a finer temporal and spatial resolution is desired for inventories of public unpaved roads, estimates can be based on a more complex set of assumptions. These assumptions include:

1. The moisture content of the road surface material is increased in proportion to the quantity of water added;
2. The moisture content of the road surface material is reduced in proportion to the Class A pan evaporation rate;
3. The moisture content of the road surface material is reduced in proportion to the traffic volume; and
4. The moisture content of the road surface material varies between the extremes observed in the area. The CHIEF Web site (http://www.epa.gov/ttn/chief/ap42/ch13/related/c13s02-2.html) has a file which contains a spreadsheet program for calculating emission factors which are temporally and spatially resolved. Information required for use of the spreadsheet program includes monthly Class A pan evaporation values, hourly meteorological data for precipitation, humidity and snow cover, vehicle traffic information, and road surface material information.

It is emphasized that <u>the simple assumption underlying Equation 2 and the more complex set of assumptions underlying the use of the procedure which produces a finer temporal and spatial resolution</u> have not been verified in any rigorous manner. For this reason, the quality ratings for either approach should be downgraded one letter from the rating that would be applied to Equation 1.

### 13.2.2.3 Controls[18-22]

A wide variety of options exist to control emissions from unpaved roads. Options fall into the following three groupings:

1. <u>Vehicle restrictions</u> that limit the speed, weight or number of vehicles on the road;

2. Surface improvement, by measures such as (a) paving or (b) adding gravel or slag to a dirt road; and

3. Surface treatment, such as watering or treatment with chemical dust suppressants.

Available control options span broad ranges in terms of cost, efficiency, and applicability. For example, traffic controls provide moderate emission reductions (often at little cost) but are difficult to enforce. Although paving is highly effective, its high initial cost is often prohibitive. Furthermore, paving is not feasible for industrial roads subject to very heavy vehicles and/or spillage of material in transport. Watering and chemical suppressants, on the other hand, are potentially applicable to most industrial roads at moderate to low costs. However, these require frequent reapplication to maintain an acceptable level of control. Chemical suppressants are generally more cost-effective than water but not in cases of temporary roads (which are common at mines, landfills, and construction sites). In summary, then, one needs to consider not only the type and volume of traffic on the road but also how long the road will be in service when developing control plans.

Vehicle restrictions. These measures seek to limit the amount and type of traffic present on the road or to lower the mean vehicle speed. For example, many industrial plants have restricted employees from driving on plant property and have instead instituted bussing programs. This eliminates emissions due to employees traveling to/from their worksites. Although the heavier average vehicle weight of the busses increases the base emission factor, the decrease in vehicle-miles-traveled results in a lower overall emission rate.

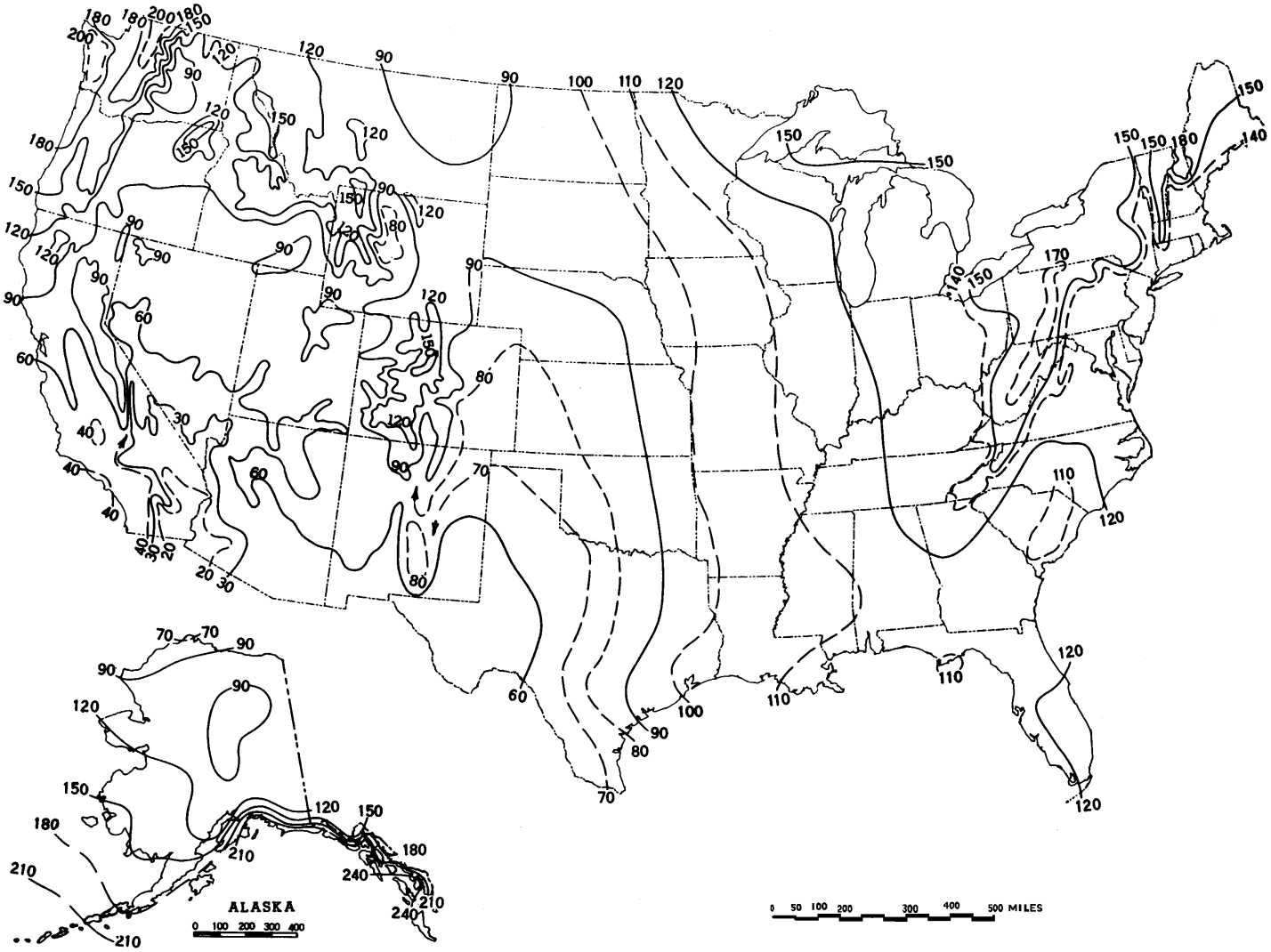


Figure 13.2.2-1. Mean number of days with 0.01 inch or more of precipitation in United States.

Surface improvements. Control options in this category alter the road surface. As opposed to the "surface treatments" discussed below, improvements are relatively "permanent" and do not require periodic retreatment.

The most obvious surface improvement is paving an unpaved road. This option is quite expensive and is probably most applicable to relatively short stretches of unpaved road with at least several hundred vehicle passes per day. Furthermore, if the newly paved road is located near unpaved areas or is used to transport material, it is essential that the control plan address routine cleaning of the newly paved road surface.

The control efficiencies achievable by paving can be estimated by comparing emission factors for unpaved and paved road conditions. The predictive emission factor equation for paved roads, given in Section 13.2.1, requires estimation of the silt loading on the traveled portion of the paved surface, which in turn depends on whether the pavement is periodically cleaned. Unless curbing is to be installed, the effects of vehicle excursion onto unpaved shoulders (berms) also must be taken into account in estimating the control efficiency of paving.

Other improvement methods cover the road surface with another material that has a lower silt content. Examples include placing gravel or slag on a dirt road. Control efficiency can be estimated by comparing the emission factors obtained using the silt contents before and after improvement. The silt content of the road surface should be determined after 3 to 6 months rather than immediately following placement. Control plans should address regular maintenance practices, such as grading, to retain larger aggregate on the traveled portion of the road.

Surface treatments refer to control options which require periodic reapplication. Treatments fall into the two main categories of (a) "wet suppression" (i. e., watering, possibly with surfactants or other additives), which keeps the road surface wet to control emissions and (b) "chemical stabilization/ treatment", which attempts to change the physical characteristics of the surface. The necessary reapplication frequency varies from several minutes for plain water under summertime conditions to several weeks or months for chemical dust suppressants.

Watering increases the moisture content, which conglomerates particles and reduces their likelihood to become suspended when vehicles pass over the surface. The control efficiency depends on how fast the road dries after water is added. This in turn depends on (a) the amount (per unit road surface area) of water added during each application; (b) the period of time between applications; (c) the weight, speed and number of vehicles traveling over the watered road during the period between applications; and (d) meteorological conditions (temperature, wind speed, cloud cover, etc.) that affect evaporation during the period.

Figure 13.2.2-2 presents a simple bilinear relationship between the instantaneous control efficiency due to watering and the resulting increase in surface moisture. The moisture ratio "M" (i.e., the x-axis in Figure 13.2.2-2) is found by dividing the surface moisture content of the watered road by the surface moisture content of the uncontrolled road. As the watered road surface dries, both the ratio M and the predicted instantaneous control efficiency (i.e., the y-axis in the figure) decrease. The figure shows that between the uncontrolled moisture content and a value twice as large, a small increase in moisture content results in a large increase in control efficiency. Beyond that, control efficiency grows slowly with increased moisture content.

Given the complicated nature of how the road dries, characterization of emissions from watered roadways is best done by collecting road surface material samples at various times between water truck passes. (Appendices C.1 and C.2 present the sampling and analysis procedures.) The moisture content measured can then be associated with a control efficiency by use of Figure 13.2.2-2. Samples that reflect average conditions during the watering cycle can take the form of either a series of samples between water applications or a single sample at the midpoint. It is essential that samples be collected during periods with active traffic on the road. Finally, because of different evaporation rates, it is recommended that samples be collected at various times during the year. If only one set of samples is to be collected, these must be collected during hot, summertime conditions.

When developing watering control plans for roads that do not yet exist, it is strongly recommended that the moisture cycle be established by sampling similar roads in the same geographic area. If the moisture cycle cannot be established by similar roads using established watering control plans, the more complex methodology used to estimate the mitigation of rainfall and other precipitation can be used to estimate the control provided by routine watering. An estimate of the maximum daytime Class A pan evaporation (based upon daily evaporation data published in the monthly Climatological Data for the state by the National Climatic Data Center) should be used to insure that adequate watering capability is available during periods of highest evaporation. The hourly precipitation values in the spreadsheet should be replaced with the equivalent inches of precipitation (where the equivalent of 1 inch of precipitation is provided by an application of 5.6 gallons of water per square yard of road). Information on the long term average annual evaporation and on the percentage that occurs between May and October was published in the Climatic Atlas (Reference 16). Figure 13.2.2-3 presents the geographical distribution for "Class A pan evaporation" throughout the United States. Figure 13.2.2-4 presents the geographical distribution of the percentage of this evaporation that occurs between May and October. The U. S. Weather Bureau Class A evaporation pan is a cylindrical metal container with a depth of 10 inches and a diameter of 48 inches. Periodic measurements are made of the changes of the water level.

The above methodology should be used <u>only for prospective analyses</u> and for designing watering programs for existing roadways. The quality rating of an emission factor for a watered road that is based on this methodology should be downgraded two letters. Periodic road surface samples should be collected and analyzed to verify the efficiency of the watering program.

As opposed to watering, chemical dust suppressants have much less frequent reapplication requirements. These materials suppress emissions by changing the physical characteristics of the existing road surface material. Many chemical unpaved road dust suppressants form a hardened surface that binds particles together. After several applications, a treated road often resembles a paved road except that the surface is not uniformly flat. Because the improved surface results in more grinding of small particles, the silt content of loose material on a highly controlled surface may be substantially higher than when the surface was uncontrolled. For this reason, the models presented as Equations 1a and 1b cannot be used to estimate emissions from chemically stabilized roads. Should the road be allowed to return to an

uncontrolled state with no visible signs of large-scale cementing of material, the Equation 1a and 1b emission factors could then be used to obtain conservatively high emission estimates.

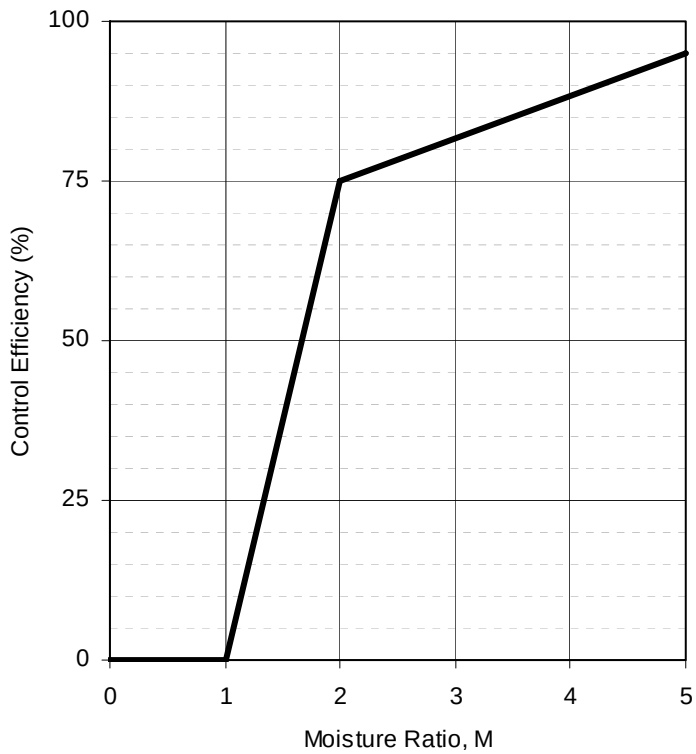


Figure 13.2.2-2. Watering control effectiveness for unpaved travel surfaces

The control effectiveness of chemical dust suppressants appears to depend on (a) the dilution rate used in the mixture; (b) the application rate (volume of solution per unit road surface area); (c) the time between applications; (d) the size, speed and amount of traffic during the period between applications; and (e) meteorological conditions (rainfall, freeze/thaw cycles, etc.) during the period. Other factors that affect the performance of dust suppressants include other traffic characteristics (e. g., cornering, track-on from unpaved areas) and road characteristics (e. g., bearing strength, grade). The variabilities in the above factors and differences between individual dust control products make the control efficiencies of chemical dust suppressants difficult to estimate. Past field testing of emissions from controlled unpaved roads has shown that chemical dust suppressants provide a PM-10 control efficiency of about 80 percent when applied at regular intervals of 2 weeks to 1 month.

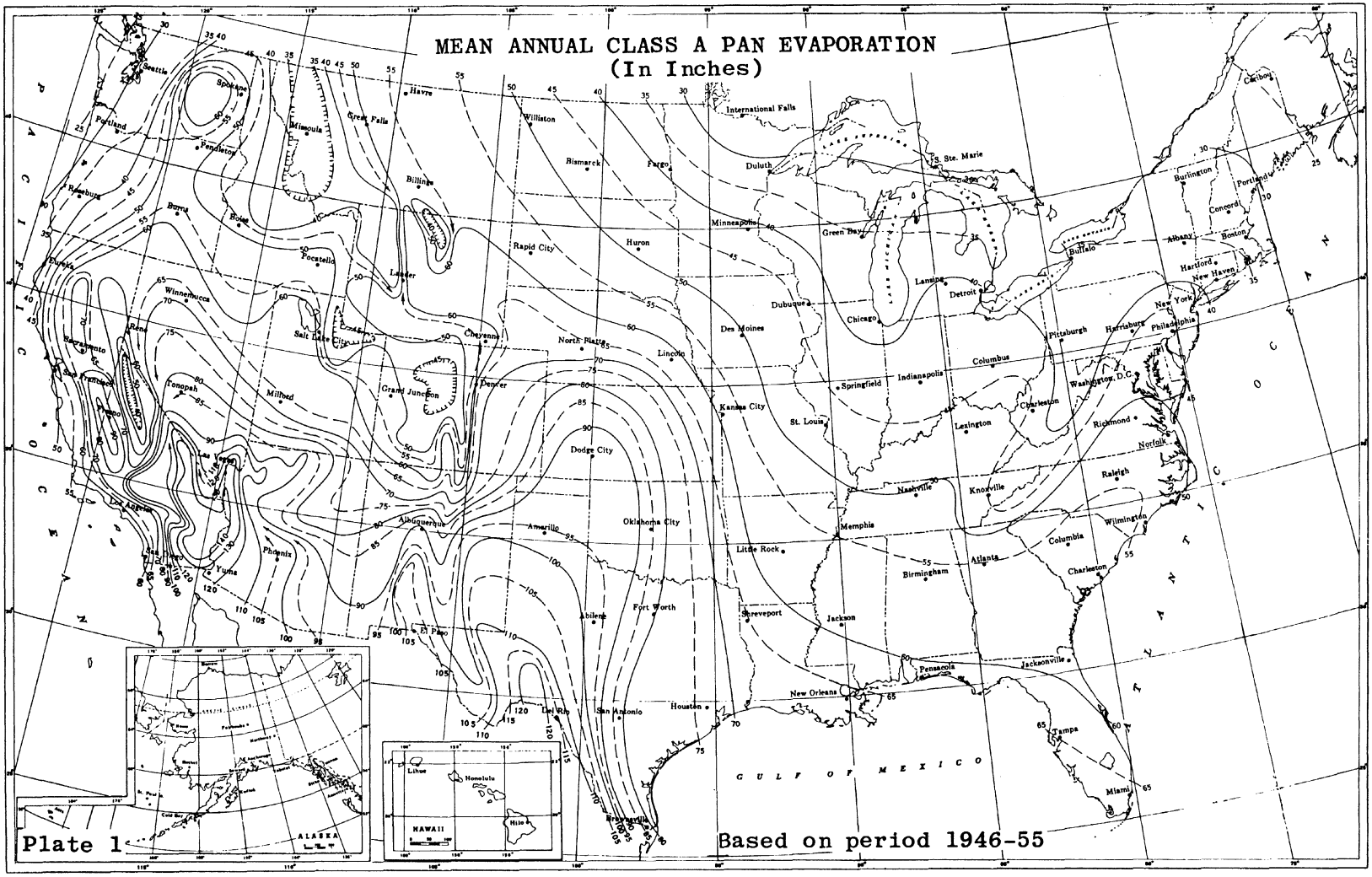


Figure 13.2.2-3. Annual evaporation data.

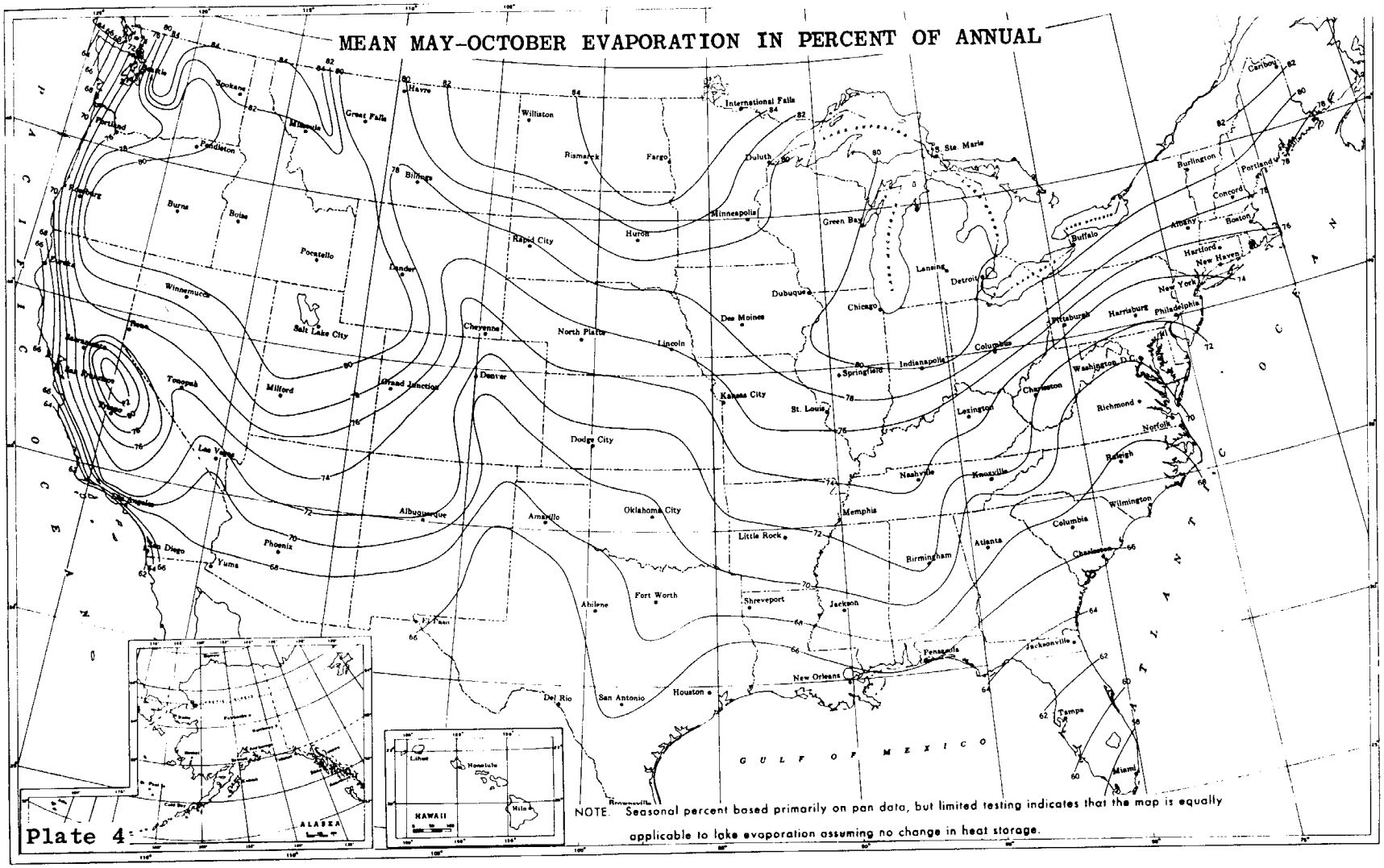


Figure 13.2.2-4. Geographical distribution of the percentage of evaporation occurring between May and October.

Petroleum resin products historically have been the dust suppressants (besides water) most widely used on industrial unpaved roads. Figure 13.2.2-5 presents a method to estimate average control efficiencies associated with petroleum resins applied to unpaved roads.[20] Several items should be noted:

1. The term "ground inventory" represents the total volume (per unit area) of petroleum resin concentrate (*not solution*) applied since the start of the dust control season.

2. Because petroleum resin products must be periodically reapplied to unpaved roads, the use of a time-averaged control efficiency value is appropriate. Figure 13.2.2-5 presents control efficiency values averaged over two common application intervals, 2 weeks and 1 month. Other application intervals will require interpolation.

3. Note that zero efficiency is assigned until the ground inventory reaches 0.05 gallon per square yard (gal/yd$^2$). Requiring a minimum ground inventory ensures that one must apply a reasonable amount of chemical dust suppressant to a road before claiming credit for emission control. Recall that the ground inventory refers to the amount of petroleum resin concentrate rather than the total solution.

As an example of the application of Figure 13.2.2-5, suppose that Equation 1a was used to estimate an emission factor of 7.1 lb/VMT for PM-10 from a particular road. Also, suppose that, starting on May 1, the road is treated with 0.221 gal/yd$^2$ of a solution (1 part petroleum resin to 5 parts water) on the first of each month through September. Then, the average controlled emission factors, shown in Table 13.2.2-5, are found.

Table 13.2-2-5. EXAMPLE OF AVERAGE CONTROLLED EMISSION FACTORS FOR SPECIFIC CONDITIONS

| Period | Ground Inventory, gal/yd$^2$ | Average Control Efficiency, %[a] | Average Controlled Emission Factor, lb/VMT |
|---|---|---|---|
| May | 0.037 | 0 | 7.1 |
| June | 0.073 | 62 | 2.7 |
| July | 0.11 | 68 | 2.3 |
| August | 0.15 | 74 | 1.8 |
| September | 0.18 | 80 | 1.4 |

[a] From Figure 13.2.2-5, $\leq$10 µm. Zero efficiency assigned if ground inventory is less than 0.05 gal/yd$^2$. 1 lb/VMT = 281.9 g/VKT. 1 gal/yd$^2$ = 4.531 L/m$^2$.

Besides petroleum resins, other newer dust suppressants have also been successful in controlling emissions from unpaved roads. Specific test results for those chemicals, as well as for petroleum resins and watering, are provided in References 18 through 21.

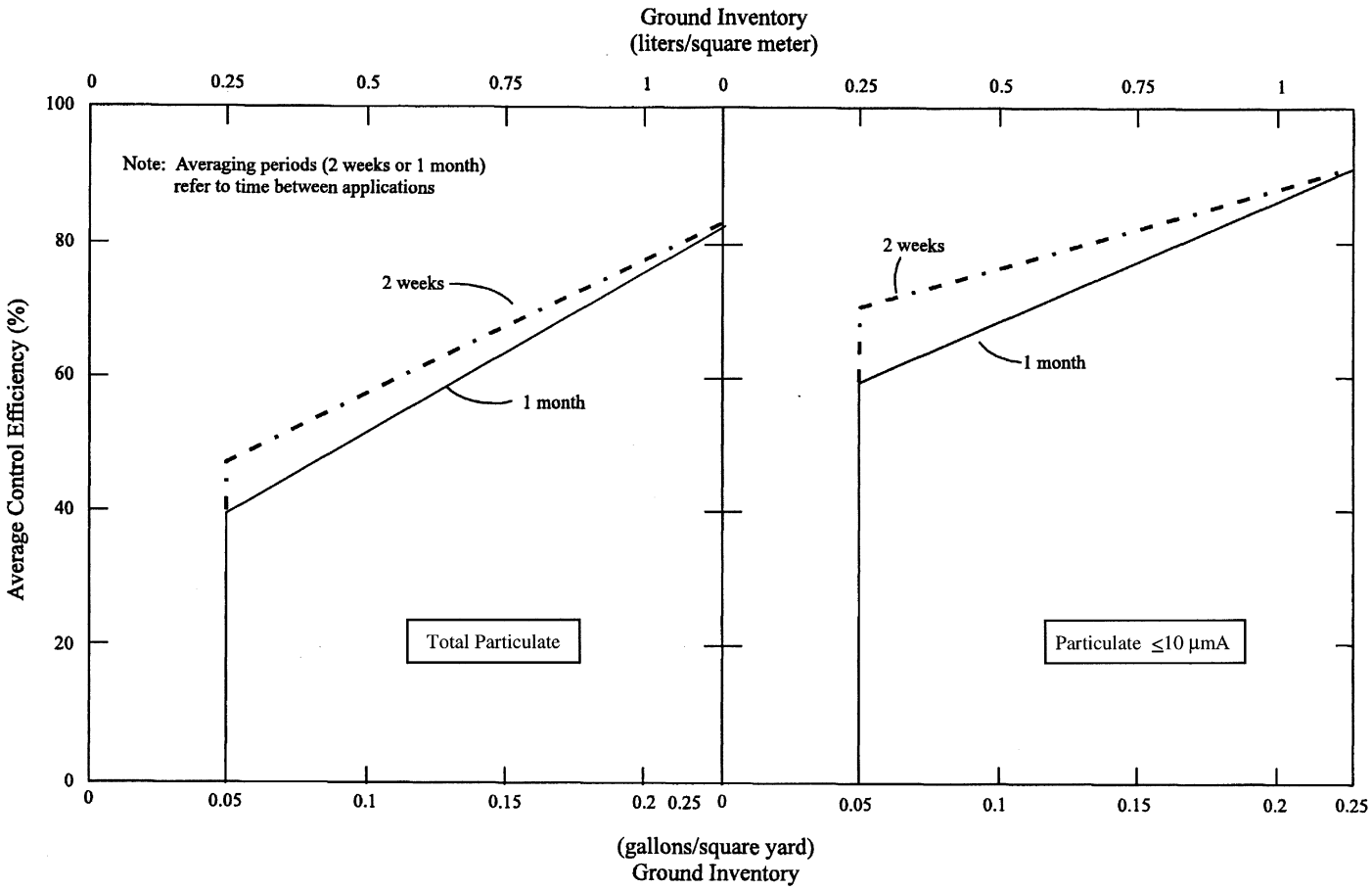


Figure 13.2.2-5. Average control efficiencies over common application intervals.

13.2.2.4 Updates Since The Fifth Edition

The Fifth Edition was released in January 1995. Revisions to this section since that date are summarized below. For further detail, consult the background report for this section (Reference 6).

October 1998 (Supplement E)– This was a major revision of this section. Significant changes to the text and the emission factor equations were made.

October 2001 – Separate emission factors for unpaved surfaces at industrial sites and publicly accessible roads were introduced. Figure 13.2.2-2 was included to provide control effectiveness estimates for watered roads.

December 2003 – The public road emission factor equation (equation 1b) was adjusted to remove the component of particulate emissions from exhaust, brake wear, and tire wear. The parameter $C$ in the new equation varies with aerodynamic size range of the particulate matter. Table 13.2.2-4 was added to present the new coefficients.

January 2006 – The PM-2.5 particle size multipliers (i.e., factors) in Table 13.2.2-2 were modified and the quality ratings were upgraded from C to B based on the wind tunnel studies of a variety of dust emitting surface materials.

References For Section 13.2.2


1. C. Cowherd, Jr., *et al.*, *Development Of Emission Factors For Fugitive Dust Sources*, EPA-450/3-74-037, U. S. Environmental Protection Agency, Research Triangle Park, NC, June 1974.

2. R. J. Dyck and J. J. Stukel, "Fugitive Dust Emissions From Trucks On Unpaved Roads", *Environmental Science And Technology, 10*(10):1046-1048, October 1976.

3. R. O. McCaldin and K. J. Heidel, "Particulate Emissions From Vehicle Travel Over Unpaved Roads", Presented at the 71st Annual Meeting of the Air Pollution Control Association, Houston, TX, June 1978.

4. C. Cowherd, Jr, *et al.*, *Iron And Steel Plant Open Dust Source Fugitive Emission Evaluation*, EPA-600/2-79-013, U. S. Environmental Protection Agency, Cincinnati, OH, May 1979.

5. G. Muleski, *Unpaved Road Emission Impact*, Arizona Department of Environmental Quality, Phoenix, AZ, March 1991.

6. *Emission Factor Documentation For AP-42, Section 13.2.2, Unpaved Roads, Final Report*, Midwest Research Institute, Kansas City, MO, September 1998.

7. T. Cuscino, Jr., *et al.*, *Taconite Mining Fugitive Emissions Study*, Minnesota Pollution Control Agency, Roseville, MN, June 1979.

8. *Improved Emission Factors For Fugitive Dust From Western Surface Coal Mining Sources*, 2 Volumes, EPA Contract No. 68-03-2924, Office of Air Quality Planning and Standards, U. S. Environmental Protection Agency, Research Triangle Park, NC.

9. T. Cuscino, Jr., *et al.*, *Iron And Steel Plant Open Source Fugitive Emission Control Evaluation*, EPA-600/2-83-110, U. S. Environmental Protection Agency, Cincinnati, OH, October 1983.

10. *Size Specific Emission Factors For Uncontrolled Industrial And Rural Roads*, EPA Contract No. 68-02-3158, Midwest Research Institute, Kansas City, MO, September 1983.

11. C. Cowherd, Jr., and P. Englehart, *Size Specific Particulate Emission Factors For Industrial And Rural Roads*, EPA-600/7-85-038, U. S. Environmental Protection Agency, Cincinnati, OH, September 1985.

12. *PM-10 Emission Inventory Of Landfills In The Lake Calumet Area*, EPA Contract 68-02-3891, Work Assignment 30, Midwest Research Institute, Kansas City, MO, September 1987.

13. *Chicago Area Particulate Matter Emission Inventory — Sampling And Analysis*, EPA Contract No. 68-02-4395, Work Assignment 1, Midwest Research Institute, Kansas City, MO, May 1988.

14. *PM-10 Emissions Inventory Data For The Maricopa And Pima Planning Areas*, EPA Contract No. 68-02-3888, Engineering-Science, Pasadena, CA, January 1987.

15. *Oregon Fugitive Dust Emission Inventory*, EPA Contract 68-D0-0123, Midwest Research Institute, Kansas City, MO, January 1992.

16. *Climatic Atlas Of The United States*, U. S. Department Of Commerce, Washington, DC, June 1968.

17. National Climatic Data Center, *Solar And Meteorological Surface Observation Network 1961-1990*; 3 Volume CD-ROM. Asheville, NC, 1993.

18. C. Cowherd, Jr. *et al.*, *Control Of Open Fugitive Dust Sources*, EPA-450/3-88-008, U. S. Environmental Protection Agency, Research Triangle Park, NC, September 1988.

19. G. E. Muleski, *et al.*, *Extended Evaluation Of Unpaved Road Dust Suppressants In The Iron And Steel Industry*, EPA-600/2-84-027, U. S. Environmental Protection Agency, Cincinnati, OH, February 1984.

20. C. Cowherd, Jr., and J. S. Kinsey, *Identification, Assessment And Control Of Fugitive Particulate Emissions*, EPA-600/8-86-023, U. S. Environmental Protection Agency, Cincinnati, OH, August 1986.

21. G. E. Muleski and C. Cowherd, Jr., *Evaluation Of The Effectiveness Of Chemical Dust Suppressants On Unpaved Roads*, EPA-600/2-87-102, U. S. Environmental Protection Agency, Cincinnati, OH, November 1986.

22. *Fugitive Dust Background Document And Technical Information Document For Best Available Control Measures*, EPA-450/2-92-004, Office Of Air Quality Planning And Standards, U. S. Environmental Protection Agency, Research Triangle Park, NC, September 1992.

23. Written communication (Technical Memorandum) from P. Hemmer, E.H. Pechan & Associates, Inc., Durham, NC to B. Kuykendal, U. S. Environmental Protection Agency, Research Triangle Park, NC, August, 21, 2003.

24. MOBILE6 User Guide, United States Environmental Protection Agency, Office of Transportation and Air Quality. EPA420-R-02-028, October 2002.

25. Written communication (Technical Memorandum) from G. Muleski, Midwest Research Institute, Kansas City, MO, to B. Kuykendal, U. S. Environmental Protection Agency, Research Triangle Park, NC, Subject "Unpaved Roads", September 27, 2001.

26. Written communication (Technical Memorandum) from W. Kuykendal, U. S. Environmental Protection Agency, to File, Subject "Decisions on Final AP-42 Section 13.2.2 Unpaved Roads", November 24, 2003.

27. C. Cowherd, *Background Document for Revisions to Fine Fraction Ratios &sed for AP-42 Fugitive Dust Emission Factors*. Prepared by Midwest Research Institute for Western Governors Association, Western Regional Air Partnership, Denver, CO, February 1, 2006.

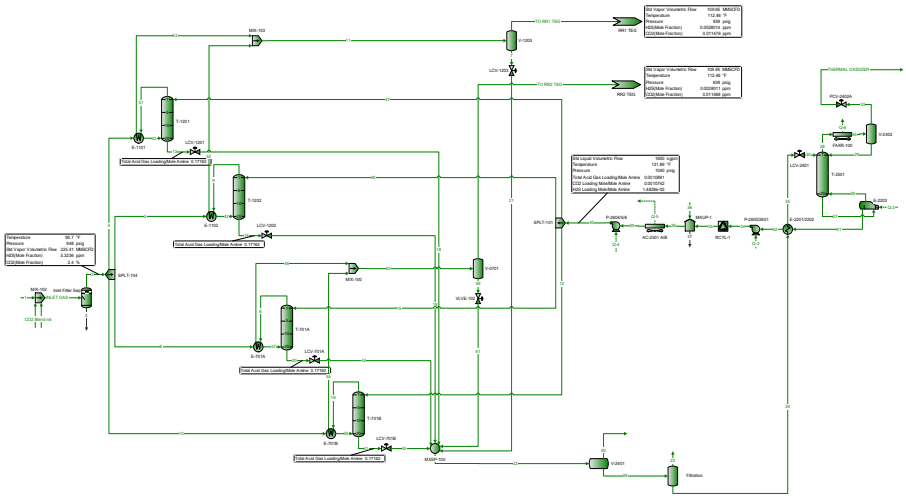

Temperature 80.7 °F
Pressure 946 psig
Std Vapor Volumetric Flow 225.41 MMSCFD
H2S(Mole Fraction) 3.3236 ppm
CO2(Mole Fraction) 2.4 %
MIX-103
Inlet Filter Sep
INLET GAS
CO2 Stretch
SPLT-104
MIX-102
E-1301
T-1301
LCV-1301
Total Acid Gas Loading/Mole Amine: 0.17182
E-1302
T-1302
LCV-1302
Total Acid Gas Loading/Mole Amine: 0.17182
MIX-100
E-701A
T-701A
LCV-701A
Total Acid Gas Loading/Mole Amine: 0.17182
E-701B
T-701B
LCV-701B
Total Acid Gas Loading/Mole Amine: 0.17182
MIXSP-100
V-701
VLVE-100
V-1203
LCV-1203
TO RR1 TEG
RR1 TEG
Std Vapor Volumetric Flow 109.99 MMSCFD
Temperature 112.46 °F
Pressure 939 psig
H2S(Mole Fraction) 0.0028016 ppm
CO2(Mole Fraction) 0.011458 ppm
TO RR2 TEG
RR2 TEG
Std Vapor Volumetric Flow 109.99 MMSCFD
Temperature 112.46 °F
Pressure 939 psig
H2S(Mole Fraction) 0.0028011 ppm
CO2(Mole Fraction) 0.011458 ppm
SPLT-101
P-2605/6/8
AC-2301 A/B
MIXUP-1
RC1L-1
P-2605/2601
E-2201/2202
LCV-2401
T-2401
E-2203
PCV-2403A
FAXR-100
V-2402
THERMAL OXIDIZER
V-2401
Filtration

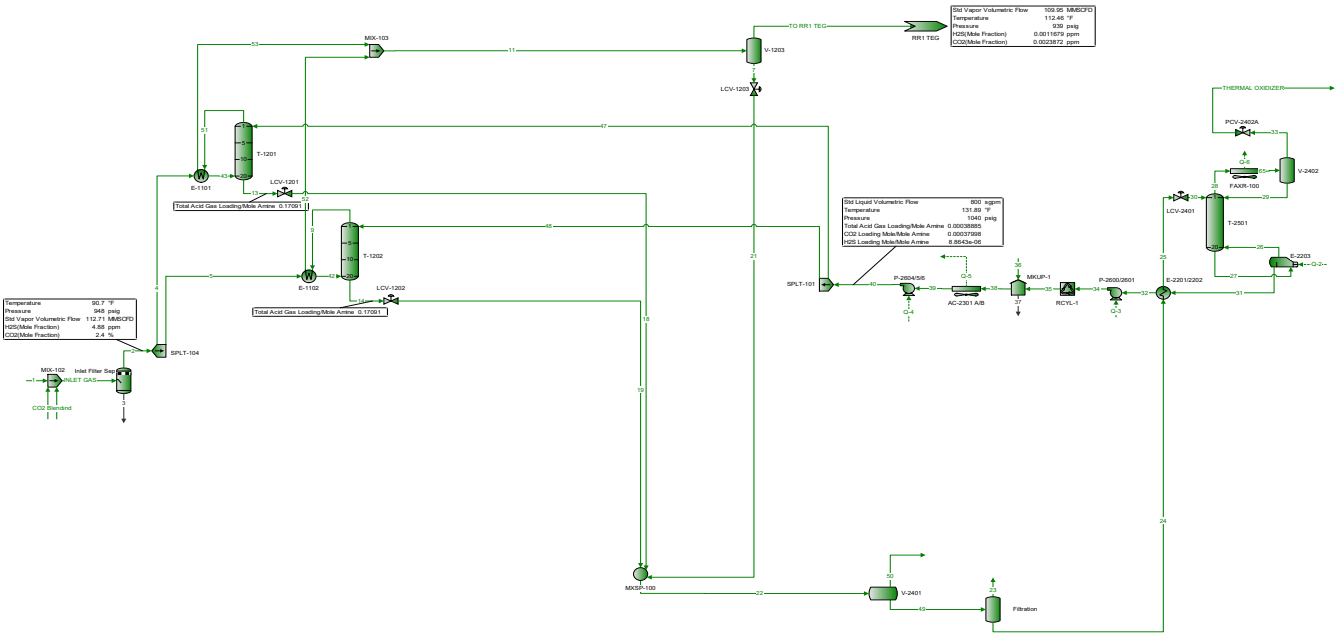
Std Vapor Volumetric Flow 109.95 MMSCFD
Temperature 112.46 °F
Pressure 939 psig
H2S(Mole Fraction) 0.0011679 ppm
CO2(Mole Fraction) 0.0023872 ppm
TO RR1 TEG
RR1 TEG
MIX-103
V-1203
LCV-1203
THERMAL OXIDIZER
PCV-2402A
V-2402
FAXR-100
LCV-2401
T-2501
E-2203
E-2301/2302
P-2600/2601
RCYL-1
MKUP-1
AC-2301 A/B
P-2604/5/6
SPLT-101
Std Liquid Volumetric Flow 800 sgpm
Temperature 131.89 °F
Pressure 1040 psig
Total Acid Gas Loading/Mole Amine 0.00038885
CO2 Loading Mole/Mole Amine 0.00037998
H2S Loading Mole/Mole Amine 8.8643e-06
T-1201
E-1101
LCV-1201
Total Acid Gas Loading/Mole Amine 0.17091
T-1202
E-1102
LCV-1202
Total Acid Gas Loading/Mole Amine 0.17091
Temperature 90.7 °F
Pressure 948 psig
Std Vapor Volumetric Flow 112.71 MMSCFD
H2S(Mole Fraction) 4.88 ppm
CO2(Mole Fraction) 2.4 %
SPLT-104
MIX-102
Inlet Filter Sep
INLET GAS
CO2 Blendnd
MIXSP-100
V-2401
Filtration

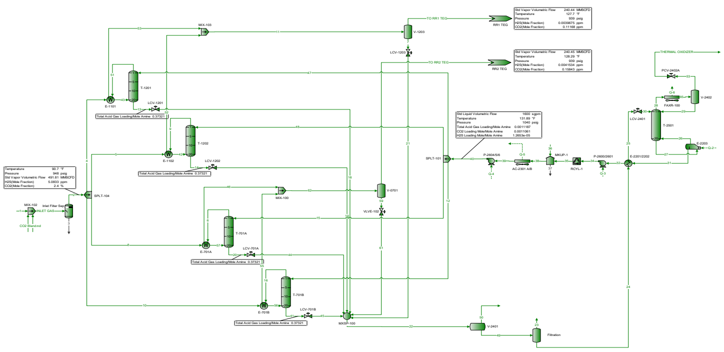

Temperature 90.7 °F
Pressure 948 psig
Std Vapor Volumetric Flow 491.81 MMBCFD
H2S(Mole Fraction) 5.0833 ppm
CO2(Mole Fraction) 2.4 %
MIX-102
INLET GAS
CO2 Blend ind
Inlet Filter Sep
SPLT-104
MIX-103
E-1101
T-1201
LCV-1201
Total Acid Gas Loading/Mole Amine 0.37321
E-1102
T-1202
LCV-1202
Total Acid Gas Loading/Mole Amine 0.37321
MIX-100
E-701A
T-701A
LCV-701A
Total Acid Gas Loading/Mole Amine 0.37321
E-701B
T-701B
LCV-701B
Total Acid Gas Loading/Mole Amine 0.37321
MXSP-100
V-1203
LCV-1203
TO RR1 TEG
RR1 TEG
Std Vapor Volumetric Flow 240.44 MMBCFD
Temperature 127.7 °F
Pressure 939 psig
H2S(Mole Fraction) 0.0039675 ppm
CO2(Mole Fraction) 0.11168 ppm
TO RR2 TEG
RR2 TEG
Std Vapor Volumetric Flow 240.45 MMBCFD
Temperature 128.29 °F
Pressure 939 psig
H2S(Mole Fraction) 0.0041534 ppm
CO2(Mole Fraction) 0.15843 ppm
V-0701
VLVE-102
Std Liquid Volumetric Flow 1600 sgpm
Temperature 131.89 °F
Pressure 1040 psig
Total Acid Gas Loading/Mole Amine 0.0011187
CO2 Loading Mole/Mole Amine 0.0011061
H2S Loading Mole/Mole Amine 1.2653e-05
SPLT-101
P-2604/5/6
AC-2301 A/B
MKUP-1
RCYL-1
P-2600/2601
E-2201/2202
LCV-2401
T-2501
FAXR-100
V-2402
PCV-2402A
THERMAL OXIDIZER
E-2203
V-2401
Filtration

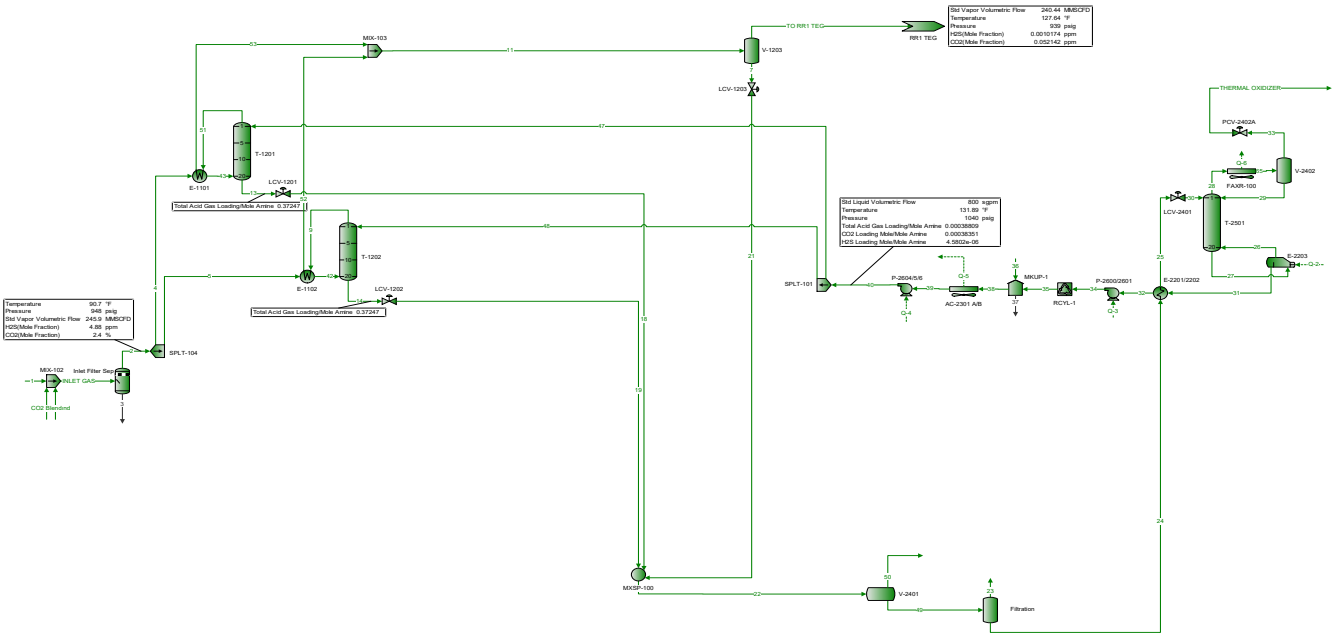
Std Vapor Volumetric Flow 240.44 MMSCFD
Temperature 127.64 °F
Pressure 939 psig
H2S(Mole Fraction) 0.0010174 ppm
CO2(Mole Fraction) 0.052142 ppm
TO RR1 TEG
RR1 TEG
MIX-103
V-1203
LCV-1203
THERMAL OXIDIZER
PCV-2402A
Q-6
FAXR-100
V-2402
T-1201
E-1101
LCV-1201
Total Acid Gas Loading/Mole Amine 0.37247
Std Liquid Volumetric Flow 800 sgpm
Temperature 131.89 °F
Pressure 1040 psig
Total Acid Gas Loading/Mole Amine 0.00038809
CO2 Loading Mole/Mole Amine 0.00038351
H2S Loading Mole/Mole Amine 4.5802e-06
LCV-2401
T-2501
T-1202
E-1102
LCV-1202
Total Acid Gas Loading/Mole Amine 0.37247
SPLT-101
P-2604/5/6
Q-5
AC-2301 A/B
MKUP-1
RCYL-1
P-2600/2601
Q-3
E-2201/2202
E-2303
Q-4
Temperature 90.7 °F
Pressure 945 psig
Std Vapor Volumetric Flow 245.9 MMSCFD
H2S(Mole Fraction) 4.88 ppm
CO2(Mole Fraction) 2.4 %
SPLT-104
MIX-102
Inlet Filter Sep
INLET GAS
CO2 Blendind
MIXSP-100
V-2401
Filtration

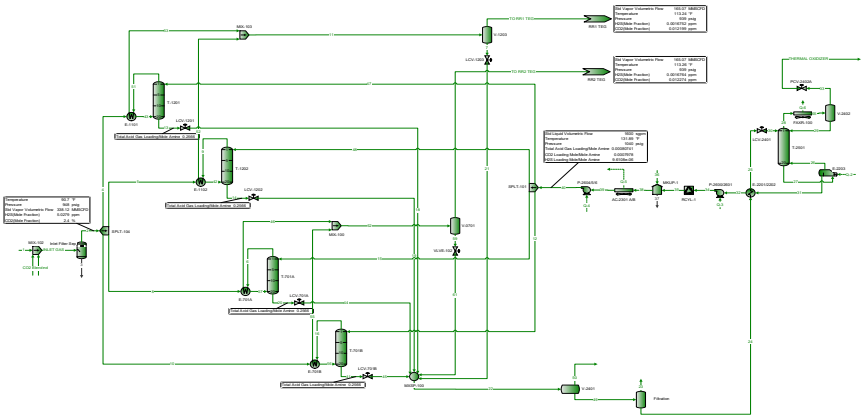
Temperature 55.7 F
Pressure 0.00 psig
Wet Vapor Volumetric Flow 208.12 MMSCFD
H2S(Mole Fraction) 0.0270 ppm
CO2(Mole Fraction) 2.4 %
SPLIT-100
MIX-100
Inlet Filter Separator
SPLIT-101
CO2 Vent
MIX-103
T-1203
LCV-1203
TO RRV TEG
MIX-T03
Wet Vapor Volumetric Flow 183.07 MMSCFD
Temperature 115.24 F
Pressure 0.00 psig
H2S(Mole Fraction) 0.0016752 ppm
CO2(Mole Fraction) 0.012199 ppm
TO RRG TEG
MIX-T02
Wet Vapor Volumetric Flow 183.07 MMSCFD
Temperature 115.24 F
Pressure 0.00 psig
H2S(Mole Fraction) 0.0016752 ppm
CO2(Mole Fraction) 0.012274 ppm
P-1201
LCV-1201
T-1201
Total Acid Gas Loading(Mole Acetar: 0.0000
P-1202
LCV-1202
T-1202
Total Acid Gas Loading(Mole Acetar: 0.0000
MIX-102
T-1701
VLVB-102
P-701A
LCV-701A
T-701A
Total Acid Gas Loading(Mole Acetar: 0.0000
P-701B
LCV-701B
T-701B
Total Acid Gas Loading(Mole Acetar: 0.0000
MIXER-100
Wet Liquid Volumetric Flow 5000 agpm
Temperature 131.00 F
Pressure 5040 psig
Total Acid Gas Loading(Mole Acetar: 0.0000
H2S Loading(Mole(Mole Acetar 0.00000
Acid Loading(Mole(Mole Acetar 0.01000
SPLIT-102
P-2004/05E
AC-2301 A/B
MIXER-1
RCYL-1
P-2006/2007
MIXER-102
LCV-2001
T-2001
P-2002
T-2002
THERMAL OXIDIZER
PCV-2402A
T-2402
T-2301
Filtration

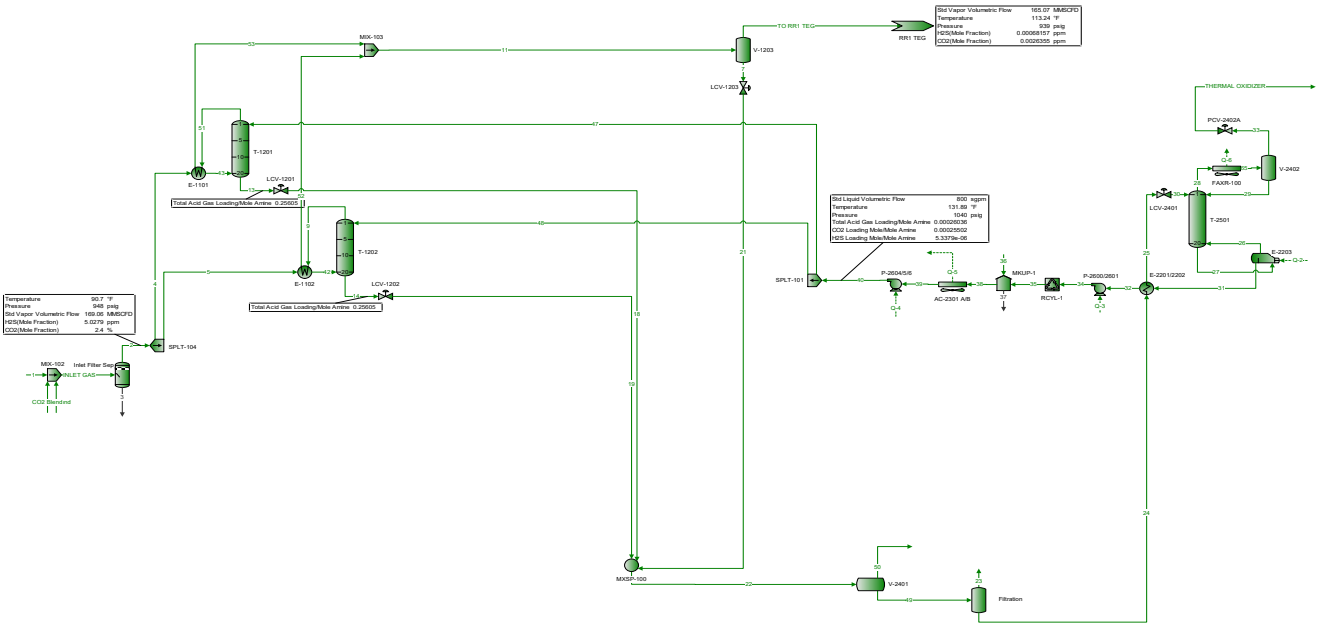
Std Vapor Volumetric Flow 165.07 MMSCFD
Temperature 113.24 °F
Pressure 939 psig
H2S(Mole Fraction) 0.00068157 ppm
CO2(Mole Fraction) 0.0026355 ppm
RR1 TEG
TO RR1 TEG
V-1203
LCV-1203
MIX-103
T-1201
E-1101
LCV-1201
Total Acid Gas Loading/Mole Amine 0.25605
T-1202
E-1102
LCV-1202
Total Acid Gas Loading/Mole Amine 0.25605
Temperature 90.7 °F
Pressure 948 psig
Std Vapor Volumetric Flow 169.06 MMSCFD
H2S(Mole Fraction) 5.0279 ppm
CO2(Mole Fraction) 2.4 %
SPLT-104
MIX-102
Inlet Filter Sep
INLET GAS
CO2 Blend\nd
Std Liquid Volumetric Flow 800 sgpm
Temperature 131.89 °F
Pressure 1040 psig
Total Acid Gas Loading/Mole Amine 0.000260536
CO2 Loading Mole/Mole Amine 0.000025502
H2S Loading Mole/Mole Amine 5.3379e-06
SPLT-101
P-2604/5/6
AC-2301 A/B
MKUP-1
RCYL-1
P-2600/2601
E-2201/2202
LCV-2401
T-2501
E-2203
THERMAL OXIDIZER
PCV-2402A
FAXR-100
V-2402
MIXSP-100
V-2401
Filtration

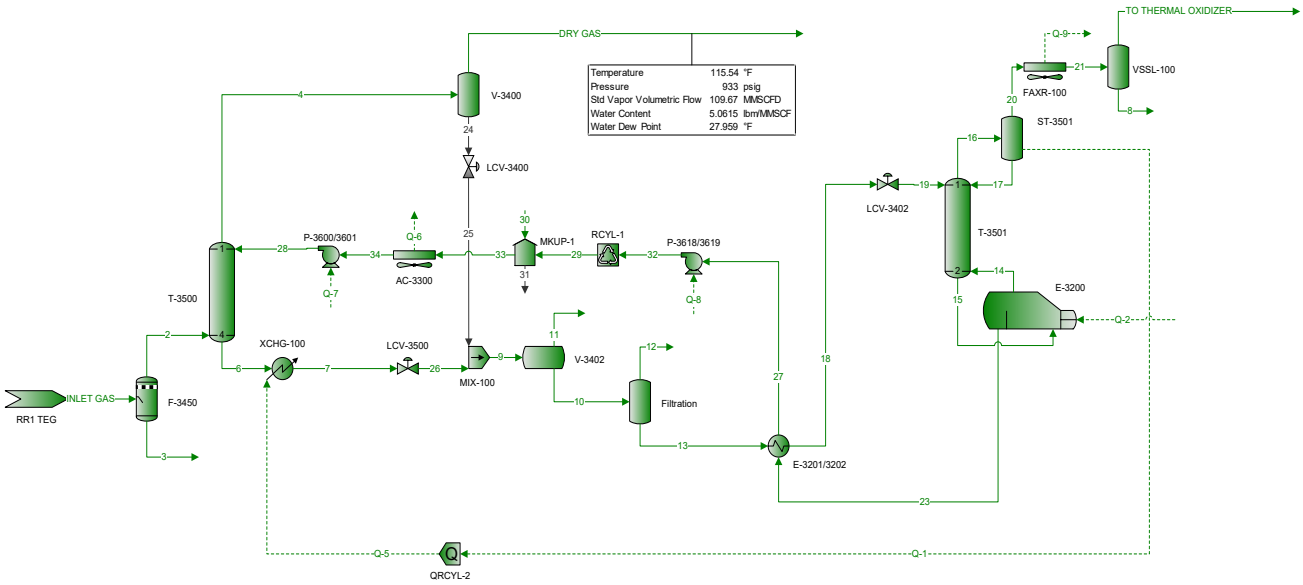
DRY GAS
TO THERMAL OXIDIZER
Temperature 115.54 °F
Pressure 933 psig
Std Vapor Volumetric Flow 109.67 MMSCFD
Water Content 5.0615 lbm/MMSCF
Water Dew Point 27.959 °F
V-3400
LCV-3400
P-3600/3601
Q-6
AC-3300
Q-7
MKUP-1
RCYL-1
P-3618/3619
Q-8
T-3500
XCHG-100
LCV-3500
MIX-100
V-3402
Filtration
E-3201/3202
LCV-3402
T-3501
E-3200
Q-2
Q-9
FAXR-100
VSSL-100
ST-3501
INLET GAS
RR1 TEG
F-3450
Q-5
QRCYL-2
Q-1

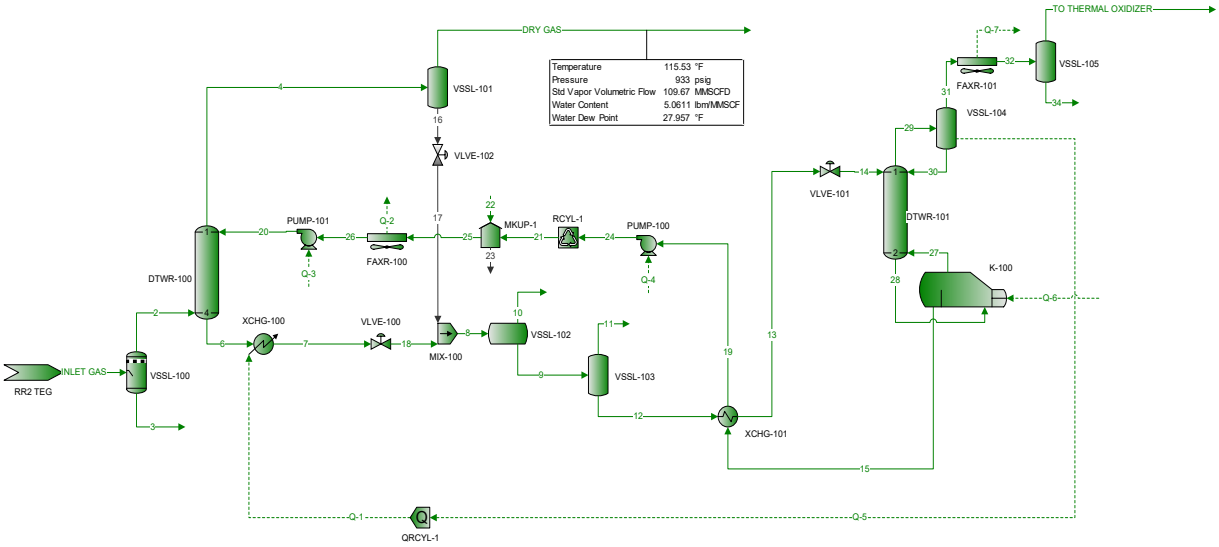
DRY GAS
TO THERMAL OXIDIZER
Temperature 115.53 °F
Pressure 933 psig
Std Vapor Volumetric Flow 109.67 MMSCFD
Water Content 5.0611 lbm/MMSCF
Water Dew Point 27.957 °F
VSSL-101
VLVE-102
VSSL-105
FAXR-101
VSSL-104
VLVE-101
DTWR-101
K-100
PUMP-101
FAXR-100
MKUP-1
RCYL-1
PUMP-100
DTWR-100
XCHG-100
VLVE-100
MIX-100
VSSL-102
VSSL-103
XCHG-101
INLET GAS
RR2 TEG
VSSL-100
QRCYL-1

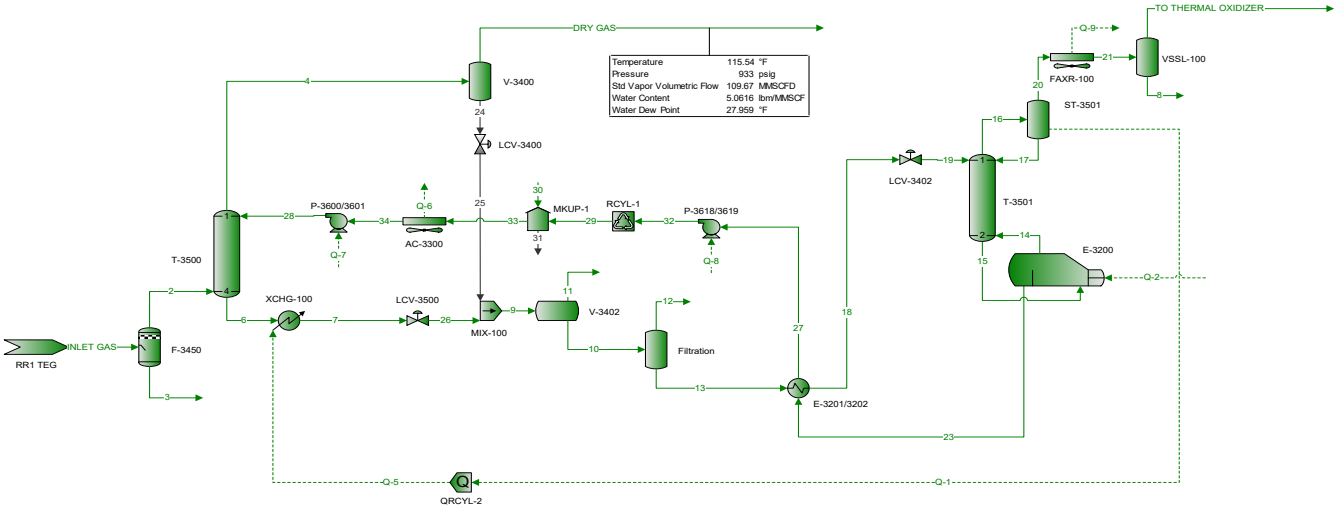
DRY GAS
TO THERMAL OXIDIZER
Temperature 115.54 °F
Pressure 933 psig
Std Vapor Volumetric Flow 109.67 MMSCFD
Water Content 5.0616 lbm/MMSCF
Water Dew Point 27.959 °F
V-3400
LCV-3400
P-3600/3601
Q-6
AC-3300
Q-7
MKUP-1
RCYL-1
P-3618/3619
Q-8
T-3500
XCHG-100
LCV-3500
MIX-100
V-3402
Filtration
E-3201/3202
LCV-3402
T-3501
ST-3501
FAXR-100
Q-9
VSSL-100
E-3200
Q-2
INLET GAS
RR1 TEG
F-3450
QRCYL-2
Q-5
Q-1

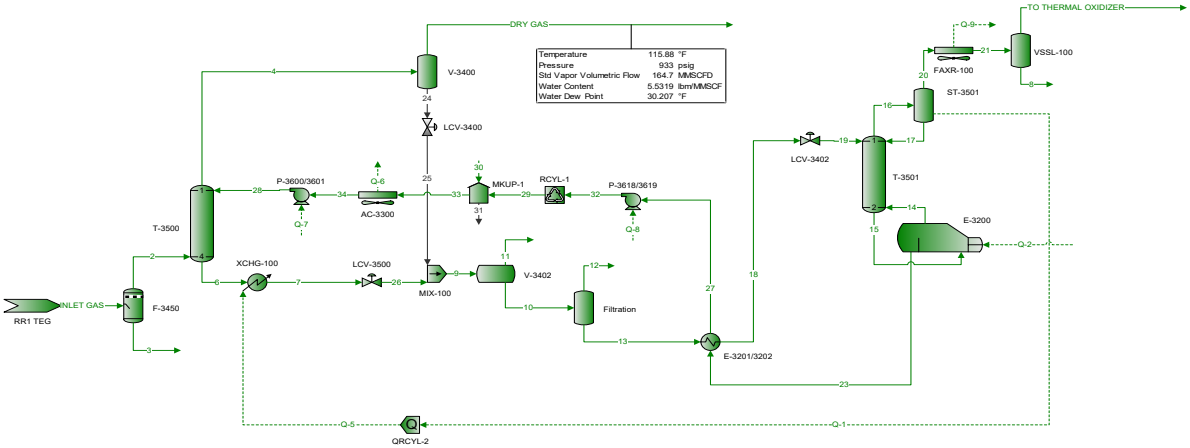
DRY GAS
TO THERMAL OXIDIZER
Temperature 115.88 °F
Pressure 933 psig
Std Vapor Volumetric Flow 164.7 MMSCFD
Water Content 5.5319 lbm/MMSCF
Water Dew Point 30.207 °F
V-3400
LCV-3400
P-3600/3601
AC-3300
MKUP-1
RCYL-1
P-3618/3619
LCV-3402
T-3501
ST-3501
FAXR-100
VSSL-100
E-3200
T-3500
XCHG-100
LCV-3500
MIX-100
V-3402
Filtration
E-3201/3202
INLET GAS
RR1 TEG
F-3450
QRCYL-2

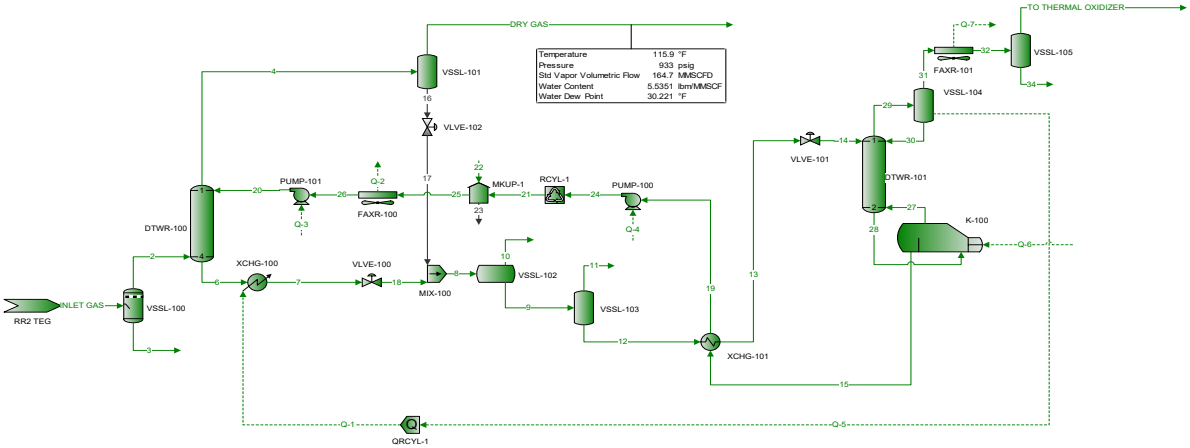
DRY GAS
TO THERMAL OXIDIZER
Temperature 115.9 °F
Pressure 933 psig
Std Vapor Volumetric Flow 164.7 MMSCFD
Water Content 5.5351 lbm/MMSCF
Water Dew Point 30.221 °F
VSSL-101
VLVE-102
VSSL-105
FAXR-101
VSSL-104
VLVE-101
DTWR-101
K-100
PUMP-101
FAXR-100
MKUP-1
RCYL-1
PUMP-100
DTWR-100
XCHG-100
VLVE-100
MIX-100
VSSL-102
VSSL-103
XCHG-101
INLET GAS
RR2 TEG
VSSL-100
QRCYL-1

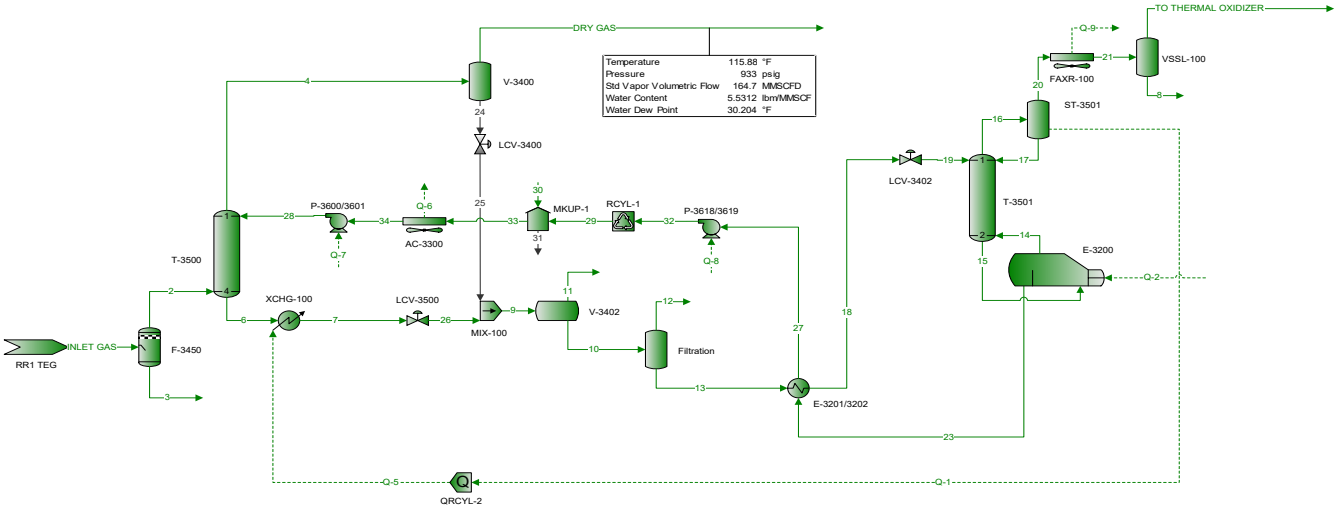
DRY GAS
TO THERMAL OXIDIZER
Temperature 115.88 °F
Pressure 933 psig
Std Vapor Volumetric Flow 164.7 MMSCFD
Water Content 5.5312 lbm/MMSCF
Water Dew Point 30.204 °F
V-3400
LCV-3400
FAXR-100
VSSL-100
ST-3501
LCV-3402
T-3501
E-3200
T-3500
P-3600/3601
AC-3300
MKUP-1
RCYL-1
P-3618/3619
XCHG-100
LCV-3500
MIX-100
V-3402
Filtration
E-3201/3202
INLET GAS
RR1 TEG
F-3450
QRCYL-2
Q-1
Q-2
Q-5
Q-6
Q-7
Q-8
Q-9

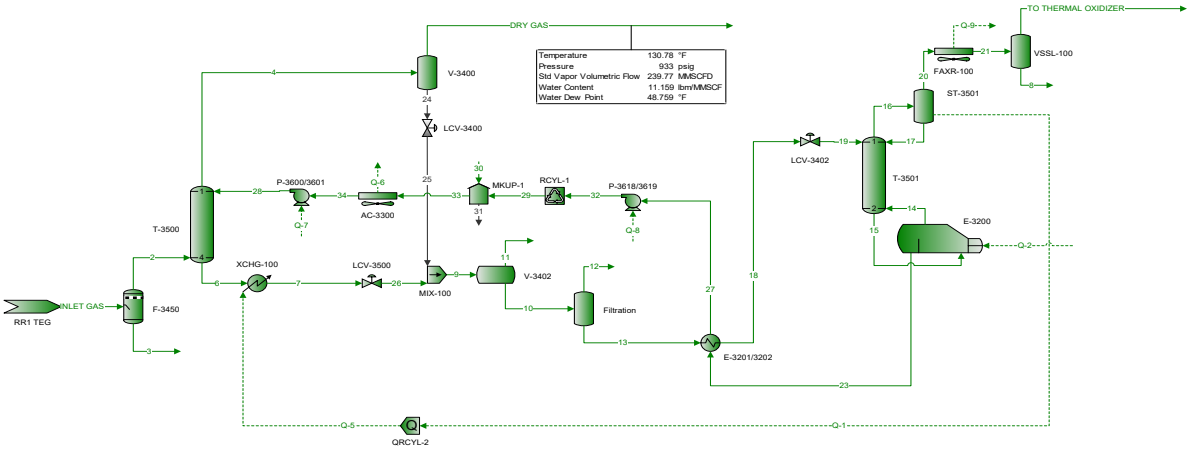
DRY GAS
TO THERMAL OXIDIZER
Temperature 130.78 °F
Pressure 933 psig
Std Vapor Volumetric Flow 239.77 MMSCFD
Water Content 11.159 lbm/MMSCF
Water Dew Point 48.759 °F
V-3400
LCV-3400
P-3600/3601
AC-3300
MKUP-1
RCYL-1
P-3618/3619
LCV-3402
T-3501
ST-3501
FAXR-100
VSSL-100
E-3200
T-3500
XCHG-100
LCV-3500
MIX-100
V-3402
Filtration
E-3201/3202
INLET GAS
RR1 TEG
F-3450
QRCYL-2

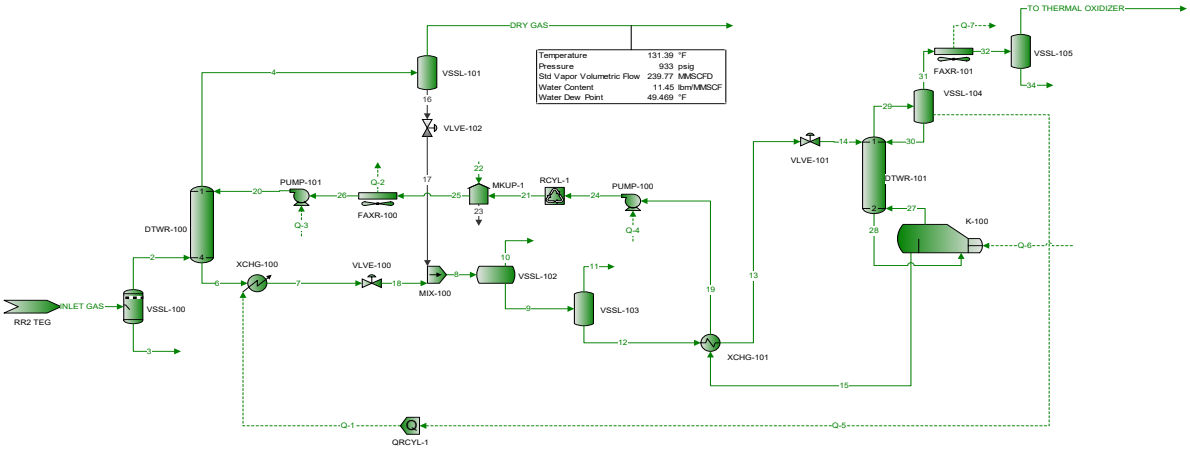
DRY GAS
TO THERMAL OXIDIZER
Temperature 131.39 °F
Pressure 933 psig
Std Vapor Volumetric Flow 239.77 MMSCFD
Water Content 11.45 lbm/MMSCF
Water Dew Point 49.469 °F
VSSL-101
VLVE-102
PUMP-101
Q-2
FAXR-100
MKUP-1
RCYL-1
PUMP-100
Q-3
Q-4
DTWR-100
XCHG-100
VLVE-100
MIX-100
VSSL-102
VSSL-103
XCHG-101
VLVE-101
DTWR-101
K-100
Q-6
Q-7
FAXR-101
VSSL-105
VSSL-104
INLET GAS
RR2 TEG
VSSL-100
Q-1
QRCYL-1
Q-5

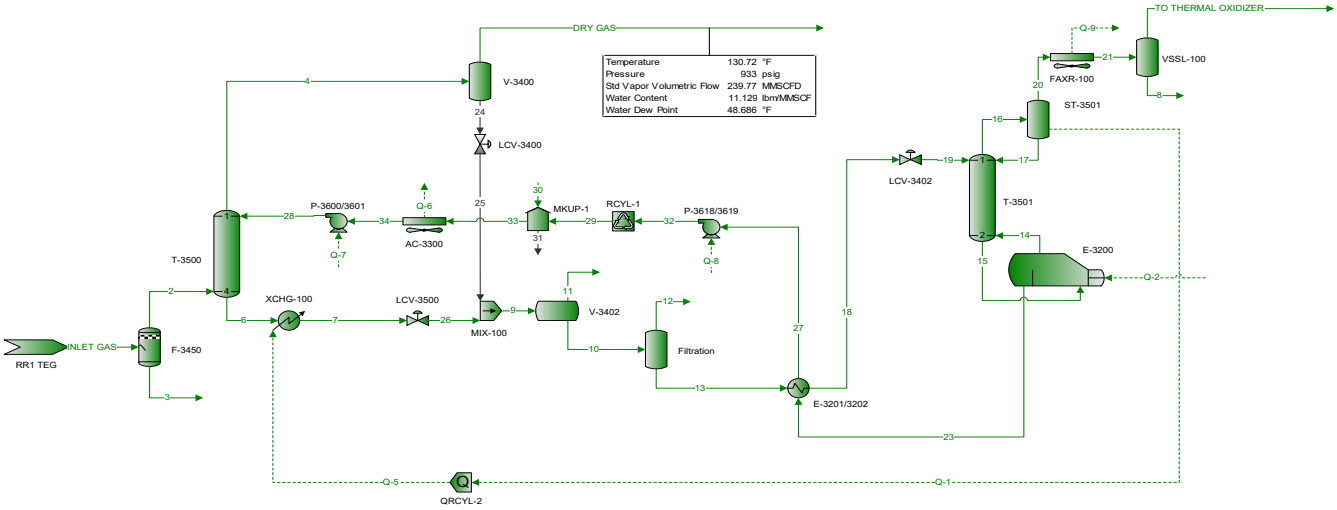
DRY GAS
TO THERMAL OXIDIZER
Temperature 130.72 °F
Pressure 933 psig
Std Vapor Volumetric Flow 239.77 MMSCFD
Water Content 11.129 lbm/MMSCF
Water Dew Point 48.686 °F
V-3400
LCV-3400
FAXR-100
VSSL-100
ST-3501
LCV-3402
T-3501
E-3200
T-3500
P-3600/3601
AC-3300
MKUP-1
RCYL-1
P-3618/3619
XCHG-100
LCV-3500
MIX-100
V-3402
Filtration
E-3201/3202
INLET GAS
RR1 TEG
F-3450
QRCYL-2

# Targa Midstream Services LLC
# Road Runner Gas Plant
# Hourly Crude Working/Breathing/Flash

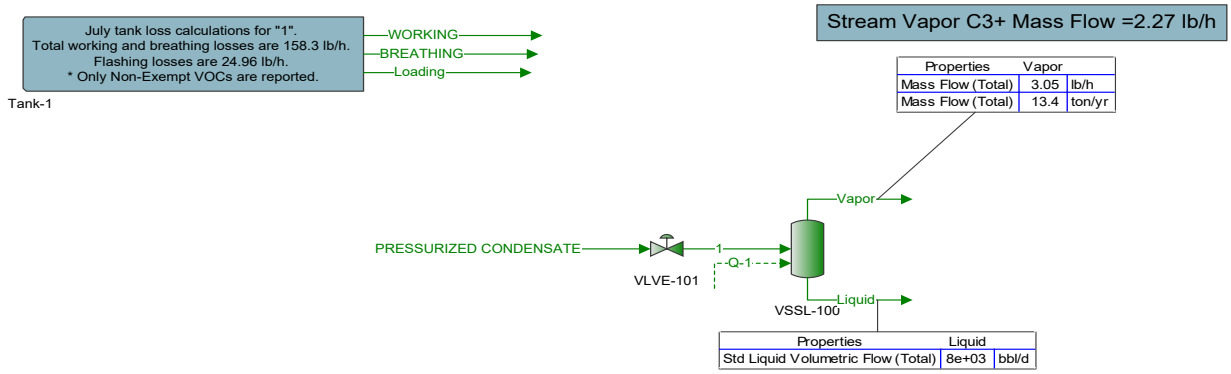


| Names | Units | PRESSURIZED CONDENSATE | Liquid | Vapor |
|---|---|---|---|---|
| Temperature | °F | 120* | 95 | 95* |
| Pressure | psia | 14.7* | 14.7 | 14.7 |
| Mass Fraction Vapor | % | 0.19202 | 0 | 100 |
| Molecular Weight | lb/lbmol | 88.602 | 88.604 | 52.438 |
| Vapor Volumetric Flow | ft^3/h | 2885.6 | 1913.6 | 23.24 |
| Liquid Volumetric Flow | gpm | 359.76 | 238.58 | 2.8975 |

# Road Runner
# Annual Crude Working/Breathing/Flash

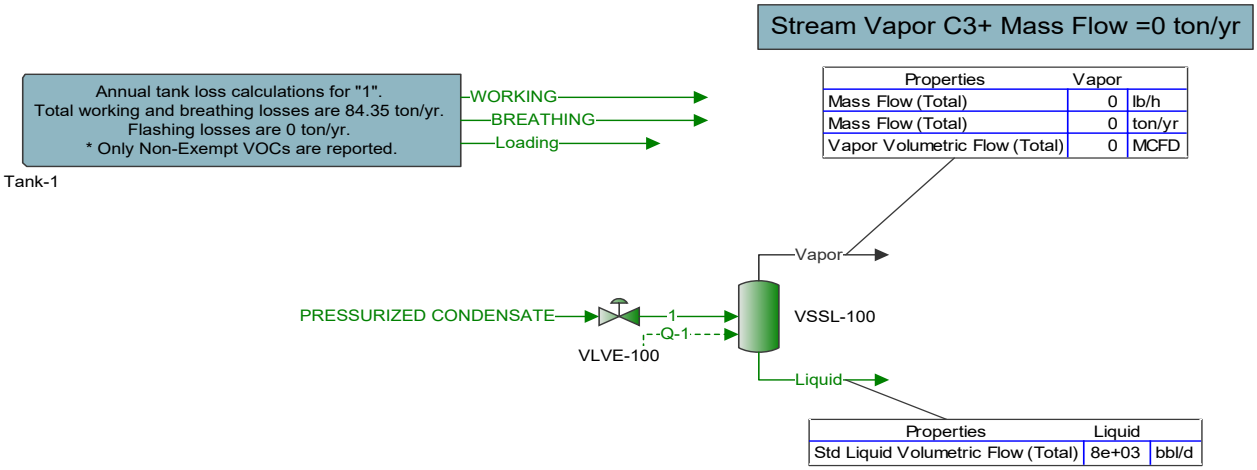


| Names | Units | Liquid | Vapor |
|---|---|---|---|
| Temperature | °F | 63.2 | 63.2* |
| Pressure | psig | 0.0040512 | 0.0040512 |
| Mass Fraction Vapor | % | 0 | |
| Molecular Weight | lb/lbmol | 88.602 | |
| Vapor Volumetric Flow | ft^3/h | 1867.5 | 0 |
| Liquid Volumetric Flow | gpm | 232.83 | 0 |

# Road Runner
# Hourly PW Working/Breathing/Flash

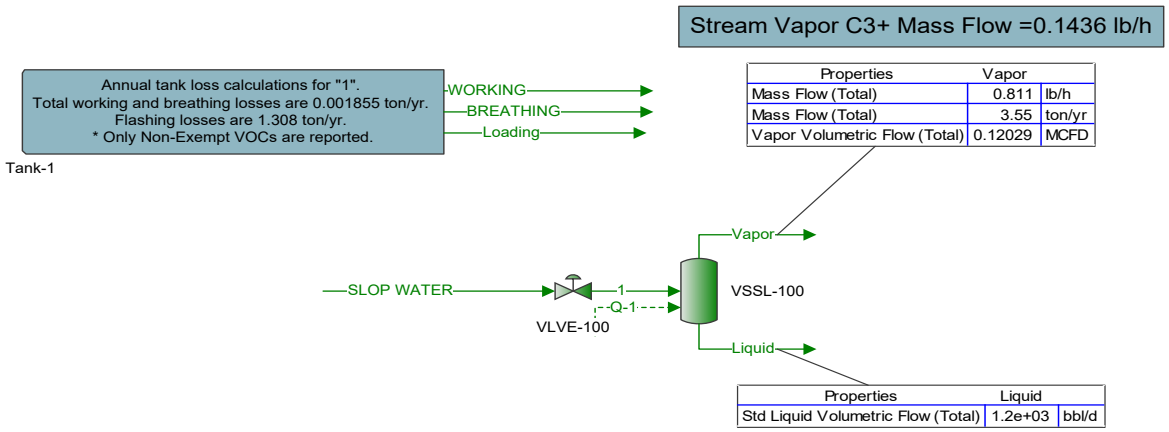


| Properties | Vapor | |
|---|---|---|
| Mass Flow (Total) | 0.811 | lb/h |
| Mass Flow (Total) | 3.55 | ton/yr |
| Vapor Volumetric Flow (Total) | 0.12029 | MCFD |

| Properties | Liquid | |
|---|---|---|
| Std Liquid Volumetric Flow (Total) | 1.2e+03 | bbl/d |

| Names | Units | Liquid | Vapor |
|---|---|---|---|
| Temperature | °F | 95 | 95* |
| Pressure | psig | 20.223 | 20.223 |
| Mass Fraction Vapor | % | 0 | 100 |
| Molecular Weight | lb/lbmol | 18.02 | 27.302 |
| Vapor Volumetric Flow | ft^3/h | 282.26 | 5.0121 |
| Liquid Volumetric Flow | gpm | 35.191 | 0.62488 |

# Section 8

## Map(s)

---

**A map** such as a 7.5 minute topographic quadrangle showing the exact location of the source. The map shall also include the following:

| | |
|---|---|
| The UTM or Longitudinal coordinate system on both axes | An indicator showing which direction is north |
| A minimum radius around the plant of 0.8km (0.5 miles) | Access and haul roads |
| Topographic features of the area | Facility property boundaries |
| The name of the map | The area which will be restricted to public access |
| A graphical scale | |

---

A topographical map is attached. Access and haul roads are indicated in green, the facility property boundary is indicated in blue, and the area which will be restricted to public access is indicated in red.

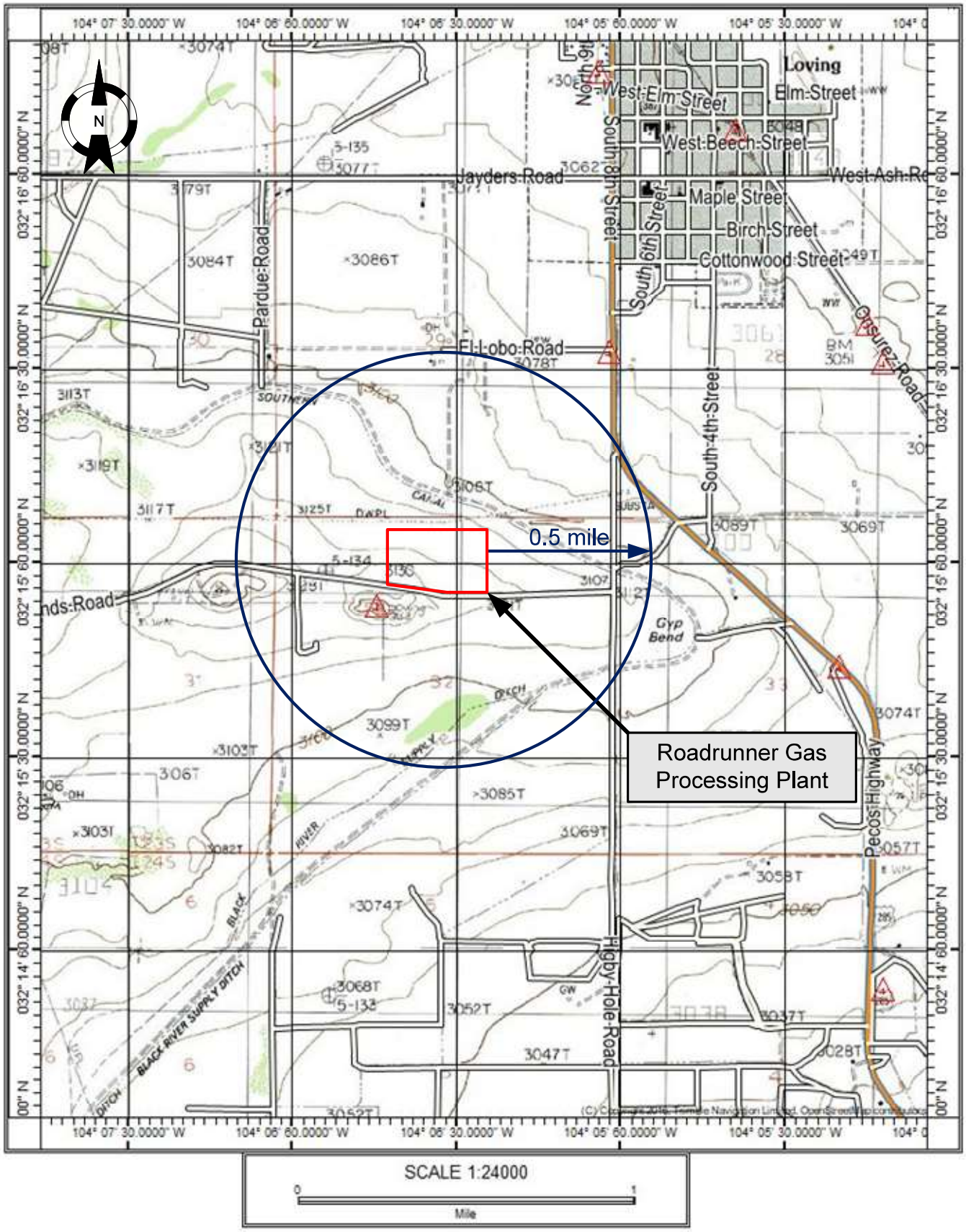


| Trinity Consultants | Area Map | Targa Northern Delaware, LLC | | |
|---|---|---|---|---|
| Scale: 1:24,000 | Drawn by: | Date: 4/8/2020 | Chk'd by: | Date: |
| **Roadrunner Gas Processing Plant**<br>N 32° 15' 56.71" Latitude<br>W 104° 6' 29.97" Longitude | Project No.: | File Name: **Roadrunner Figures** | Figure: Section 8 | |

# Section 9

## Proof of Public Notice

(for NSR applications submitting under 20.2.72 or 20.2.74 NMAC)

(This proof is required by: 20.2.72.203.A.14 NMAC "Documentary Proof of applicant's public notice")

---

☑ **I have read the AQB "Guidelines for Public Notification for Air Quality Permit Applications"**
This document provides detailed instructions about public notice requirements for various permitting actions. It also provides public notice examples and certification forms. Material mistakes in the public notice will require a re-notice before issuance of the permit.

---

Unless otherwise allowed elsewhere in this document, the following items document proof of the applicant's Public Notification. Please include this page in your proof of public notice submittal with checkmarks indicating which documents are being submitted with the application.

**New Permit** and **Significant Permit Revision** public notices must include all items in this list.

**Technical Revision** public notices require only items 1, 5, 9, and 10.

Per the Guidelines for Public Notification document mentioned above, include:

1. ☐ A copy of the certified letter receipts with post marks (20.2.72.203.B NMAC)
2. ☐ A list of the places where the public notice has been posted in at least four publicly accessible and conspicuous places, including the proposed or existing facility entrance. (e.g: post office, library, grocery, etc.)
3. ☐ A copy of the property tax record (20.2.72.203.B NMAC).
4. ☐ A sample of the letters sent to the owners of record.
5. ☐ A sample of the letters sent to counties, municipalities, and Indian tribes.
6. ☐ A sample of the public notice posted and a verification of the local postings.
7. ☐ A table of the noticed citizens, counties, municipalities and tribes and to whom the notices were sent in each group.
8. ☐ A copy of the public service announcement (PSA) sent to a local radio station and documentary proof of submittal.
9. ☐ A copy of the classified or legal ad including the page header (date and newspaper title) or its affidavit of publication stating the ad date, and a copy of the ad. When appropriate, this ad shall be printed in both English and Spanish.
10. ☐ A copy of the display ad including the page header (date and newspaper title) or its affidavit of publication stating the ad date, and a copy of the ad. When appropriate, this ad shall be printed in both English and Spanish.
11. ☐ A map with a graphic scale showing the facility boundary and the surrounding area in which owners of record were notified by mail. This is necessary for verification that the correct facility boundary was used in determining distance for notifying land owners of record.

---

N/A – This is a Title V application submitted pursuant to 20.2.70 NMAC.

# Section 10

## Written Description of the Routine Operations of the Facility

---

**A written description of the routine operations of the facility**. Include a description of how each piece of equipment will be operated, how controls will be used, and the fate of both the products and waste generated. For modifications and/or revisions, explain how the changes will affect the existing process. In a separate paragraph describe the major process bottlenecks that limit production. The purpose of this description is to provide sufficient information about plant operations for the permit writer to determine appropriate emission sources.

---

The Roadunner Gas Processing Plant is a natural gas processing plant located in Eddy County near Loving, NM. The primary function of the plant is to separate natural gas (methane) from heavier (liquid) hydrocarbons, raw sweet field gas so that the gas can meet pipeline specifications. The plant has been designated a primary Standard Industrial Classification (SIC) Code of 1311.

The operation of the Roadrunner Gas Processing Plant is intended to process 735 MMscfd of gas. The gas will be treated to remove $CO_2$ and $H_2S$, dehydrated to remove water, and processed to remove heavy (liquid) hydrocarbons from the gas stream. Several plant systems will be involved to perform these functions.

**Slug Catcher / Separator**

A large slug catcher has been placed at the front of the plant to catch and separate any free hydrocarbon liquids and water present in the inlet pipeline gas stream. It is capable of handling large slugs of liquid brought into the plant from pipeline pigging operations. The equipment also serves as a three-phase separator to separate the free hydrocarbons, gas to be processed, and any water that may have condensed out in the pipeline after field dehydration.

**Stabilizers**

The overhead stabilization system is in place to lower the Reid Vapor Pressure (RVP) of the pipeline liquids and condensate after they are dropped out of the gas stream. Through a process that heats the condensate to flash off lighter hydrocarbons so the RVP is lowered to 9. The liquids out of the slug catcher are stabilized and sent to the tank farm for truck sales. Any remaining vapors are recycled back to the front of the Slug Catcher. The liquid in the tank farm is then stable and thus does not give off significant flashing vapors. Significant working and standing losses will occur at the tank farm. These emissions will be controlled with a vapor combustor.

**Amine Treating**

The amine units are designed to remove $CO_2$ and $H_2S$ (from the natural gas stream) to meet pipeline specifications. Streams containing up to 5 ppm H2S will be processed at the plant. Amine treating is an exothermic chemical reaction process. The treating solution is a mixture of 50% RO water, 40% methyl-diethanolamine (MDEA) and 10% Piperazine. This aqueous mixture is regenerated and reused. Lean MDEA solution is pumped to the top of the contactor and allowed to flow downward. Wet gas is fed into the bottom of the contactor and flows upward.

As the lean MDEA solution flows down through the contactor, it comes into contact with the wet gas. The $CO_2$ and $H_2S$ are absorbed by amine. The amine is now known as rich amine and the remaining gas is sweet and continues to the dehydration systems.

The regeneration of the amine utilizes one 70.28 MMBtu/hr heater (EP-3A) and one 84.77 MMBtu/hr heater (EP-3B). Significant amounts of VOC and HAP can be generated in this process. The acid gas is sent to a thermal oxidizer where additional combustion will further minimize VOC and H2S emissions.

**Glycol Dehydration**

Triethylene glycol (TEG) is used to remove water from the natural gas stream. Water is saturated into the sweet gas stream during the Amine Treating process. This water is absorbed by the TEG solution. The wet gas is brought into contact with dry glycol in an absorber. Water vapor is absorbed in the glycol and consequently, the water content is reduced. The wet rich glycol then flows from the absorber to a regeneration system in which the entrained gas is separated and fractionated in a column and re-boiler. The heating allows boiling off the absorbed water vapor and the water dry lean glycol is cooled (via heat exchange) and pumped back to the absorber.

The regeneration of the TEG utilizes small (less than 10 MMBtu/hr) heaters. This process produces VOC and HAP emission. This stream is condensed. The wastewater stream is sent to a wastewater tank. The non-condensable stream is sent to the thermal oxidizer for control where further combustion reduces the emissions. The dehydration flash gas stream is used as plant fuel.

**Molecular Sieve Dehydration**

Molecular sieve dehydration is used upstream of the cryogenic processes to achieve a -160°F water dew point. The process uses three molecular sieve vessels with two vessels in service adsorbing moisture from the gas stream and the other vessel in the regeneration mode.

During the regeneration mode, hot, dry gas (regen gas) is passed up through the vessel to drive off the adsorbed moisture from the molecular sieve. The gas comes from the discharge of the residue compressors and it is passed through a heat exchanger and a heater to achieve a temperature of approximately 500°F. After the gas passes through the bed it is cooled in an air cooled exchanger. The water in the gas condenses and is separated from the gas stream in a separator. The regen gas is routed to the inlet of the cryogenic unit.

**Cryogenic Unit (3)**

The cryogenic units are designed to liquefy natural gas components from the sweet, dehydrated inlet gas by removing work from the gas be means of the turbo expander/compressor. The cryogenic unit recovers natural gas liquids (NGL) by cooling the gas stream to extremely cold temperatures (-160°F and lower) and condensing components such as ethane, propane, butanes and heavier. The gas is cooled by a series of heat exchangers and by lowering the pressure of the gas from around 950 PSIG to approximately 190 PSIG. Once the gas has passed through the system of heat exchangers and expansion it is re-compressed using the energy obtained from expanding the gas.

The gas will flow through the following heat exchangers:

- **Gas to Gas Exchanger –** This unit exchanges heat from the warm inlet gas and the cold residue gas that has already been expanded. This cools the inlet gas.
- **Product Heater –** This unit will cool the inlet gas by exchanging heat with the cold liquid product that has been recovered.
- **Side-Reboiler –** This unit uses heat from the inlet gas to boil the methane out of the liquid. One stream comes off the side of the tower and one stream comes off of the bottom of the tower. This also cools the inlet gas.

The gas is expanded and recompressed in the expander/compressor.

**Emergency Flares**

Three flares are proposed. These flares' header system gathers hydrocarbons from Pressure Safety Devices in the plant, and routes them to the flares. These systems are also used to safely control blow-down hydrocarbons from equipment in the plant.

**Compressors**

The site will operate a total of 23 electric-driven compressors. No internal combustion engines or turbines will be used to drive compressors.

# Section 11

## Source Determination

Source submitting under 20.2.70, 20.2.72, 20.2.73, and 20.2.74 NMAC

Sources applying for a construction permit, PSD permit, or operating permit shall evaluate surrounding and/or associated sources (including those sources directly connected to this source for business reasons) and complete this section. Responses to the following questions shall be consistent with the Air Quality Bureau's permitting guidance, Single Source Determination Guidance, which may be found on the Applications Page in the Permitting Section of the Air Quality Bureau website.

Typically, buildings, structures, installations, or facilities that have the same SIC code, that are under common ownership or control, and that are contiguous or adjacent constitute a single stationary source for 20.2.70, 20.2.72, 20.2.73, and 20.2.74 NMAC applicability purposes. Submission of your analysis of these factors in support of the responses below is optional, unless requested by NMED.

**A. Identify the emission sources evaluated in this section** (list and describe)**:**

**B. Apply the 3 criteria for determining a single source:**

**SIC Code:** Surrounding or associated sources belong to the same 2-digit industrial grouping (2-digit SIC code) as this facility, OR surrounding or associated sources that belong to different 2-digit SIC codes are support facilities for this source.

☑ **Yes** ☐ **No**

**Common Ownership or Control:** Surrounding or associated sources are under common ownership or control as this source.

☑ **Yes** ☐ **No**

**Contiguous or Adjacent:** Surrounding or associated sources are contiguous or adjacent with this source.

☑ **Yes** ☐ **No**

**C. Make a determination:**

☑ The source, as described in this application, constitutes the entire source for 20.2.70, 20.2.72, 20.2.73, or 20.2.74 NMAC applicability purposes. If in "A" above you evaluated only the source that is the subject of this application, all "**YES**" boxes should be checked. If in "A" above you evaluated other sources as well, you must check **AT LEAST ONE** of the boxes "**NO**" to conclude that the source, as described in the application, is the entire source for 20.2.70, 20.2.72, 20.2.73, and 20.2.74 NMAC applicability purposes.

☐ The source, as described in this application, **does not** constitute the entire source for 20.2.70, 20.2.72, 20.2.73, or 20.2.74 NMAC applicability purposes (A permit may be issued for a portion of a source). The entire source consists of the following facilities or emissions sources (list and describe):

# Section 12

## Section 12.A

## PSD Applicability Determination for All Sources

(Submitting under 20.2.72, 20.2.74 NMAC)

---

**A PSD applicability determination for all sources**. For sources applying for a significant permit revision, apply the applicable requirements of 20.2.74.AG and 20.2.74.200 NMAC and to determine whether this facility is a major or minor PSD source, and whether this modification is a major or a minor PSD modification. It may be helpful to refer to the procedures for Determining the Net Emissions Change at a Source as specified by Table A-5 (Page A.45) of the EPA New Source Review Workshop Manual to determine if the revision is subject to PSD review.

A. This facility is:

- ☐ **a minor PSD source before and after this modification (if so, delete C and D below).**
- ☐ **a major PSD source before this modification. This modification will make this a PSD minor source.**
- ☐ **an existing PSD Major Source that has never had a major modification requiring a BACT analysis.**
- ☐ **an existing PSD Major Source that has had a major modification requiring a BACT analysis**
- ☐ **a new PSD Major Source after this modification.**

---

N/A – This application is for an initial Title V, submitted pursuant to 20.2.70 NMAC.

# Section 13

## Determination of State & Federal Air Quality Regulations

**This section lists each state and federal air quality regulation that may apply to your facility and/or equipment that are stationary sources of regulated air pollutants.**

Not all state and federal air quality regulations are included in this list. Go to the Code of Federal Regulations (CFR) or to the Air Quality Bureau's regulation page to see the full set of air quality regulations.

**Required Information for Specific Equipment:**
For regulations that apply to specific source types, in the 'Justification' column **provide any information needed to determine if the regulation does or does not apply**. **For example**, to determine if emissions standards at 40 CFR 60, Subpart IIII apply to your three identical stationary engines, we need to know the construction date as defined in that regulation; the manufacturer date; the date of reconstruction or modification, if any; if they are or are not fire pump engines; if they are or are not emergency engines as defined in that regulation; their site ratings; and the cylinder displacement.

**Required Information for Regulations that Apply to the Entire Facility:**
See instructions in the 'Justification' column for the information that is needed to determine if an 'Entire Facility' type of regulation applies (e.g. 20.2.70 or 20.2.73 NMAC).

**Regulatory Citations for Regulations That Do Not, but Could Apply:**
If there is a state or federal air quality regulation that does not apply, but you have a piece of equipment in a source category for which a regulation has been promulgated, you must **provide the low level regulatory citation showing why your piece of equipment is not subject to or exempt from the regulation. For example** if you have a stationary internal combustion engine that is not subject to 40 CFR 63, Subpart ZZZZ because it is an existing 2 stroke lean burn stationary RICE with a site rating of more than 500 brake HP located at a major source of HAP emissions, your citation would be 40 CFR 63.6590(b)(3)(i). **We don't want a discussion of every non-applicable regulation, but if it is possible a regulation could apply, explain why it does not. For example,** if your facility is a power plant, you do not need to include a citation to show that 40 CFR 60, Subpart OOO does not apply to your non-existent rock crusher.

**Regulatory Citations for Emission Standards:**
**For each unit that is subject to an emission standard in a source specific regulation, such as 40 CFR 60, Subpart OOO or 40 CFR 63, Subpart HH, include the low level regulatory citation of that emission standard.** Emission standards can be numerical emission limits, work practice standards, or other requirements such as maintenance. **Here are examples:** a glycol dehydrator is subject to the general standards at 63.764C(1)(i) through (iii); an engine is subject to 63.6601, Tables 2a and 2b; a crusher is subject to 60.672(b), Table 3 and all transfer points are subject to 60.672(e)(1)

**Federally Enforceable Conditions:**
All federal regulations are federally enforceable. All Air Quality Bureau State regulations are federally enforceable except for the following: affirmative defense portions at 20.2.7.6.B, 20.2.7.110(B)(15), 20.2.7.11 through 20.2.7.113, 20.2.7.115, and 20.2.7.116; 20.2.37; 20.2.42; 20.2.43; 20.2.62; 20.2.63; 20.2.86; 20.2.89; and 20.2.90 NMAC. Federally enforceable means that EPA can enforce the regulation as well as the Air Quality Bureau and federally enforceable regulations can count toward determining a facility's potential to emit (PTE) for the Title V, PSD, and nonattainment permit regulations.

INCLUDE ANY OTHER INFORMATION NEEDED TO COMPLETE AN APPLICABILITY DETERMINATION OR THAT IS RELEVENT TO YOUR FACILITY'S NOTICE OF INTENT OR PERMIT.

**EPA Applicability Determination Index for 40 CFR 60, 61, 63, etc**: http://cfpub.epa.gov/adi/

---

To save paper and to standardize the application format, delete this sentence, and begin your submittal for this attachment on this page.

## Table for State Regulations:

| State Regulation Citation | Title | Applies? Enter Yes or No | Unit(s) or Facility | Justification: (You may delete instructions or statements that do not apply in the justification column to shorten the document.) |
|---|---|---|---|---|
| 20.2.1 NMAC | General Provisions | Yes | Facility | General Provisions apply to Notice of Intent, Construction, and Title V permit applications. |
| 20.2.3 NMAC | Ambient Air Quality Standards NMAAQS | Yes | Facility | 20.2.3 NMAC is a SIP approved regulation that limits the maximum allowable concentration of Total Suspended Particulates, Sulfur Compounds, Carbon Monoxide and Nitrogen Dioxide. The facility meets maximum allowable concentrations of the TSP, $SO_2$, $H_2S$, $NO_x$, and CO under this regulation. |
| 20.2.7 NMAC | Excess Emissions | Yes | Facility | This regulation establishes requirements for the facility if operations at the facility result in any excess emissions. The owner or operator will operate the source at the facility having an excess emission, to the extent practicable, including associated air pollution control equipment, in a manner consistent with good air pollution control practices for minimizing emissions. The facility will also notify the NMED of any excess emission per 20.2.7.110 NMAC. |
| 20.2.23 NMAC | Fugitive Dust Control | No | N/A | This regulation does not apply because this application is not for a Notice of Intent. |
| 20.2.33 NMAC | Gas Burning Equipment - Nitrogen Dioxide | No | N/A | This facility does not have existing gas burning equipment having a heat input of greater than 1,000,000 million British Thermal Units per year per unit. |
| 20.2.34 NMAC | Oil Burning Equipment: $NO_2$ | No | N/A | This facility does not have oil burning equipment having a heat input of greater than 1,000,000 million British Thermal Units per year per unit. |
| 20.2.35 NMAC | Natural Gas Processing Plant – Sulfur | Yes | Facility | This regulation establishes sulfur emission standards for natural gas processing plants. The proposed facility meets the definition of a new natural gas processing plant under this regulation and is subject to the requirements of this regulation [20.2.35.7 (B) NMAC]. The facility will comply with all requirements under 20.2.35 NMAC as applicable. |
| 20.2.37 and 20.2.36 NMAC | Petroleum Processing Facilities and Petroleum Refineries | N/A | N/A | **These regulations were repealed by the Environmental Improvement Board. If you had equipment subject to 20.2.37 NMAC before the repeal, your combustion emission sources are now subject to 20.2.61 NMAC.** |
| 20.2.38 NMAC | Hydrocarbon Storage Facility | No | N/A | This facility does not have any containers with a capacity of 20,000 gallons or a throughput of 30,000 gallons/week. |
| 20.2.39 NMAC | Sulfur Recovery Plant - Sulfur | No | N/A | This facility is not a sulfur recovery plant; therefore, this regulation does not apply. |
| 20.2.50 NMAC | Oil and Gas Sector – Ozone Precursor Pollutants | Yes | Check the box for the subparts that are applicable:<br>☐ 113 – Engines and Turbines<br>☒ 114 – Compressor Seals<br>☐ 115 – Control Devices and Closed Vent Systems<br>☒ 116 – Equipment Leaks and Fugitive Emissions<br>☐ 117 – Natural Gas Well Liquid Unloading<br>☐ 118 – Glycol Dehydrators | 113 – N/A—There are no natural gas fired engines > 500 hp at the site; therefore, this requirement does not apply.<br><br>114 – The reciprocating compressors associated with the electric driven engines at this facility are subject to this subpart. Targa will comply with the applicable requirements of this subpart.<br><br>115 – N/A—There are no control devices used to comply with 20.2.50 NMAC; therefore, this requirement does not apply. |

| State Regulation Citation | Title | Applies? Enter Yes or No | Unit(s) or Facility | Justification: (You may delete instructions or statements that do not apply in the justification column to shorten the document.) |
|---|---|---|---|---|
| | | | ☒ 119 – Heaters<br>☐ 120 – Hydrocarbon Liquid Transfers<br>☒ 121 – Pig Launching and Receiving<br>☐ 122 – Pneumatic Controllers and Pumps<br>☐ 123 – Storage Vessels<br>☐ 124 – Well Workovers<br>☐ 125 – Small Business Facilities<br>☐ 126 – Produced Water Management Unit<br>☐ 127 – Flowback Vessels and Preproduction Operations | 116 – Targa will comply with the applicable requirements of this subpart.<br><br>117 – N/A—There are no natural gas well liquid unloading activities at this facility; therefore, this subpart does not apply.<br><br>118– N/A – The dehydrators at this facility will have a PTE of less than two tpy of VOC; therefore, this regulation does not apply.<br><br>119 – Heaters (Units EP-3A, EP-3B Amine Reboilers; EP-6, 2-EP-6 Stabilizer Reboilers; EP-2, 2-EP-2, 3-EP-2 Trim Reboilers) have a heat rating greater than 20 MMBtu/hr; therefore, Targa will comply with the applicable requirements of this subpart.<br><br>120 – N/A – Since the facility will primarily transport liquids offsite via pipeline, this regulation does not apply.<br><br>121 – Pigging activities at this unit are over 1 tpy VOC. Therefore, Targa will comply with the applicable requirements of this subpart.<br><br>122– N/A – Pneumatic devices and pumps will utilize instrument air; therefore, this subpart does not apply.<br><br>123 – N/A – The tanks at this facility will have a PTE of less than two tpy of VOC; therefore, this regulation does not apply.<br><br>124 – N/A – There are no well workovers at this facility; therefore, this subpart does not apply.<br><br>125 – N/A – This facility does not qualify as a small business facility; therefore, this subpart does not apply.<br><br>126 – N/A – There are no produced water management units at this facility; therefore, this subpart does not apply.<br><br>127 – N/A – This is not a wellhead site; therefore, this subpart does not apply. |
| 20.2.61.109 NMAC | Smoke & Visible Emissions | Yes | EP-1; 2-EP-1; 3-EP-1;<br>EP-2; 2-EP-2; 3-EP2;<br>EP-3A; EP-3B;<br>EP-4; 2-EP-4; 3-EP-4;<br>EP-5; 2-EP-5; 3-EP-5;<br>EP-6; 2-EP-6;<br>EP-9;<br>COMB-1; GEN-1-GEN-12 | This regulation establishes controls on smoke and visible emissions from certain sources, including stationary combustion equipment such as engines, boilers, and flares. The emergency flares, reboilers, heaters, and engines are subject to this regulation. |
| 20.2.70 NMAC | Operating Permits | Yes | Facility | This regulation establishes requirements for obtaining an operating permit. This facility is a major source with respect to Title V. The facility will comply with all operating permit conditions as applicable. As stated on the cover letter, Targa requests compliance reporting periods that start on August 16th and February 16th of each year, and an annual compliance certification period that starts on August 16th of each year. |

| State Regulation Citation | Title | Applies? Enter Yes or No | Unit(s) or Facility | Justification: (You may delete instructions or statements that do not apply in the justification column to shorten the document.) |
|---|---|---|---|---|
| 20.2.71 NMAC | Operating Permit Fees | Yes | Facility | This regulation establishes a schedule of operating permit emission fees. The facility is subject to 20.2.70 NMAC and is therefore subject to requirements of this regulation. |
| 20.2.72 NMAC | Construction Permits | Yes | Facility | This regulation establishes a requirements for obtaining a construction permit. This facility is subject to this regulation and will comply with all permit conditions established in the construction permit as applicable. |
| 20.2.73 NMAC | NOI & Emissions Inventory Requirements | Yes | Facility | This regulation establishes emission inventory requirements. The facility meets the applicability requirements of 20.2.73.300 NMAC. The facility will meet all applicable reporting requirements under 20.2.73.300.B.1 NMAC. |
| 20.2.74 NMAC | Permits – Prevention of Significant Deterioration (PSD) | No | N/A | This regulation establishes requirements for obtaining a prevention of significant deterioration permit. This facility is not a PSD major source. Therefore, this regulation does not apply. |
| 20.2.75 NMAC | Construction Permit Fees | Yes | Facility | This regulation establishes a schedule of operating permit emission fees. This facility is subject to 20.2.72 NMAC and in turn subject to 20.2.75 NMAC. The facility is exempt from annual fees under this part (20.2.75.11.E NMAC) as it is subject to fees pursuant to 20.2.71 NMAC. |
| 20.2.77 NMAC | New Source Performance | Yes | EP-2; 2-EP-2; 3-EP2;<br>EP-3A; EP-3B;<br>D-1-D-4; 2-D-1-2-D-8; 3-D-1 – 3-D-8<br>EP-5; 2-EP-5; 3-EP-5;<br>EP-6; 2-EP-6;<br>EP-8; 2-EP-8; 3-EP-8<br>FUG;<br>T-1; T-2; T-3; T-4; T-5;<br>GEN-1-GEN-2 | This is a stationary source which is subject to the requirements of 40 CFR Part 60. |
| 20.2.78 NMAC | Emission Standards for HAPS | No | N/A | This facility emits hazardous air pollutants which are subject to the requirements of 40 CFR Part 61. However, there are no units subject to 40 CFR Part 61; therefore, this regulation does not apply. |
| 20.2.79 NMAC | Permits – Nonattainment Areas | No | Facility | This regulation establishes the requirements for obtaining a nonattainment area permit. The facility is not located in a non-attainment area and therefore is not subject to this regulation. |
| 20.2.80 NMAC | Stack Heights | No | N/A | This regulation establishes requirements for the evaluation of stack heights and other dispersion techniques. This regulation does not apply, as all stacks at the facility will follow good engineering practice. |
| 20.2.82 NMAC | MACT Standards for source categories of HAPS | Yes | GEN-1-GEN-2;<br>EP-7; 2-EP-7; 3-EP-7 | This regulation applies to all sources emitting hazardous air pollutants, which are subject to the requirements of 40 CFR Part 63. The site has dehy units that are subject to MACT Subparts HH and diesel engines subject to MACT ZZZZ. |

## Table for Applicable Federal Regulations:

| Federal Regulation Citation | Title | Applies? Enter Yes or No | Unit(s) or Facility | Justification: |
|---|---|---|---|---|
| 40 CFR 50 | NAAQS | No | N/A | The modeling and conditions developed from the modeling are the applicable requirements to demonstration compliance with the NAAQs. |
| NSPS 40 CFR 60, Subpart A | General Provisions | Yes | EP-2; 2-EP-2; 3-EP2; EP-3A; EP-3B; D-1-D-4; 2-D-1-2-D-8; 3-D-1 – 3-D-8 EP-5; 2-EP-5; 3-EP-5; EP-6; 2-EP-6; EP-8; 2-EP-8; 3-EP-8 FUG; T-1; T-2; T-3; T-4; T-5; GEN-1-GEN-2 | Heaters are subject to NSPS Dc. [40 CFR §60.48c]<br>Compressors are subject to NSPS OOOO, OOOOa, or OOOOb.<br>Amine unit is subject to NSPS OOOOa. [40 CFR §60.5385a]<br>Facility fugitives are subject to NSPS OOOOa. [40 CFR §60.5400a]<br>Tanks 1, 2, 3, 4, and 5 are subject to NSPS Kb and OOOOa. [40 CFR §60.5365a]<br>GEN-1-GEN-2 are subject to NSPS IIII. |
| NSPS 40 CFR60.40a, Subpart Da | Subpart Da, Performance Standards for **Electric Utility Steam Generating Units** | No | N/A | This regulation establishes standards of performance for fossil-fuel-fired stream generators. This regulation does not apply as the facility does not have any fossil fuel-fired steam generating units with a heat input rate of 250 MMBtu/hr [§60.40(a)(1)]. |
| NSPS 40 CFR60.40b Subpart Db | **Electric Utility Steam Generating Units** | No | N/A | This regulation establishes standards of performance for electric utility steam generating units. This regulation does not apply because the facility does not operate any electric utility steam generating units. |
| 40 CFR 60.40c, Subpart Dc | Standards of Performance for Small Industrial-Commercial-Institutional Steam Generating Units | Yes | EP-2; 2-EP-2; 3-EP-2; EP-3A; EP-3B; EP-6; 2-EP-6 | This facility has steam generating units for which construction, modification or reconstruction is commenced after June 9, 1989 and that have a maximum design heat input capacity of 29 MW (100 MMBtu/hr) or less, but greater than or equal to 2.9 MW (10 MMBtu/hr). Only recordkeeping and notification requirements apply as the units burn only natural gas. |
| NSPS 40 CFR 60, Subpart Ka | Standards of Performance for **Storage Vessels for Petroleum Liquids** for which Construction, Reconstruction, or Modification Commenced After May 18, 1978, and **Prior** to July 23, 1984 | No | N/A | All hydrocarbon tanks having a storage capacity less than 151,416 liters (40,000 gallons) that are used to store petroleum liquids commenced construction after May 18, 1978. Therefore, this regulation does not apply. |
| NSPS 40 CFR 60, Subpart Kb | Standards of Performance for **Volatile Organic Liquid Storage** | Yes | T-1; T-2; T-3; | This facility has storage vessels with a capacity greater than or equal to 75 cubic meters ($m^3$) that is used to store volatile organic |

| Federal Regulation Citation | Title | Applies? Enter Yes or No | Unit(s) or Facility | Justification: |
|---|---|---|---|---|
| | **Vessels** (Including Petroleum Liquid Storage Vessels) for Which Construction, Reconstruction, or Modification Commenced **After** July 23, 1984 | | T-4; T-5 | liquids (VOL) for which construction, reconstruction, or modification is commenced after July 23, 1984. |
| NSPS 40 CFR 60.330 Subpart GG | **Stationary Gas Turbines** | No | N/A | This Facility does not operate stationary gas turbines with a heat input equal to or greater than 10 million Btu per hour. Therefore this regulation does not apply. |
| NSPS 40 CFR 60, Subpart KKK | Leaks of VOC from **Onshore Gas Plants** | No | N/A | This facility commenced construction after August 23, 2011. Thus, the facility is not subject to this subpart. |
| NSPS 40 CFR Part 60 Subpart LLL | Standards of Performance for **Onshore Natural Gas Processing**: $SO_2$ Emissions | No | N/A | The facility is a natural gas processing plant; however, there is no sulfur recovery plant. Thus, this location does not meet the applicability criteria of 40 CFR §60.640. |
| NSPS 40 CFR Part 60 Subpart OOOO | Standards of Performance for Crude Oil and Natural Gas Production, Transmission, and Distribution for which construction, modification or reconstruction commenced after August 23, 2011 and before September 18, 2015 | Yes | Train 2 | Reciprocating electric compressors 2-D-1 through 2-D-8 and fugitive components associated with Train 2 are existing affected facilities that will be relocated from another site and were previously subject to NSPS OOOO. Targa will make a final determination of NSPS OOOO/a/b applicability for these relocated sources and will comply with the NSPS as required. Train 2 will rely on the existing amine sweetening unit installed with Train 1, which is subject to NSPS OOOOa. Pneumatic devices and pumps will utilize instrument air. |
| NSPS 40 CFR Part 60 Subpart OOOOa | Standards of Performance for Crude Oil and Natural Gas Facilities for which Construction, Modification or Reconstruction Commenced **After** September 18, 2015 | Yes | See Justification column | D-1 through D-7 are electric-driven compressors associated with Train 1 and were manufactured after September 18, 2015 and are thus subject to **§**60.5385a, **§**60.5410a, **§**60.5415a, and **§**60.5420a.<br><br>T-1, T-2, T-3, T-4, and T-5 are storage vessels constructed after September 18, 2015 with federally enforceable limitations that limit emissions to less than 6 tpy of VOCs. T-6 is a storage vessel that emits less than 6 tpy of VOCs. As such, T1 to T6 are not subject to **§**60.5395a, **§**60.5410a, **§**60.5417a, **§**60.5420a.<br><br>The amine units (single still vent EP-8) are sweetening units as defined in this subpart that were constructed after September 18, 2015. Per **§**60.5365a(g) (3) the amine units are required to comply with **§**60.5423a(c) but not required to comply with **§**60.5405a through **§**60.5407, **§**60.5410a(g), and **§**60.5415a(g). |

| Federal Regulation Citation | Title | Applies? Enter Yes or No | Unit(s) or Facility | Justification: |
|---|---|---|---|---|
| | | | | The facility is defined as an onshore natural gas processing plant. Therefore, fugitives are covered by §60.5400a, §60.5401a, §60.5402a, §60.5421a, and §60.5422a. Pneumatic devices and pumps will utilize instrument air. |
| NSPS 40 CFR 60 Subpart IIII | Standards of performance for Stationary Compression Ignition Internal Combustion Engines | Yes | GEN-1 – GEN-2 | This regulation establishes standards of performance for stationary compression ignition internal combustion engines. This rule applies to IC engines (diesel engines) that commenced construction after July 11, 2005. Permanent diesel engines at the site are subject to emission standards under this subpart. Engines are Tier 4 diesel engines and meet standards on Table 1 of 40 CFR 89.112.<br><br>Portable engines (GEN-3-GEN-12) are not subject to this rule as they will not be located at the facility for longer than 12 months. |
| NSPS 40 CFR Part 60 Subpart JJJJ | Standards of Performance for Stationary Spark Ignition Internal Combustion Engines | No | N/A | This regulation establishes standards of performance for stationary compression ignition internal combustion engines. There are no stationary spark ignition internal combustion engines at the facility. This regulation does not apply. |
| NSPS 40 CFR 60 Subpart TTTT | Standards of Performance for Greenhouse Gas Emissions for Electric Generating Units | No | N/A | This subpart establishes emission standards and compliance schedules for the control of greenhouse gas (GHG) emissions from a steam generating unit, IGCC, or a stationary combustion turbine that commences construction after January 8, 2014 or commences modification or reconstruction after June 18, 2014. This facility does not have any steam generating units; therefore, the facility is not subject to this regulation. |
| NSPS 40 CFR 60 Subpart UUUU | Emissions Guidelines for Greenhouse Gas Emissions and Compliance Times for Electric Utility Generating Units | No | N/A | This subpart establishes emission guidelines and approval criteria for State or multi-State plans that establish emission standards limiting greenhouse gas (GHG) emissions from an affected steam generating unit, integrated gasification combined cycle (IGCC), or stationary combustion turbine. This facility does not generate electricity; therefore, this regulation does not apply. |
| NSPS 40 CFR 60, Subparts WWW, XXX, Cc, and Cf | Standards of performance for Municipal Solid Waste (MSW) Landfills | No | N/A | The facility is not a municipal solid waste landfill; therefore, this regulation does not apply. |
| NESHAP 40 CFR 61 Subpart A | General Provisions | No | N/A | NSPS 40 CFR 61 does not apply to the facility because the facility does not emit or have the triggering substances on site and/or the facility is not involved in the triggering activity. The facility is not subject to this regulation. None of the subparts of Part 61 apply to the facility. |
| NESHAP 40 CFR 61 Subpart E | National Emission Standards for **Mercury** | No | N/A | This regulation establishes a national emission standard for mercury. The facility does not have stationary sources which process mercury ore to recover mercury, use mercury chlor-alkali cells to produce chlorine gas and alkali metal hydroxide, and incinerate or dry wastewater treatment plant sludge [40 CFR Part 61.50]. The facility is not subject to this regulation. |

| Federal Regulation Citation | Title | Applies? Enter Yes or No | Unit(s) or Facility | Justification: |
|---|---|---|---|---|
| NESHAP<br>40 CFR 61 Subpart V | National Emission Standards for **Equipment Leaks** (Fugitive Emission Sources) | No | N/A | This regulation establishes national emission standards for equipment leaks (fugitive emission sources). The facility does not have equipment that operates in volatile hazardous air pollutant (VHAP) service [40 CFR Part 61.240]. The regulated activities subject to this regulation do not take place at this facility. The facility is not subject to this regulation. |
| MACT<br>40 CFR 63, Subpart A | General Provisions | Yes | GEN-1-GEN-2; EP-7; 2-EP-7; 3-EP-7 | This facility is an area source for HAPs. Area source provisions of 40 CFR §63 Xubpart HH apply to the glycol dehydrators at the site. |
| MACT<br>40 CFR 63.760 Subpart HH | **Oil and Natural Gas Production Facilities** | Yes | EP-7;<br>2-EP-7;<br>3-EP-7 | This regulation establishes national emission standards for hazardous air pollutants from oil and natural gas production facilities. This facility is a HAP Area Source and is subject to the requirements of 40 CFR §63 Subpart HH. Dehydrators EP-7, 2-EP-7, 3-EP-7 have actual and potential emissions less than 1 tpy (0.9 Megagrams per year) and are therefore exempt from control requirements per 40 CFR §63.764(e)(1)(ii). Records of the exempt status will be maintained as required in 40 CFR §63.774(d)(1). |
| MACT<br>40 CFR 63 Subpart HHH | National Emission Standards for Hazardous Air Pollutants From Natural Gas Transmission and Storage Facilities | No | N/A | This facility is not a natural gas transmission or storage facility. Thus, this subpart does not apply. |
| MACT 40 CFR 63 Subpart DDDDD | National Emission Standards for Hazardous Air Pollutants for Major Industrial, Commercial, and Institutional Boilers & Process Heaters | No | N/A | This regulation establishes national emission standards for hazardous air pollutants for major industrial, commercial, and institutional boilers and process heaters at Major sources of HAPs. The facility is an area source of HAPs; therefore, this regulation does not apply. |
| MACT 40 CFR 63 Subpart UUUUU | National Emission Standards for Hazardous Air Pollutants Coal & Oil Fire Electric Utility Steam Generating Unit | No | N/A | This subpart establishes national emission limitations and work practice standards for hazardous air pollutants (HAP) emitted from coal- and oil-fired electric utility steam generating units (EGUs) as defined in §63.10042 of this subpart. This facility does not contain an affected source under this regulation. This regulation does not apply. |
| MACT<br>40 CFR 63 Subpart ZZZZ | National Emissions Standards for Hazardous Air Pollutants for Stationary Reciprocating Internal Combustion Engines (**RICE MACT**) | No | GEN-1 – GEN-2 | This regulation defines national emissions standards for HAPs for stationary Reciprocating Internal Combustion Engines. Units GEN-1 and GEN -2 are Tier 4 diesel engines subject to MACT ZZZZ and meet applicable requirements.<br>Portable engines (GEN-3-GEN-12) are not subject to this rule as they will not be located at the facility for longer than 12 months. |

| Federal Regulation Citation | Title | Applies? Enter Yes or No | Unit(s) or Facility | Justification: |
|---|---|---|---|---|
| 40 CFR 64 | **Compliance Assurance Monitoring** | Yes | EP-7, 2-EP-7, 3-EP-7, EP-8, 2-EP-8, 3-EP-8 and LOAD | This regulation establishes requirements for a Compliance Assurance Monitoring (CAM) plan for pollutant-specific emissions units at a major source required for part 70 or 71 permitting. Units EP-7, 2-EP-7, 3-EP-7, EP-8, 2-EP-8, 3-EP-8 and LOAD at this facility subject to the requirements of 40 CFR 64, Compliance Assurance Monitoring (CAM). |
| 40 CFR 68 | **Chemical Accident Prevention** | No | Facility | This facility is exempt from being subject to this chapter as it handles naturally occurring hydrocarbon mixtures as stated in §68.115(b)(2)(iii). |
| Title IV – Acid Rain 40 CFR 72 | **Acid Rain** | No | N/A | This part establishes the acid rain program. This part does not apply because the facility is not covered by this regulation [40 CFR Part §72.6]. |
| Title IV – Acid Rain 40 CFR 73 | **Sulfur Dioxide** Allowance Emissions | No | N/A | This part establishes the acid rain program. This part does not apply because the facility is not covered by this regulation [40 CFR Part §72.6]. |
| Title IV-Acid Rain 40 CFR 75 | **Continuous Emissions Monitoring** | No | N/A | This part establishes the acid rain program. This part does not apply because the facility is not covered by this regulation [40 CFR Part §72.6]. |
| Title IV – Acid Rain 40 CFR 76 | **Acid Rain** Nitrogen Oxides **Emission Reduction Program** | No | N/A | This part establishes the acid rain program. This part does not apply because the facility is not covered by this regulation [40 CFR Part §72.6]. |
| Title VI – 40 CFR 82 | Protection of **Stratospheric Ozone** | No | N/A | This regulation establishes a regulation for protection of the stratospheric ozone. The regulation is not applicable because the facility does not “service”, “maintain”, or “repair” class I or class II appliances nor “disposes” of the appliances [40 CFR §Part 82.1(a)]. |

# Section 14

## Operational Plan to Mitigate Emissions

(Submitting under 20.2.70, 20.2.72, 20.2.74 NMAC)

---

☒ **Title V Sources** (20.2.70 NMAC)**:** By checking this box and certifying this application the permittee certifies that it has developed an **Operational Plan to Mitigate Emissions During Startups, Shutdowns, and Emergencies** defining the measures to be taken to mitigate source emissions during startups, shutdowns, and emergencies as required by 20.2.70.300.D.5(f) and (g) NMAC. This plan shall be kept on site to be made available to the Department upon request. This plan should not be submitted with this application.

☐ **NSR** (20.2.72 NMAC)**, PSD** (20.2.74 NMAC) **& Nonattainment** (20.2.79 NMAC) **Sources:** By checking this box and certifying this application the permittee certifies that it has developed an **Operational Plan to Mitigate Source Emissions During Malfunction, Startup, or Shutdown** defining the measures to be taken to mitigate source emissions during malfunction, startup, or shutdown as required by 20.2.72.203.A.5 NMAC. This plan shall be kept on site to be made available to the Department upon request. This plan should not be submitted with this application.

☒ **Title V** (20.2.70 NMAC)**, NSR** (20.2.72 NMAC)**, PSD** (20.2.74 NMAC) **& Nonattainment** (20.2.79 NMAC) **Sources:** By checking this box and certifying this application the permittee certifies that it has established and implemented a Plan to Minimize Emissions During Routine or Predictable Startup, Shutdown, and Scheduled Maintenance through work practice standards and good air pollution control practices as required by 20.2.7.14.A and B NMAC. This plan shall be kept on site or at the nearest field office to be made available to the Department upon request. This plan should not be submitted with this application.

---

- To the maximum extent practicable, the air pollution control equipment, process equipment, or processes, will be maintained and operated in a manner consistent with good practice for minimizing emissions;
- Repairs will be made in an expeditious fashion when the operator becomes aware that applicable emission limitations are being exceeded;
- Off-shift labor and overtime will be utilized, to the extent practicable, to ensure that such repairs were made as expeditiously as practicable;
- Scheduled maintenance will be planned ahead to coincide with maintenance on other production equipment, or other source shutdowns, to the extent practicable;
- The amount and duration of the excess emissions (including any during bypass) periods will be minimized to the maximum extent practicable;
- All possible steps will be taken to minimize the impact of the excess emissions on ambient air quality; and,
- The facility will monitor all operations to ensure that excess emissions are not part of a recurring pattern indicative of inadequate design, operation, or maintenance.

# Section 15

## Alternative Operating Scenarios

(Submitting under 20.2.70, 20.2.72, 20.2.74 NMAC)

---

**Alternative Operating Scenarios:** Provide all information required by the department to define alternative operating scenarios. This includes process, material and product changes; facility emissions information; air pollution control equipment requirements; any applicable requirements; monitoring, recordkeeping, and reporting requirements; and compliance certification requirements. Please ensure applicable Tables in this application are clearly marked to show alternative operating scenario.

**Construction Scenarios**: When a permit is modified authorizing new construction to an existing facility, NMED includes a condition to clearly address which permit condition(s) (from the previous permit and the new permit) govern during the interval between the date of issuance of the modification permit and the completion of construction of the modification(s). There are many possible variables that need to be addressed such as: Is simultaneous operation of the old and new units permitted and, if so for example, for how long and under what restraints? In general, these types of requirements will be addressed in Section A100 of the permit, but additional requirements may be added elsewhere. Look in A100 of our NSR and/or TV permit template for sample language dealing with these requirements. Find these permit templates at: www.env.nm.gov/air-quality/permitting-section-procedures-and-guidance/. Compliance with standards must be maintained during construction, which should not usually be a problem unless simultaneous operation of old and new equipment is requested.

In this section, under the bolded title "Construction Scenarios", specify any information necessary to write these conditions, such as: conservative-realistic estimated time for completion of construction of the various units, whether simultaneous operation of old and new units is being requested (and, if so, modeled), whether the old units will be removed or decommissioned, any PSD ramifications, any temporary limits requested during phased construction, whether any increase in emissions is being requested as SSM emissions or will instead be handled as a separate Construction Scenario (with corresponding emission limits and conditions, etc.

---

There will be an alternate operating scenario to route the amine flash gas stream from the commingled fuel gas header to the flare (Unit EP-1). This alternative operating scenario will be in place to mitigate the safety and reliability concerns associated with the risk of condensed liquids in the fuel supply to the amine hot oil heaters (Units EP-3A and EP-3B) during low temperature months. Calculations and emission details for this scenario are provided in Section 6.

# Section 16

## Air Dispersion Modeling

1) Minor Source Construction (20.2.72 NMAC) and Prevention of Significant Deterioration (PSD) (20.2.74 NMAC) ambient impact analysis (modeling): Provide an ambient impact analysis as required at 20.2.72.203.A(4) and/or 20.2.74.303 NMAC and as outlined in the Air Quality Bureau's Dispersion Modeling Guidelines found on the Planning Section's modeling website. If air dispersion modeling has been waived for one or more pollutants, attach the AQB Modeling Section modeling waiver approval documentation.
2) SSM Modeling: Applicants must conduct dispersion modeling for the total short term emissions during routine or predictable startup, shutdown, or maintenance (SSM) using realistic worst case scenarios following guidance from the Air Quality Bureau's dispersion modeling section. Refer to "Guidance for Submittal of Startup, Shutdown, Maintenance Emissions in Permit Applications (http://www.env.nm.gov/aqb/permit/app_form.html) for more detailed instructions on SSM emissions modeling requirements.
3) Title V (20.2.70 NMAC) ambient impact analysis: Title V applications must specify the construction permit and/or Title V Permit number(s) for which air quality dispersion modeling was last approved. Facilities that have only a Title V permit, such as landfills and air curtain incinerators, are subject to the same modeling required for preconstruction permits required by 20.2.72 and 20.2.74 NMAC.

| **What is the purpose of this application?** | Enter an X for each purpose that applies |
|---|---|
| New PSD major source or PSD major modification (20.2.74 NMAC). See #1 above. | |
| New Minor Source or significant permit revision under 20.2.72 NMAC (20.2.72.219.D NMAC). See #1 above. **Note:** Neither modeling nor a modeling waiver is required for VOC emissions. | |
| Reporting existing pollutants that were not previously reported. | |
| Reporting existing pollutants where the ambient impact is being addressed for the first time. | |
| Title V application (new, renewal, significant, or minor modification. 20.2.70 NMAC). See #3 above. | X |
| Relocation (20.2.72.202.B.4 or 72.202.D.3.c NMAC) | |
| Minor Source Technical Permit Revision 20.2.72.219.B.1.d.vi NMAC for like-kind unit replacements. | |
| Other: i.e. SSM modeling. See #2 above. | |
| This application does not require modeling since this is a No Permit Required (NPR) application. | |
| This application does not require modeling since this is a Notice of Intent (NOI) application (20.2.73 NMAC). | |
| This application does not require modeling according to 20.2.70.7.E(11), 20.2.72.203.A(4), 20.2.74.303, 20.2.79.109.D NMAC and in accordance with the Air Quality Bureau's Modeling Guidelines. | |

**Check each box that applies:**

☐ See attached, approved modeling **waiver for all** pollutants from the facility.

☐ See attached, approved modeling **waiver for some** pollutants from the facility.

☐ Attached in Universal Application Form 4 (UA4) is a **modeling report for all** pollutants from the facility.

☐ Attached in UA4 is a **modeling report for some** pollutants from the facility.

☒ No modeling is required.

# Section 17

## Compliance Test History

(Submitting under 20.2.70, 20.2.72, 20.2.74 NMAC)

---

To show compliance with existing NSR permits conditions, you must submit a compliance test history. The table below provides an example.

---

### Compliance Test History Table

| Unit No. | Test Description | Test Date |
|---|---|---|
| COMB-1 (VCU) | State Compliance | 12/1/2023 |
| EP-9 (Thermal Oxidizer) | State Compliance | 5/17/2023 |

# Section 19

## Requirements for Title V Program

---

**Who Must Use this Attachment**:

* Any major source as defined in 20.2.70 NMAC.
* Any source, including an area source, subject to a standard or other requirement promulgated under Section 111 - Standards of Performance for New Stationary Sources, or Section 112 Hazardous Air Pollutants, of the 1990 federal Clean Air Act ("federal Act"). Non-major sources subject to Sections 111 or 112 of the federal Act are exempt from the obligation to obtain an 20.2.70 NMAC operating permit until such time that the EPA Administrator completes rulemakings that require such sources to obtain operating permits. In addition, sources that would be required to obtain an operating permit solely because they are subject to regulations or requirements under Section 112(r) of the federal Act are exempt from the requirement to obtain an Operating Permit.
* Any Acid Rain source as defined under title IV of the federal Act. The Acid Rain program has additional forms. See www.env.nm.gov/air-quality/air-quality-title-v-operating-permits-guidance-page/. Sources that are subject to both the Title V and Acid Rain regulations are encouraged to submit both applications simultaneously.
* Any source in a source category designated by the EPA Administrator ("Administrator"), in whole or in part, by regulation, after notice and comment.

---

Road Runner Gas Processing Plant is a Title V major source as defined in the 20.2.70 NMAC.

---

### 19.1 - 40 CFR 64, Compliance Assurance Monitoring (CAM) (20.2.70.300.D.10.e NMAC)

Any source subject to 40CFR, Part 64 (Compliance Assurance Monitoring) must submit all the information required by section 64.7 with the operating permit application. The applicant must prepare a separate section of the application package for this purpose; if the information is already listed elsewhere in the application package, make reference to that location. Facilities not subject to Part 64 are invited to submit periodic monitoring protocols with the application to help the AQB to comply with 20.2.70 NMAC. Sources subject to 40 CFR Part 64, must submit a statement indicating your source's compliance status with any enhanced monitoring and compliance certification requirements of the federal Act.

---

Units EP-7, 2-EP-7, 3-EP-7, EP-8, 2-EP-8, 3-EP-8 and LOAD at this facility subject to the requirements of 40 CFR 64, Compliance Assurance Monitoring (CAM).

---

### 19.2 - Compliance Status (20.2.70.300.D.10.a & 10.b NMAC)

Describe the facility's compliance status with each applicable requirement at the time this permit application is submitted. This statement should include descriptions of or references to all methods used for determining compliance. This statement should include descriptions of monitoring, recordkeeping and reporting requirements and test methods used to determine compliance with all applicable requirements. Refer to Section 2, Tables 2-N and 2-O of the Application Form as necessary. (20.2.70.300.D.11 NMAC) For facilities with existing Title V permits, refer to most recent Compliance Certification for existing requirements. Address new requirements such as CAM, here, including steps being taken to achieve compliance.

---

All sources at this facility are currently operating in compliance with all applicable requirements.

---

## 19.3 - Continued Compliance (20.2.70.300.D.10.c NMAC)

Provide a statement that your facility will continue to be in compliance with requirements for which it is in compliance at the time of permit application. This statement must also include a commitment to comply with other applicable requirements as they come into effect during the permit term. This compliance must occur in a timely manner or be consistent with such schedule expressly required by the applicable requirement.

---

Targa Northern Delaware, LLC will continue to comply with the applicable requirements in a timely manner as they come into effect during the permit term.

---

## 19.4 - Schedule for Submission of Compliance (20.2.70.300.D.10.d NMAC)

You must provide a proposed schedule for submission to the department of compliance certifications during the permit term. This certification must be submitted annually unless the applicable requirement or the department specifies a more frequent period. A sample form for these certifications will be attached to the permit.

---

Targa Northern Delaware, LLC will submit annual compliance certifications.

---

## 19.5 - Stratospheric Ozone and Climate Protection

In addition to completing the four (4) questions below, you must submit a statement indicating your source's compliance status with requirements of Title VI, Section 608 (National Recycling and Emissions Reduction Program) and Section 609 (Servicing of Motor Vehicle Air Conditioners).

---

1. Does your facility have any air conditioners or refrigeration equipment that uses CFCs, HCFCs or other ozone-depleting substances? ☐ **Yes** ☒ **No**

2. Does any air conditioner(s) or any piece(s) of refrigeration equipment contain a refrigeration charge greater than 50 lbs? ☐ **Yes** ☒ **No**

   (If the answer is yes, describe the type of equipment and how many units are at the facility.)

3. Do your facility personnel maintain, service, repair, or dispose of any motor vehicle air conditioners (MVACs) or appliances ("appliance" and "MVAC" as defined at 82. 152)? ☐ **Yes** ☒ **No**

4. Cite and describe which Title VI requirements are applicable to your facility (i.e. 40 CFR Part 82, Subpart A through G.)

---

Targa Northern Delaware, LLC states that the Road Runner Gas Processing Plant does not service, maintain, repair, or dispose of appliances that use Class I or Class II chemicals (chlorofluorocarbons, halon, carbon tetrachloride, methyl chloroform or hydrochlorofluorocarbon). Additionally, motor vehicle air conditioners are not serviced at the Road Runner Gas Processing Plant. Therefore, the requirements of Title VI, Sections 608 and 609 of the Clean Air Act are not applicable to this facility.

---

## 19.6 - Compliance Plan and Schedule

Applications for sources, which are not in compliance with all applicable requirements at the time the permit application is submitted to the department, must include a proposed compliance plan as part of the permit application package. This plan shall include the information requested below:

**A. Description of Compliance Status:** (20.2.70.300.D.11.a NMAC)

A narrative description of your facility's compliance status with respect to all applicable requirements (as defined in 20.2.70 NMAC) at the time this permit application is submitted to the department.

**B. Compliance plan:** (20.2.70.300.D.11.B NMAC)
A narrative description of the means by which your facility will achieve compliance with applicable requirements with which it is not in compliance at the time you submit your permit application package.

**C. Compliance schedule:** (20.2.70.300D.11.c NMAC)
A schedule of remedial measures that you plan to take, including an enforceable sequence of actions with milestones, which will lead to compliance with all applicable requirements for your source. This schedule of compliance must be at least as stringent as that contained in any consent decree or administrative order to which your source is subject. The obligations of any consent decree or administrative order are not in any way diminished by the schedule of compliance.

**D. Schedule of Certified Progress Reports:** (20.2.70.300.D.11.d NMAC)
A proposed schedule for submission to the department of certified progress reports must also be included in the compliance schedule. The proposed schedule must call for these reports to be submitted at least every six (6) months.

**E. Acid Rain Sources:** (20.2.70.300.D.11.e NMAC)
If your source is an acid rain source as defined by EPA, the following applies to you. For the portion of your acid rain source subject to the acid rain provisions of title IV of the federal Act, the compliance plan must also include any additional requirements under the acid rain provisions of title IV of the federal Act. Some requirements of title IV regarding the schedule and methods the source will use to achieve compliance with the acid rain emissions limitations may supersede the requirements of title V and 20.2.70 NMAC. You will need to consult with the Air Quality Bureau permitting staff concerning how to properly meet this requirement.

---

Targa Northern Delaware, LLC is currently operating in compliance with all applicable requirements. Therefore, a Compliance Plan is not required.

---

## 19.7 - 112(r) Risk Management Plan (RMP)

Any major sources subject to section 112(r) of the Clean Air Act must list all substances that cause the source to be subject to section 112(r) in the application. The permittee must state when the RMP was submitted to and approved by EPA.

---

N/A. There are no sources at the facility subject to Section 112(r) of the Clean Air Act.

---

## 19.8 - Distance to Other States, Bernalillo, Indian Tribes and Pueblos

Will the property on which the facility is proposed to be constructed or operated be closer than 80 km (50 miles) from other states, local pollution control programs, and Indian tribes and pueblos (20.2.70.402.A.2 and 20.2.70.7.B NMAC)?

(If the answer is yes, state which apply and provide the distances.)

---

Other States: Texas, 30.6 km
Indian Tribes: None
Lea County: 37 km

---

## 19.9 - Responsible Official

Provide the Responsible Official as defined in 20.2.70.7.AD NMAC:

**R.O. Name:** Jimmy Oxford
**Address:** 3100 McKinnon Street, Suite 800, Dallas, TX 75201.

**Phone:** (940) 220-2493
**Email:** JOxford@targaresources.com

# Section 20

## Other Relevant Information

---

**Other relevant information**. Use this attachment to clarify any part in the application that you think needs explaining. Reference the section, table, column, and/or field. Include any additional text, tables, calculations or clarifying information.

Additionally, the applicant may propose specific permit language for AQB consideration. In the case of a revision to an existing permit, the applicant should provide the old language and the new language in track changes format to highlight the proposed changes. If proposing language for a new facility or language for a new unit, submit the proposed operating condition(s), along with the associated monitoring, recordkeeping, and reporting conditions. In either case, please limit the proposed language to the affected portion of the permit.

---

A CAM Plan is included in this Section.

# Targa Northern Delaware, LLC /Road Runner Gas Processing Plant
# CAM Plan for Amine Vents, Dehydrators and Loading Controlled by Thermal Oxidizer

I. Background

A. *Emissions Unit*

Description: Condensate Truck Loading, Amine and Glycol Dehydrator Vents
Identification: LOAD, EP-7, 2-EP-7, 3-EP-7, EP-8, 2-EP-8, 3-EP-8
Facility: Road Runner Gas Processing Plant

B. *Applicable Regulation, Emission Limit, and Pre-CAM Monitoring Requirements*

Regulation: Operation and reporting requirements created in NSR Permit 7200-M4 et seq. to establish federally enforceable recognition of the condensate truck loading, amine and glycol dehydrator vents.

Emission Limits: In accordance with Table 106.A, a zero emissions limit is established for Loading, Amine and Glycol Dehydrator Vents (Units LOAD, EP-7, 2-EP-7, 3-EP-7, EP-8, 2-EP-8, 3-EP-8)

Uncontrolled Emissions:

| Unit | VOC (pph) | VOC (tpy) | $H_2S$ (pph) | $H_2S$ (tpy) |
|---|---|---|---|---|
| LOAD | 257.5 | 1088.27 | 0 | 0 |
| EP-7 | 102.15 | 447.40 | 2.15E-05 | 9.42E-05 |
| 2-EP-7 | 102.15 | 447.40 | 2.15E-05 | 9.42E-05 |
| 3-EP-7 | 102.15 | 447.40 | 2.15E-05 | 9.42E-05 |
| EP-8 | 74.67 | 327.04 | 4.72 | 20.68 |
| 2-EP-8 | 74.67 | 327.04 | 4.72 | 20.68 |
| 3-EP-8 | 74.67 | 327.04 | 4.72 | 20.68 |

Controlled Emissions (based on the control equipment unit emissions):

| Unit | VOC (pph) | VOC (tpy) | $H_2S$ (pph) | $H_2S$ (tpy) |
|---|---|---|---|---|
| LOAD | 12.88 | 54.41 | 0 | 0 |
| EP-7 | 0.10 | 0.45 | 2.15E-08 | 9.42E-08 |
| 2-EP-7 | 0.10 | 0.45 | 2.15E-08 | 9.42E-08 |
| 3-EP-7 | 0.10 | 0.45 | 2.15E-08 | 9.42E-08 |
| EP-8 | 0.07 | 0.33 | 0.005 | 0.21 |
| 2-EP-8 | 0.07 | 0.33 | 0.005 | 0.21 |
| 3-EP-8 | 0.07 | 0.33 | 0.005 | 0.21 |

Pre-CAM Monitoring Requirements: There are no pre-CAM monitoring requirements.

C. *Control Technology, Capture System, Bypass, PER*

Controls: Thermal Oxidizer (Unit EP-9)
Capture System: N/A
Bypass: The Thermal Oxidizer is the primary control for the condensate truck loading, amine and glycol dehydrator vents.

Potential pre-control device emissions: Under 40 CFR 64.2, this is a CAM affected unit.

Potential post-control device emissions: 99.9% controlled by Thermal Oxidizer.

## II. Monitoring Approach

The key elements of the monitoring approach are presented in the attached table.

## III. Response to Excursion

Per 40 CFR §64.1, excursion is defined as: a departure from an indicator range established for monitoring under this part, consistent with any averaging period specified for averaging the results of the monitoring. Excursions of the thermal oxidizer systems that monitor the presence of combustion or visual emissions will trigger an inspection, corrective action, and reporting. Maintenance personnel will inspect the thermal oxidizer within 24 hours and make needed repairs as soon as practicable.

## Monitoring Approach: Road Runner Gas Processing Plant Thermal Oxidizer (Unit EP-9)

| | **Indicator No. 1** | **Indicator No. 2** | **Indicator No. 3** |
|---|---|---|---|
| I. Indicator | Presence of combustion in the Thermal Oxidizer | Combustion Temperature | Equipment Inspection |
| Measurement Approach | The presence of combustion in the thermal oxidizer shall be monitored by a well-maintained thermocouple with an alarm that signals non-combustion of gas. | Temperature of TO shall be measured with a thermocouple. | The thermal oxidizer is inspected on a semiannual basis to ensure that the process is properly controlled. The unit is inspected according to an NMED-approved inspection protocol which includes at minimum the methods for inspecting and adjusting proper minimum combustion temperature and proper air distribution. |
| II. Indicator Range | Flame present (sensed) or no flame present (sensed). | >1600 deg F | An excursion is defined as equipment malfunctions which results in the release of uncontrolled emissions from the amine and glycol dehydrator vent operations. |
| III. Performance Criteria A. Data Representativeness | Destruction depends upon the presence of a flame. If the flame is not present, VOC is not being destroyed. | Destruction depends upon achieving a temperature of 1600 deg F or greater. | Inspections and maintenance are being conducted on the thermal oxidizer. |
| B. QA/QC Practices and Criteria | Proper operation of the thermal oxidizer achieved by maintaining the non-combustion thermocouple with alarm system. Operators will record the date and result of each such maintenance activity, as well as repairs or replacements made. | Proper operation of the thermal oxidizer shall be achieved by maintaining the non-combustion thermocouple with the alarm system. Operators will record the date and result of each maintenance activity, as well as repairs or replacements made. | The thermal oxidizer is inspected on a semiannual basis to ensure that the process is properly controlled. The unit is inspected according to an NMED-approved inspection protocol which includes at minimum the methods for inspecting and adjusting proper minimum combustion temperature, and proper air distribution. |
| C. Monitoring Frequency | The thermocouple and alarm system will be tested twice a year by turning off the thermocouples and recording the time required for the alarm to respond. | One measurement will be recorded per 24 hours. | Semi-annually. |
| D. Data Collection Procedures | Records will be maintained of thermal oxidizer shutdown for any reason, including failure to deliver fuel, and of inspection and maintenance to the thermal oxidizer. | Temperature will be recorded automatically once per day with a data logger. Records will be available for review at the site. | Semi-annually inspections are performed and documented by the observer. Any repairs or adjustments are documented. |
| E. Averaging Period | Not applicable. | Not applicable. | Not applicable. |

## Justification

*I. Background*

The monitoring approach outlined here applies to the thermal oxidizer (EP-9) which is a control device for emissions from the Amine and Glycol Dehydrator Vents and Condensate Truck Loading. The Condensate Truck Loading, Amine and Glycol Dehydrator vents (Units LOAD, EP-7, 2-EP-7, 3-EP-7, EP-8, 2-EP-8, 3-EP-8) are the CAM affected unit.

*II. Rationale for Selection of Performance Indicators*

The destruction and removal of VOC is dependent upon combustion. Thus, the monitoring approach is based on two primary indicators: correct operation of the thermal oxidizer and integrity of the ducting from the process equipment to the thermal oxidizer.

*III. Rationale for Selection of Indicator Ranges*

In the case of ensuring proper operation of the thermal oxidizer, the presence of a flame to initiate or maintain combustion has only two states: a flame is present, or a flame is not present. By design, a well-maintained thermocouple-based alarm system will indicate the state of combustion. The Measurement of totalized flow volume will determine if the volumetric flow is in line with the design specifications, and the max velocity determined from earlier testing of the thermal oxidizer.

The permit issued by the NMED requires the thermal oxidizer to achieve 99.9 percent DRE or greater destruction efficiency.

# Section 22: Certification

Company Name: Targa Northern Delaware, LLC

I, Jimmy Oxford, hereby certify that the information and data submitted in this application are true and as accurate as possible, to the best of my knowledge and professional expertise and experience.

Signed this 21st day of May, 2025, upon my oath or affirmation, before a notary of the State of Texas.

*Signature

Date 5/21/25

Jimmy Oxford
Printed Name

Vice President of Operations
Title

Scribed and sworn before me on this 21st day of May, _____.

My authorization as a notary of the State of Texas expires on the 20th day of January, 2026.

BETTY SUE HERNANDEZ
Notary Public, State of Texas
Comm. Expires 01-20-2026
Notary ID 133543174

Notary's Signature

Date 05/21/2025

Betty Sue Hernandez
Notary's Printed Name

*For Title V applications, the signature must be of the Responsible Official as defined in 20.2.70.7.AE NMAC.