DEPARTMENT OF ENERGY
National Nuclear Security Administration
Los Alamos Site Office
Los Alamos, New Mexico 87544

AUG 18 2011

CERTIFIED MAIL – RETURN RECEIPT REQUESTED

Mr. John Kieling
Program Manager
Permits Management Program
Hazardous Waste Bureau
New Mexico Environment Department
2905 Rodeo Park Drive East, Building 1
Santa Fe, NM 87505-6303

Dear Mr. Kieling:

Subject: CLASS 2 PERMIT MODIFICATION REQUEST FOR THE ADDITION OF THE TRANSURANIC WASTE FACILITY AT TECHNICAL AREA 63 TO THE LOS ALAMOS NATIONAL LABORATORY HAZARDOUS WASTE FACILITY PERMIT, EPA ID NO. NM0890010515

The purpose of this letter is to submit and request approval for the included Resource Conservation and Recovery Act (RCRA) Class 2 permit modification request. The information provided within the attached permit modification request details the addition of one hazardous waste management unit to the *Los Alamos National Laboratory* (LANL) *Hazardous Waste Facility Permit*, hereinafter referred to as the Permit, issued by the New Mexico Environment Department (NMED) in November 2010. The unit requested for inclusion within the Permit is the Transuranic Waste Facility (TWF) hazardous waste container storage unit at Technical Area (TA) 63.

The signed LANL Compliance Order on Consent with the State of New Mexico of March 2005 requires that TA-54 Area G be closed and remediated by December 2015. The TWF will replace the transuranic (TRU) waste storage and characterization capabilities currently located at Area G. The TWF provides the necessary capacity for management of newly generated TRU waste at LANL to allow the closure of Area G in a timely and integrated manner. The TWF is part of a comprehensive, long-term strategy to consolidate hazardous and radioactive waste operations into a smaller, more compact area that can operate safely, securely, and effectively for the foreseeable future.

The information within this document and its attachments address the relevant permit application requirements of 40 CFR Part 270, Subpart B. This permit modification is necessary to seek approval for and incorporate the proposed waste storage unit into the Permit.

A pre-application public meeting for this permit modification request was held on August 10, 2011 in accordance with New Mexico Administrative Code, Title 20, Chapter 4, Part 1, Section 901 (20.4.1.901 NMAC), incorporating Code of Federal Regulations, Title 40, Part 124, Section

31 (40 CFR 124.31). Attachment H of the permit modification request includes a summary of the pre-application meeting, a list of attendees, and copies of written comments or material submitted at the meeting.

This submittal is being transmitted as a Class 2 permit modification request according to 40 CFR §270.42, Appendix I, F.1.b, which states that "Modification or addition of container units:...resulting in up to 25% increase in the facility's container storage capacity..." is a Class 2. The definition of "facility" is included in Section 1.8 of the Permit. The storage capacity requested for the TWF represents 15.6% of the container storage capacity listed in Table J-1, *Active Portion of the Facility*, of the Permit, excluding the container storage units at Area G.

Included herein are three hard copies and an electronic copy of the *Los Alamos National Laboratory Permit Modification Request Technical Area 63 Transuranic Waste Facility Hazardous Waste Storage Unit* (LA-UR-11-04758). The document also includes a draft fact sheet about the proposed permit modification, the public comment period, and the public meeting that the Permittees will hold in accordance with the requirements of 40 CFR 270.42(c). This fact sheet will be sent to the NMED-maintained LANL facility mailing list within seven days of transmittal of this request and published in local newspapers.

If you have comments or questions regarding this permit modification, please contact Gene Turner of my staff at (505) 667-5794 or Mark Haagenstad, LANS, at (505) 665-2014.

Kevin W. Smith
Manager

Enclosures

cc w/enclosures:
Laurie King, Chief (6PD-N)
New Mexico/Federal Facilities Section
Environmental Protection Agency, Region 6
1445 Ross Avenue, Suite 1200
Dallas, TX 75202-2733

cc w/o enclosures:
John Kieling
Acting Bureau Chief
Hazardous Waste Bureau
New Mexico Environment Department
2905 Rodeo Park Drive East, Building 1
Santa Fe, NM 87505-6303

Steve Pullen
Permits Management Program
Hazardous Waste Bureau
New Mexico Environment Department
2905 Rodeo Park Drive East, Building 1
Santa Fe, NM 87505-6303

G. Rael, EPO, LASO
G. Turner, EPO, LASO
C. Beard, PADOPS, LANS, MS-A102
J.C. Cantwell, ADESHQ, LANS, MS-K491
M. Graham, ADEP, LANS, MS-M991
G. Juerling, PMF-FUNCT, LANL, MS-M873
A. Grieggs, ENV-RCRA, LANS, MS-K490
S. McMichael, LC-ESH, LANL, MS-A187
M. Haagenstad, ENV-RCRA, LANS, MS-K404
ENV-DO File, LANS, MS-J978
Records Center, LASO
Official Contract File, LASO

EPO-26GT-246-371384

Permit Modification Request
Technical Area 63 Transuranic Waste Facility
Hazardous Waste Container Storage Unit

Revision 0

LA-UR-11-04758

Prepared by:

Los Alamos National Laboratory

Water Quality & Resource Conservation and Recovery Act Group

Los Alamos, New Mexico 87545

[This page has been left intentionally blank.]

Table of Contents

List of Tables v
List of Figures vi
List of Attachments vii
List of Supplements vii
List of Abbreviations and Acronyms viii
1.0 INTRODUCTION 1
1.1 REQUEST FOR PERMIT MODIFICATION 1
1.2 PURPOSE OF THE TRANSURANIC WASTE FACILITY 1
1.3 FACILITY DESCRIPTION 2
1.4 PERMIT MODIFICATION OUTLINE 2
2.0 TA-63 TWF UNIT ACTIVITIES 11
2.1 LANL FACILITY DESCRIPTION 11
2.2 TA-63 TWF UNIT 12
2.2.1 Concrete Pad 13
2.2.2 Storage Buildings 13
2.2.3 Storage and Characterization Building 15
2.2.4 Characterization Trailers 15
2.2.5 Loading/Unloading Canopy 17
2.2.6 Retention Basin 17
2.2.7 Other Project Structures 18
2.2.8 Waste Management Practices 19
2.2.8.1 Loading and Unloading 20
2.2.8.2 Storage 20
2.2.8.3 Characterization 21
2.2.8.4 Outdoor Staging/Storage 23
2.2.8.5 Free Liquid Restrictions 23
2.2.8.6 Filter Vent Changes 23
2.3 AUTHORIZED WASTES AND WASTE ACCEPTANCE 24
2.3.1 Characterization Procedures 24
2.3.2 Verification Frequencies 24
2.4 SECURITY AND ACCESS CONTROL 24
2.5 HAZARDS PREVENTION (PROCEDURES, STRUCTURES, AND EQUIPMENT) 25
2.5.1 Fire Protection 25
2.5.2 Lightning Protection 26
2.5.3 Waste Handling and Preventing Hazards during Loading/Unloading 26
2.5.4 Control of Run-on/Run-off 27
2.5.5 Preventing Water Supply Contamination 27
2.5.6 Mitigating Effects of Power Outages 28

2.5.7 Preventing Undue Exposure 29
2.5.8 Air Emission Standards for Containers 29
2.5.9 Preventing Releases to the Atmosphere 30
2.6 PREPAREDNESS AND PREVENTION 31
2.6.1 Required Equipment 31
2.6.2 Testing and Maintenance of Equipment 32
2.6.3 Access to Communications or Alarm System 33
2.6.4 Space Requirements 33
2.7 CONTINGENCY PLAN 33
2.7.1 Emergency Equipment at the TWF 34
2.7.1.1 Fire Control Equipment: 34
2.7.1.2 Communication Equipment: 34
2.7.1.3 Decontamination Equipment: 34
2.7.1.4 Personal Protective Equipment 35
2.7.1.5 Other 35
2.7.2 Support Agreements with Outside Agencies 35
2.8 IGNITABLE, REACTIVE, AND INCOMPATIBLE WASTES 35
2.9 INSPECTION 36
2.9.1 Additions to Inspection Plan Necessary for the TWF 36
2.9.1.1 On Day(s) of Waste Handling 36
2.9.1.2 Weekly Inspections 36
2.10 RECORDKEEPING REQUIREMENTS 36
2.10.1 Manifest Systems 37
2.10.2 Facility Operating Record 37
2.10.3 Availability of Facility Operating Record 37
2.10.4 Biennial Report 37
2.10.5 Unmanifested Waste Report 38
2.10.6 Additional Reports 38
2.10.6.1 Waste Minimization 38
2.10.6.2 Reporting Other Noncompliance 38
3.0 FACILITY REQUIREMENTS 43
3.1 TRAFFIC PATTERNS 43
3.1.1 Routes of Travel 43
3.1.2 Traffic Volumes 44
3.1.3 Traffic Control Signals 44
3.1.4 Road Surfacing and Load-Bearing Capacity 44
3.2 LOCATION INFORMATION 44
3.2.1 Seismic Standard 44
3.2.2 Floodplain Standard 45
3.2.3 Cultural Resources 45
3.3 TOPOGRAPHIC MAPS 45

3.4 GROUNDWATER MONITORING 46
3.5 OTHER FEDERAL LAWS 46
3.6 OTHER PERMIT ACTIVITIES 48
3.7 TRAINING 48
3.8 LAND DISPOSAL RESTRICTIONS 49
4.0 CORRECTIVE ACTION 51
4.1 INTRODUCTION 51
4.2 SWMU DESCRIPTIONS 51
4.2.1 TA-63 SWMUs 51
4.2.1.1 63-001(a) 51
4.2.1.2 63-001(b) 52
4.2.1.3 Corrective Action 52
5.0 CLOSURE PLAN 55
5.1 Closure Cost Estimate, Financial Assurance and Liability Requirements 55
6.0 REFERENCES 57
7.0 CERTIFICATION 59

List of Tables

Table 1-1 Regulatory References and Corresponding Permit Modification Request Location

Table 2-1 Proposed Storage Containers for Mixed Transuranic Waste

Table 2-2 References for Waste Stored at the TWF

Table 4-1 Solid Waste Management Unit (SWMU) Descriptions

List of Figures

Figure 2-1 LANL Regional Location
Figure 2-2 Land Use Surrounding LANL
Figure 2-3 Location of TA-63 at Los Alamos National Laboratory
Figure 2-4 Structures in the Vicinity of Technical Area 63
Figure 2-5 TA-63 Site Plan
Figure 2-6 Storage Buildings Floor Plan
Figure 2-7 Storage Buildings Foundation Plan
Figure 2-8 Storage Buildings Structural Elevations
Figure 2-9 Storage Buildings Structural Elevations
Figure 2-10 Storage Buildings Structural Sections
Figure 2-11 Storage Buildings Foundation Details
Figure 2-12 Storage Buildings Elevations
Figure 2-13 Storage Buildings Fire Protection Plan
Figure 2-14 Storage Buildings Fire Protection P & IDS
Figure 2-15 Storage Buildings Plumbing Details (Emergency Eyewash/Shower)
Figure 2-16 Storage & Characterization Building Floor Plan
Figure 2-17 Storage & Characterization Building Foundation Plan
Figure 2-18 Storage & Characterization Building Structural Elevations
Figure 2-19 Storage & Characterization Building Structural Elevations
Figure 2-20 Storage & Characterization Building Structural Sections
Figure 2-21 Storage & Characterization Building Foundation Details
Figure 2-22 Storage & Characterization Building Elevations
Figure 2-23 Storage & Characterization Building Sections
Figure 2-24 Storage & Characterization Building Fire Protection Plan
Figure 2-25 Storage & Characterization Building Fire Protection P & ID
Figure 2-26 Canopy Floor Plan
Figure 2-27 Canopy Structural Sections
Figure 2-28 Canopy Foundation Details
Figure 2-29 Canopy Elevations
Figure 2-30 Canopy Building Sections

Figure 2-31 Canopy Fire Protection Plan
Figure 2-32 Retention Basin Foundation Plan
Figure 2-33 Retention Basin Foundation Details
Figure 2-34 Storm Drain Plan and Profile
Figure 2-35 Storm Drain Inlet Details
Figure 2-36 TA-63 TWF Security Features
Figure 2-37 Electrical Site Plan
Figure 2-38 Lightning Protection and Lighting Pole Foundation and Grounding Details
Figure 2-39 TA-63 TWF Evacuation Routes and Muster Area TA-63
Figure 2-40 TA-63 TWF Technical Area Boundary and 15-Meter Buffer for Ignitable, Reactive, and Incompatible Waste Storage
Figure 3-1 Map of LANL Showing Major Roads
Figure 3-2 Traffic Routes in the Vicinity of TA-63
Figure 3-3 Access Roads and Traffic Control Signs in the Vicinity of the TA-63 TWF Unit
Figure 3-4 Surface Water and Floodplain Map
Figure 3-5 Wind Roses
Figure 3-6 National Pollutant Discharge Elimination System (NPDES) Outfall Sites
Figure 3-7 Storm and Sewer Systems at TA-63 TWF Unit
Figure 3-8 Natural Surface Drainage
Figure 3-9 Fire Stations
Figure 3-10 Wells, Springs and Surface Water Sampling Sites near TA-63
Figure 3-11 Wells and Boreholes within 1-mile Radius of TA-63
Figure 4-1 Location of TA-63 Solid Waste Management Units (SWMUs)

List of Attachments

Attachment A	Part A Form
Attachment B	Floor Coatings
Attachment C	Container Vents
Attachment D	Seismic Report
Attachment E	Isco™ Water Sampler
Attachment F	Closure Plan
Attachment G	Proposed Revisions to LANL Hazardous Waste Facility Permit
Attachment H	Public Comments

List of Abbreviations and Acronyms

40 CFR	Title 40, U.S. Code of Federal Regulations
ACI	American Concrete Institute
AK	Acceptable Knowledge
ALARA	As Low As Reasonably Achievable
amsl	Above mean sea level
AOC	Area of Concern
ASCE	Association of Civil Engineers
ASTM	American Society for Testing and Materials, International
BV	Background Value
CCP	Central Characterization Project
CMR	Chemical and Metallurgy Research
CSMM	Container Storage and Matrix Management
D/DE	Drum/Drum Equivalent
DOE	U.S. Department of Energy
DOT	U.S. Department of Transportation
EDS	Employee Development System
EPA	U.S. Environmental Protection Agency
FGA	Flammable Gas Analysis
HC	Hazard Category
HENC	High Efficiency Neutron Counter
HEPA	High Efficiency Particulate Air
HSG	Head Space Gas
HWB	Hazardous Waste Bureau
INEEL	Idaho National Energy and Environment Laboratory
LACCDC	Los Alamos County Consolidated Dispatch Center
LAFD	Los Alamos Fire Department
LANL	Los Alamos National Laboratory
LANS	Los Alamos National Security, LLC
MSDS	Material Safety Data Sheet
LEED	Leadership in Energy and Environment Design

NDA	Non-Destructive Assay
NDE	Non-Destructive Evaluation
NFPA	National Fire Protection Association
NRHP	National Register of Historic Places
NIOSH	National Institute of Occupational Safety and Health
NMED	New Mexico Environment Department
NMHWA	New Mexico Hazardous Waste Act
NNSA	National Nuclear Security Administration
NRC	Nuclear Regulatory Commission
OSHA	Occupational Safety and Health Administration
OJT	On the Job Training
OWB	Over-sized Waste Box
PA	Public Address
PMR	Permit Modification Request
POC	Pipe Over-pack Container
PPE	Personal protective equipment
ppmw	parts per million by weight
POV	Privately Owned Vehicle
RANT	Radioassay Non-destructive Testing (Facility)
RCRA	Resource Conservation and Recovery Act
RTR	Real Time Radiography
SLB2	Standard Large Box 2
SuperHENC	Super High Efficiency Neutron Counter
SWB	Standard Waste Box
SWEIS	Site-Wide Environmental Impact Statement
SWMU	Solid Waste Management Unit
SWSC	Sanitary Wastewater Systems Consolidation
TA	Technical Area
T&E	Threatened and Endangered
TRU	Transuranic
TWF	Transuranic Waste Facility
USFWS	U.S. Fish and Wildlife Service

VOC	Volatile Organic Compounds
WAC	Waste Acceptance Criteria
WCRRF	Waste Compaction, Reduction, and Repackaging Facility (TA-54)
WIPP	Waste Isolation Pilot Plant
WRCC	Western Regional Climate Center

1.0 INTRODUCTION

This Class 2 permit modification requests the addition of a hazardous waste management unit, the Transuranic Waste Facility (TWF), to the *Los Alamos National Laboratory Hazardous Waste Facility Permit* (November 2010), (hereinafter referred to as "the Permit"). The Permit was issued by the New Mexico Environment Department (NMED) in November, 1989 and renewed in 2010 (NMED 2010). The Los Alamos National Laboratory (LANL) Environmental Protection Agency (EPA) Identification Number is NM0890010515. The facility is owned by the National Nuclear Security Administration (NNSA) of the Department of Energy (DOE), and is operated jointly by NNSA-DOE and by Los Alamos National Security, LLC (LANS). This permit modification request has been prepared to address requirements in the New Mexico Administrative Code, Title 20, Chapter 4, Part 1 (20.4.1 NMAC), as revised October 2009, that are specific for the proposed new hazardous waste storage operations at the TWF.

The 20.4.1 NMAC adopts, with a few limited exceptions, all of the Code of Federal Regulations, Title 40, (40 CFR) Parts 260 to 266, Part 268, Part 270, and Part 273. The citations in this document reference the appropriate federal regulations because they set forth the detailed requirements for hazardous waste management units and procedures. Table 1-1 provides a list of these regulatory references and the corresponding location for the information addressed in this permit modification request.

The renewed Permit contains many of the conditions addressing the requirements of the New Mexico Hazardous Waste Act (NMHWA) and implementing regulations, specifically 40 CFR, that are common to all LANL hazardous waste management units. The relevant sections of the Permit are referenced throughout this document. Together, information provided in this document and in the Permit will meet the applicable requirements specified in 40 CFR Parts 264 and 270 for the proposed unit.

1.1 REQUEST FOR PERMIT MODIFICATION

This Class 2 permit modification request has been prepared and submitted to the NMED – Hazardous Waste Bureau (NMED-HWB) to request the addition of the proposed hazardous waste storage unit at Technical Area 63 to the Permit.

1.2 PURPOSE OF THE TRANSURANIC WASTE FACILITY

The TWF is a mission-critical component of LANL's strategic role regarding support of the DOE's Stockpile Stewardship Program which is administered by the NNSA and nuclear defense and research programs. LANL must have a continuing capability to process transuranic (TRU) waste and to ship that waste to the Waste Isolation Pilot Plant (WIPP) near Carlsbad, New Mexico. TRU waste generally contains radioactive elements heavier than uranium, i.e., those with atomic numbers greater than 92. Mixed TRU (MTRU waste) is waste that also contains a hazardous component as defined by the Resource Conservation and Recovery Act (RCRA). This is the type of waste currently stored at TA-54, Area G, in accordance with the Permit.

The signed Compliance Order on Consent (Consent Order) with the State of New Mexico of March 2005 requires that Area G be closed and remediated by December 2015. The closure of Area G will create a gap in TRU waste management capability for waste generated by LANL in

the future. LANL must develop new capabilities for storage, characterization, and intra-site shipping of TRU waste and the TRU waste storage and characterization capabilities located at Area G need to be re-established at a different site on a schedule that supports the closure. The TWF will replace the TRU waste storage and characterization capabilities currently located at Area G. The TWF provides the necessary capacity for management of newly generated TRU waste to allow the closure of Area G in a timely and integrated manner. The TWF is part of a comprehensive, long-term strategy to consolidate hazardous and radioactive waste operations into a smaller, more compact area that can operate safely, securely, and effectively for the foreseeable future.

1.3 FACILITY DESCRIPTION

The TWF will be located at TA-63 at LANL. It will be designed, permitted, constructed, and commissioned as a hazardous waste storage unit to meet the conditions of the Permit for safe storage. The TWF is designated as a DOE Hazard Category (HC)-2 nuclear facility for radioactive material management. The TWF will also be designed, constructed, and operated within the conditions described by the LANL Site-Wide Environmental Impact Statement (SWEIS) for compliance with the National Environmental Policy Act.

The TWF is intended to replace the TRU waste storage currently taking place at TA-54 Area G. It is designed to store a maximum of 105,875 gallons (1,925 55-gallon drum or drum equivalents, D/DE). In addition to drums, the unit will also store other standardized metal containers used for TRU waste management. This storage capacity is less than 2.5% of the 4,346,590 gallon (79,029 D/DE) current storage capacity at Area G as listed in Table J-1, *Active Portion of the Facility* in Attachment J, *Hazardous Waste Management Units,* of the Permit.

The TWF will include various structures for waste management activities. A concrete pad will form a base for storage and characterization buildings, characterization trailers, and a receiving area, as well as providing storm water management and spill retention. The boundaries of the pad will designate the RCRA-permitted portion of the TWF. There will be six waste storage buildings on the pad, five of which will be used only for storage of waste containers. The additional building will be used for storage and for head space gas sampling and analysis of containers. The TWF will also include characterization trailers that are needed to certify containers to the WIPP Waste Acceptance Criteria (WAC). The TWF characterization trailers will include or be functional equivalents of those currently in operation at Area G, Pad 10, as described in the Permit. A fire suppression water storage tank will be situated for emergency fire suppression activities at the storage buildings. A retention basin will be designed to capture and distribute storm and, potentially, fire suppression water from the pad. Other functions provided by the TWF include intra-site shipping and receiving of waste containers under a protective canopy, operational support facilities, and utility services.

1.4 PERMIT MODIFICATION OUTLINE

This permit modification request is organized as follows:

- Section 1.0: Includes an introduction to the permit modification request and a crosswalk of the regulatory requirements associated with the unit requesting permitting.
- Section 2.0: Includes a description of the TWF and addresses environmental performance standards, waste characterization, security, preparedness, hazards

prevention, emergency equipment, inspection requirements, and recordkeeping requirements.

- Section 3.0: Discusses general facility requirements such as traffic patterns, location information, evaluates other federal laws and other permit activities, and training specific to the TWF.
- Section 4.0: Describes two Solid Waste Management Units (SWMUs) assessed for contamination and remediation that are located near the TWF.
- Section 5.0: Includes the closure requirements and proposed closure plan for the TWF.
- Section 6.0: Contains a list of references used throughout this document.
- Section 7.0: Contains the certification statement and signatures for this permit modification request as required by 40 CFR § 270.11.

In addition, attachments included with this permit modification request provide detailed information to meet regulatory requirements. These attachments are referenced and described within the individual sections as appropriate.

Attachment G contains proposed changes to the Permit to incorporate the descriptions and site specific equipment and procedures for this unit. Additional and revised text is proposed for Permit Parts and Attachments. The Permit sections proposed for revision include:

- Part 1, *General Permit Conditions*
- Part 2, *General Facility Conditions*
- Part 3, *Storage in Containers*
- Permit Attachment A, *Technical Area (TA) – Unit Descriptions*
- Permit Attachment B, *Part A Application*
- Permit Attachment D, *General Contingency Plan*
- Permit Attachment G, *Closure Plans*
- Permit Attachment J, *Hazardous Waste Management Units*
- Permit Attachment N, *Figures.*

The proposed changes to the Permit incorporate permit conditions appropriate for the new unit as suggested by the Permittees to meet RCRA requirements for operation of the hazardous waste management unit in a manner that protects human health and the environment. Proposed changes may be subject to further revisions subject to the NMED review.

Attachment H of this permit modification request includes presentation materials for a pre-submittal, public information meeting (as required by 40 CFR § 124.32). The attachment also includes a list of attendees, and copies of written comments collected at the meeting. The meeting occurred on August 10, 2011, at Fuller Lodge in Los Alamos, New Mexico.

Design drawings are included in this permit modification request to illustrate the construction and project details proposed for the unit structures. 40 CFR §270.14(a) requires that design

drawings submitted with waste management unit applications for approval be certified by a qualified Professional Engineer. The drawings in this permit modification request have been certified by Professional Engineers registered in the state of New Mexico. These engineers were responsible for preparation of the drawings in support of the design process for the unit. Similarly, figures such as floor plans have been certified by an architect registered to practice in New Mexico.

The design drawings included with this submittal also contain the phrase "Not for Construction, Part B Permit Application," in addition to the certification. The addition of this phrase indicates the drawing revision at the time of submittal. The drawings included are complete in terms of the major components and structures for the project. However, there may be future design changes that do not affect the major elements of the project such as the addition of equipment or for changes made in response to NMED direction as a result of the permit modification review and approval process. Design drawings subject to such a potential change included in this submittal are noted with sheet number and date to provide a reference.

Design details presented herein are considered sufficient for the purposes of this permit modification request. The drawings included in this document present detailed information intended to facilitate review of the permit modification request and approval by NMED. These drawings will not be included in the final unit figures used for the Permit based on its current format. Should drawings be changed substantially subsequent to submittal of this permit modification request, supplemental information will be submitted to the NMED.

Table 1-1

Regulatory References and Corresponding Permit Modification Request Location

Regulatory Citation(s) 40 CFR	Description of Requirement	Location in this Permit Modification Request
§270.14(b)(1)	General facility description	Section 2.1,2.2
§270.14(b)(2)	Chemical and physical analyses of hazardous waste	Section 2.3.1
§270.14(b)(3)	Waste analysis plan	Section 2.3
§264.13(b)	Development and implementation of a written waste analysis plan	Section 2.3
§264.13(c)	Off-site waste analysis requirements	Section 2.3
§270.14(b)(4)	Security procedures and equipment	Section 2.4
§264.14	Security procedures and equipment	Section 2.4
§270.14(b)(5)	General inspection schedule	Section 2.9
§264.15(b)	General inspection schedule	Section 2.9
§264.174	Inspections/containers	Section 2.9
§264.195	Overfill control inspections	NA
§264.226	Surface impoundment monitoring and inspection	NA
§264.254	Waste pile monitoring and inspection	NA
§264.273	Land treatment and operating requirements	NA
§264.303	Landfill monitoring and inspection	NA
§264.1033	Process vent standards	NA
§264.1052	Equipment leak air emission standards	NA
§264.1053	Compressor standards	NA

§264.1058	Standards for pumps, valves, pressure relief devices, flanges, and connections	NA
§270.14(b)(6)	Request for waiver from preparedness and prevention requirements of 264 Subpart C	NA
§264.30-37	Preparedness and prevention: applicability, design and operation, required equipment, testing and maintenance of equipment, access to communications or alarm systems, required aisle space, and arrangements with local authorities	Section 2.6 and 2.7
§264.227	Surface impoundment emergency repairs	NA
§270.14(b)(7)	Contingency Plan	Section 2.7
§264.50-56	Contingency plan and emergency procedures: applicability, purpose/implementation of contingency plan, content of contingency plan, copies of contingency plan, amendment to contingency, emergency coordinator, and emergency procedures	Section 2.7
§270.14(b)(8)	Description of preparedness and prevention	Section 2.6, 2.7
§270.14(b)(8)(i)	Hazard prevention in unloading operations	Section 2.5.3
§270.14(b)(8)(ii)	Runoff prevention	Section 2.5.4
§270.14(b)(8)(iii)	Prevent contamination of water supplies	Section 2.5.5
§270.14(b)(8)(iv)	Mitigation of equipment failure and power outages	Section 2.5.6
§270.14(b)(8)(v)	Prevention of undue exposure of personnel to hazardous waste	Section 2.5.7
§270.14(b)(8)(vi)	Prevention of releases to the atmosphere	Section 2.5.8, 2.5.9
270.14(b)(9)	Prevention of accidental ignition or reaction of ignitable, reactive, or incompatible wastes	Section 2.8

§264.17	Procedures to prevent accidental ignition, reaction of ignitables, reaction of reactives, reaction of incompatibles, and documentation of compliance with 40 CFR §264.17 (general requirements for ignitable, reactive, or incompatible wastes)	Section 2.8
§270.14(b)(10)	Traffic pattern: volume, controls, and access	Section 3.1
§264.18(a)	Seismic considerations	Section 3.2.1
§270.14(b)(11)	Facility/unit identification and location information	Section 3.2
§270.14(b)(11)(i)	Seismic standard applicability [40 CFR §264.18(a)]	Section 3.2.1
§270.14(b)(11)(ii)	Seismic standard requirements	Section 3.2.1
§270.14(b)(11)(ii)(A)	No fault within 3,000 feet (ft) with displacement in Holocene time	Section 3.2.1
§270.14(b)(11)(ii)(B)	If faults which have displacement in Holocene time are present within 3,000 ft, no faults pass within 200 ft of portions of the facility where treatment, storage, or disposal will be conducted	Section 3.2.1, Attachment D
§270.14(b)(11)(iii)	100-year floodplain standard	Section 3.2.2, Fig 3-4
§270.14(b)(11)(iv)(A-C)	Facilities located within the 100-year floodplain	NA
§270.14(b)(11)(v)	Compliance schedule for 40 CFR §264.18(b)	NA
§270.14(b)(12)	Personnel training program	Section 3.7
§270.14(b)(13)	Closure and post-closure plans	Section 5.0, Attachment F
§264, Subpart G	Closure and post-closure	Section 5.0, Attachment F
§264.178	Closure/containers	Section 5.0, Attachment F
§264.197	Closure and post-closure care/tanks	NA

§264.228	Surface impoundments	NA
§264.258	Waste piles	NA
§264.280	Land treatment	NA
§264.310	Landfills	NA
§264.351	Incinerators	NA
§264.603	Requirements by the Secretary	NA
§270.14(b)(14)	Deed restrictions/post-closure notices (40 CFR §264.119)	NA
§270.14(b)(15)	Closure cost estimate (40 CFR §264.142)	NA, Section 5.1
§270.14(b)(16)	Post-closure cost estimate (40 CFR §264.144)	NA, Section 5.1
§270.14(b)(17)	Liability insurance (40 CFR §264.147)	NA, Section 5.1
§270.14(b)(18)	Proof of financial coverage (40 CFR §264.149-150)	NA, Section 5.1
§270.14(b)(19)	Topographic map requirements	Section 3.3
§270.14(b)(19)(i)	Map scale and date	Section 3.3
§270.14(b)(19)(ii)	100-year floodplain area	Section 3.2.2, Figure 3-4
§270.14(b)(19)(iii)	Surface waters	Section 3.3, Fig 3-4
§270.14(b)(19)(iv)	Surrounding land uses	Section 3.3, Fig 2-2
§270.14(b)(19)(v)	Wind rose	Section 3.3, Fig 3-5
§270.14(b)(19)(vi)	Map orientation	Section 3.3
§270.14(b)(19)(vii)	Legal boundaries	Section 3.3, Fig 2-3
§270.14(b)(19)(viii)	Access control	Section 3.3, Fig 3-3
§270.14(b)(19)(ix)	Wells	Section 3.3, Fig 3-10
§270.14(b)(19)(x)	Buildings	Section 3.3, Fig 2-4

§270.14(b)(19)(xi)	Drainage barriers or flood control	Section 3.3, Fig 2-5, 2-34, and 2-35
§270.14(b)(19)(xii)	Location of operational units	Section 2.2, Fig 2-5
§270.3(b)(20)	Other federal laws	Section 3.5
§270.3(a)	Wild and Scenic Rivers Act	Section 3.5
§270.3(b)	National Historic Preservation Act	Section 3.5
§270.3(c)	Endangered Species Act	Section 3.5
§270.3(d)	Coastal Zone Management	Section 3.5
§270.3(e)	Fish and Wildlife Coordination Act	Section 3.5
§270.3(f)	Executive Orders	Section 3.5
§270.14(b)(21)	Notice of extension approval for land disposal facilities	NA
§270.14(c)	Groundwater monitoring requirements	NA, Section 3.4
§270.14(c)(3)	Topographic map with points of compliance	NA
§270.14(c)(3)	Proposed location of groundwater monitoring wells	NA
§270.14(c)(4)	Description of plume of contamination that has entered the groundwater from a regulated unit at the time the application was submitted	NA
§270.14(c)(4)(i)	Extent of plume indicated on topographic map	NA
§270.14(c)(4)(ii)	Identification of constituents and concentration	NA
§270.14(c)(5)	Detailed plan and engineering report describing proposed groundwater monitoring program	NA
§270.14(c)(6)	If no release detected at date of submitted, then submit following	NA
§270.14(c)(6)(i)	List of proposed indicator parameters, waste constituents, and reaction products	NA

§270.14(c)(16)(ii)	Proposed groundwater monitoring system	NA
§270.14(c)(16)(iii)	Background values for each proposed monitoring parameter	NA
§270.14(c)(16)(iv)	Description of proposed sampling, analysis, and statistic comparisons to be used	NA
§270.14(c)(7)	If a release is detected at the point of compliance, then corrective actions	NA
§270.14(d)	Information requirements for SWMUs	Section 4
§270.14(d)(1)(i)	Location of SWMUs on topographic map	Section 4
§270.14(d)(1)(ii)	Types of SWMUs	Section 4
§270.14(d)(1)(iii)	Dimensions and descriptions of SWMUs	Section 4
§270.14(d)(1)(iv)	Dates of SWMU operations	Section 4
§270.14(d)(1)(v)	Waste types managed at SWMUs	Section 4
§270.14(d)(2)	Information on releases from SWMUs	Section 4
§270.14(d)(3)	RCRA Facility Assessment sampling and analysis results	NA
§270.15	Information requirements for containers	Section 2.5

2.0 TA-63 TWF UNIT ACTIVITIES

In accordance with 40 CFR § 270.14(b), this section of the permit modification request provides a general description of LANL and a specific description of the TA-63 TWF hazardous waste management unit proposed for approval. The description of the unit includes the waste accepted at the unit, the waste storage activities, how access to the unit is controlled, and preparedness and prevention measures, including hazards prevention. This section also describes the contingency (emergency) plan; containment systems; the management of ignitable, reactive, and incompatible wastes; and inspection and recordkeeping requirements at the unit.

2.1 LANL FACILITY DESCRIPTION

LANL is located in Los Alamos County, an incorporated county, in north-central New Mexico, approximately 60 miles north-northeast of Albuquerque and 25 miles northwest of Santa Fe. The regional location of LANL is shown on Figure 2-1. LANL is divided into TAs, as shown on Figure 2-2 and occupies an area of approximately 39 square miles. LANL and the residential and commercial areas of Los Alamos County, which occupy a combined area of approximately 109 square miles, are situated on the Pajarito Plateau. The plateau consists of a series of finger-like mesas separated by deep east-west trending canyons. Ephemeral, interrupted, or intermittent streams lie at the bottoms of all the canyons. The mesa tops range in elevation from approximately 7,800 feet (ft) above mean sea level (amsl) at the flank of the Jemez Mountains, located to the west of Los Alamos, to about 6,200 ft amsl at their eastern extent, where they terminate above the Rio Grande.

Land use in the LANL region is linked to the economy of northern New Mexico, which depends heavily on tourism, recreation, agriculture, and Federal and state government employment for its economic base. Area communities generally are small and primarily support urban uses including residential, commercial, light industrial and recreational facilities. These include the DOE, the U.S. Forest Service, Native American communities, the U.S. National Park Service, the County of Los Alamos, private land-owners, the State of New Mexico, and the Bureau of Land Management. The Native American communities in the region include the Pueblo of San Ildefonso on LANL's eastern border and six other Pueblos located nearby. Entities that serve as land stewards and determine land uses within the LANL region are depicted in Figure 2-2.

LANL's central mission is the reduction of global nuclear danger supported by research that also contributes to conventional defense, civilian, and industrial needs. This includes programs in nuclear, medium energy, and space physics; hydrodynamics; conventional explosives; chemistry; metallurgy; radiochemistry; space nuclear systems; controlled thermonuclear fusion; laser research; environmental technology; geothermal, solar, and fossil energy research; nuclear safeguards; biomedicine; health and biotechnology; and industrial partnerships. LANL is owned by the DOE and is operated jointly by the DOE NNSA and the LANS. The facility mailing address is P.O. Box 1663, Los Alamos, New Mexico, 87545.

LANL is an existing RCRA treatment and storage facility whose waste management activities are approved through the Permit. The Permit includes treatment and storage units that are current or proposed "active" operating units. This permit modification request is submitted for the addition of the TWF to the Permit as a waste storage unit. Further details regarding the

hazardous waste management units and waste types are included in the Permit and the revised Part A Permit Application included as Attachment A of this submittal.

2.2 TA-63 TWF UNIT

The following section generally describes the proposed TWF unit with detailed descriptions of the unit's structures in the subsections. The TWF will consist of one waste management unit that will provide storage in containers for TRU waste, including the hazardous component of MTRU waste and, potentially, mixed low-level waste streams. The TWF may also manage hazardous-only waste streams generated on site. The information provided in this section is submitted to address the applicable container storage requirements of 40 CFR §270.15 and Part 264, Subpart I.

The TWF will be located at TA-63 on a mesa between a branch of Mortandad Canyon on the north and Pajarito Canyon on the south in the north central portion of LANL (see Figure 2-3 for the location of TA-63 at LANL). The unit will be built at the intersection of Pajarito Road and Puye Road, within the triangle formed by Building 63-111 to the east, Puye Road to the north, and Pajarito Road to the southwest. Figure 2-4 depicts this location with respect to nearby buildings and facilities. The closest buildings are shops immediately north of Puye Road, Office Building 63-111, records storage buildings immediately east of the TWF location, and buildings and structures on Pecos Drive further north of the TWF. A concrete batch plant and staging area will be required and located south-east of the TWF during the future construction activities for the Chemistry and Metallurgy Research Replacement Project at TA-55.

The primary purpose of the TWF is two-fold: first, safe indoor storage of TRU waste newly generated by LANL operations. Second, waste containers stored at the TWF will be subject to characterization including review of generator documentation, gas sampling, and non-intrusive radioassay. The overall process of waste characterization at LANL is described in Attachment C, *Waste Analysis Plan*, of the Permit.

Waste will be contact handled (CH) TRU waste; no remote-handled TRU waste will be stored at the TWF. Some TRU waste containers may be determined through final waste characterization not to meet the WIPP requirements for TRU waste. Depending on the presence of hazardous constituents, these waste containers will be reclassified as either low-level radioactive waste or mixed low-level waste and stored at the TWF until they are dispositioned appropriately.

Waste shipments will be made from the LANL waste generating facilities to the TWF for storage and then to the RCRA permitted Radioactive Assay and Nondestructive Testing (RANT) Facility at TA-54-38 West. The RANT Facility is used to load the TRU waste containers into TRUPACTs (steel shipment containers) required for off-site shipment to the WIPP. Waste shipments may also occur from TWF to the RCRA permitted TA-50-69 Waste Characterization, Reduction, and Repackaging Facility (WCRRF) if repackaging of the containers is necessary.

The TWF will be approximately 28,100sf (square feet). The layout of the unit is depicted in Figure 2-5 with the location of areas where storage will occur highlighted. The main structure for the unit will be the concrete pad providing a physical base an operational boundary for the six waste storage buildings, several waste characterization trailers, outside storage of waste containers too large for the buildings, and the loading/unloading canopy. The pad will be surrounded by a security fence that will define the waste storage portions of the unit. One of the storage buildings will be used for the storage of large waste containers such as the Standard

Waste Box (SWB) or Standard Large Box 2 (SLB2) and for head space gas sampling and analysis.

To provide containment for the unit, a retention basin is designed to capture and distribute storm water at the TWF. It will also retain fire suppression water in the event of a fire. An automated water sampler will collect and preserve grab samples as storm water flows into the basin. Water will be released via a manual valve providing control of the flow rate from the basin. Should a fire occur, water collected will be analyzed for contaminants prior to discharge.

The unit will also include a small storage building for calibration sources used for waste characterization activities, a covered forklift charging station, and equipment storage shed. Outside the fence, other site structures include an operations support building and a fire water storage tank and associated utility building.

2.2.1 Concrete Pad

The TWF concrete pad will be of reinforced concrete construction, on grade to provide support for the site structures and vehicle movement. The concrete pad will also provide for low combustible loading between the buildings and for the site. The pad will be laid on a graded soil and gravel base course and be nominally 8 inches thick. The existing ground at the site slopes from the northwest to the southeast. There is a significant grade difference from the northwest corner to the southwest corner of the site. After the site has been graded, portions will be lower in elevation than Pajarito Road or Puye Road. Given the elevation difference on the site, retaining walls will be constructed along the northwest portion of the site. The pad will be sloped at approximately 2% to provide for storm water and fire suppression water drainage.

The perimeter of the pad will have a 24” gutter and 6” high curb to provide run-off control. A valley gutter isolates the northern portion of the pad. Storm water and potentially contaminated firewater run-off (in the event of a fire in the storage buildings) from the northern portion of the pad flows to the valley gutter then will be channeled to the retention basin, thus, providing containment for the site. This is a feature that negates the need for berms, dikes, or sumps around each storage building. The southern portion of the unit (where waste is not stored) slopes southeast providing drainage off the pad toward the parking lot. Refer to Figure 2-5 for further details regarding the pad configuration.

2.2.2 Storage Buildings

The TWF will include six storage buildings, five of which will be functionally identical and are described in this section. The additional storage building with other design elements is described in section 2.2.3. The five buildings will measure 33 x 64 ft or approximately 2112 square feet, and will be 15 ft high. The storage buildings provide safe covered storage for LANL generated TRU waste containers through weather protection, physical security, and DOE design requirements for safety at nuclear facilities. Multiple buildings are being proposed to minimize the radioactive material content at individual storage buildings and to reduce the potential impact from accidents relative to a single larger building. Multiple smaller buildings will also reduce overall risk associated with events such as vehicle impact or fire. The storage building floor plan is presented in Figure 2-6. These five storage buildings will be designated 63-0149, 63-0150, 63-0151, 63-0152, and 63-0153.

Containers loaded onto pallets will be stored on a reinforced concrete floor. The building floor

(i.e., mat slab) will be higher than the concrete pad to prevent run-on, and will be sloped towards a roll-up door at the building entrance for drainage in the event of a fire.

The concrete floors will be coated to provide a sealed surface and chemical resistance although secondary containment pallets will be used to meet the containment requirements of the Permit for potential liquid containing waste in the storage buildings. The floor coating standards include:

- Minimum Class B per National Fire Protection Association (NFPA);
- Radiation resistant as determined by American Society for Testing and Materials, International specification ASTM D 4082; and
- Decontaminable to at least 95 percent of total activity removed and certified for Nuclear Coating Service level II.

Further details for the floor coating are provided in Attachment B.

The storage buildings will be contructed as covered single-story structural steel frames. Each of the storage buildings and its structural members are designed to exceed the snow load for roof design, the design wind force for buildings, and the seismic loading for structural components, as described in American Society of Civil Engineers specification ASCE 7-05, *Minimum Design Loads for Buildings and Other Structures.* (LANL, 2011). The steel frame is an ordinary moment frame with joists to attach roof panels and girts to attach wall panels. The walls of the facility will be rigid to provide protection from the elements and external forces. Gypsum board on light gauge metal studs with industrial coating will finish the interior walls. The roof is a high quality metal standing seam. Batt insulation in the ceiling and on the inside of the walls will reduce heat loss and gain inside the buildings. Electric heaters will heat the interior to prevent fire suppression systems and eyewash stations from freezing. Cooling will be provided by venting fans. In order to drain the building in the event of a fire, the floors will be constructed to provide a shallow slope (1/8 inch to 1 foot) from the back end of the building towards the front, and then out the roll-up door opening and a loading ramp to the concrete pad outside the building.

The following drawings illustrate additional design details for the storage buildings:

- Figure 2-7 shows the building foundation plan with dimensions and locations for beam supports.
- Figures 2-8 and 2-9 include support details for the building framework.
- Figure 2-10 shows structural sections for the storage buildings.
- Figure 2-11 provides thickness details of the slab and beam supports.
- Figure 2-12 shows the constructed building elevations.
- Figures 2-13 and 2-14 provide details regarding the buildings' fire protection sprinkler system including sprinkler locations and the water supply system.
- Figure 2-15 provides specifications for the buildings' emergency eyewash and shower equipment (locations in Figure 2-7).

2.2.3 Storage and Characterization Building

The sixth storage building is divided into a storage area, a room for the thermal equilibrium of containers to prepare for head space gas sampling, and additional support and analytical equipment rooms. The storage area in this building will be used for a variety of containers including SWBs and SLB2s. In order to accurately analyze headspace gas, the container temperature must be allowed to equilibrate to a minimum of 64 degrees Fahrenheit for 72 hours, as described in the Central Characterization Project procedure: CCP-TP-093*, CCP Sampling of TRU Waste Container,* (CCP, 2010). Sampling equipment is available for obtaining headspace gas samples and flammable gas samples from waste containers. Gas chromatography and mass spectrometry on the flammable gas sample will occur in an adjacent room.

The floor plan of the building measures 80 x 33 ft or approximately 2640 square ft, and is 15 ft high. Figure 2-16 shows the floor plan of the storage building. The building will otherwise be constructed to the same standards as the other storage buildings. The building will be numbered 63-0154.

Additional facility drawings with design details for the Storage and Characterization Building are included as follows:

- Figure 2-15 provides eyewash/safety shower details (specifications are the same as Storage Buildings, shown in Figure 2-15).
- Figure 2-17 shows the building foundation plan with dimensions and locations for beam supports.
- Figures 2-18 and 2-19 provide building structural elevations including support details for the building framework.
- Figure 2-20 includes structural section construction details.
- Figure 2-21 includes foundation construction details.
- Figure 2-22 shows constructed building elevations.
- Figure 2-23 provides building section details.
- Figure 2-24 and 2-25 show the fire protection plan and its associated piping & instrumentation diagram.

2.2.4 Characterization Trailers

The TWF facility will include pads with utility hook-ups for the characterization trailers used to certify containers to DOE/WIPP-02-3122, *Transuranic Waste Acceptance Criteria (WAC) for the Waste Isolation Pilot Plant,* (WIPP, 2010). The non-destructive evaluation (NDE) and non-destructive assay (NDA) equipment will be provided for the TWF in mobile modified commercial trailers brought to the facility. These trailers are in use and functional at other DOE waste characterization sites. These trailers are currently providing this function for TRU waste management at the TA-54, Area G, Pad 10 permitted hazardous waste unit and will be moved to

the TWF when it becomes operational. Radiographic assay equipment used for characterization is housed in these trailers as follows:

- Real Time Radiography (RTR) unit. The assay equipment in the trailer is designed to provide X-ray examination of the contents of TRU waste drums. This trailer is currently designated as TA-54-0497 in use at Area G.
- High-Efficiency Neutron Counter (HENC) unit. The assay equipment in the trailer is designed to provide a passive neutron and gamma measurement of 55-gallon TRU waste drums. This trailer is currently designated as TA-54-0498 in use at Area G.
- SuperHENC unit. The assay equipment in the trailer is similar to the HENC but includes a high efficiency neutron counter and a gamma counter that are both designed to handle SWBs. This trailer is currently designated as TA-54-0457 in use at Area G.

The RTR is a self-contained, non-intrusive X-ray unit, physically housed in a mobile container 48 feet in length by 8 feet wide used to X-ray waste containers up to 85 gallons in volume. Radiography is a nondestructive qualitative and semi-quantitative technique that involves X-ray scanning of waste containers to identify and verify waste container contents. Radiography is used to examine the waste container to verify its physical form. This technique can detect prohibited items such as liquid wastes and gas cylinders, which are prohibited for WIPP disposal. Radiography examination must achieve the following to meet the WIPP criteria:

- Verify and document the physical form of each waste container.
- Identify any prohibited waste in the waste container.
- Confirm that the physical form of the waste matches its waste stream description (i.e., homogeneous solids, soil/gravel, or debris waste [including uncategorized metals]).

The HENC is a self-contained, non-intrusive, passive assay unit, physically housed in a mobile assay container 48 feet in length by 8 ½ feet wide by 12 ¾ feet high. The HENC is designed to assay 55-gallon (208 liter) drums containing fissionable radionuclides. The system simultaneously performs passive neutron counts and gamma spectrometry to detect gamma-emitting radionuclides for the purpose of determining quantitative concentrations of TRU constituents. The equipment and mobile container only require electrical power to operate. Approximately 10 to 13 drums a day can be processed through the HENC, with each drum taking approximately 45 minutes for examination. The HENC is a large rectangular-shaped neutron counter that is specifically designed to assay the container in a fixed geometry. The HENC system uses passive and add-a-source neutron analysis methods to assay the nuclide mass contained in 55-gal drums of TRU waste. Waste drums to be assayed are placed on a conveyor that feeds drums into the system.

The SuperHENC operates on the same principle as the HENC, within a similar tractor trailer. The process however, is applicable to the assay of TRU radionuclides in waste packages such as SWBs and SLB2's. Data from this process is used to assay the radioactive content of SWBs containing TRU waste, sorting SWBs based on the 100 nanocurie per gram (nCi/g) TRU limit, and confirming radioisotopes indentified via acceptable knowledge (AK).

The trailers will be numbered 63-0155, 63-0156, and 63-0157 at TA-63. Additional trailers may be needed as characterization needs for the facility change. In the event that trailers are added or moved at the unit, the permit modification procedures in Permit Section 3.1.(3) will be followed.

2.2.5 Loading/Unloading Canopy

The canopy, designated Building 63-0145, will be used for the shipping and receiving of TRU waste containers. The covered area of the canopy is approximately 48 ft by 60 ft and is large enough to conduct operations out of the weather. The roof will be pitched west to east and will not drain to the concrete pad. Waste transportation trucks entering the controlled area of the TWF through the access gates on the east side will park beneath the canopy for both loading and unloading operations. A bump out is provided in the driveway to allow forklift access to both sides and rear of the truck. The canopy will support a photovoltaic array to provide a source of renewable energy to meet Leadership in Energy and Environmental Design (LEED) requirements.

Design details for the canopy are found in drawings included in this request:

- Figure 2-26 shows the canopy floor plan.
- Figure 2-27 includes the canopy structural sections.
- Figure 2-28 provides canopy foundation details.
- Figure 2-29 shows the constructed canopy elevations.
- Figure 2-30 provides canopy building sections.
- Figure 2-31 shows details regarding the canopy fire suppression sprinkler system including sprinkler locations and the water supply system.

2.2.6 Retention Basin

The storage buildings and characterization trailers are located within the northern portion of the site. The retention basin is located south of the storage buildings and characterization trailers along the western edge of the site. The retention basin is designed to collect water from this area in two types of events. Primarily, surface storm water or melt water run-off from the concrete pavement in this area is directed to the retention basin via the slope (nominally 2%) of the concrete pad. A valley gutter also helps to channel water from the east side of the concrete pad to the retention basin. Secondly, in the event of a fire at the unit, fire suppression water will potentially flow out of the storage buildings or from other unit structures to the concrete pad and then to the retention basin.

The designed volume capacity for the retention basin includes the potential for a combination of both events. This includes run-off from a projected 25 year frequency and 2 hour duration precipitation event (1.94 inches of precipitation resulting in approximately 85,900 gallons (11,500 cubic ft.) from 1.63 acres). For a fire suppression event, an estimate of suppression water needed is calculated from NFPA 13 factors (380 gpm for 30 min. of sprinkler demand and 500 gpm for 30 min. fire hose stream allowance), for a total of approximately 26,400 gallons (3,530 cubic ft.). Volume from both events results in a total capacity of approximately 112,300 gallons (approximately 15,000 cubic ft.). The designed total retention basin volume also

includes 0.5 ft of freeboard, resulting in a total capacity of 137,450 gallons (18,375 cubic ft.). Final dimensions of the basin will be 125 ft by 42 ft by 3.5 ft deep. Facility drawings for the retention basin foundation plan and foundation details are included as Figure 2-32 and Figure 2-33of this permit modification request.

The retention basin will be drained as needed via a manual release valve that is normally in the closed position. The retention basin will also be equipped with an Isco™ 6712 FR automated storm water sampling station or an equivalent sampler. Product specifications for the sampler are included in Attachment E of this submittal. In normal storm water events the manual drain valve will be opened and the collected storm water will be released through a pipeline at the calculated predevelopment flow rate (i.e., the rate of storm water runoff from the site prior to construction of the facility) after the opening of the valve. The released storm water will drain through the pipe line to a release site on the east side of the TWF and then to other stormwater retention structures developed for the aggregate area to be defined and included in the TA-63 TWF Multi Sector General Permit Storm Water Plan to be developed for the site. See Figure 2-34 for details concerning the storm drain plan and Figure 2-35 for construction details of the storm drain inlet.

In the event of a fire at the TWF, the retention basin will serve the critical function of collecting the fire suppression water in the basin. The slope of the unit's concrete pad and the valley gutter serve to ensure that any water draining from the unit's storage buildings or the characterization trailers will be routed to the retention basin. This key design feature provides containment of possible contamination and a backup option for any emergency management activities. In such an event, collected water will remain in the basin until sampling and water-quality analysis can be performed to determine whether or not the water is contaminated. Upon completion of sampling and analysis, the water will be managed accordingly. In the event of such a fire or release, any further decontamination of the retention basin will be subject to the provisions of Attachment D, *Contingency Plan*, of the Permit.

2.2.7 Other Project Structures

Other project structures are present at the TWF to provide support for the hazardous waste management activities at the unit. These structures are either outside the boundary of the hazardous waste management unit or do not directly store or manage hazardous waste.

The Operations Support Building provides offices and services for operations personnel and management. Personnel are housed in the separate building to ensure that radiological exposures are as low as reasonably achievable (ALARA) by increasing distance from the waste management activities. The Operations Support Building is approximately 75 ft by 80 ft. Operations and characterization personnel will be housed in this building, although it will not be occupied continuously. However, it will provide storage of waste container data and monitoring of key operational parameters and specific safety structure, system, and component (SSC) status. In addition, a public address system will be powered from this building to facilitate emergency response. The building will include offices, conference rooms, restrooms, change rooms, site security access, and circulation space for about 25 workers. The building will be outside the security control fence; windows provide visual observation of the control area. The building will

use an ordinary steel moment frame and include nonload bearing metal panel walls. The exterior finish will be metal sandwich insulating panels. The roof will be a low slope membrane-type with high solar reflectance and roof and overflow drains. The floor will be reinforced concrete slab on grade and finished concrete in some areas.

Access to the waste management site is via a gated driveway east of the concrete pad. Gates are normally closed and vehicle access to the controlled area within the unit fence line requires check-in at the Operations Support Building. Pedestrian access to the controlled area also requires check-in through the Operations Support Building. Parking for site workers and visitors is provided south of the Operations Support Building and outside the controlled area fence.

Located to the north of the Operations Support Building, on the project site but outside the controlled area fence, is a dedicated fire water supply tank and utility building. The utility building is adjacent to the water tank that supplies water for the fire suppression system. This building will house two fire water pumps and instrumentation needed to ensure operation of the fire suppression system. The back-up pump is diesel powered. Access into the fenced unit will not be required for filling the diesel pump fuel tank as fueling can occur from the roadway.

Further to the north, across the access driveway is an existing groundwater monitoring well. The monitoring well is R-46, part of the LANL groundwater monitoring network. The TWF controlled area fence line is located to the west of the monitoring well. Space has been allocated to allow for routine and upset condition access to the monitoring well. Access to the TWF is not required for activities associated with the monitoring well.

A forklift charging station is located to the west of the canopy along the western edge of the site. This structure will be an open roofed shed with storage areas for the forklifts and charging equipment.

There will be an equipment storage shed on the west side of the unit. This shed will be a light warehouse of 1250-sfand will be used to store items such as metal pallets, containers used to over-pack waste containers if necessary, and snow removal equipment. The building will be 25 ft x 50 ft x 15 ft high. The sides of the shed will be closed with a rollup (garage-type door) in addition to a personnel access/egress door. There will be no fire protection in this building.

The characterization process will require sealed radioactive sources for calibration of RTR and HENC sensors. A separate building designated the Characterization Source and Matrix Management (CSMM) Building will house sealed sources.

2.2.8 Waste Management Practices

The primary function of the TWF is to safely receive, inspect, handle, characterize, certify, store, and ship newly generated TRU waste containers to other LANL facilities for additional waste management activities or for off-site disposition. Storage at the TWF will be predominantly for waste in solid form and may include both TRU (radioactive only) or MTRU (radioactive and hazardous component) waste. Bulk liquid wastes will not be accepted at the TWF but the potential exists that a small quantity of free liquid may be present in some containers (e.g., TRU waste determined to contain liquids such as condensation or phase separation by RTR characterization after waste receipt). Other types of mixed waste (e.g., TRU waste reclassified as low level waste through the NDE/NDA in the HENC or Super HENC) or hazardous only waste (e.g., from on-site waste generation such as empty paint cans or forklift maintenance) may also

be managed at the TWF while waiting for further appropriate waste management. Wastes excluded by the LANL TRU WAC will not be accepted at the TWF, including medical, infectious, explosive or compressed gas wastes.

TWF waste management activities will occur in four areas: the loading/unloading canopy, the waste storage buildings, the characterization trailers, and outside storage on the concrete pad. The main storage function at the unit will occur in the waste storage buildings. Outside storage will be used for occasional storage of large containers pending further action such as re-packaging at one of LANL's other TRU facilities. Temporary waste staging will also occur at the characterization trailers during waste analysis and at the loading/unloading canopy during receipt of the waste containers.

2.2.8.1 Loading and Unloading

The loading/unloading canopy will be used for receipt of TRU waste from LANL generators and for re-shipment of waste to the TA-54-38 RANT Facility or TA-50-69 WCRRF. Waste containers will be transported to the TWF by truck and enter from the north gate on the east side. The containers will be unloaded from the trucks under the canopy. Containers will be unloaded with electric forklifts used exclusively at the TWF to reduce potential ignition sources. Waste containers may include: 55 or 85 gal metal drums, SWBs, SLB2s, Pipe Over-pack Containers (POCs) inside 55 gallon drums, and over-sized waste boxes (OWBs). Further descriptions of these containers are included in Table 2-1. With the exception of the OWBs, all containers will be both WIPP-compliant [DOE/WIPP 2008] and DOT 7A, Type A certified, as described in Section 3.3, *Acceptable Storage Containers,* of the Permit.

Containers may be staged at the canopy for a short period after unloading, anticipated to be less than 1 day under normal circumstances. Only closed and vented containers will be handled at the TWF. Waste containers will not be opened at the unit although their filter vents may be replaced if necessary. All containers received at the TWF will be equipped with WIPP-approved filtered vents that contain a sample port for headspace gas/flammable gas sampling without removing the filter. The TRU waste containers provide a confinement barrier between radiological contaminants and the environment and operations personnel. As a result of this confinement capability, the containers can be safely staged temporarily outside after unloading.

While the containers are staged under the canopy, the following receiving operations will occur: initial inspection, verification of the container identification (scanning the container identification barcode and checking labels), wiping container surfaces, visual inspection of the filter vent, and a radiation/contamination survey (validation of generator's measurements). In the event of an abnormal condition such as inclement weather, staging under the canopy may exceed 24 hours but removal of the containers to storage will occur as quickly as possible.

2.2.8.2 Storage

After receiving activities are complete, waste containers will be transported across the TWF concrete pad using forklifts. Containers will be taken to the waste storage buildings and prepared for storage. In the buildings, drums will be placed on metal pallets in groups of four followed by banding with metal strapping. The four-pack is then placed into a storage array

within the building, where it awaits further handling such as for transportation to the characterization trailers. The SWBs, SLB2s, and OWBs will also be taken into the storage buildings. Boxes without built-in devices that prevent contact with the floor will be placed on appropriately sized pallets or other structures to allow inspection and preclude contact with liquids as required by Permit Section 3.7, *Containment Systems*.

Maximum storage capacity for each building will be the equivalent of 240 55-gallon drums or a total of 13,200 gallons. The typical storage configuration consists of two rows of drums or other containers in each building separated by a fifteen foot aisle as illustrated in Figure 2-7. The central aisle allows for the movement of forklifts during waste placement. In addition to the center aisle, a minimum of a two feet wide aisle space will be maintained between the rows of waste containers and the storage building walls. Four-packs of drums may be stored up to three high pursuant to the conditions of Permit Section 3.5.1, *Storage Configuration and Minimum Aisle Space* SWB's and SLB2's may be stacked 2 high, and OWB containers will be stored one-high indoors.

There may be a need to store containers in different configurations at times to allow assembling of waste for retrieval and transport, waste characterization campaigns, or for segregation of incompatible wastes. Aisle spacing of at least two feet will be maintained in any alternate configuration as required by Permit Section 3.5.1 (1) and the maximum capacity of the storage building will not be exceeded.

2.2.8.3 Characterization

TRU waste containers stored at the TWF will be initially characterized using generator knowledge of the waste prior to being received. Newly-generated TRU waste containers are primarily characterized by AK and may go through a certified visual examination (VE) process at the waste generator location (e.g., TA-55) before being transported to the TWF. Container integrity inspection, weighing, and labeling also occur at the generator facility. Additional characterization procedures at the TWF will be used to verify the generator's waste information and certify that the waste containers are ready for shipment to WIPP as required by Permit Section C.3.2.3, *WIPP Characterization*. Characterization activities will be performed at the TWF in the characterization trailers and the Storage and Characterization Building as described below.

Waste containers will be transported to the trailers by forklifts from the storage buildings. Each of the characterization trailers includes internal and external waste handling equipment such as lifts, conveyors, and container radioassay equipment. The containers will be positioned on the trailer's conveyors. They will then be moved into the trailers' radioassay equipment and examined. After characterization, they will be removed by forklift from the trailers and put back into storage in the buildings**.**

Characterization and certification of containers for WIPP is performed at LANL by an independent WIPP contractor. Characterization and certification operations begin by:

- Verification that the containers are from a WIPP AK waste stream.

- Verifying that the containers have a legible radiological label/tag.
- Verifying that the containers have an external radiation dose equivalent rate less than 200 millirem/hour.
- Visual inspection to ensure satisfactory container integrity.
- Visual inspection to ensure use of approved filters and proper seating.
- Verification of the container gross weight.
- The containers are also labeled to record completion of all operations.

Typically, NDE is the first characterization operation performed on drums (only) following the verification steps noted above. The NDE is conducted using RTR performed at the RTR trailer. RTR confirms the waste contents identified in AK and detects free liquids or items or conditions that are prohibited at WIPP. RTR operations will be performed as required by Permit Section C.3.2.1, *Real-Time Radiography,* during storage at the TWF. RTR (at TWF) will not be necessary for newly-generated waste containers that underwent a certified VE process at the generator site but will be used for any other waste containers.

The NDA operation is conducted in the HENC trailer for drums and the SuperHENC trailer for SWBs or SLB2s. The HENC is used to detect gamma-emitting radionuclides for the purpose of determining quantitative concentration of TRU. The HENC and SuperHENC operate on the same principle, and data from this process is used to assay the radioactive content of SWBs containing TRU waste, sorting SWBs based on the 100 nanocurie per gram (nCi/g) TRU limit, and confirming radioisotopes identified via AK.

All TRU containers will be tested for the presence of excessive flammable gases using Flammable Gas Analysis (FGA). The primary concerns are hydrogen and volatile organic compounds (VOCs). The presence of levels higher than those set by WIPP will not be allowed to be transported and may indicate that the hydrogen permeability of the container's vent filters has been compromised. Documentation of the levels of concern below the limit is required for WIPP certification. Internal gases will be extracted from the containers with a syringe inserted into the sampling port of the container vent filter. The sample is analyzed for volatile organic carbon compounds (VOCs) using gas chromatography/ mass spectrometry equipment located in the Storage and Characterization Building. Levels of hydrogen and methane gases are determined with a thermal conductivity detector.

A random sample of containers from TRU waste streams composed of debris waste will require Headspace Gas (HSG) sampling and analysis. Container temperature must be constant in order to collect a valid sample. Container temperature is allowed to stabilize to achieve the minimum temperature requirements for the sampling method in the thermal equilibration (TE) room located in the Storage and Characterization Building. Sampling for FGA may also be conducted in any of the waste storage buildings or on the concrete pad next to the characterization trailers if minimum temperature requirements for sampling are met. After thermal conditioning, HSG samples are collected with a syringe assembly including an evacuated SUMMA® canister (or

equivalent) inserted into the sampling port of the vent filter. This sample is sent to the Idaho National Engineering and Environmental Laboratory (INEEL) for analysis of VOCs.

2.2.8.4 Outdoor Staging/Storage

The OWB container is too large to fit into a Nuclear Regulatory Commission (NRC) approved Type B shipping canister, and as such, will not be shipped to WIPP. OWBs will be temporarily stored at the TWF in queue for repackaging at other LANL facilities. OWB sizes vary, but will be no greater than 13 ft by 9 ft by 7 ft (on the order of a 100-drum equivalent). The radioactivity associated with these containers is relatively low compared to other containers.

OWBs may be stored in the TWF storage buildings. In the event that TWF indoor storage is approaching maximum capacity, OWBs will be stored outdoors. OWB storage will comply with the requirements of Permit Section 3.5.1.(5). OWBs stored outdoors will not be contacted by flowing storm water. Containers without stand-offs (i.e., either legs or tubing that runs either the width or length of the OWB) will be placed onto pallets. The OWBs will also be covered with tarps or other weather protective means to prevent contact with precipitation. OWBs may be stored two high outdoors on the concrete pad.

2.2.8.5 Free Liquid Restrictions

The containers to be stored at the TWF will generally contain either (1) no free liquids or (2) free liquids at less than 1% of the total container volume to meet the WIPP WAC. Any free liquid in containers at the TWF will be managed pursuant to the requirements of Permit Sections 3.6 (2) and 3.7 regarding waste labeling and containment systems. This involves the use of secondary containment pallets, maintenance of the run-on and run-off features described in Section 2.5.2 of this submittal, and removal of any spills in a timely manner as required by Permit Section 3.7.1(2).

The presence of liquid in the containers stored at the TWF is determined using either of three methods. The first method involves AK or process information supplied by the waste generators. The second method is the use of RTR to remotely examine the waste containers for liquids and other parameters. The third method for identifying free liquids is visual examination. Visual inspection if needed would necessitate opening the container and thus, would occur at other LANL storage facilities (e.g., TA-55, CMR, or TA-50-69 WCRRF). If plans are made in the future to allow the opening of containers in a suitable characterization trailer at the TWF (e.g., a visual examination trailer), this would be subject to the approval of NMED through a permit modification.

2.2.8.6 Filter Vent Changes

Vent filters that are found to be inadequate (e.g., inoperable or plugged) during container inspection or characterization will be changed out with new approved vent filters in an operation conducted using a portable HEPA filtration unit and appropriate personal protective equipment (PPE) for the operators.

2.3 AUTHORIZED WASTES AND WASTE ACCEPTANCE

The TWF will store hazardous wastes identified by one or more of the EPA Hazardous Waste Numbers presented in "Los Alamos National Laboratory General Part A Permit Application, Revision 8" included in Attachment A of this permit modification request. These waste numbers are currently associated with wastes in storage at TA-54 included in Attachment B, *Part A Application*, of the Permit. Wastes that will not be stored at the TWF are documented in the LANL TRU WAC. Excluded wastes include medical, infectious, explosive wastes, and waste containing compressed gases. No bulk liquid waste will be received at the TWF. As discussed in Section 2.2 of this document, the majority of waste stored at the TWF will be mixed TRU waste. However, the potential exists that mixed low-level waste may be stored if the TRU waste is re-characterized as a result of WIPP characterization. There may also be small quantities of nonradioactive hazardous waste generated and stored on-site.

2.3.1 Characterization Procedures

Wastes to be managed at the TWF will be subject to the characterization requirements of Permit Section 2.4, *Waste Analysis*, and Attachment C, *Waste Analysis Plan* (WAP), as applicable. A summary of the waste streams anticipated at the TWF and the applicable characterization criteria is provided in Table 2-2 of this submittal which references the relevant portions of the WAP. These requirements will be met through the routine waste characterization procedures of LANL for any hazardous or mixed low-level waste generated or stored at the unit. The waste characterization trailers on-site at the TWF will be used to provide additional waste characterization for mixed TRU waste subject to WIPP certification as described in the WAP. This includes HSG analysis at INEEL, FGA for containers at the Storage and Characterization Building, and NDA/NDE radiographic analysis in the characterization trailers as previously described.

2.3.2 Verification Frequencies

Wastes to be managed at the TWF will be subject to the waste verification requirements of Permit Section 2.4.7, *Waste Characterization Review*, and Attachment C, *Waste Analysis Plan*, of the Permit.

2.4 SECURITY AND ACCESS CONTROL

The hazardous waste management unit at the TA-63 TWF will meet the requirements of Permit Section 2.5, *Security*. The DOE provides security for the area within LANL boundaries. Guard stations will control public access to this area of LANL from Pajarito Road east and west of TA-63. Therefore, only properly identified LANL and DOE employees authorized to enter the facility or individuals under their escort will have access to the TWF.

The unit security requirement will be met because the TWF will be within a security fenced area with controlled access gates. The security fence around the waste management portion of the TWF will be at least 8 ft high and be a chain link type fence with steel pipe fence posts. Fence tops will have at least three strands of barbed wire angled away from the protected area to prevent a person from scaling the fence. Two vehicle access gates will be integrated into the fence line. These gates, when opened, shall provide at least a 16 foot wide clearance to enable vehicle access. Gates will be locked when the facility is not operational.

Controlled entry to the unit will be provided by a system of access controls (badge readers and administrative controls will be required prior to entrance) to ensure that only authorized personnel are granted access. These access controls will also ensure that all facility personnel can be identified and located in an emergency.

The TWF will be patrolled by LANL security personnel during both operational and non-operational hours to ensure that the gates are locked and that unauthorized entry does not occur. In accordance with 40 CFR §270.14(b)(19)(viii), the proposed locations of the security fences, entry gates, and entry stations are shown in Figure 2-36.

Warning signs stating "Danger – Unauthorized Personnel Keep Out," will be posted on the perimeter fences and gates. These will be able to be seen from any approach to the TWF in accordance with Permit Section 2.5.2, *Warning Signs*. The legends on the signs will be bilingual (i.e., English and Spanish) and will also indicate "No Trespassing by Order of the United States Department of Energy." The signs will be legible from a distance of 25 feet. Signs for any confined areas, if necessary, may be reduced in size, but will be legible to personnel who require access to these areas. TA-63 does not have a shared boundary with the Pueblos of San Ildefonso or Santa Clara and, therefore, the signs will not include warnings in Tewa dialects.

2.5 HAZARDS PREVENTION (PROCEDURES, STRUCTURES, AND EQUIPMENT)

Descriptions of the preventive procedures, structures, and equipment at the TA-63 TWF are presented below. This information is provided in accordance with the requirements of 40 CFR § 270.14(b)(8). Adherence to the procedures and proper use of the structures and equipment will help to prevent hazards, prevent undue exposure of personnel to hazardous waste, and prevent releases to the environment.

2.5.1 Fire Protection

The TWF is bordered on two sides by roadways and by parking lot and cleared space on the third side of the roughly triangular space. Beyond the roadways, grassland gives way to sparse piñon woodland near canyons to the north. South of the TWF, ponderosa pine trees and piñon/juniper are about equally distributed and there are stands of scrub oak. Trees near and within canyons are almost all ponderosa and the terrain is covered with shrubs and bushes of various species.

Defensible fire perimeter around TWF structures will be maintained and will include the concrete pad within the fenced TWF, Puye/Pajarito Roads, and parking areas outside of the TWF. Some vegetation control including grass trimming and shrub cutting is anticipated outside the TWF during the growing season, especially to the south and east of the TWF. At least 75 ft of defensible space around the unit will be maintained for minimization of exposure to wildland fire per NFPA 1144, *Standard for Reducing Structure Ignition Hazards from Wildland Fire*, (NFPA, 2007).

The TWF unit uses a wet-pipe sprinkler system designed in accordance with the pertinent portions of the 2010 edition of NFPA 13, *Standard for the Installation of Sprinkler Systems,* for fire suppression. The fire water supply will be sufficient for the fire suppression systems in storage buildings. Water will be supplied via the 125,000-gal tank north of the operations support building, with a combination of electric- and diesel-powered fire pumps, the tank and its associated level detection, freeze protection, pumps, and power supply for the pumps. The fire suppression water will be pumped to automatic sprinkler systems in the buildings. A dry-pipe

sprinkler system connected to the potable water supply of the Operations Support Building provides fire suppression protection for the loading/unloading canopy. This system is designed in accordance with NFPA 13. Further details for the systems are shown in Figures 2-14, 2-15, 2-24, 2-25, and 2-31.

Automatic fire suppression is not currently planned for the characterization trailers. Given the small size of the trailers, firefighter entry is not anticipated during an emergency; therefore, lack of fire suppression systems is not considered a potential firefighter hazard requiring built-in protection. However, the capability of providing automatic fire suppression in the future will be provided through the facility utility hookups included in the TWF design.

The fire alarm systems are designed in accordance with pertinent sections of NFPA 72, *National Fire Alarm and Signaling Code*. The storage buildings and characterization trailers in the unit will be tied into a single fire alarm panel located at the TWF Support Operations Building. Fire alarms will also be connected to the Los Alamos Fire Department (LAFD) through the Los Alamos County Consolidated Dispatch Center (LACCDC). Sprinkler system water flow, manual pull-stations, and system supervisory and trouble signals will be monitored at the fire alarm control panel. A fire alarm at any location within the TWF is currently anticipated to result in a TWF-wide alarm: horns/strobes in all appropriate facilities will sound simultaneously; a public address system will be part of this system configuration. If the public address system is to be used for emergency notification, then the system design must meet NFPA 72 requirements. Section 2.7.1 of this permit modification request submittal also includes descriptions of additional fire equipment such as fire extinguishers and alarms.

In addition to the on-site TWF capabilities, the LANL facility fire protection resources and procedures contained in Permit Section 2.11, *Contingency Plan* and Attachment D, *General Contingency Plan* of the Permit may also be utilized if the Contingency Plan is implemented in the event of a fire at the unit. These will include coordination by the LANL Emergency Manager of fire suppression activities and emergency medical services with internal and external agencies such as the LAFD .

2.5.2 Lightning Protection

Lightning protection is provided for TWF storage and storage & characterization buildings. Figure 2-37 presents the Electrical Site Plan which provides locations for electrical poles equipped with grounding features that protect the unit structures from lightning. Figure 2-37 specifies design details for both lighting and lightning protection poles. Lightning protection consisting of a system of copper wiring connected to grounding rods protects personnel and structures by providing a path to ground for a lightning strike in the vicinity or a direct strike to a structure. Lightning protection prevents uncontrolled discharge of hazardous electrical energy in a manner that injures personnel, damages equipment or structures, or results in fire.

2.5.3 Waste Handling and Preventing Hazards during Loading/Unloading

Flatbed trucks, trailers, forklifts, or other appropriate vehicles may be used to transport waste containers to and from the waste management unit at the TWF and other LANL waste generation or management units. These vehicles will not be used to transport waste on the concrete pad. Only electric forklifts will be used for vehicular transport of waste containers within the TWF to

reduce the combustible- and flammable-loading associated with TWF operations. Forklift operators may use an auxiliary boom, if necessary, to improve handling capabilities. Trained spotters may assist with container movement during forklift operations. Light drums may be handled manually or with a dolly. The use of proper handling equipment, appropriate to a container's size and weight, helps to prevent hazards while moving containers. Waste management personnel will be trained for safe handling operations in accordance with Attachment F, *Personnel Training Plan*, of the Permit.

2.5.4 Control of Run-on/Run-off

This information is provided to meet the requirements of 40 CFR §264.175(b)(4) and 40 CFR §270.14(b)(8)(ii). Controlling run-on and run-off at the TWF locations where waste management operations will regularly occur is accomplished by the design of the buildings and the use of control structures with appropriate contouring of surface areas. Run-on of storm water into the storage buildings will not occur. The building walls are on raised floors, and surface contouring slopes away from the building to prevent storm water from pooling against the foundations, doors, and loading areas. The internal floors of the buildings will be sloped to the front doors to prevent flooding by precipitation or storm water in addition to providing drainage to the outside.

The TWF site will maintain a nominally 2% slope to optimize drainage and the use of electric forklifts to handle waste containers. After the site has been graded, the site will be lower in elevation than Pajarito Road or Puye Road. A retention wall will maintain the differences in elevation between the roads and the site. The site will be surfaced in concrete and will include a retention basin for management of storm water and for the collection of fire suppression water until it is sampled and verified to be uncontaminated. Retention basin capacity includes the run-off from a 25-yr 2-hr precipitation event in addition to a fire event or a total capacity of approximately 137,450 gallons or 18,375 cubic feet of water.

Secondary containment will be provided where potential liquid-bearing containers are stored in the buildings to prevent run-off. Secondary containment systems (e.g. pallets) will be utilized, as needed, and will have sufficient capacity to contain at least 10 percent (%) of the volume of potential liquid-bearing containers or the volume of the largest container stored in the system, whichever is greater, pursuant to the requirements of 40 CFR §264.175(b)(3) and Permit Section 3.7, *Containment Systems*.

Waste spills or leaks will be managed inside the characterization trailers to prevent run-off. Waste staged under the canopy will be protected by the roof. Containers stored outside on the concrete pad will be protected from contact with precipitation in accordance with Permit Section 3.5.1 (5).

Storm water run-on/run-off controls will meet requirements pursuant to the TA-63 TWF Multi Sector General Permit Storm Water Plan to be developed for the site.

2.5.5 Preventing Water Supply Contamination

The waste management unit at the TWF will be located, designed, constructed, operated, and maintained in a manner that will ensure the prevention of water supply contamination. No disposal activities will occur at the site. Waste storage activities involving any potential liquids will occur only with secondary containment (pallets) and covers, if outdoors. In the event of a release, the liquids will be removed as quickly as possible and packaged in an appropriate

container. Potential spills of liquid and solid form wastes will be contained in the storage buildings or prevented from contact with the subsurface by the concrete pad until clean-up occurs. Waste containers will be inspected daily while management activities are occurring in accordance with Permit Section 2.6, *General Inspection Requirements*. Spill responses will be subject to the conditions of Permit Section 2.10.4, *Spill Response*, or Section 2.11, *Contingency Plan* regarding containment and clean-up. Given these conditions, there is little to no potential for contaminants to enter the groundwater or other water supplies as a result of normal operations or accidents at the TWF.

In addition, the depth to groundwater at Well R-46 (the groundwater monitoring well adjacent to the northeast fenced portion of the TWF) is approximately 1,326 ft below ground surface after surface grading is completed (LANL, 2009/2010). The average annual precipitation in the Los Alamos area (including both rain and water equivalent or frozen precipitation) is 48 centimeters (cm) or 18.9 inches (in). The evaporation of freestanding water measured by pan evaporation rates significantly exceeds the annual precipitation. Representative evaporation rates for nearby locations include Santa Fe, 62.9 in/year, Cochiti Dam 88.0 in/year, Abiquiu Dam 72.13 in/year, and Jemez Dam 82.0 in/year. (WRCC, 2011). Permeability rates for soils nearby at TA-55 range from 1.5 to 5.0 cm per hour (cm/hr) in the top layers to 0.15 to 5.0 cm/hr in the lower layers. Available water-holding capacity ranges from 0.14 to 0.21 percent (Nyhan et al., 1978). Collectively, the depth to the regional aquifer, the annual moisture deficit, and soil parameters significantly limit the potential for contaminants to migrate to the groundwater in the unlikely event that contaminants reach the permeable ground surface surrounding the TWF.

The water supply lines to the TWF will be under pressure and will be equipped with backflow prevention devices to prevent potential contamination of the unit's potable water supplies. Pursuant to the requirements of 40 CFR §270.14(b)(8)(iii), no impact to water supplies is expected.

2.5.6 Mitigating Effects of Power Outages

Electrical power will be supplied at the TWF to operate building heating systems, the Public Address (PA) system, various instruments, and other electrical equipment. Evacuation alarms, equipped with a battery backup, will be located throughout the TWF and will continue to operate for eight hours during a power failure. Lighting and fire alarms will also have battery back-up power for 8 hours. Operations at the waste management unit will be discontinued until power is restored. Neither a power nor an equipment failure would affect containment at the TWF waste management unit.

A seismic event of sufficient magnitude will trip a seismic switch resulting in loss of power at the unit. The three circuit breakers in the main service to the site will each have a shunt trip solenoid connected to a control power circuit. The control power circuit will interrupt the power when seismic sensors are activated by a seismic event. A control scheme that requires a minimum of two activated sensors before control power is applied to the trip coil of the breakers will be used. This scheme will minimize the nuisance tripping of power upon activation of only one sensor. The seismic sensor proposed is the Kinemetrics "Etna" device as used at TA-55 or an equivalent. This design feature is preventative in nature and is specified to prevent issues associated with downed or damaged power lines.

2.5.7 Preventing Undue Exposure

To prevent undue exposure of personnel to hazardous or mixed waste, PPE appropriate for the waste containers being managed and the work performed will be worn by all on-site personnel at the TWF. Hard hats, safety shoes or boots, and gloves may also be worn while equipment is being operated and when containers are being loaded or unloaded. The different levels of PPE are defined by the Occupational Safety and Health Administration (OSHA) as follows:

Level D: Coveralls; safety shoes or boots; safety glasses or goggles; hard hat; and appropriate gloves.

Level C: Full-face, air-purifying respirator with appropriate cartridges for the chemicals or hazards present; chemical-resistant suits; chemical-resistant safety boots or booties; and inner and outer gloves.

Level B: All Level C equipment plus self-contained breathing apparatus in place of a Level C full-face respirator.

Level A: All Level B equipment, plus a fully-encapsulating chemical-resistant suit.

Most waste-handling operations at the TWF will require that personnel handling wastes or working in the unit will wear modified Level D PPE, (safety glasses and hard hats are not always required depending on the associated work hazards identified in job-specific hazard control plans). Modified Level D may include any combination of items in Level D. There are instances where an increased level of PPE is required, such as during sampling of headspace gases and change out of container vent filters, an emergency, or an unusual hazardous situation. If a situation arises during an emergency and an increased level of PPE is required, the PPE will be compatible with the hazards present. All personnel that use PPE are trained and qualified to use the equipment properly.

All personnel involved in waste-handling operations in the TWF will be required to have training appropriate for their work. Training requirements are presented in Attachment F, *Personnel Training Plan,* of the Permit. Personnel will also be required to review job hazards prior to performing waste-handling activities. Sampling plans, hazard control plans (which address monitoring equipment), and work authorizations will be required, in accordance with LANL safety procedures. The need for Personal Contamination Monitors (PCM, e.g., dosimeter, Draeger™ Tubes) will be established using the job hazard review process. Together, the required training, plans, and work authorizations will help to prevent undue exposure to personnel.

2.5.8 Air Emission Standards for Containers

The hazardous wastes that will be stored in containers at the TWF may be subject to 40 CFR Part 264, Subpart CC, "Air Emission Standards for Tanks, Surface Impoundments, and Containers" based on the applicability criteria specified in 40 CFR §264.1080 if non-radioactive waste is managed. Permit Section 3.9, *Volatile Organic Air Emissions*, implementing the Subpart CC requirements will also apply in such a case. Subpart CC standards for containers, as currently set forth by the EPA, require that containers of hazardous waste be covered so that there are no detectable emissions of volatile organic compounds to the air. Inspection and monitoring requirements are also specified.

However, as indicated in 40 CFR § 264.1080(b)(6), these standards are not currently applicable to containers that are used solely for management of radioactive mixed waste in accordance with

the regulations under the authority of the Atomic Energy Act and the Nuclear Waste Policy Act (EPA, 1994). This exemption will apply for the majority of waste containers stored and characterized at the TWF. The basis for this exemption is the need for these containers to be vented to prevent hydrogen gas buildup as described in the next section. These containers will be clearly labeled as radioactive in accordance with Permit Section 3.6, *Waste Container Labeling*. Under 40 CFR 264.1080, the standards are also not applicable to other containers of hazardous waste with less than 500 parts per million by weight (ppmw) VOCs or containers of less than 0.1 cubic meters (m^3) (approximately 26 gal) capacity, which may apply to hazardous wastes generated on-site.

The following management standards apply for hazardous wastes managed at the TWF that do not meet any of the exemptions listed in 40 CFR §264.1080(b) (or 40 CFR §265.1080(b) for wastes managed under 40 CFR Part 262 generator standards). Generator information will be used to determine whether the concentration of volatile organics in a waste stream at the point of generation is less than 500 ppmw, or is equal to or greater than 500 ppmw, which is the threshold concentration for Subpart CC requirements. In the event that this information is not available, the waste will be characterized in accordance with Attachment C, *Waste Analysis Plan*, of the Permit. Any hazardous waste that is newly-generated at the TWF or re-categorized through the characterization of waste managed at the TWF will be characterized in this manner.

Three levels of air emission controls based on container design capacity are established in 40 CFR § 264.1086(b). The TWF hazardous waste storage procedures will require Level 1 controls based upon container design capacities if hazardous waste is managed. Containers of greater than 0.1 m^3 and less than 0.46 m^3 (approximately 119 gal) capacity and that meet U.S. Department of Transportation (DOT) specifications under 49 CFR, Part 178, will be kept closed during storage pursuant to 40 CFR § 264.1086(c)(3). Containers undergoing waste characterization activities may be opened for access for the purposes described in 40 CFR § 264.1086(c)(3). As required by 40 CFR § 264.1086(c)(4), these containers are subject to a visual inspection and monitoring program. During storage at the TWF, the container will be inspected to check for visible cracks, holes, gaps, or other open spaces into the interior of the container when the cover and closure devices are secured in the closed position, in accordance with 40 CFR § 264.1086(c)(1)(ii). Pursuant to the Permit Section 2.6, *General Inspection Requirements* and Attachment E, *Inspection Plan*, containers will be inspected at least weekly at the TWF to ensure that the containers remain closed during storage.

2.5.9 Preventing Releases to the Atmosphere

As discussed, in the previous section, radioactive mixed waste is exempt from the air emission controls of 40 CFR Part 264, Subpart CC. Release of TRU elements to the atmosphere from waste containers at TWF will be prevented by engineered controls and operations. Containers will not be opened during handling and storage. Inspections will be conducted to ensure the integrity of all stored containers as described in Attachment E, *Inspection Plan*, of the Permit.

One or more Nuclear Filter Technology (NucFil®) vent filters are installed in all TRU waste containers. The filtered vent is designed to release hydrogen, flammable gases, and VOCs, thereby preventing over pressurization and leakage from the container. The NucFil® filter media is referred to as carbon-carbon (or Carbon-bonded-Carbon™), a proprietary material manufactured to release hydrogen at a rate greater than 1.85xE(-05) mole/second/mole fraction. Flammable gases and VOCs are also vented but the rate is dependent on the size of the molecule

relative to porosity of the carbon-carbon filter media. Further details regarding the vents are included in Attachment C, *Container Vents*, of this document.

The vent filters will also prevent the escape of any radioactive or other particulates. The drum vent (installed in the container by the waste generator) will be checked to ensure proper operation when the waste is received. The potential exists for plugged vents to be replaced at the TWF; if so, such operations will be conducted under a portable HEPA-filtered hood.

Radioactivity monitoring will occur in the storage buildings and characterization trailers at the TWF as required by 10 CFR 835, *Occupational Radiation Protection*. This may involve a range of monitoring options such as continuous air monitoring and routine swipe sampling for radioactive constituents determined by the waste management activities and locations. Radioactive monitoring can provide an indication that hazardous waste is also potentially present through the concept of co-detection. Co-detection refers to the detection of hazardous waste released from waste containers by the detection of radioactivity based on the commingling of the types within the container. If radiological monitoring or surveys reveal radiological contamination, hazardous waste contamination is assumed. Because radiation detection equipment is very sensitive, relatively small releases from a container can be detected.

These monitoring activities will provide for detection of a radioactive release from waste management activities and therefore, a surrogate indication of a potential hazardous waste release. In the event of an unexpected release, all personnel working within or near the area will be notified immediately to evacuate. Such an event may also trigger the implementation of the Contingency Plan procedures in the Permit.

2.6 PREPAREDNESS AND PREVENTION

The following sections present waste management techniques that will be used at TA-63 to comply with the preparedness and prevention requirements of 40 CFR Part 264, Subpart C. Additional information on the communication and alarm equipment available at LANL is presented in Attachment D, *Contingency Plan*, of the Permit. A discussion of the emergency equipment available for use at the hazardous waste management unit at the TWF is provided in Section 2.6.1 of this document. The TWF will be designed, constructed, maintained, and operated to minimize the possibility of a fire, explosion, or any unplanned sudden or non-sudden release of hazardous waste or hazardous waste constituents to air, soil, or surface water which could threaten human health or the environment, in accordance with 40 CFR § 264.31.

2.6.1 Required Equipment

The TWF will be equipped with safety-alarm systems to alert personnel in the event of an emergency and to evacuate the area. These alarm systems will be located both inside and outside the unit and will be monitored. The facility monitor/control system will be in operation 24 hours a day and will be located in the access control station at the TWF. Specific facility monitor/control system equipment to be located at the TWF is discussed below.

Emergency equipment will be located throughout the TWF and will include fire alarms, fire response systems, alarm systems, internal communications, spill kits, and decontamination equipment. Detailed information on the required emergency and safety equipment located at the

TWF is provided below.

Pursuant to NFPA standards, fire-alarm pull boxes and/or drop box push-button alarms will be located in the TWF where waste management activities will be conducted. Fire-alarm pull boxes may be used by personnel to activate a local fire alarm when a fire or other emergency is discovered. The TWF will also be equipped with automatic fire-suppression alarm systems. The fire-suppression alarms will be activated when water flow is detected in the sprinkler pipes of the fire-suppression system. Upon activation of the fire-alarm system, an alarm will sound and red lights will flash to alert personnel of emergency conditions. All fire-alarm pull boxes and automatic fire-suppression systems that will be located at the TWF will alert the LAFD through the LACCDC.

In addition to the alarms described above, a PA system may also be used to announce emergency conditions or to initiate an evacuation at the TWF. The PA system will be audible throughout the TWF and will be activated at the access control station in the Operations Support Building.

Personnel working at the TWF will have the ability to communicate the location and nature of hazardous conditions using conventional telephones or cellular telephones to call the access control station. This type of call will summon assistance from the Emergency Management and Response Office, local police and fire departments, and state emergency response teams, if necessary.

Fire control equipment will be readily available for the waste management unit. Portable fire extinguishers will be available and may be used by trained on-site personnel depending on the size of the fire and the fuel source. However, LANL policy encourages immediate evacuation of the area and notification of appropriate emergency personnel. Fire hydrants are located in accordance with NFPA standards on the west and east sides of the TWF pad and near the Operations Building (see Figure 2-3). Water will be supplied to the fire hydrants by a municipal water system which will provide adequate volume and pressure (i.e., greater than 1,000 gal per minute and 90 pounds per square inch static pressure) to multiple water hoses in the event of a fire. The LAFD will supply all water hoses needed in the event of a fire at the TWF.

There will be spill kits available at the TWF in the storage areas to mitigate containable spills. These kits will typically contain sorbents, neutralizers, PPE and other equipment essential for containment of spills. Trained personnel will use the spill kits only if they know what has been spilled and they are sure their actions will not put themselves or others at risk. In addition to the spill kits, cleanup equipment such as shovels, bags, drums, etc. will be available at the TWF. Overpack drums and sorbents will also be stored in an equipment storage shed on the west side of the TWF. Emergency personnel can also provide additional spill control equipment and assistance upon request depending on the size and severity of the spill.

Personnel decontamination equipment that will be available at the TWF will include safety showers and eye wash stations located inside each of the storage buildings. These will be situated at all the waste storage buildings in accordance with OSHA requirements. Additional decontamination equipment may be provided by emergency personnel. Material Safety Data Sheets MSDS (e.g., for cleaners or solvents used on site) will be available at operations areas and will provide useful exposure information in accordance with OSHA requirements.

2.6.2 Testing and Maintenance of Equipment

All communications and alarm systems, fire protection, and decontamination equipment at TWF

will be inspected, tested, and/or maintained as provided according to the inspection schedule detailed in Section 2.9 of this permit modification submittal. The frequency of inspection will be adequate to ensure proper operation in the event of an emergency. Maintenance, repair and replacement of emergency equipment will be performed as required.

2.6.3 Access to Communications or Alarm System

When waste is being handled in the TWF hazardous waste management unit, all personnel involved will have immediate access to an internal alarm or emergency communication devices, either directly or through visual or voice contact with another individual. These devices will include fire alarms, evacuation alarms, and cellular telephones. In the event of an emergency, communication equipment at the TWF will allow personnel to contact emergency response personnel, the access control station at the Operations Support Building, the operating group management, and/or the LACCDC operator. In addition to communications and alarm systems, the TWF personnel may carry pagers so that they can be contacted by the access control station and other LANL emergency support personnel at all times.

2.6.4 Space Requirements

Waste containers in the TWF storage units will be arranged in rows with a minimum aisle space of 24 in. Storage configuration within a row will depend upon the type of container, its size, and its weight restrictions. Fifty-five-gal drums will be placed on a pallet, banded in an array of four drums, and arranged in rows allowing inspection of all sides and bottom. The four-drum on a pallet array may be stacked up to three units high. SWBs and SLB2s will be stacked to a maximum of two containers high. Stacking height for other containers will be assessed on the basis of container size and weight restrictions (which may prohibit stacking), to address any safety concern.

2.7 CONTINGENCY PLAN

In accordance with 40 CFR Part 264, Subpart D and 40 CFR § 270.14(b)(7), emergency measures applicable to the TWF are provided in Attachment D, *Contingency Plan*, of the Permit. Specific information on emergency response resources and release prevention/mitigation at the TWF is provided below. A copy of the Contingency Plan in Attachment D of the Permit will be maintained at the Operations Support Building, 63-0144. Hazardous waste compliance personnel will be primarily responsible for updating the plan.

Figure 2-39 shows the evacuation route and muster area that may be used at the TWF in the event of an emergency. The evacuation route, muster area location, and emergency equipment are subject to change. A listing of emergency equipment currently available for use at the TWF is provided below.

The waste management personnel at the TWF will be trained in emergency procedures and responsible for correction of a nonsudden release from the unit if the correction can be performed safely with normal maintenance and management procedures. Personnel from the Emergency Management and Response Office may provide assistance in mitigating releases. Any correction methods for nonsudden releases that have resulted in an impact to the environment will be coordinated with the NMED.

Contingency or emergency measures are unanticipated "fires, explosions, or any unplanned

sudden or non-sudden release of hazardous waste ..." for which a schedule of remedial actions cannot be reasonably ascertained. Any remedial actions carried out under the provisions of the Contingency Plan will be performed as soon as possible to ensure protection of human health and the environment, as described in Attachment D of the Permit. These remedial actions include site cleanup; proper handling of recovered waste, contaminated soil, or contaminated surface water; decontaminating equipment, as needed; replacing or repairing equipment, as needed; and testing to verify successful cleanup.

2.7.1 Emergency Equipment at the TWF

The following sections list the equipment located at the TWF in case of an emergency. The list is similar to the unit specific lists included in the Contingency Plan of the Permit.

2.7.1.1 Fire Control Equipment:

ABC and/or BC rated fire extinguishers are located in the storage buildings, the characterization trailers, and at the receiving canopy. An ABC rated fire extinguisher is located in each vehicle used to transport waste containers.

Description of General Capabilities:

Portable, manually operated, fire extinguishers may be used by any qualified employee in event of a small fire. For larger fires, the LAFD is alerted.

2.7.1.2 Communication Equipment:

Telephones and the public address system are located inside the Operations Support Building.

Description of General Capabilities:

Telephones for internal and external communication are available for use by any employee. Employees can be notified of an emergency situation and appropriate response action through the PA system.

Fire alarm pull stations are located in the storage buildings, the receiving canopy, and at operations support building.

Description of General Capabilities:

Manually-operated fire alarms may be activated by any employee in the event of a fire to alert TWF site personnel, LANL Emergency Response Personnel, and the LAFD.

Fire and public address system alarms

Description of General Capabilities:

The fire and public address system are activated or used to provide a sound signal to alert personnel of fires or the need to clear the area.

2.7.1.3 Decontamination Equipment:

Eyewash/emergency shower stations and MSDSs are available in the storage buildings and the Operation Support Building. MSDS information is maintained where appropriate for personnel accessibility and are used for chemicals that will be needed to support operations or emergency activities.

Description of General Capabilities:

Eyewashes and emergency showers may be used by personnel who receive a chemical splash to the eyes or body. Specific MSDSs should be reviewed prior to working with chemicals.

2.7.1.4 Personal Protective Equipment

Personnel at TWF will be required to use appropriate PPE to protect themselves from hazards found under normal conditions. This PPE may include gloves, steel toe shoes, and eye protection, additional PPE may be required during unusual hazardous situations. First aid kits and hearing protection will also be available.

Description of General Capabilities:

To prevent undue exposure of personnel to hazardous or mixed waste, PPE appropriate for the waste containers being managed will be worn by all on-site personnel at the TWF (see section 2.5.6). First aid kits may be used by personnel who sustain minor injuries at the unit in the course of operations. Hearing protection may be used by operations personnel to mitigate noise impacts.

2.7.1.5 Other

If transportation is needed for evacuation, vehicles may be obtained through the Emergency Management and Response Group.

2.7.2 Support Agreements with Outside Agencies

Information on support agreements with outside agencies, as required by 40 CFR § 264.37, is presented in Attachment D, *Contingency Plan*, of the Permit. These include local and state emergency organizations, police, fire, and medical agencies.

2.8 IGNITABLE, REACTIVE, AND INCOMPATIBLE WASTES

Incompatible wastes will be segregated and separated during storage in accordance with 40 CFR § 264.177(c). All waste will be segregated and stored in accordance with DOT compatibility groups. These DOT compatibility groups are: flammables (Class 3), oxidizers (Class 5.1), combustible and noncombustible miscellaneous hazardous material (Class 9), corrosives (Class 8), poisons (Class 6), radioactive (Class 7), acids (Class 8), reactives (Class 4), and non-regulated materials. Incompatible wastes will be separated and segregated from other wastes and materials by means of a berm, dike, wall, or other specific means (e.g., secondary containment pallets, modular sheds, distance) during storage. In addition, no incompatible waste will be mixed, and no waste will be placed in a container that previously held an incompatible waste, as required by 40 CFR §§ 264.177(a) and (b), and 40 CFR § 270.15(d).

There will be no sources of open flames allowed within the unit. Cutting and welding activities will not be conducted in the vicinity of waste containers. Ignitable or reactive wastes will be packaged in sealed containers and will not be exposed to ignition sources. Waste management practices of segregation and separation by distance in the TWF storage buildings will minimize the possibility of accidental ignition. Indoor storage eliminates exposure to spontaneous ignition sources such as sunlight and contact with hot surfaces. These wastes will be stored a minimum of 15 m from the TA-63 boundary in accordance with 40 CFR 264.§176 and Permit Section 2.8, *Special Requirements for Ignitable, Reactive, or Incompatible Waste*. The distance to the nearest

TA-63 boundary from the TWF boundary is approximately 1.5 m (5 ft) further than the 15 m requirement as shown in Figure 2-40. This distance is only applicable for the south-western side of the TWF where no waste storage is anticipated. The areas and structures where storage occurs in the unit are all significantly over 15 m from the TA-63 boundaries.

Only non-sparking tools will be used for waste management operations such as removing plugged filter vents from waste containers. Smoking will not be allowed in the TWF. "No Smoking" signs will be conspicuously placed wherever there is a potential hazard from ignitable or reactive waste, as required by 40 CFR § 264.17(a). Precautions will be taken to prevent reactions that may generate extreme heat, pressure, fire, or explosion. TWF operations will minimize the potential for prevent reactions that may produce uncontrolled toxic mists, fumes, dusts, or gases in sufficient quantities to threaten human health or the environment. TRU waste containers will have vents to prevent over-pressurization as discussed previously. Containers will not be opened during storage except to replace vents if necessary. Together, these measures will meet the requirements of 40 CFR §§ 264.17(a) and (b) and 264.176. Cutting and welding activities will be conducted in the TWF only under special authorization and will not be conducted in the vicinity of waste containers. Lightning protection will be provided at the TWF site as described in Section 2.5.2 of this document.

2.9 INSPECTION

In accordance with the requirements of 40 CFR § 264.15 and Permit Section 2.6, *General Inspection Requirements*, the TWF will be inspected daily when in use (i.e., when wastes are managed at the unit) and weekly when not in use. Inspection parameters are specified in Attachment E, *Inspection Plan*, of the Permit.

2.9.1 Additions to Inspection Plan Necessary for the TWF

In accordance with 40 CFR §§ 264.15(b) and 264.602, the TWF is inspected according to the schedule provided below. Inspection frequencies are adequate based on the deterioration rates of equipment/systems and the probability of harm to human health or the environment if failure of the equipment/systems occurs, or any operator error goes undetected between inspections.

2.9.1.1 On Day(s) of Waste Handling

Inspections will be conducted every day of operation (i.e., every day that waste handling occurs) in accordance with Attachment E, *Inspection Plan,* of the Permit. For inspections conducted on the day of waste handling at the TWF, the items contained in Attachment E, Section E.2.1, will be addressed as appropriate.

2.9.1.2 Weekly Inspections

Weekly inspections of the TWF will be conducted if no waste handling will occur during that week or when waste is in storage in the unit. Weekly inspections will be conducted in accordance with Attachment E, *Inspection Plan,* of the Permit. Section E.2.2 will be addressed as appropriate.

2.10 RECORDKEEPING REQUIREMENTS

In accordance with 40 CFR Part 264, Subpart E, recordkeeping requirements applicable to the TWF are discussed in the following sections. TWF operations will meet the requirements

contained in Permit Section 2.12, *Recordkeeping and Reporting*.

2.10.1 Manifest Systems

Waste information supporting shipping manifests will be updated to record TWF TRU waste characterization activities. This data will support manifest information needed for shipments of waste received at, or initiated from, the LANL Facility as a whole. Documentation for each TRU waste container will be maintained from the time of receipt at the TWF and records will follow each container to the RANT Facility where the manifest is completed upon shipment to WIPP. Waste characterization data for manifests for secondary mixed low-level and hazardous waste streams at the TWF will follow the record keeping practices of Permit Section 2.12.1, *Manifest Systems* or the requirements of 40 CFR Part 262.

2.10.2 Facility Operating Record

Many of the records required under the Permit Section 2.12.2, *Facility Operating Record*, will be generated and maintained at TWF in support of LANL Facility requirements. In particular, these include:

- Hazardous waste received and managed, Section 2.12.2(1);
- Location of waste stored, Section 2.12.2(2);
- Waste analyses, Section 2.12.2.(3);
- Contingency Plan incidents, Section 2.12.2.(4);
- Inspection records, Section 2.12.2.(5);
- 40 CFR §268.7 notices, Section 2.12.2.(10);
- Secondary containment records, Section 2.12.2.(15);
- Personnel training records, Section 2.12.2.(16);
- Alternate emergency equipment, Section 2.12.2(17;) and
- Fire suppression system activations, Section 2.12.2(18).

TWF personnel will be trained in the implementation of these record requirements and will maintain logbooks or other formats to enable saving applicable data. These or compiled records will be maintained in the Operations Support Building as part of the unit's operating record.

2.10.3 Availability of Facility Operating Record

The TWF operations will comply with the requirements of Permit Section 2.12.3, *Availability of Facility Operating Record*, by keeping records on-site at the Operations Support Building or by passing data on to centralized LANL records or record organizations.

2.10.4 Biennial Report

The TWF will provide timely waste management data to cover the unit's activities to support the reporting requirements of Permit Section 2.12.5, *Biennial Report*. This will include a description and the quantity of each hazardous waste the facility received during the calendar years covered

by the report year and the method of treatment, storage, or disposal for each hazardous waste.

2.10.5 Unmanifested Waste Report

Waste from off-site sources may be accepted on a limited basis at LANL provided that such waste is properly characterized and manifested and meets the requirements listed in Permit Section 2.2.1, *Hazardous Waste from Off-Site Sources*. No wastes will be accepted for treatment at the TWF.

2.10.6 Additional Reports

In accordance with the requirements of 40 CFR § 264.77, LANL will also report the following to the NMED-HWB:

- Releases and unanticipated fires and explosions that require implementation of the contingency plan, as specified in 40 CFR § 264.56(i);
- Facility closures, as specified in 40 CFR § 264.115; and
- As otherwise required by 40 CFR Part 264, Subparts F, BB, and CC.

2.10.6.1 Waste Minimization

In accordance with the requirements of 40 CFR § 264.75 and Section 2.9 of the Permit, LANL develops a report outlining annual waste minimization efforts. This report is submitted to NMED-HWB prior to December 1 of each year.

2.10.6.2 Reporting Other Noncompliance

In accordance with the requirements of Permit Section 1.9.13 and 1.9.14, LANL develops an annual report outlining any non-threatening release from or at a permitted unit and all instances of noncompliance not reported as an anticipated noncompliance. This report is submitted to NMED-HWB prior to December 1 of each year.

Table 2-1

Proposed Storage Containers for Mixed Transuranic Waste

Container Type	Description	Requirements	Filter Vents [a]
Standard 55-gallon Drum	• Gross internal volume of 7.3 ft^3 (0.21 m^3). • Constructed of mild steel. • May also contain ridge, molded polyethylene (or other compatible material) liner.	Meet the requirements for DOT Specification 7A in 49 CFR §178.350.	One or more filter vents installed on top of the container.
Pipe Overpack Container (POC)	55-gallon drum containing a pipe component and dunnage.	DOE/WIPP 11-3384 Rev. 1 Page 9 of 27 DOT Type A payload container.	One or more filter vents installed on top of the container
Standard Large Box 2 (SLB2)	Gross internal volume of 261 ft^3 Length 108" x Height 74" x Width 69"	Meet the requirements for DOT Specification 7A in 49 CFR §178.350.	Up to 6 filter vents installed on top of the container
Standard Waste Box (SWB)	Gross internal volume of 66 ft^3 (1.88 m^3). Length 69" x Height 37" x Width 52"	Meet the requirements for DOT Specification 7A in 49 CFR §178.350.	One or more filter vents installed on top of the container.
Standard 85-gallon Drum Over Pack	• Gross internal volume of 11.3 ft^3 (0.32 m^3). • Used for over packing contaminated 55-gallon drums.	Not Applicable	One or more filter vents installed on top of the container.
100-gallon (379-liter) Drum	• gross internal volume of 13.4 ft^3 (0.38m^3). • May be direct loaded with contact-handled TRU mixed waste	Meet the requirements for DOT Specification 7A in 49 CFR §178.350.	One or more filter vents installed on top of the container.
Ten Drum Overpack	• Gross internal volume of 160 ft^3 (4.5 m^3). • Used to contain up to ten standard 55-gallon drums or one SWB	DOT Specification 7A and is certified to meet applicable requirements for Type A packaging	One or more filter vents installed on top of the container.
Oversized Waste Box	• Gross internal volume greater than 11.3 ft^3 (0.32 m^3). • Used for oversized waste.	Not Applicable	Two or more filter vents installed on sides of container.

[a] Vents are high-efficiency particulate air grade filters to preclude container pressurization caused by gas generation and to prevent particulate material from escaping. Vents have an orifice approximately 0.375 inches (9.53 millimeters [mm]) in diameter through which internally generated gas may pass. Filter media can be any material compatible with the contents of the container (e.g., composite carbon, sintered metal).

CFR = Code of Federal Regulations
DOT = U.S. Department of Transportation
ft^3 = cubic feet
m^3 = cubic meters

[This page has been left intentionally blank.]

Table 2-2

References for Waste Stored at the TWF

Waste Type	**Waste Stream Description**	**Permit Attachment C, *Waste Analysis Plan*, Waste Description Locations[a]**
Hazardous (generated at the TWF only)	• Spent Solvents • Contaminated Solid Waste • Paint and Related Waste • Corrosive Liquid Waste • Solid Metals and Metallic Compounds • Mercury Waste • Contaminated Non-Corrosive Aqueous and Non-aqueous Solutions and Sludges • Gas Cylinder Waste • Used Batteries and Battery Fluids	• Section C.1.2.1, *Non-mixed Hazardous Waste* • Table C-2, *Descriptions of Hazardous Waste Stored at the Facility* • Table C-9, *Parameters, Characterization Methods, and Rationale for Parameter Selection for Hazardous Waste* • Table C-16, *Summary of Characterization Methods for Hazardous Waste*
Low-Level Mixed (only TRU waste that is re-classified to Low Level Mixed will be stored at TWF until it can be dispositioned)	• Lead Waste • Noncombustible Debris • Combustible Debris • Organic Contaminated Combustible Solids • Mercury Wastes • Aqueous and Non-aqueous Liquids Contaminated with Heavy Metals and/or Organics • Gas Cylinder Waste	• Section C.1.2.2, *Mixed Low-Level Waste* • Table C-3, *Descriptions of Mixed Low-Level Waste Stored at the Facility* • Table C-10, *Parameters, Characterization Methods, and Rationale for Parameter Selection for Mixed Low-Level Waste* • Table C-17, *Summary of Characterization Methods for Mixed Low-Level Waste*
Transuranic Mixed	• S3000 Homogeneous • S4000 Soil/Gravel	• Section C.1.2.3, *Mixed Transuranic Waste* • Table C-4, *Facility MTRU*

	• S5000 Debris	*Waste Stream Waste Matrix Codes Correlated with Facility Waste Identification Systems* • Table C-5, *Descriptions of Mixed Transuranic Waste Stored at the Facility* • Table C-11, *Parameters, Characterization Methods, and Rationale for Parameter Selection for Mixed Transuranic Waste* • Table C-18, *Summary of Characterization Methods for Mixed Transuranic Waste*

[a] From *Los Alamos National Laboratory Hazardous Waste Facility Permit* (LANL, 2010)

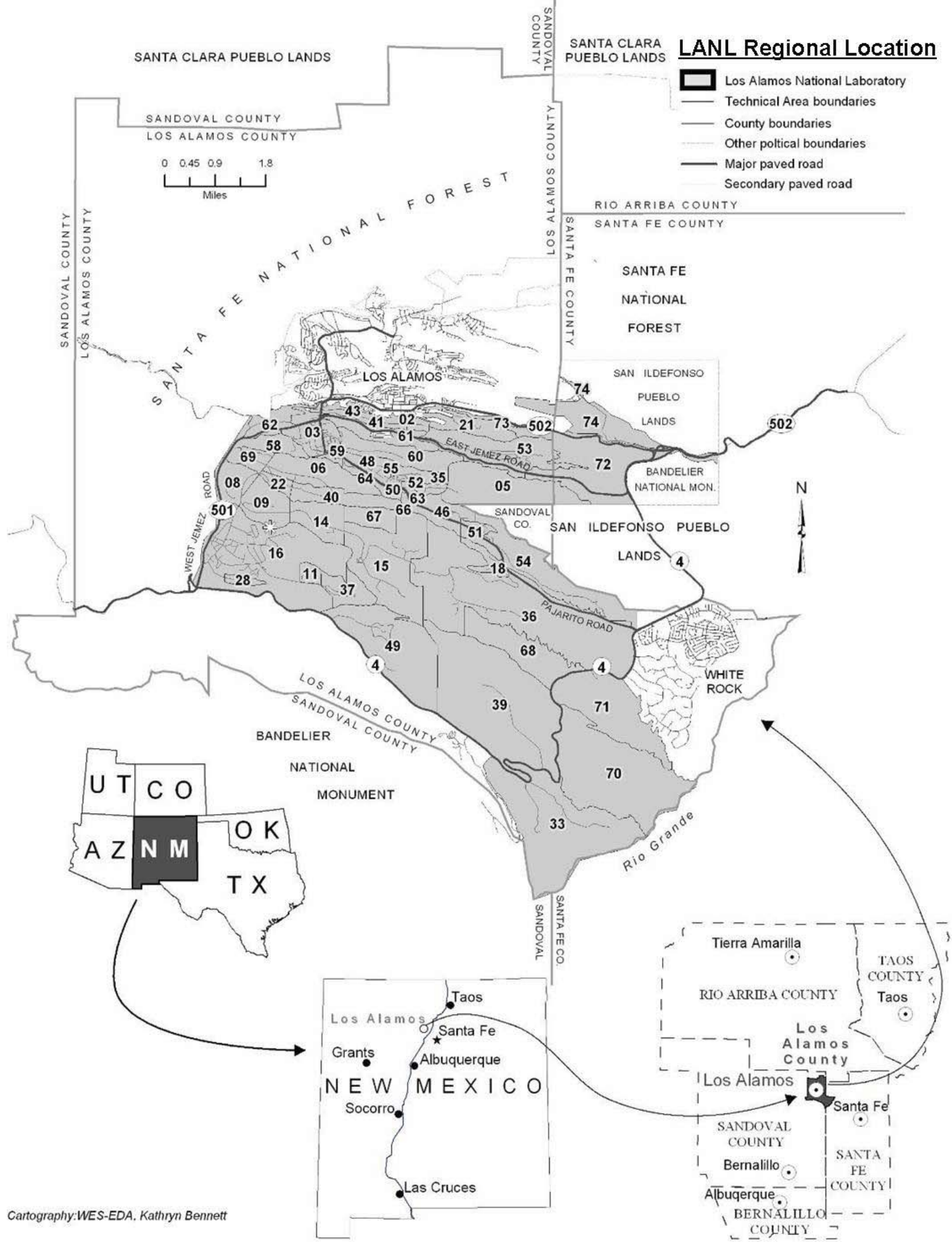

Figure 2-1. LANL Regional Location

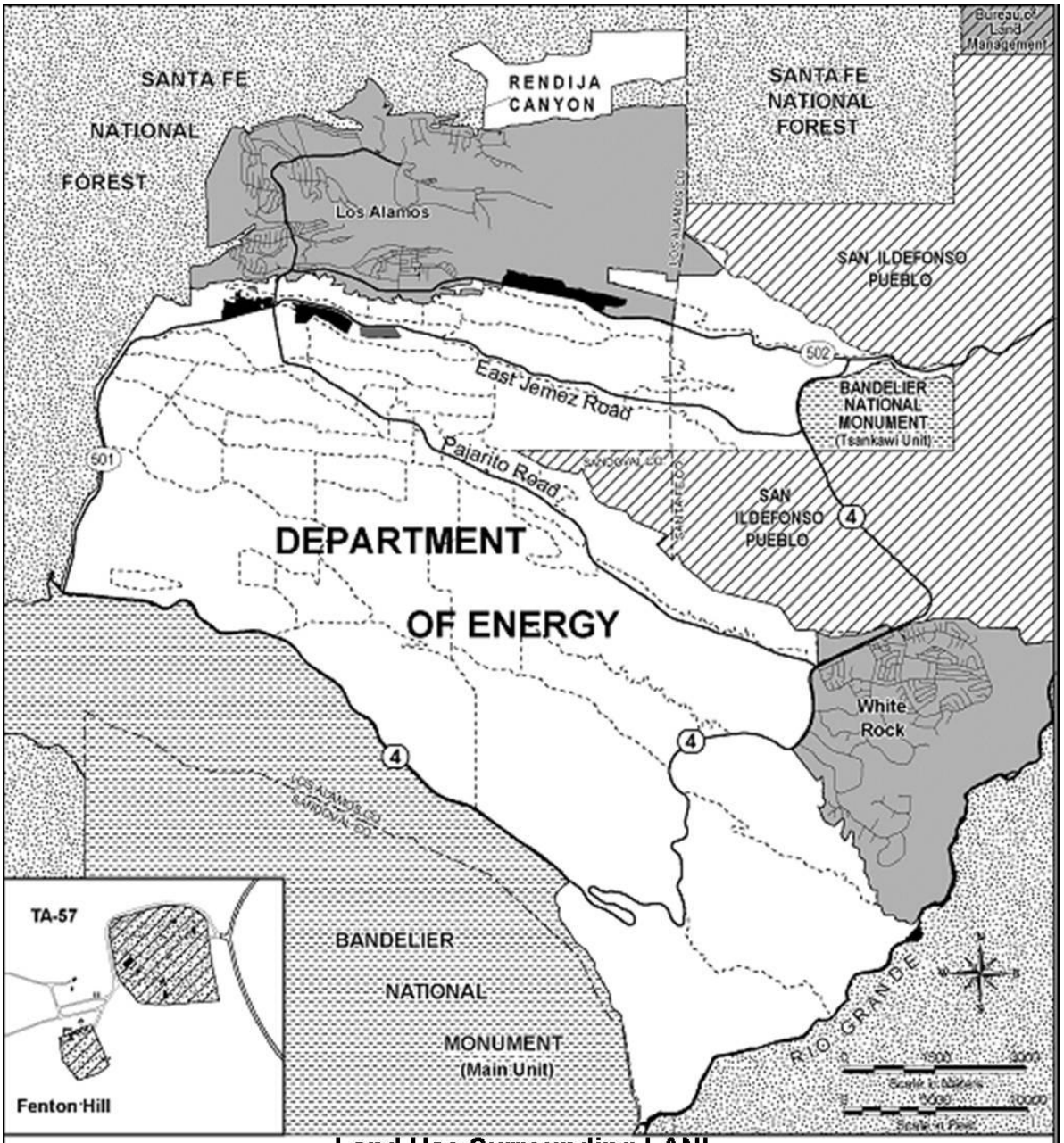

Land Use Surrounding LANL

- Road
- County
- Technical Area (TA) Boundary
- Bandelier National Monument
- U.S. Forest Service
- Private Land
- Bureau of Land Management
- Department of Energy Administered Accounts for Land Transferred in October 2002 and includes Rendija Canyon (Sportsmen Club)
- Department of Energy Administered and Leased
  - Airport
  - Landfill and Concrete Plant
  - Research Park
  - Isotopes of Carbon, Oxygen, and Nitrogen Facility Land at TA-46
- U.S. Forest Service, Managed by Department of Energy

Figure 2-2.Land Use Surrounding LANL

Source: Modified from LANL 2004c.

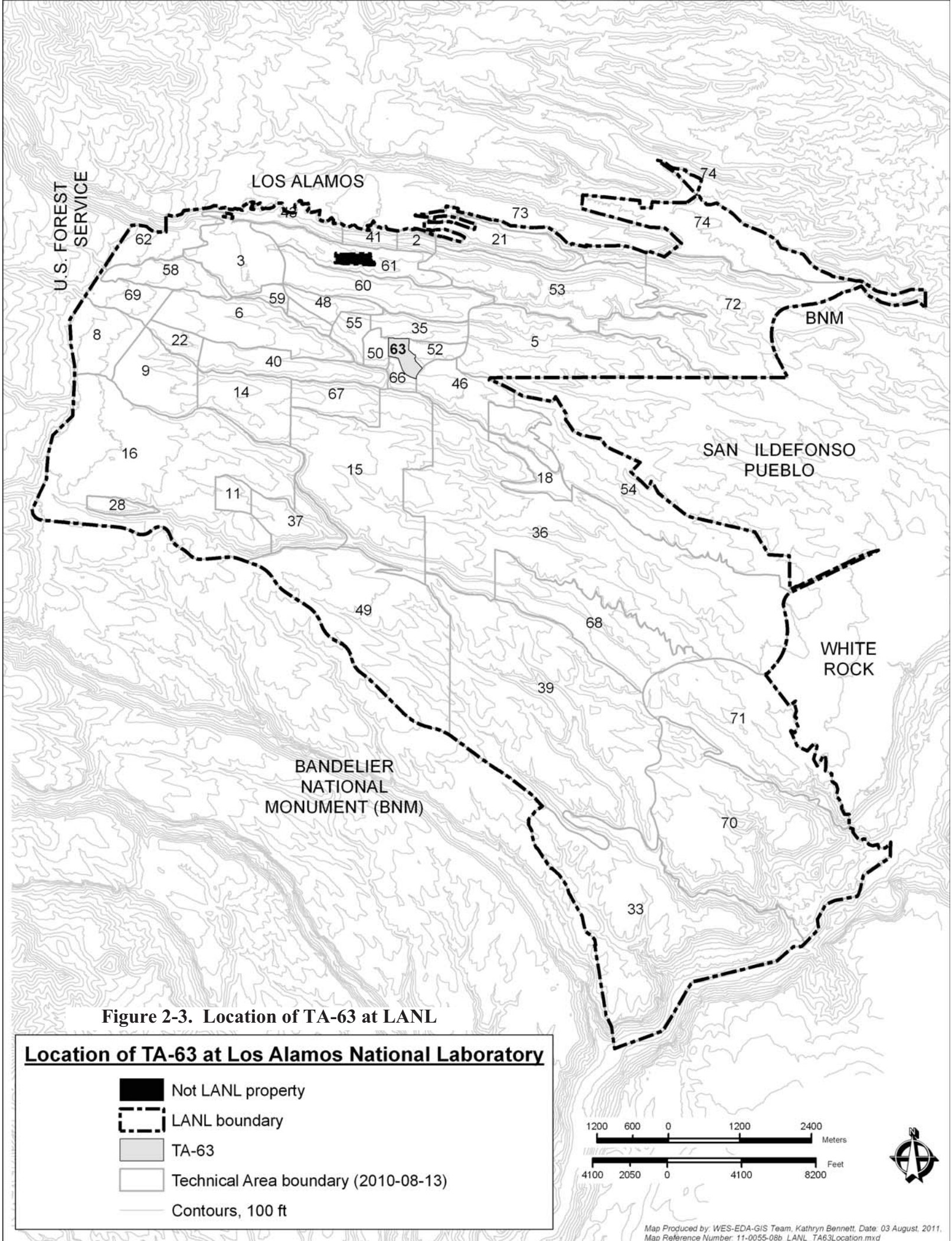

Figure 2-3. Location of TA-63 at LANL

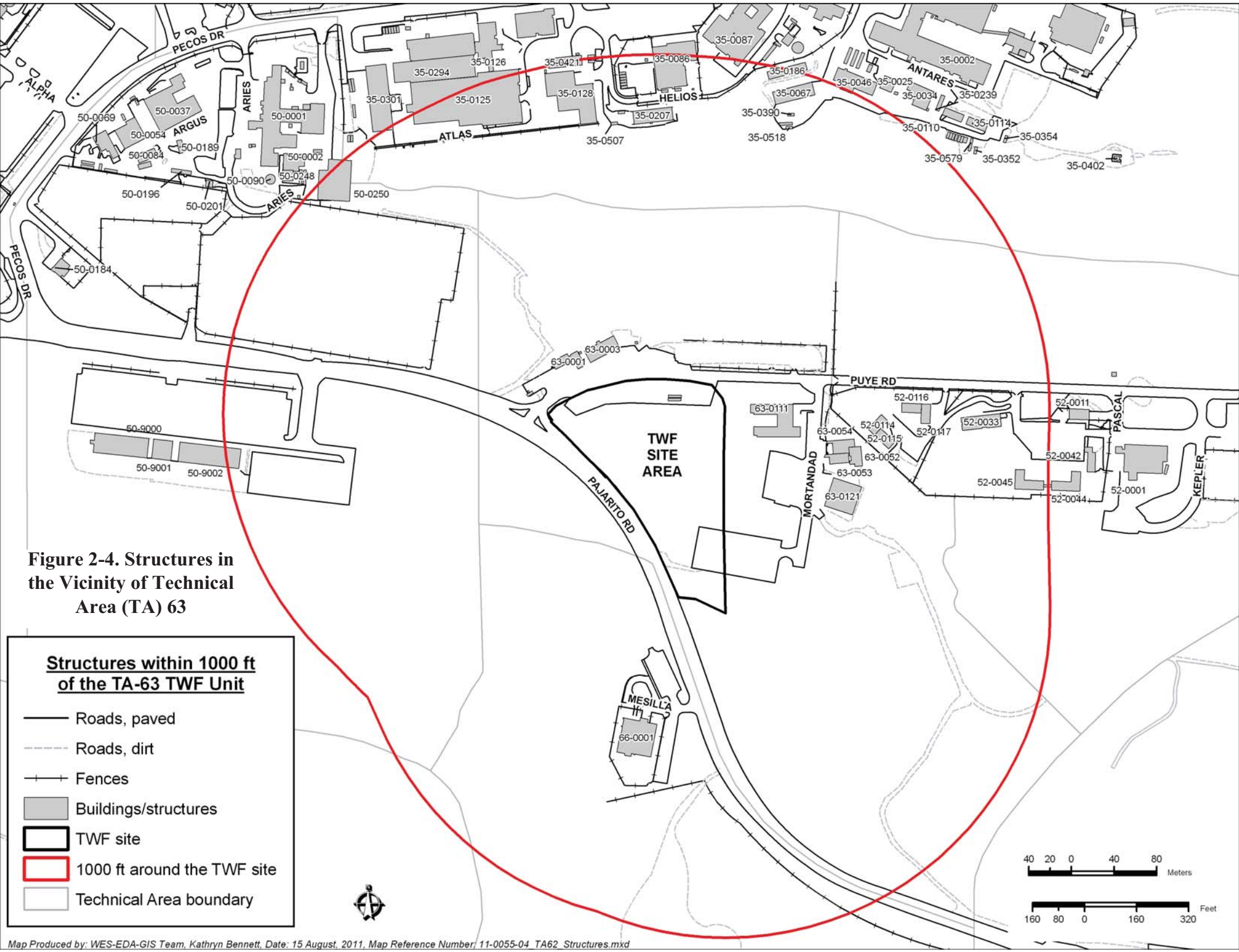

Figure 2-4. Structures in the Vicinity of Technical Area (TA) 63

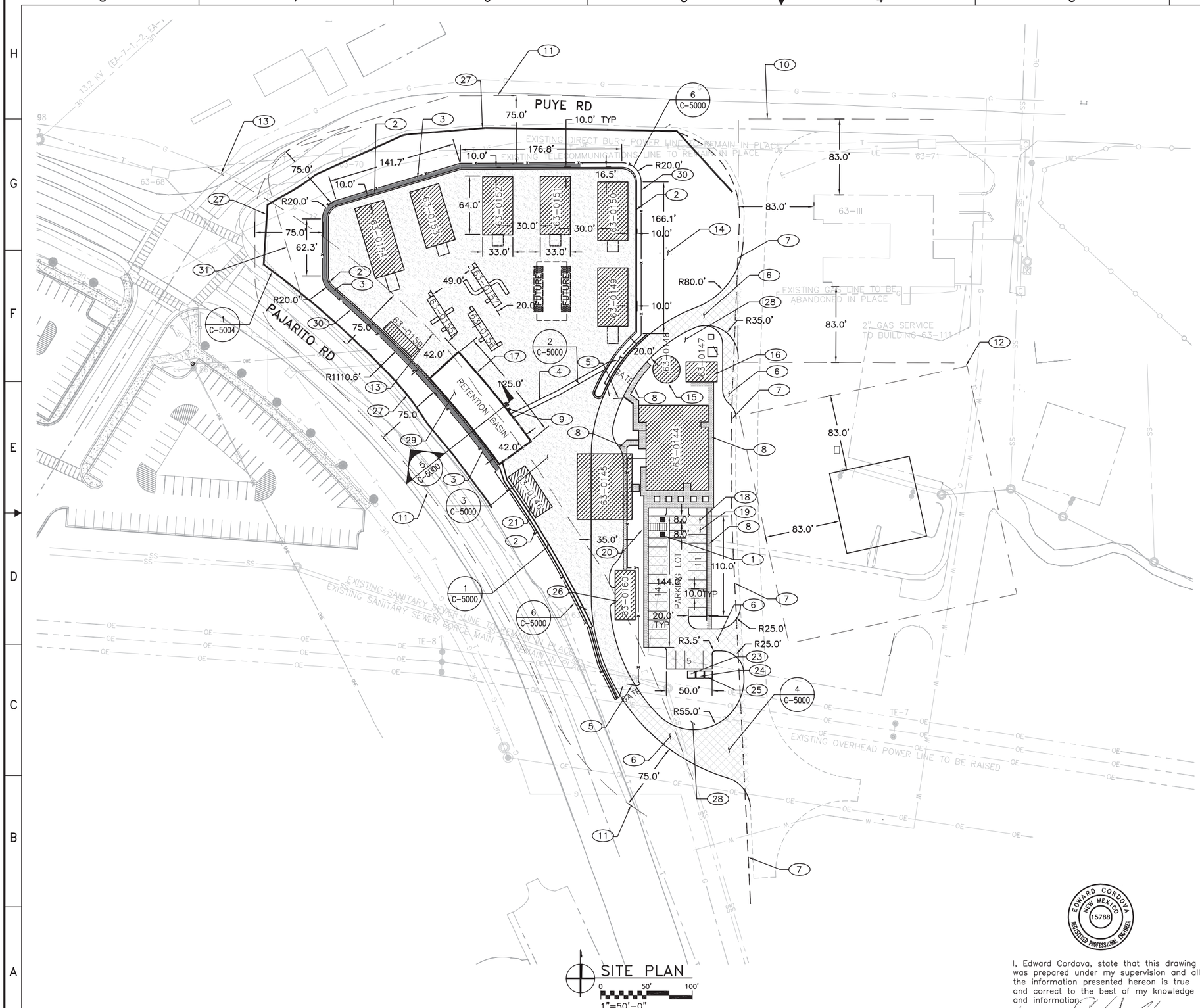

GENERAL NOTES

1. FIELD VERIFY ALL DIMENSIONS PRIOR TO CONSTRUCTION.
2. IF THIS SHEET IS NOT 24"x36", THEN IT IS A REDUCED SIZE PLOT. USE GRAPHIC SCALE ACCORDINGLY.
3. EXISTING UTILITY LOCATIONS ARE APPROXIMATE ONLY AND SHALL BE FIELD LOCATED PRIOR TO CONSTRUCTION.

KEYED NOTES

1. (2)HANDI-CAP ACCESS PARKING SPACES, (1) VAN ACCESSIBLE
2. 24" CURB AND GUTTER (6" HIGH)
3. RETAINING WALL TO BE BUILT PER TWF PHASE A
4. 5' CONCRETE VALLEY GUTTER
5. ACCESS CONTROL GATES
6. ASPHALT PAVEMENT, SEE DETAIL SHEET C-5000
7. LIMITS OF CONSTRUCTION (CMRR TO BUILD ROAD)
8. CONCRETE SIDEWALK
9. STORM WATER SAMPLE STATION
10. BUILDING TA-63-III SEPARATION DISTANCE
11. WILD FIRE DEFENSIBLE SPACE
12. CMRR 10-PLEX TRAILER SEPARATION DISTANCE ACTUAL LOCATION TO BE DETERMINED.
13. PAJARITO ROAD SET BACK
14. EXISTING MONITORING WELL TO REMAIN
15. FIRE WATER STORAGE TANK SEE SHEETS C-1007 & C-5002 FOR DETAILS
16. UTILITY BUILDING
17. BUILD 4' CHAIN LINK FENCE AROUND BASIN
18. HIGH OCCUPANCY VEHICLE PARKING SPACE
19. ALTERNATE VEHICLE PARKING SPACE
20. BICYCLE STORAGE AREA
21. FORKLIFT CHARGING STATION
22. CSMM STORAGE BUILDING
23. DUMPSTER RECEPTACLE
24. RECYCLABLES COLLECTION AREA (LEED)
25. CHEMICAL CLEANING SUPPLY STORAGE (LEED)
26. EQUIPMENT STORAGE SHED
27. K-12 VEHICULAR BARRIER
28. DISTURBED AREA TO BE SEEDED
29. RETENTION BASIN SEE SHEETS C-1008 & C-5003 FOR DETAILS
30. CHAIN LINK FENCE
31. 83' FOOT NATURAL GAS RESTRICTION ZONE. EXISTING GAS LINE TO BE CAPPED OUTSIDE THIS ZONE

NOT FOR CONSTRUCTION

PART B PERMIT APPLICATION

NO	DATE	CLASS REV	ADC	DESCRIPTION	DWN	DSGN	CHKD	SUB	APP

WEIDLINGER-NAVARRO JV NORTHERN NM

TRU WASTE FACILITY PROJECT

Figure 2-5. TA-63 Site Plan

DRAWN	D PADILLA
DESIGN	J RAEL
CHECKED	E CORDOVA
DATE	.....

BLDG TA-63

SUBMITTED

APPROVED FOR RELEASE

Los Alamos NATIONAL LABORATORY
PO Box 1663
Los Alamos, New Mexico 87545

SHEET C-1000

5 OF 283

CLASSIFICATION XXX | REVIEWER XXX | DATE

PROJECT ID 102355 | DRAWING NO C55443 | REV D

EDWARD CORDOVA NEW MEXICO 15788 REGISTERED PROFESSIONAL ENGINEER

I, Edward Cordova, state that this drawing was prepared under my supervision and all the information presented hereon is true and correct to the best of my knowledge and information.

7/13/11
Date

Edward Cordova, NM P.E. 15788

M:\TRN\10-100-205-05\CADD\SHEETS\C-1000.DWG-7/11/2011 1:07 PM

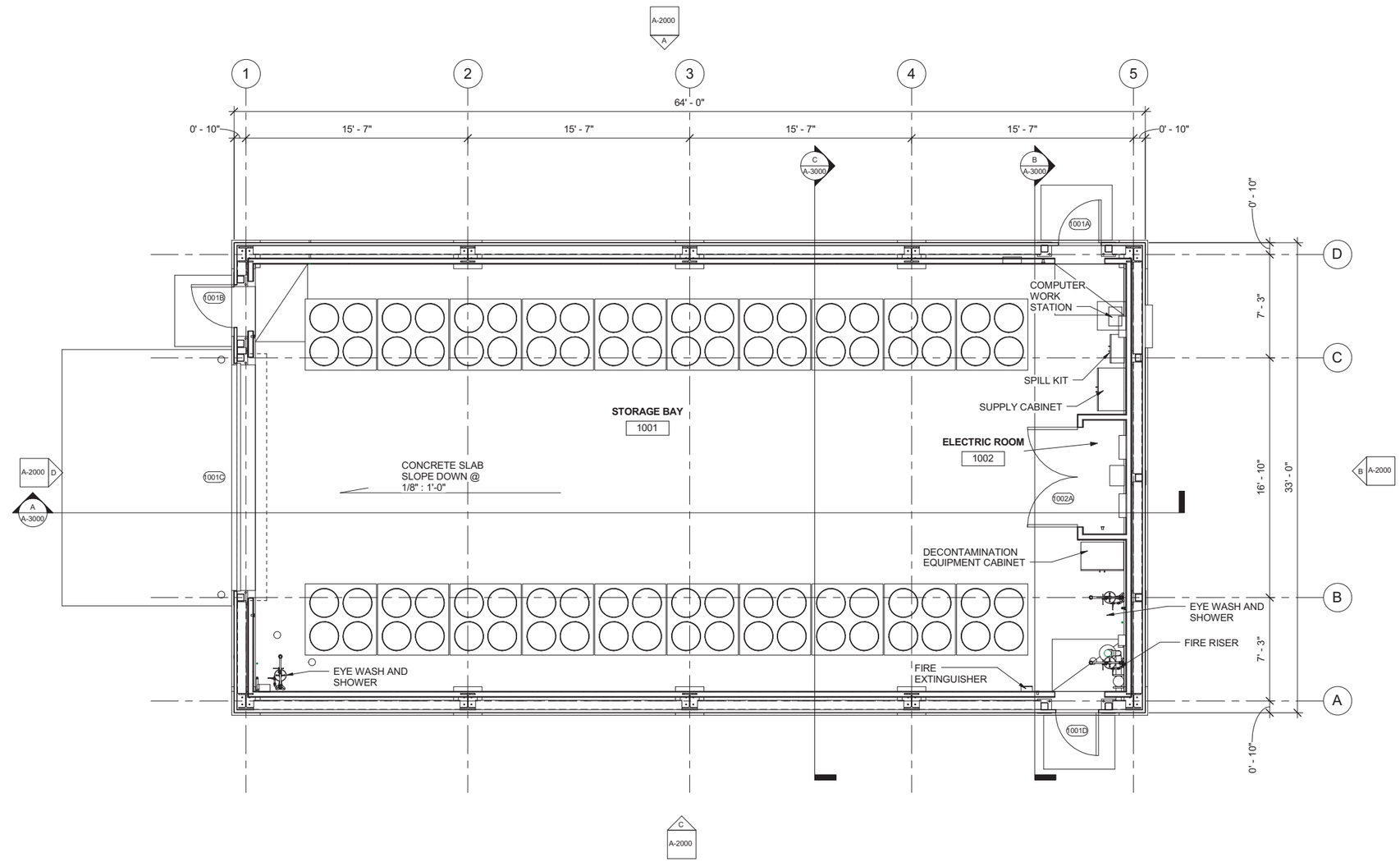

GENERAL NOTES

1. IF THIS SHEET IS NOT 24" x 36", THEN IT IS A REDUCED SIZE PLOT. USE GRAPHIC SCALE ACCORDINGLY.
2. THIS DRAWING WAS GENERATED IN REVIT 2011 AND DOES NOT FOLLOW LANL DRAFTING STANDARDS.

FLOOR PLAN

0 1' 2' 4' 6' 8'
1/4"=1'-0"

NOT FOR CONSTRUCTION
PART B PERMIT APPLICATION

NO	DATE	CLASS REV	ADC	DESCRIPTION	DWN	DSGN	CHKD	SUB	APP

WEIDLINGER-NAVARRO JV NORTHERN NM

TRU WASTE FACILITY PROJECT

Figure 2-6. Storage Buildings Floor Plan

DRAWN	A. GALLEGOS
DESIGN	D. WALLERSTEDT
CHECKED	T. LEACH
DATE	07-15-11

BL

SUBMITTED | APPROVED FOR RELEASE

STATE OF NEW MEXICO
DAVID L. WALLERSTEDT
NO. 3132
REGISTERED ARCHITECT

I, David L. Wallerstedt, state that this drawing was prepared under my supervision and all the information presented hereon is true and correct to the best of my knowledge and information.

7-13-11
Date

David L. Wallerstedt, NM R.A. 3132

Los Alamos NATIONAL LABORATORY
PO Box 1663
Los Alamos, New Mexico 87545

SHEET A-1001

153 OF 283

CLASSIFICATION	REVIEWER	DATE
PROJECT ID 102355	DRAWING NO C55444	REV D

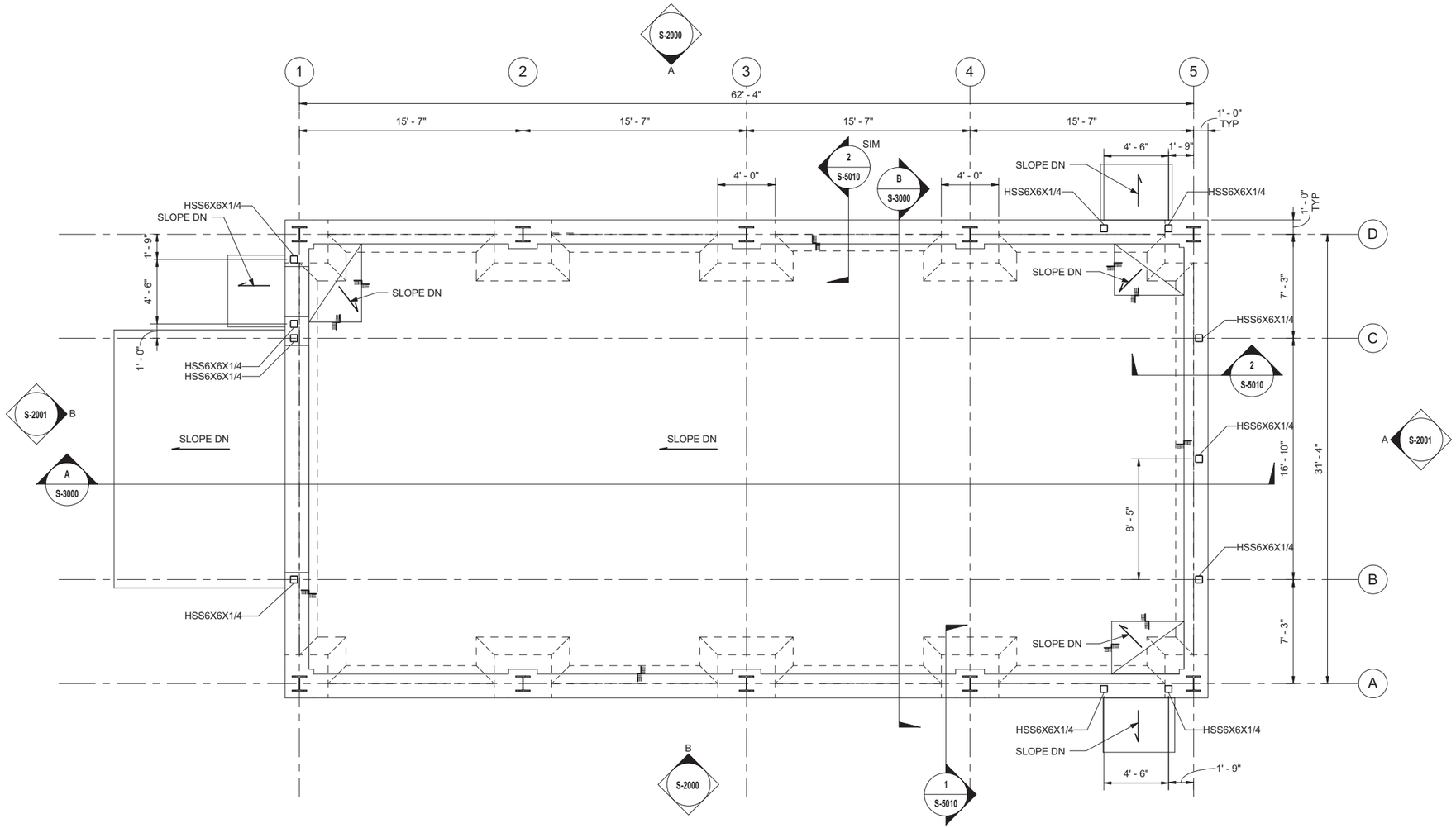

FOUNDATION PLAN

0 1' 2' 4' 6' 8'
1/4"=1'-0"

GENERAL NOTES

1. ABBREVIATIONS AND LEGEND ARE LOCATED ON SHEET S-0001 AND GENERAL STRUCTURAL NOTES ARE LOCATED ON SHEET S-0002.
2. TYPICAL DETAILS ARE LOCATED ON SHEET S-5000.
3. FINISH FLOOR REFERENCE ELEVATION 100'-0" FOR 63-0152 AND 63-0153 = 7217.25', 63-0151 AND 63-0150 = 7217.00', 63-0149 = 7215.75'.
4. FLOOR SLOPE = 1/8" PER 1'-0".
5. SEE CIVIL PLANS FOR EXTERIOR SLAB AND PAVING.
6. SEE SOILS REPORT FOR UNDER SLAB AND FOOTING REQUIREMENTS.
7. IF THIS SHEET IS NOT 24"x36", THEN IT IS A REDUCED SIZE PLOT. USE GRAPHIC SCALE ACCORDINGLY.
8. THIS DRAWING WAS GENERATED IN REVIT 2011 AND DOES NOT FOLLOW LANL DRAFTING STANDARDS.

KEYED NOTES

(1) 12" MAT SLAB WITH #5@12"O.C. EACH WAY, TOP AND BOTTOM. REFERENCE FINISH FLOOR ELEVATION = 100'-0" U.O.N. ACTUAL FINISH FLOOR ELEVATION FOR 63-0152 AND 63-0153 = 7217.25', 63-0150 AND 63-0151 = 7217.00', 63-0149 = 7215.75'.

NOT FOR CONSTRUCTION
PART B PERMIT APPLICATION

JAMES M. WEEKS NEW MEXICO 11384 REGISTERED PROFESSIONAL ENGINEER

I, James M. Weeks, state that this drawing was prepared under my supervision and all the information presented hereon is true and correct to the best of my knowledge and information.

7/13/11
Date

James M. Weeks, NM P.E. 11384

NO	DATE	CLASS REV	ADC	DESCRIPTION	DWN	DSGN	CHKD	SUB	APP

WEIDLINGER-NAVARRO JV NORTHERN NM

TRU WASTE FACILITY PROJECT

Figure 2-7. Storage Buildings Foundation Plan

DRAWN	G.FLORES
DESIGN	J.WEEKS
CHECKED	C.ROSENBERGER
DATE	07-15-11

BLDG 63-0149 TO 63-0153 TA- 63

SUBMITTED

APPROVED FOR RELEASE

Los Alamos NATIONAL LABORATORY PO Box 1663 Los Alamos, New Mexico 87545

SHEET S-1000

143 OF 276

CLASSIFICATION

REVIEWER

DATE

PROJECT ID 102355

DRAWING NO C55444

REV D

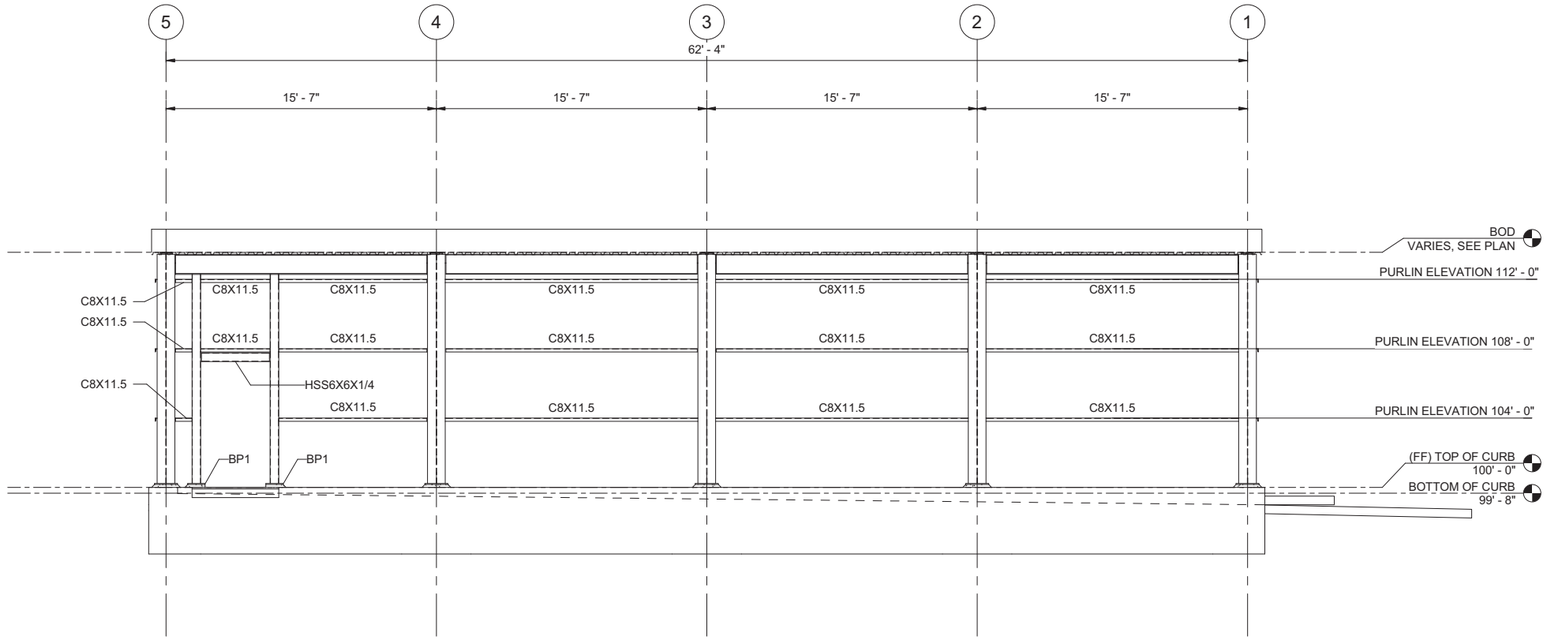

A S-1000 **WEST ELEVATION**

0 1' 2' 4' 6' 8'
1/4"=1'-0"

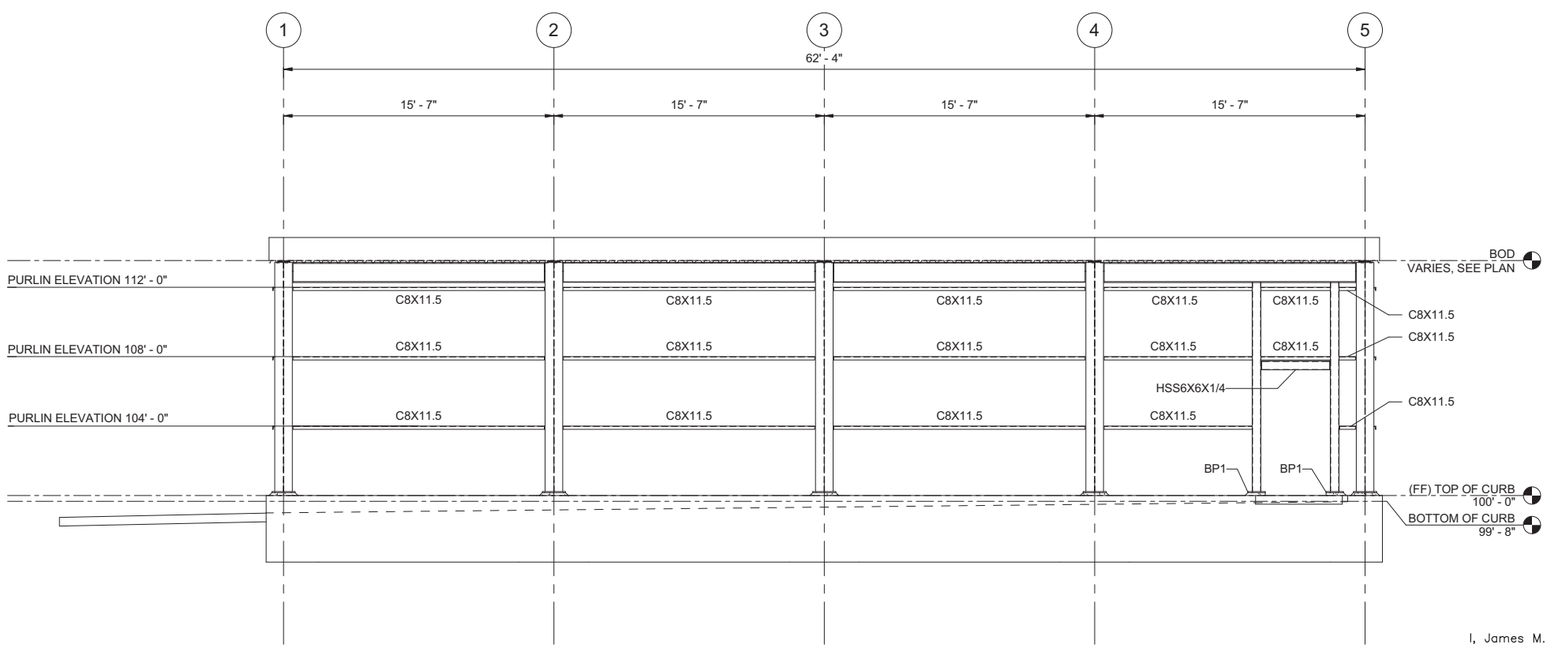

B S-1000 **EAST ELEVATION**

0 1' 2' 4' 6' 8'
1/4"=1'-0"

GENERAL NOTES

1. ABBREVIATIONS AND LEGEND ARE LOCATED ON SHEET S-0001 AND GENERAL STRUCTURAL NOTES ARE LOCATED ON SHEET S-0002.
2. TYPICAL DETAILS ARE LOCATED ON SHEET S-5000.
3. BASE PLATE SCHEDULE IS LOCATED IN DETAIL 1/S-5000.
4. FINISH FLOOR REFERENCE ELEVATION 100'-0" FOR 63-0152 AND 63-0153 = 7217.25', 63-0151 AND 63-0150 = 7217.00', 63-0149 = 7215.75'.
5. IF THIS SHEET IS NOT 24"x36", THEN IT IS A REDUCED SIZE PLOT. USE GRAPHIC SCALE ACCORDINGLY.
6. THIS DRAWING WAS GENERATED IN REVIT 2011 AND DOES NOT FOLLOW LANL DRAFTING STANDARDS.

JAMES M. WEEKS NEW MEXICO 11384 REGISTERED PROFESSIONAL ENGINEER

I, James M. Weeks, state that this drawing was prepared under my supervision and all the information presented hereon is true and correct to the best of my knowledge and information.

7/15/11
Date

James M. Weeks, NM P.E. 11384

NOT FOR CONSTRUCTION
PART B PERMIT APPLICATION

NO	DATE	CLASS REV	ADC	DESCRIPTION	DWN	DSGN	CHKD	SUB	APP

WEIDLINGER-NAVARRO JV NORTHERN NM

TRU WASTE FACILITY PROJECT

Figure 2-8. Storage Buildings Structural Elevations

DRAWN	G.FLORES
DESIGN	J.WEEKS
CHECKED	C.ROSENBERGER
DATE	07-15-11

BLDG 63-0149 TO 63-0153 TA- 63

SUBMITTED | APPROVED FOR RELEASE

Los Alamos NATIONAL LABORATORY PO Box 1663 Los Alamos, New Mexico 87545

SHEET S-2000

145 OF 276

CLASSIFICATION | REVIEWER | DATE

PROJECT ID 102355 | DRAWING NO C55444 | REV D

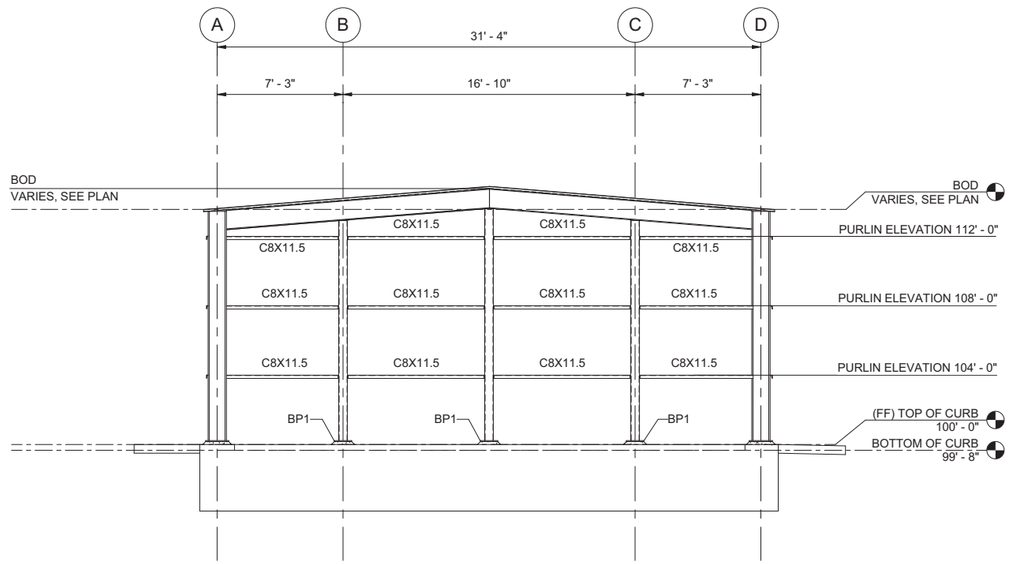

A S-1000 **NORTH ELEVATION**

0 1' 2' 4' 6' 8'
1/4"=1'-0"

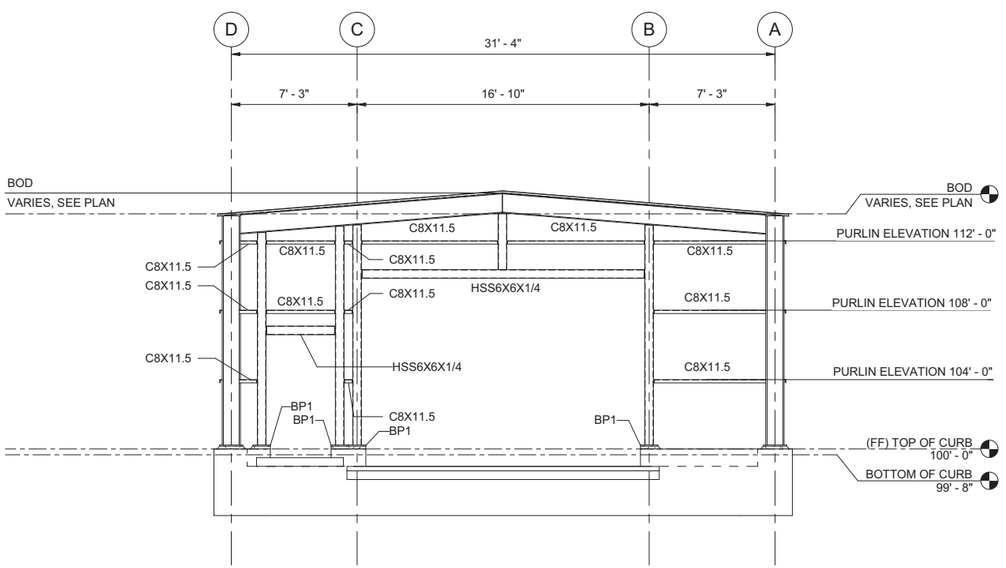

B S-1000 **SOUTH ELEVATION**

0 1' 2' 4' 6' 8'
1/4"=1'-0"

GENERAL NOTES

1. ABBREVIATIONS AND LEGEND ARE LOCATED ON SHEET S-0001 AND GENERAL STRUCTURAL NOTES ARE LOCATED ON SHEET S-0002.
2. TYPICAL DETAILS ARE LOCATED ON SHEET S-5000.
3. BASE PLATE SCHEDULE IS LOCATED IN DETAIL 1/S-5000.
4. FINISH FLOOR REFERENCE ELEVATION 100'-0" FOR 63-0152 AND 63-0153 = 7217.25', 63-0151 AND 63-0150 = 7217.00', 63-0149 = 7215.75'.
5. IF THIS SHEET IS NOT 24"x36", THEN IT IS A REDUCED SIZE PLOT. USE GRAPHIC SCALE ACCORDINGLY.
6. THIS DRAWING WAS GENERATED IN REVIT 2011 AND DOES NOT FOLLOW LANL DRAFTING STANDARDS.

NOT FOR CONSTRUCTION
PART B PERMIT APPLICATION

JAMES M. WEEKS NEW MEXICO 11384 REGISTERED PROFESSIONAL ENGINEER

I, James M. Weeks, state that this drawing was prepared under my supervision and all the information presented hereon is true and correct to the best of my knowledge and information.

7/15/11
Date

James M. Weeks, NM P.E. 11384

NO	DATE	CLASS REV	ADC	DESCRIPTION	DWN	DSGN	CHKD	SUB	APP

WEIDLINGER-NAVARRO JV NORTHERN NM

TRU WASTE FACILITY PROJECT

Figure 2-9. Storage Buildings Structural Elevations

DRAWN	G.FLORES
DESIGN	J.WEEKS
CHECKED	C.ROSENBERGER
DATE	07-15-11

BLDG 63-0149 TO 63-0153 TA- 63

SUBMITTED | APPROVED FOR RELEASE

Los Alamos NATIONAL LABORATORY PO Box 1663 Los Alamos, New Mexico 87545

SHEET S-2001

146 OF 276

CLASSIFICATION | REVIEWER | DATE

PROJECT ID 102355 | DRAWING NO C55444 | REV D

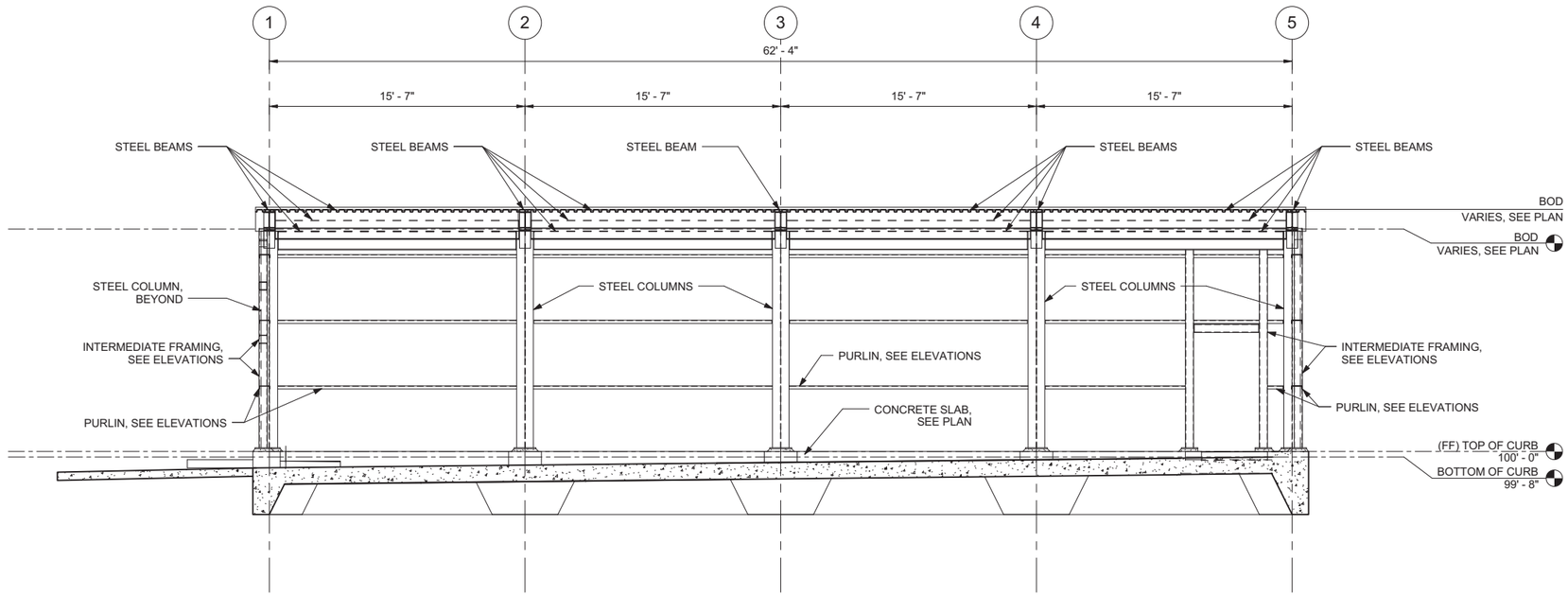

A S-1000 **SECTION**

0 1' 2' 4' 6' 8'
1/4"=1'-0"

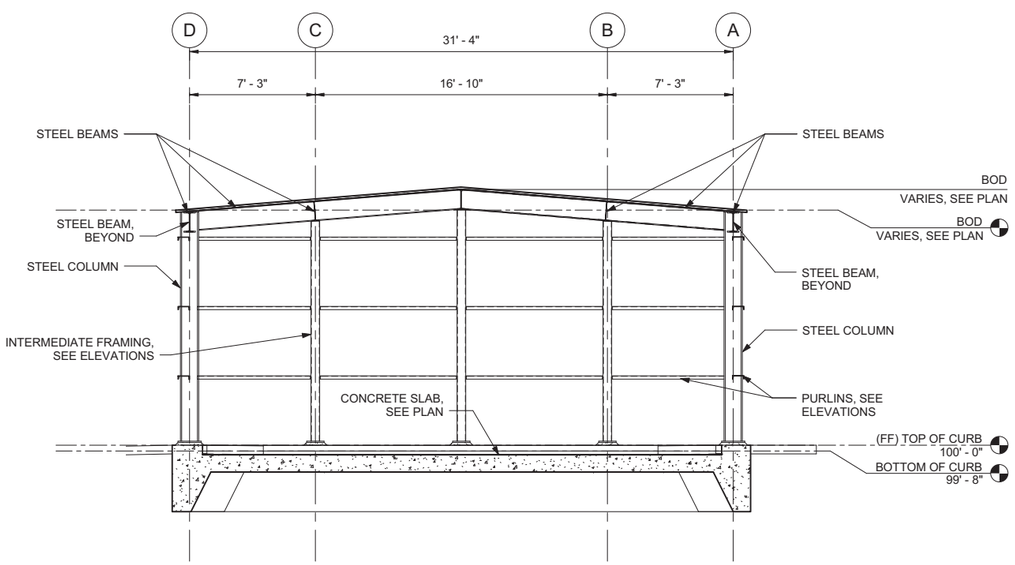

B S-1000 **SECTION**

0 1' 2' 4' 6' 8'
1/4"=1'-0"

GENERAL NOTES

1. ABBREVIATIONS AND LEGEND ARE LOCATED ON SHEET S-0001 AND GENERAL STRUCTURAL NOTES ARE LOCATED ON SHEET S-0002.
2. TYPICAL DETAILS ARE LOCATED ON SHEET S-5000.
3. FINISH FLOOR REFERENCE ELEVATION 100'-0" FOR 63-0152 AND 63-0153 = 7217.25', 63-0151 AND 63-0150 = 7217.00', 63-0149 = 7215.75'.
4. IF THIS SHEET IS NOT 24"x36", THEN IT IS A REDUCED SIZE PLOT. USE GRAPHIC SCALE ACCORDINGLY.
5. THIS DRAWING WAS GENERATED IN REVIT 2011 AND DOES NOT FOLLOW LANL DRAFTING STANDARDS.

JAMES M. WEEKS NEW MEXICO 11384 REGISTERED PROFESSIONAL ENGINEER

I, James M. Weeks, state that this drawing was prepared under my supervision and all the information presented hereon is true and correct to the best of my knowledge and information.

7/15/11
Date

James M. Weeks, NM P.E. 11384

NOT FOR CONSTRUCTION
PART B PERMIT APPLICATION

NO	DATE	CLASS REV	ADC	DESCRIPTION	DWN	DSGN	CHKD	SUB	APP

WEIDLINGER-NAVARRO JV NORTHERN NM

TRU WASTE FACILITY PROJECT

Figure 2-10. Storage Buildings Structural Sections

DRAWN	G.FLORES
DESIGN	J.WEEKS
CHECKED	C.ROSENBERGER
DATE	07-15-11

B

SUBMITTED

APPROVED FOR RELEASE

Los Alamos NATIONAL LABORATORY PO Box 1663 Los Alamos, New Mexico 87545

SHEET S-3000

147 OF 276

CLASSIFICATION | REVIEWER | DATE

PROJECT ID 102355 | DRAWING NO C55444 | REV D

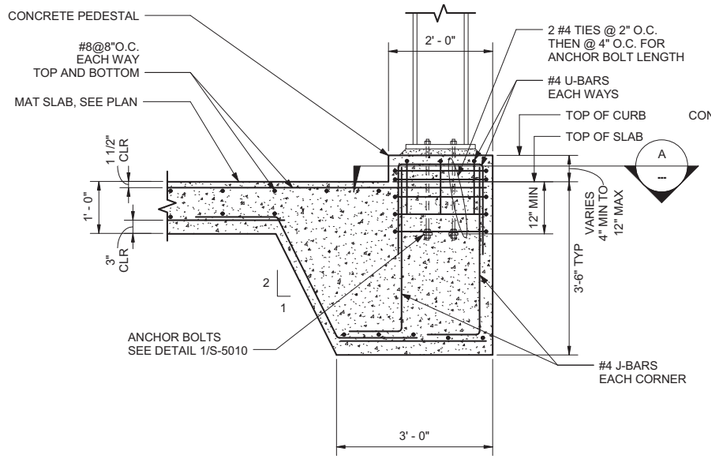

NOTE: FOR EXCAVATION REQUIREMENTS SEE DETAIL 2/S-5000.

1 / S-1000 THICKENED COLUMN MAT

1' 6" 0 1' 2'
3/4"=1'-0"

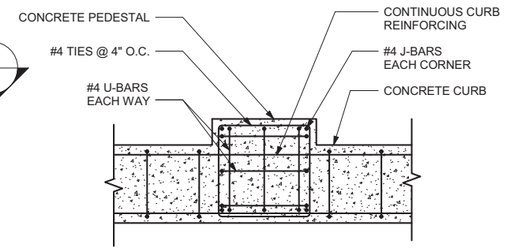

NOTE: SIM @ CORNER CONDITIONS

A PLAN

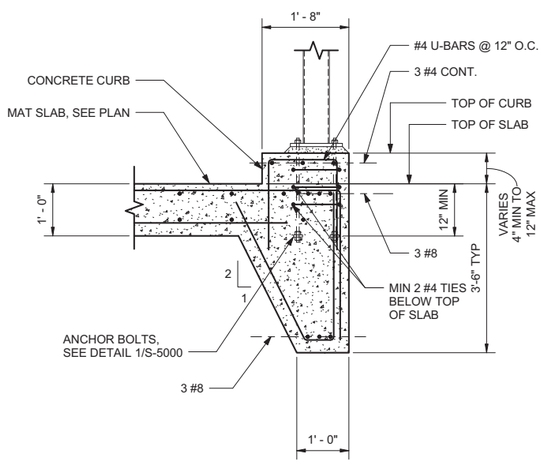

NOTE: FOR EXCAVATION REQUIREMENTS SEE DETAIL 2/S-5000.

2 / S-1000 MAT SLAB TURN DOWN

1' 6" 0 1' 2'
3/4"=1'-0"

GENERAL NOTES

1. ABBREVIATIONS AND LEGEND ARE LOCATED ON SHEET S-0001 AND GENERAL STRUCTURAL NOTES ARE LOCATED ON SHEET S-0002.
2. TYPICAL DETAILS ARE LOCATED ON SHEET S-5000.
3. FINISH FLOOR REFERENCE ELEVATION 100'-0" FOR 63-0152 AND 63-0153 = 7217.25', 63-0151 AND 63-0150 = 7217.00', 63-0149 = 7215.75'.
4. IF THIS SHEET IS NOT 24"x36", THEN IT IS A REDUCED SIZE PLOT. USE GRAPHIC SCALE ACCORDINGLY.
5. THIS DRAWING WAS GENERATED IN REVIT 2011 AND DOES NOT FOLLOW LANL DRAFTING STANDARDS.

JAMES M. WEEKS NEW MEXICO 11384 REGISTERED PROFESSIONAL ENGINEER

I, James M. Weeks, state that this drawing was prepared under my supervision and all the information presented hereon is true and correct to the best of my knowledge and information.

7/15/11
Date

James M. Weeks, NM P.E. 11384

NOT FOR CONSTRUCTION
PART B PERMIT APPLICATION

NO	DATE	CLASS REV	ADC	DESCRIPTION	DWN	DSGN	CHKD	SUB	APP

WEIDLINGER-NAVARRO JV NORTHERN NM

TRU WASTE FACILITY PROJECT

Figure 2-11 Storage Buildings Foundation Details

DRAWN	G.FLORES
DESIGN	J.WEEKS
CHECKED	C.ROSENBERGER
DATE	07-15-11

BLDG 63-0149 TO 63-0153 TA- 63

SUBMITTED | APPROVED FOR RELEASE

Los Alamos NATIONAL LABORATORY PO Box 1663 Los Alamos, New Mexico 87545

SHEET S-5010

149 OF 276

CLASSIFICATION | REVIEWER | DATE

PROJECT ID 102355 | DRAWING NO C55444 | REV D

GENERAL NOTES

1. IF THIS SHEET IS NOT 24" X 36", THEN IT IS A REDUCED SIZE PLOT. USE GRAPHIC SCALE ACCORDINGLY.
2. THIS DRAWING WAS GENERATED IN REVIT 2011 AND DOES NOT FOLLOW LANL DRAFTING STANDARDS.

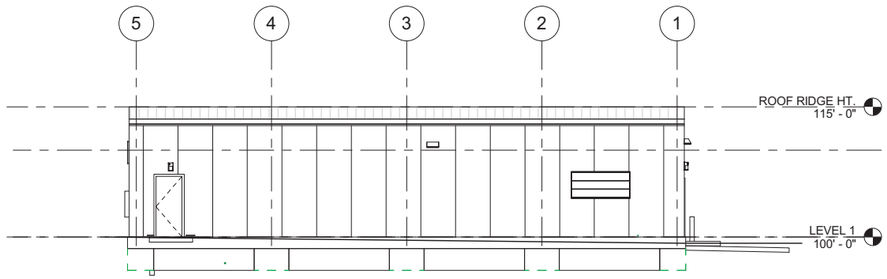

A A-1001 **WEST ELEVATION**

4' 2' 0 4' 8' 12'
1/8"=1'-0"

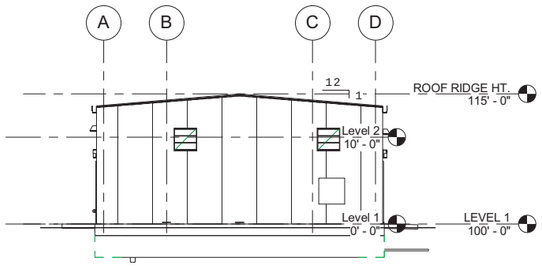

B A-1001 **NORTH ELEVATION**

4' 2' 0 4' 8' 12'
1/8"=1'-0"

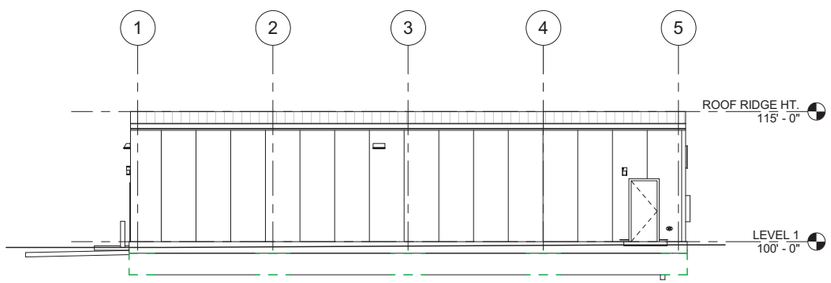

C A-1001 **EAST ELEVATION**

4' 2' 0 4' 8' 12'
1/8"=1'-0"

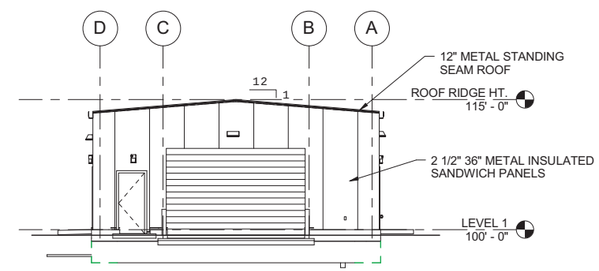

D A-1001 **SOUTH ELEVATION**

4' 2' 0 4' 8' 12'
1/8"=1'-0"

NOT FOR CONSTRUCTION
PART B PERMIT APPLICATION

NO	DATE	CLASS REV	ADC	DESCRIPTION	DWN	DSGN	CHKD	SUB	APP

WEIDLINGER-NAVARRO JV NORTHERN NM

TRU WASTE FACILITY PROJECT

Figure 2-12. Storage Buildings Elevations

DRAWN	A. GALLEGOS
DESIGN	D. WALLERSTEDT
CHECKED	T. LEACH
DATE	07-15-11

BLDG 63-0149 TO 63-0153 **TA-** 63

SUBMITTED | APPROVED FOR RELEASE

Los Alamos NATIONAL LABORATORY PO Box 1663 Los Alamos, New Mexico 87545

SHEET A-2000

154 OF 283

CLASSIFICATION | REVIEWER | DATE

PROJECT ID 102355 | DRAWING NO C55444 | REV D

STATE OF NEW MEXICO
DAVID L. WALLERSTEDT
NO. 3132
REGISTERED ARCHITECT

I, David L. Wallerstedt, state that this drawing was prepared under my supervision and all the information presented hereon is true and correct to the best of my knowledge and information.

7-13-11
Date

David L. Wallerstedt, NM R.A. 3132

GENERAL NOTES

A. IF THIS SHEET IS NOT 24"x36", THEN IT IS A REDUCED SIZE PLOT. USE GRAPHIC SCALE ACCORDINGLY.
B. THIS DRAWING WAS GENERATED IN REVIT 2011 AND DOES NOT FOLLOW LANL DRAFTING STANDARDS.
C. SEE SHEET F-0001 FOR SYMBOLS, LEGEND, ABBREVIATION AND STRUCTURAL BRACING INFORMATION.

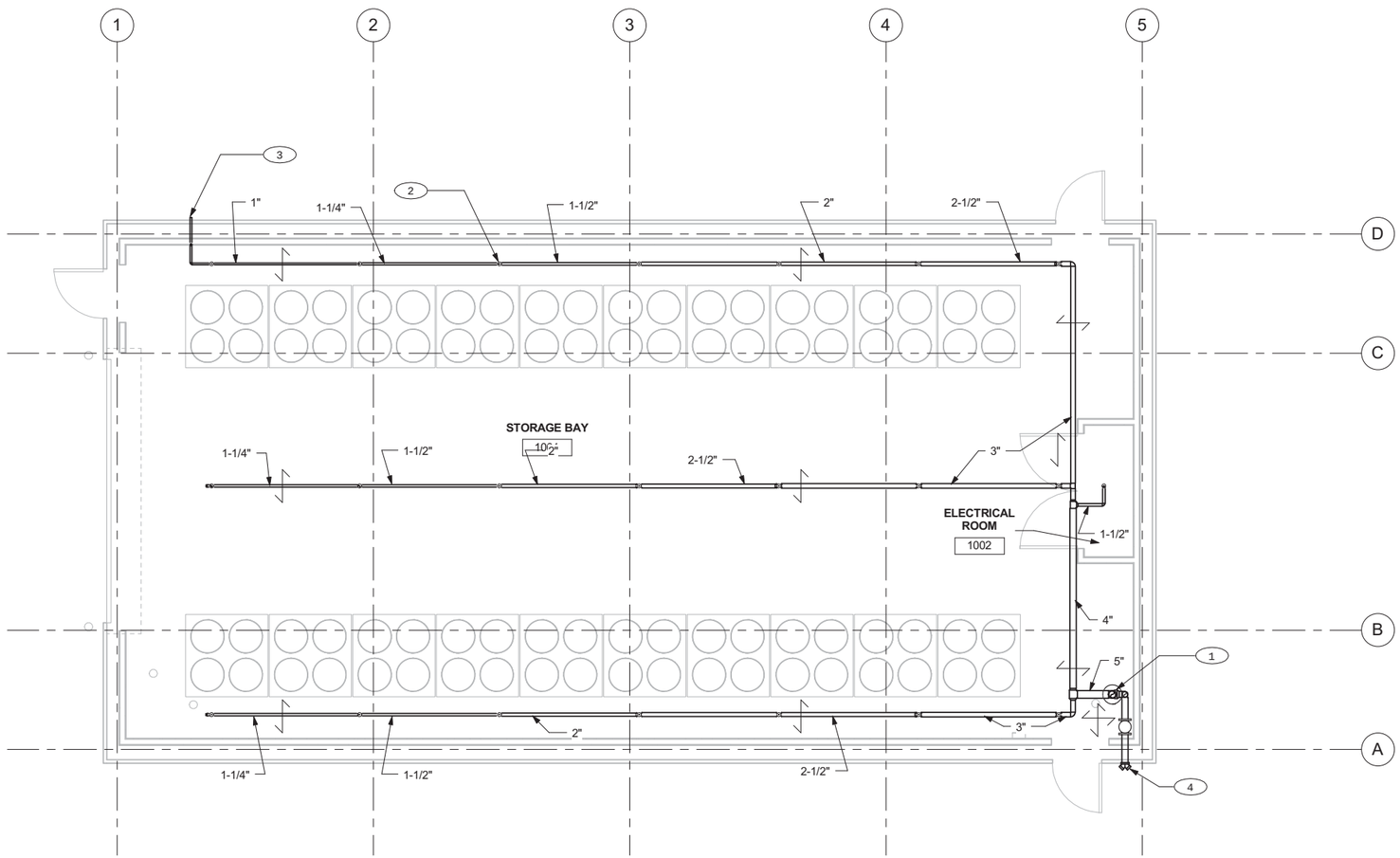

KEYED NOTES

1. FIRE PROTECTION RISER, SEE DETAIL 1 ON SHEET F-5000.
2. UPRIGHT SPRINKLER, TYPICAL OF 18.
3. INSPECTOR'S TEST STATION.
4. FIRE DEPARTMENT CONNECTION.

FIRE PROTECTION PLAN

0 1' 2' 4' 6' 8'
1/4"=1'-0"

NOT FOR CONSTRUCTION
PART B PERMIT APPLICATION

NO	DATE	CLASS REV	ADC	DESCRIPTION	DWN	DSGN	CHKD	SUB	APP

WEIDLINGER-NAVARRO JV NORTHERN NM

TRU WASTE FACILITY PROJECT

Figure 2-13. Storage Buildings Fire Protection Plan

DRAWN	D.BROERMAN
DESIGN	E. MIYODA
CHECKED	C. MOYERS
DATE	07-15-11

BLDG 63-0149 T0 63-0153 TA- 63

SUBMITTED | APPROVED FOR RELEASE

Los Alamos NATIONAL LABORATORY PO Box 1663 Los Alamos, New Mexico 87545

SHEET F-1000
159 OF 283

CLASSIFICATION | REVIEWER | DATE

PROJECT ID 102355 | DRAWING NO C55444 | REV D

EDWARD M. MIYODA NEW MEXICO 8263 REGISTERED PROFESSIONAL ENGINEER

I, Edward M. Miyoda, state that this drawing was prepared under my supervision and all the information presented hereon is true and correct to the best of my knowledge and information.

7-13-11 Edward Miyoda
Date Edward M. Miyoda, NM P.E. 8263

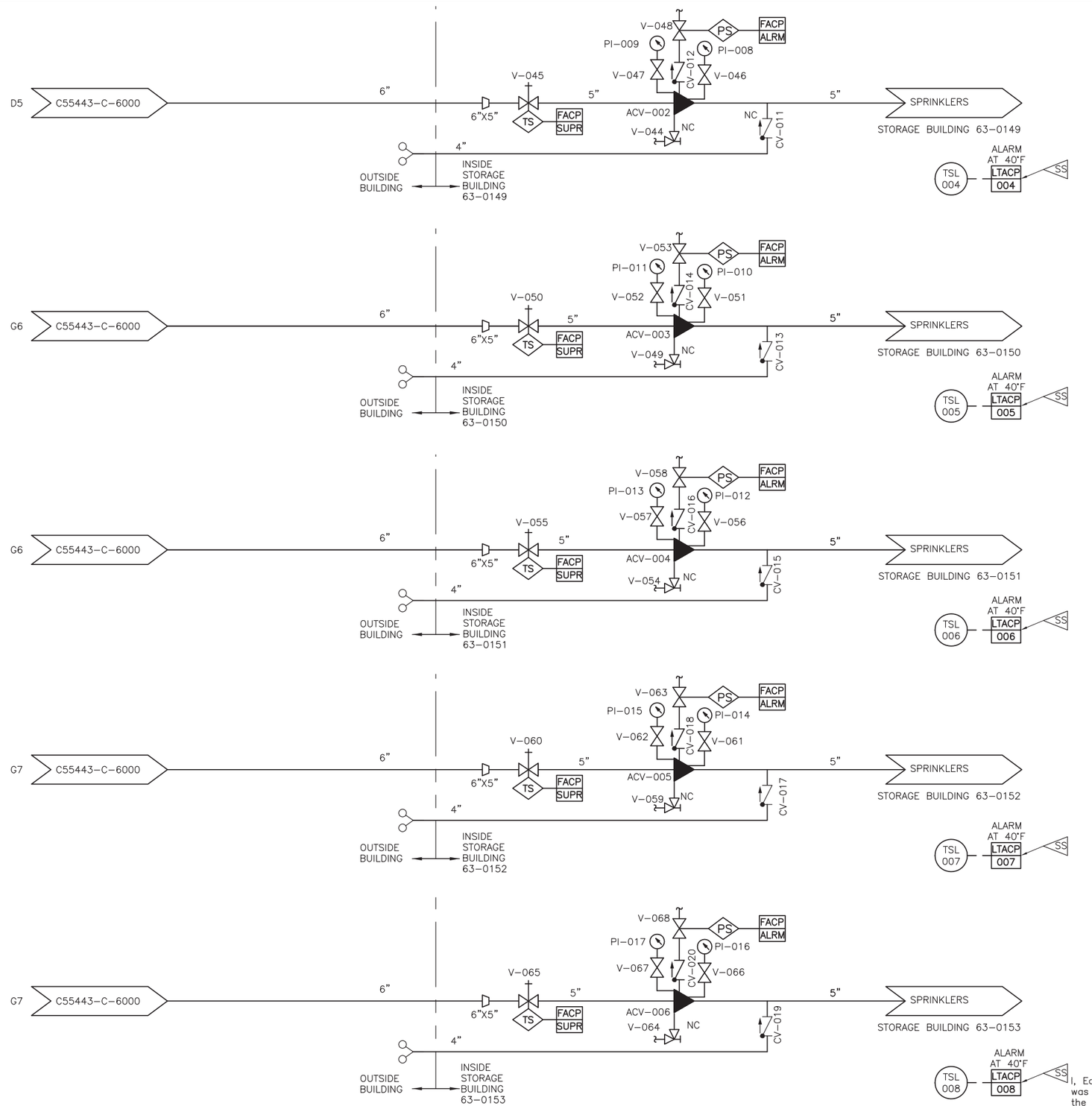

FIRE PROTECTION P&ID

SCALE: NONE

I, Edward M. Miyoda, state that this drawing was prepared under my supervision and all the information presented hereon is true and correct to the best of my knowledge and information.

7-15-11 Edward Miyoda
Date Edward M. Miyoda, NM P.E. 8263

NOT FOR CONSTRUCTION
PART B PERMIT APPLICATION

NO	DATE	CLASS REV	ADC	DESCRIPTION	DWN	DSGN	CHKD	SUB	APP

WEIDLINGER-NAVARRO JV NORTHERN NM

TRU WASTE FACILITY PROJECT
Figure 2-14. Storage Buildings Fire Protection P & IDS

BLDG 63-0149 TO 63-0153 TA-63

DRAWN	D. JENSEN
DESIGN	C. MOYERS
CHECKED	E. MIYODA
DATE	07-15-11

SUBMITTED | APPROVED FOR RELEASE

Los Alamos NATIONAL LABORATORY
P0 Box 1663
Los Alamos, New Mexico 87545

SHEET F-6000
162 OF 283

CLASSIFICATION XXX | REVIEWER XXX | DATE

PROJECT ID 102355 | DRAWING NO C55444 | REV D

File Location: P:_TECHNOLOGY\LANL\102355 - TRU WASTE FACILITY\500 CAD\STORAGE BLDGS\M-P-FIRE\ACAD\SHEET FILES\F-6000.DWG
Plotted By: BROEMAN, DARLENE; Plot Date: Tuesday, July 12, 2011; Plot CTB File: LANL D-SIZE.CTB; Page Setup Name: PDF; InstUnits: 1; LTScale: 1.000000 Measurement: 0;

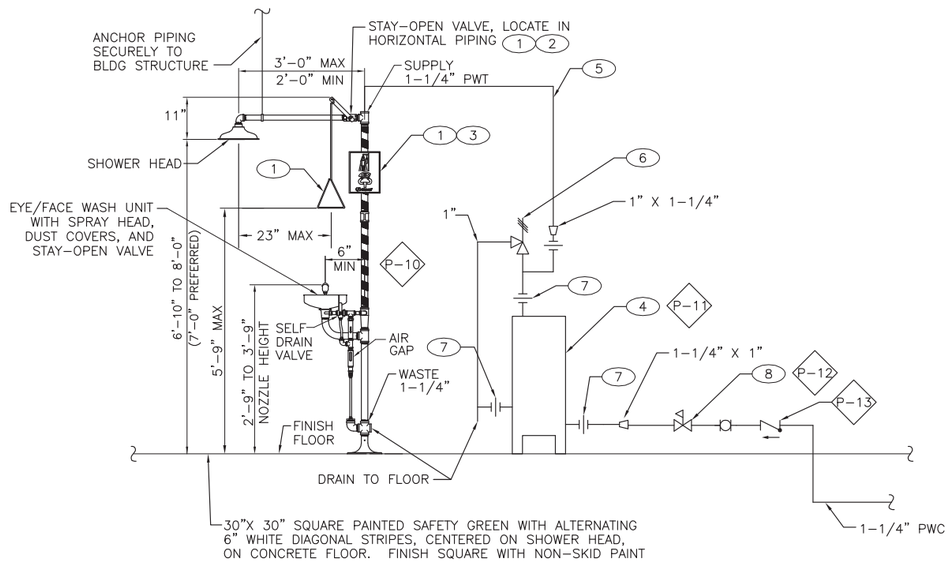

1 / P-1000 SAFETY SHOWER W/EYEWASH DETAIL
SCALE: NONE

KEYED NOTES:

1. FURNISHED WITH EMERGENCY EQUIPMENT.
2. VALVE TO BE ACCESSIBLE FOR MAINTENANCE.
3. EMERGENCY SIGN(S).
4. ELECTRIC SAFETY SHOWER TEPID WATER HEATER.
5. TEPID WATER SUPPLY.
6. TEMPERATURE AND PRESSURE RELIEF VALVE.
7. PROVIDE DIELECTRIC UNION AT POINTS OF DISSIMILAR METALS.
8. PRESSURE REDUCING VALVE.

NOT FOR CONSTRUCTION
PART B PERMIT APPLICATION

EDWARD M. MIYODA NEW MEXICO 8263 REGISTERED PROFESSIONAL ENGINEER

I, Edward M. Miyoda, state that this drawing was prepared under my supervision and all the information presented hereon is true and correct to the best of my knowledge and information.

7-13-11 Edward Miyoda
Date Edward M. Miyoda, NM P.E. 8263

NO	DATE	CLASS REV	ADC	DESCRIPTION	DWN	DSGN	CHKD	SUB	APP

WEIDLINGER-NAVARRO JV NORTHERN NM

TRU WASTE FACILITY PROJECT

Figure 2-15. Storage Buildings Plumbing Details (Emergency Eyewash/Shower)

BLDG 63-0149 TO 63-0153 TA-63

DRAWN	D.BROERMAN
DESIGN	E. MIYODA
CHECKED	C. MOYERS
DATE	07-15-11

SUBMITTED | APPROVED FOR RELEASE

Los Alamos NATIONAL LABORATORY PO Box 1663 Los Alamos, New Mexico 87545

SHEET P-5000
167 OF 283

CLASSIFICATION XXX | REVIEWER XXX | DATE

PROJECT ID 102355 | DRAWING NO C55444 | REV D

Plotted By: BROERMAN, DARLENE; Plot Date: Tuesday, July 12, 2011; Plot CTB File: LANL D-SIZE.CTB; Page Setup Name: PDF; InsUnits: 1; LTScale: 1.000000 Measurement: 0;

GENERAL NOTES

1. IF THIS SHEET IS NOT 24" X 36", THEN IT IS A REDUCED SIZE PLOT. USE GRAPHIC SCALE ACCORDINGLY.
2. THIS DRAWING WAS GENERATED IN REVIT 2011 AND DOES NOT FOLLOW LANL DRAFTING STANDARDS.

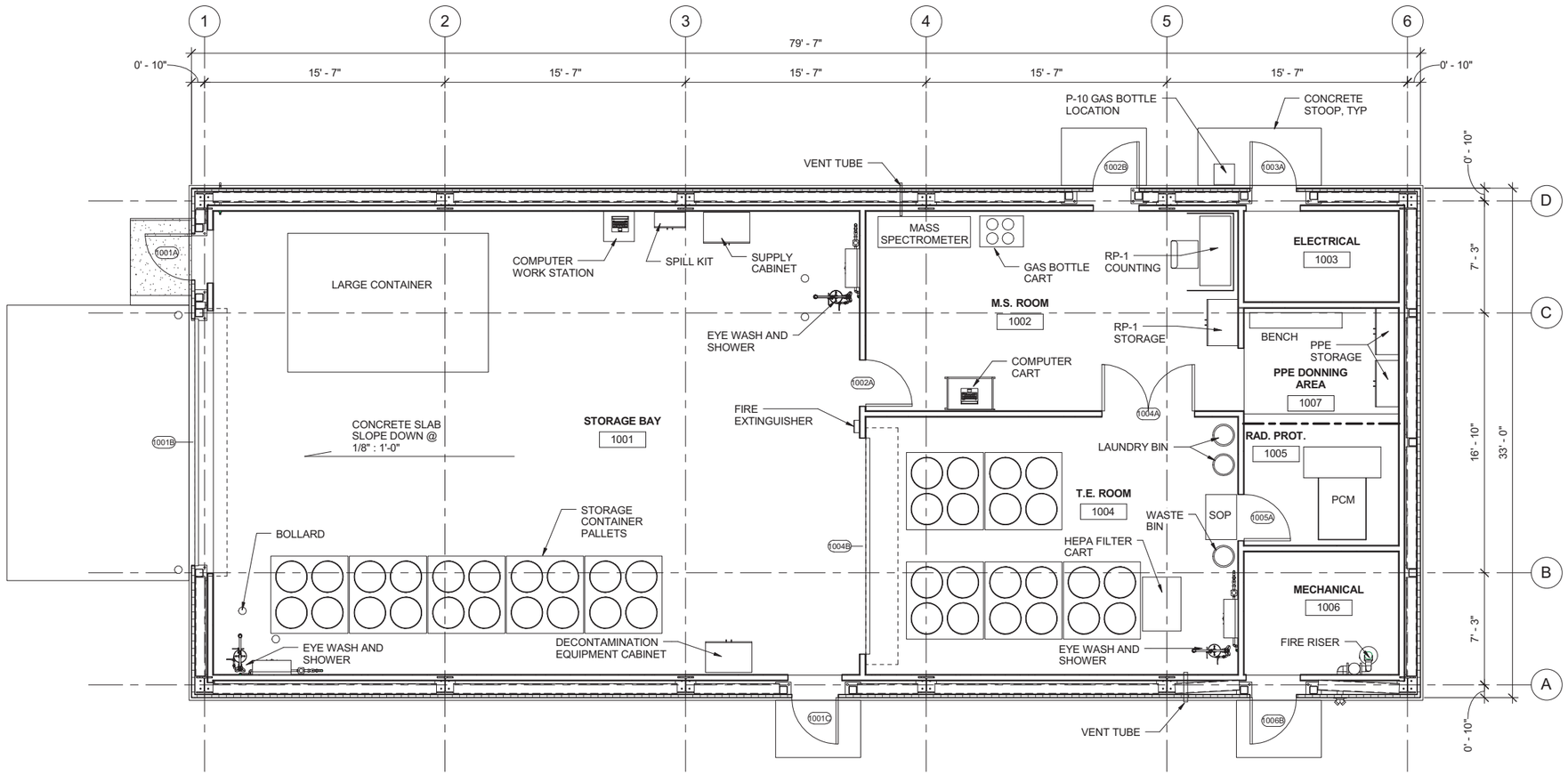

FLOOR PLAN

0 1' 2' 4' 6' 8'
1/4"=1'-0"

NOT FOR CONSTRUCTION
PART B PERMIT APPLICATION

NO	DATE	CLASS REV	ADC	DESCRIPTION	DWN	DSGN	CHKD	SUB	APP

WEIDLINGER-NAVARRO JV NORTHERN NM

TRU WASTE FACILITY PROJECT

Figure 2-16. Storage and Characterization Building Floor Plan

BLDG 63-0154 TA- 63

DRAWN	A. GALLEGOS
DESIGN	D. WALLERSTEDT
CHECKED	T. LEACH
DATE	07-15-11

SUBMITTED | APPROVED FOR RELEASE

Los Alamos NATIONAL LABORATORY PO Box 1663 Los Alamos, New Mexico 87545

SHEET A-1001

199 OF 283

CLASSIFICATION | REVIEWER | DATE

PROJECT ID 102355 | DRAWING NO C55445 | REV D

STATE OF NEW MEXICO
DAVID L. WALLERSTEDT
NO. 3132
REGISTERED ARCHITECT

I, David L. Wallerstedt, state that this drawing was prepared under my supervision and all the information presented hereon is true and correct to the best of my knowledge and information.

7-13-11
Date

David L. Wallerstedt, NM R.A. 3132

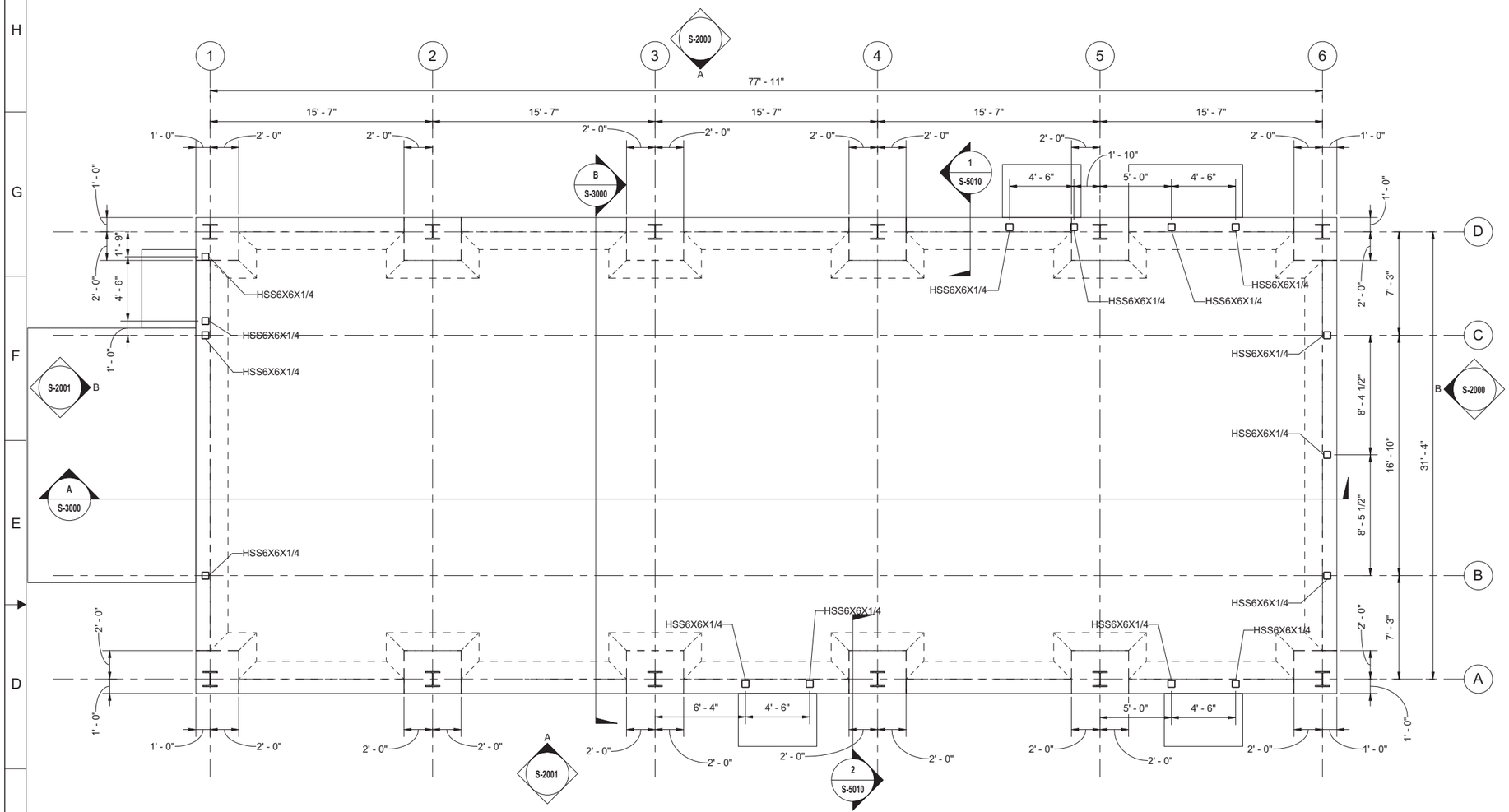

FOUNDATION PLAN

0 1' 2' 4' 6' 8'
1/4"=1'-0"

GENERAL NOTES

1. ABBREVIATIONS AND LEGEND ARE LOCATED ON SHEET S-0001 AND GENERAL STRUCTURAL NOTES ARE LOCATED ON SHEET S-0002.
2. TYPICAL DETAILS ARE LOCATED ON SHEET S-5000.
3. FINISH FLOOR REFERENCE ELEVATION 100'-0" = 7217.25'.
4. SEE CIVIL PLANS FOR EXTERIOR SLAB AND PAVING.
5. SEE SOILS REPORT FOR UNDER SLAB AND FOOTING REQUIREMENTS.
6. IF THIS SHEET IS NOT 24"x36", THEN IT IS A REDUCED SIZE PLOT. USE GRAPHIC SCALE ACCORDINGLY.
7. THIS DRAWING WAS GENERATED IN REVIT 2011 AND DOES NOT FOLLOW LANL DRAFTING STANDARDS.

KEYED NOTES

1. 12" MAT SLAB WITH #5@12"O.C. EACHWAY, TOP AND BOTTOM. REFERENCE FINISH FLOOR ELEVATION = 100'-0" U.O.N. ACTUAL FINISH FLOOR ELEVATION = 7217.25'.

NOT FOR CONSTRUCTION
PART B PERMIT APPLICATION

JAMES M. WEEKS NEW MEXICO 11384 REGISTERED PROFESSIONAL ENGINEER

I, James M. Weeks, state that this drawing was prepared under my supervision and all the information presented hereon is true and correct to the best of my knowledge and information.

7/15/11
Date

James M. Weeks, NM P.E. 11384

NO	DATE	CLASS REV	ADC	DESCRIPTION	DWN	DSGN	CHKD	SUB	APP

WEIDLINGER-NAVARRO JV NORTHERN NM

TRU WASTE FACILITY PROJECT

Figure 2-17. Storage & Characterization Building Foundation Plan

BLDG 63-0154 TA- 63

DRAWN	G.FLORES
DESIGN	J.WEEKS
CHECKED	C.ROSENBERGER
DATE	07-15-11

SUBMITTED | APPROVED FOR RELEASE

Los Alamos NATIONAL LABORATORY
PO Box 1663
Los Alamos, New Mexico 87545

SHEET S-1000
189 OF 276

CLASSIFICATION | REVIEWER | DATE

PROJECT ID 102355 | DRAWING NO C55445 | REV D

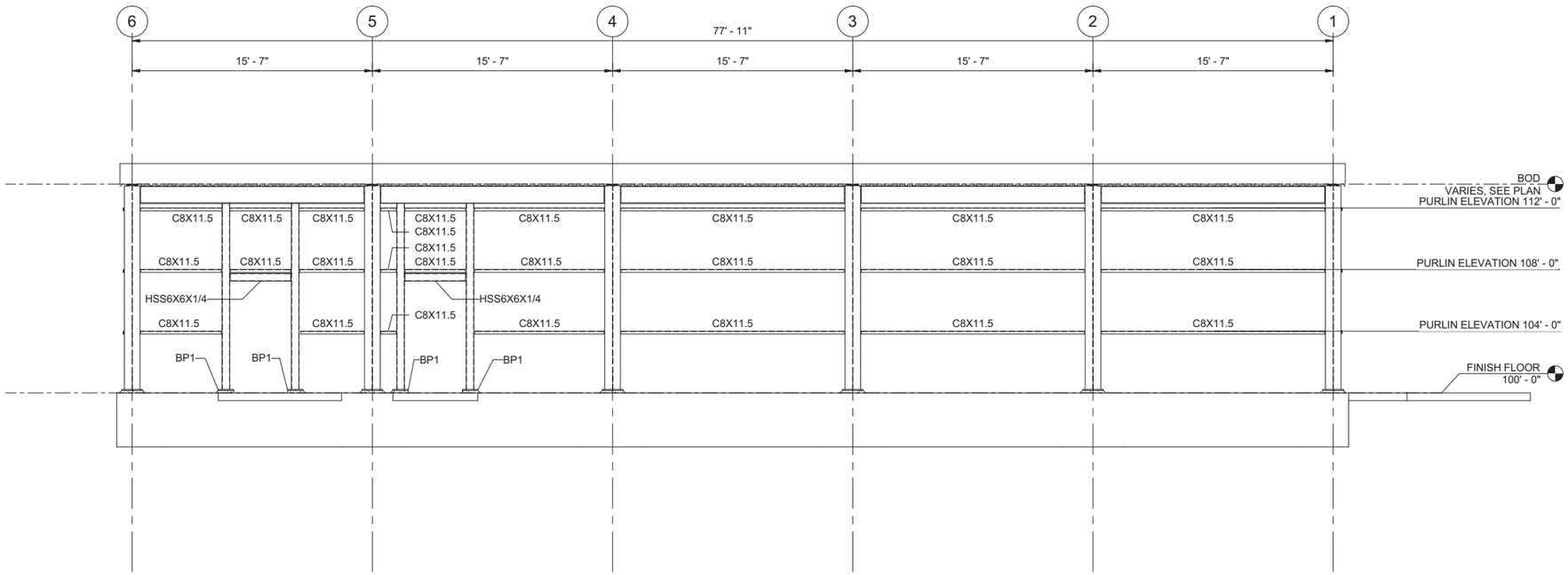

A / S-1000 **WEST ELEVATION**

0 1' 2' 4' 6' 8'
1/4"=1'-0"

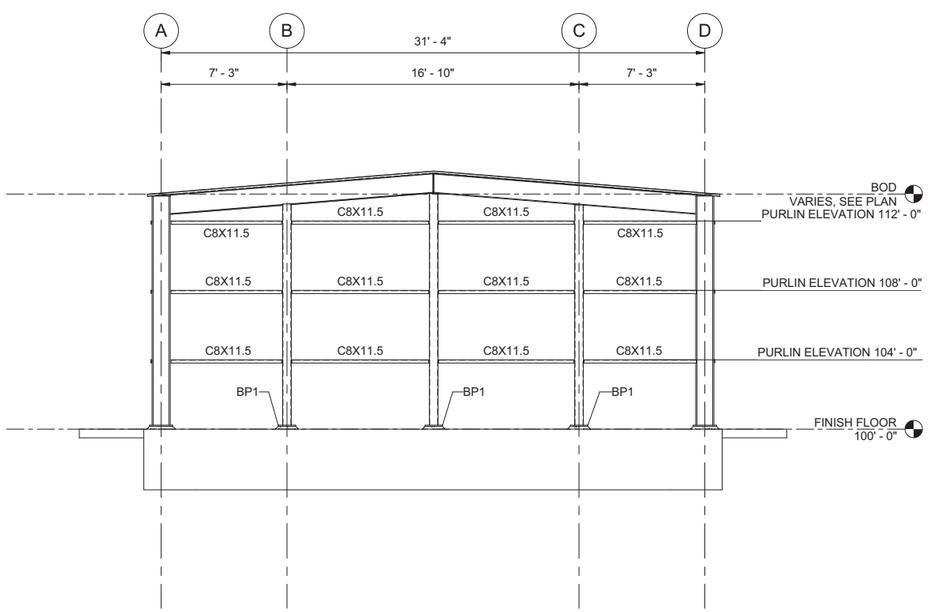

B / S-1000 **NORTH ELEVATION**

0 1' 2' 4' 6' 8'
1/4"=1'-0"

GENERAL NOTES

1. ABBREVIATIONS AND LEGEND ARE LOCATED ON SHEET S-0001 AND GENERAL STRUCTURAL NOTES ARE LOCATED ON SHEET S-0002.
2. TYPICAL DETAILS ARE LOCATED ON SHEET S-5000.
3. BASEPLATE SCHEDULE IS LOCATED IN DETAIL 1/S-5000.
4. FINISH FLOOR REFERENCE ELEVATION 100'-0" = 7217.25'.
5. IF THIS SHEET IS NOT 24"x36", THEN IT IS A REDUCED SIZE PLOT. USE GRAPHIC SCALE ACCORDINGLY.
6. THIS DRAWING WAS GENERATED IN REVIT 2011 AND DOES NOT FOLLOW LANL DRAFTING STANDARDS.

JAMES M. WEEKS NEW MEXICO 11384 REGISTERED PROFESSIONAL ENGINEER

I, James M. Weeks, state that this drawing was prepared under my supervision and all the information presented hereon is true and correct to the best of my knowledge and information.

7/15/11
Date

James M. Weeks, NM P.E. 11384

NOT FOR CONSTRUCTION
PART B PERMIT APPLICATION

NO	DATE	CLASS REV	ADC	DESCRIPTION	DWN	DSGN	CHKD	SUB	APP

WEIDLINGER-NAVARRO JV NORTHERN NM

TRU WASTE FACILITY PROJECT

Figure 2-18. Storage and Characterization Building Structural Elevations

DRAWN	G.FLORES
DESIGN	J.WEEKS
CHECKED	C.ROSENBERGER
DATE	07-15-11

BLDG 03-0134 TA- 63

SUBMITTED | APPROVED FOR RELEASE

Los Alamos NATIONAL LABORATORY PO Box 1663 Los Alamos, New Mexico 87545

SHEET S-2000

191 OF 276

CLASSIFICATION | REVIEWER | DATE

PROJECT ID	DRAWING NO	REV
102355	C55445	D

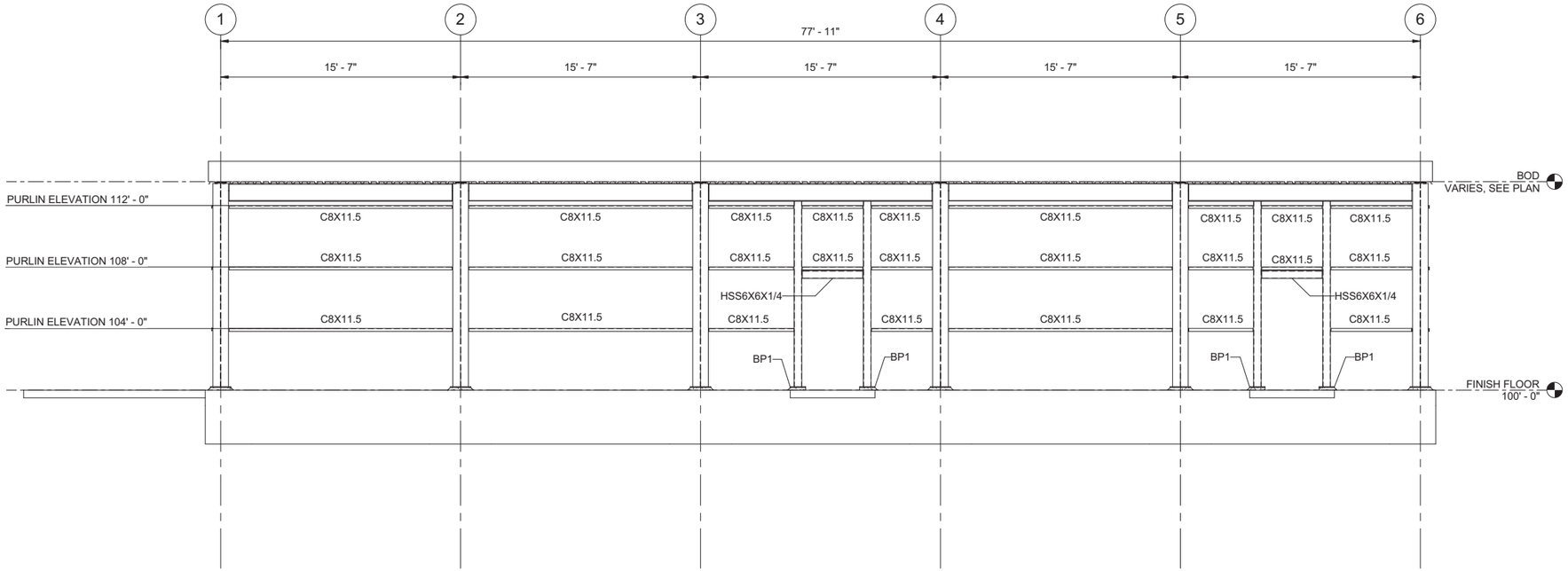

A S-1000 **EAST ELEVATION**

0 1' 2' 4' 6' 8'
1/4"=1'-0"

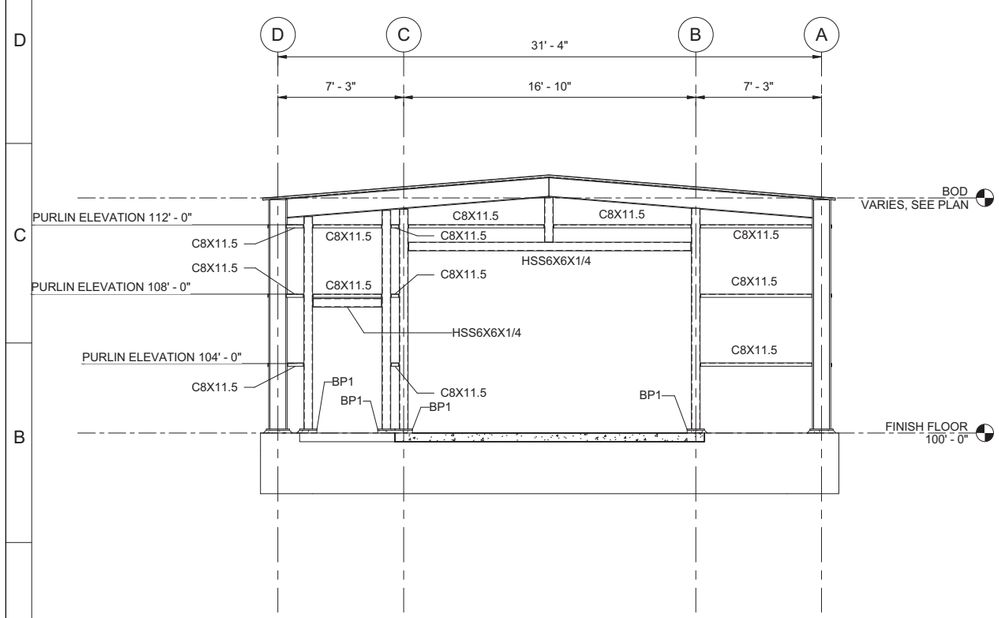

B S-1000 **SOUTH ELEVATION**

0 1' 2' 4' 6' 8'
1/4"=1'-0"

GENERAL NOTES

1. ABBREVIATIONS AND LEGEND ARE LOCATED ON SHEET S-0001 AND GENERAL STRUCTURAL NOTES ARE LOCATED ON SHEET S-0002.
2. TYPICAL DETAILS ARE LOCATED ON SHEET S-5000.
3. BASEPLATE SCHEDULE IS LOCATED IN DETAIL 1/S-5000.
4. FINISH FLOOR REFERENCE ELEVATION 100'-0" = 7217.25'.
5. IF THIS SHEET IS NOT 24"x36", THEN IT IS A REDUCED SIZE PLOT. USE GRAPHIC SCALE ACCORDINGLY.
6. THIS DRAWING WAS GENERATED IN REVIT 2011 AND DOES NOT FOLLOW LANL DRAFTING STANDARDS.

JAMES M. WEEKS NEW MEXICO 11384 REGISTERED PROFESSIONAL ENGINEER

I, James M. Weeks, state that this drawing was prepared under my supervision and all the information presented hereon is true and correct to the best of my knowledge and information.

7/15/11
Date

James M. Weeks, NM P.E. 11384

NOT FOR CONSTRUCTION
PART B PERMIT APPLICATION

NO	DATE	CLASS REV	ADC	DESCRIPTION	DWN	DSGN	CHKD	SUB	APP

WEIDLINGER-NAVARRO JV NORTHERN NM

TRU WASTE FACILITY PROJECT

Figure 2-19.
Storage & Characterization Building Structural Elevations

BLDG 63-0154 TA- 63

DRAWN	G.FLORES
DESIGN	J.WEEKS
CHECKED	C.ROSENBERGER
DATE	07-15-11

SUBMITTED | APPROVED FOR RELEASE

Los Alamos NATIONAL LABORATORY PO Box 1663 Los Alamos, New Mexico 87545

SHEET S-2001
192 OF 276

CLASSIFICATION | REVIEWER | DATE

PROJECT ID 102355 | DRAWING NO C55445 | REV D

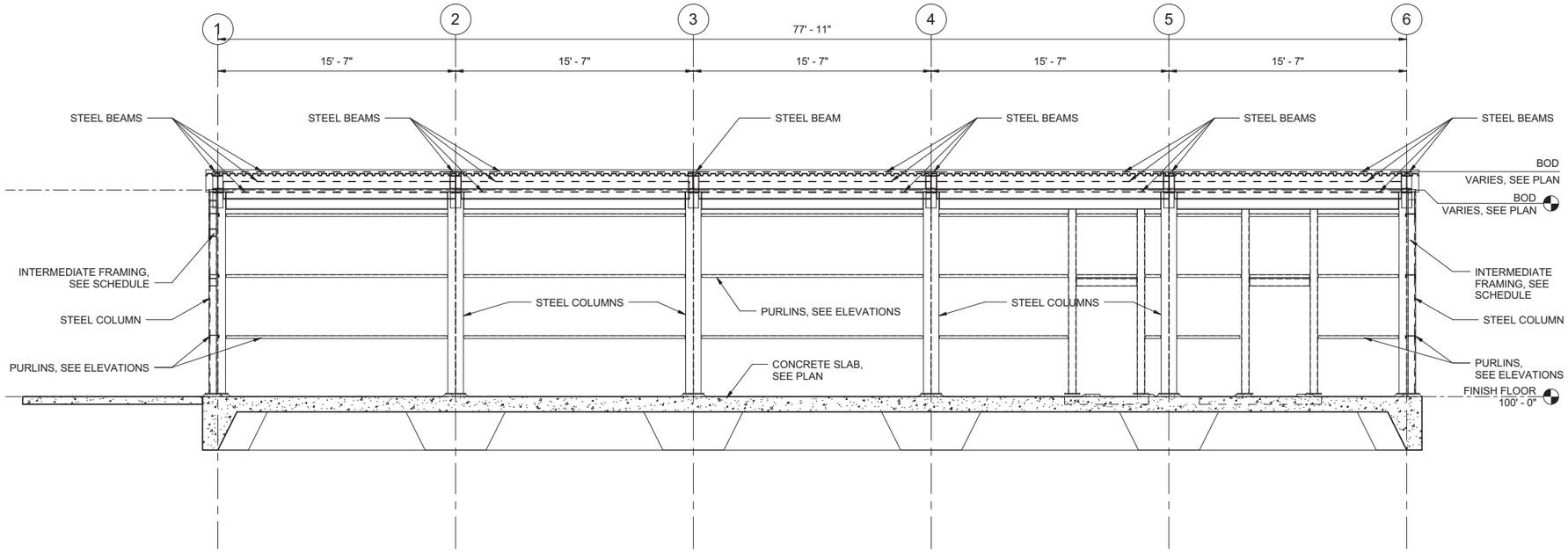

A
S-1000

SECTION

0 1' 2' 4' 6' 8'
1/4"=1'-0"

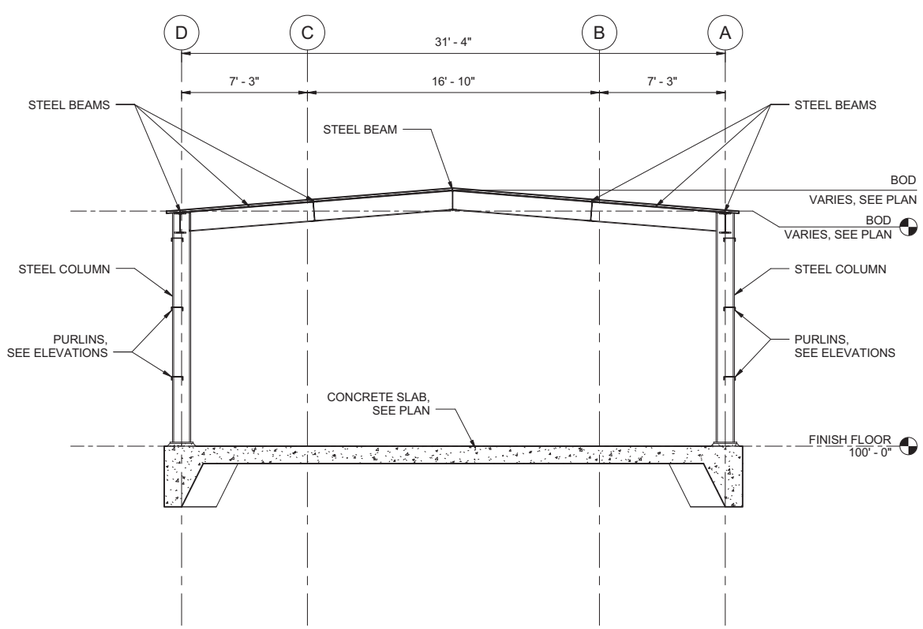

B
S-1000

SECTION

0 1' 2' 4' 6' 8'
1/4"=1'-0"

GENERAL NOTES

1. ABBREVIATIONS AND LEGEND ARE LOCATED ON SHEET S-0001 AND GENERAL STRUCTURAL NOTES ARE LOCATED ON SHEET S-0002.
2. TYPICAL DETAILS ARE LOCATED ON SHEETS S-5000 THRU S-50XX.
3. FINISH FLOOR REFERENCE ELEVATION 100'-0" = 7217.25'.
4. IF THIS SHEET IS NOT 24"x36", THEN IT IS A REDUCED SIZE PLOT. USE GRAPHIC SCALE ACCORDINGLY.
5. THIS DRAWING WAS GENERATED IN REVIT 2011 AND DOES NOT FOLLOW LANL DRAFTING STANDARDS.

NOT FOR CONSTRUCTION
PART B PERMIT APPLICATION

NO	DATE	CLASS REV	ADC	DESCRIPTION	DWN	DSGN	CHKD	SUB	APP

JAMES M. WEEKS
NEW MEXICO
11384
REGISTERED PROFESSIONAL ENGINEER

I, James M. Weeks, state that this drawing was prepared under my supervision and all the information presented hereon is true and correct to the best of my knowledge and information.

7/15/11
Date

James M. Weeks, NM P.E. 11384

WEIDLINGER-NAVARRO JV NORTHERN NM

TRU WASTE FACILITY PROJECT

Figure 2-20.
Storage and Characterization Building Structural Sections

BLDG 63-0154 TA- 63

DRAWN	G.FLORES
DESIGN	J.WEEKS
CHECKED	C.ROSENBERGER
DATE	07-15-11

SUBMITTED

APPROVED FOR RELEASE

Los Alamos NATIONAL LABORATORY
PO Box 1663
Los Alamos, New Mexico 87545

SHEET S-3000

193 OF 276

CLASSIFICATION | REVIEWER | DATE

PROJECT ID 102355 | DRAWING NO C55445 | REV D

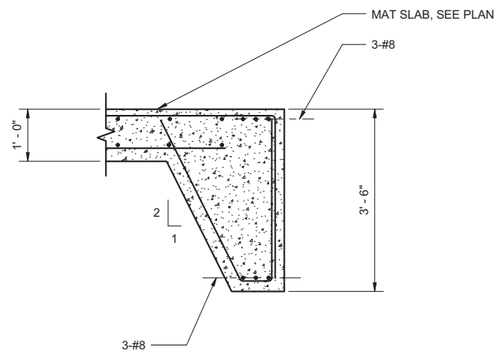

NOTE: SEE DETAIL 2/S-5000 FOR EXCAVATION REQUIREMENTS.

1 / S-1000 **MAT SLAB TURN DOWN**

1' 6" 0 1' 2'
3/4"=1'-0"

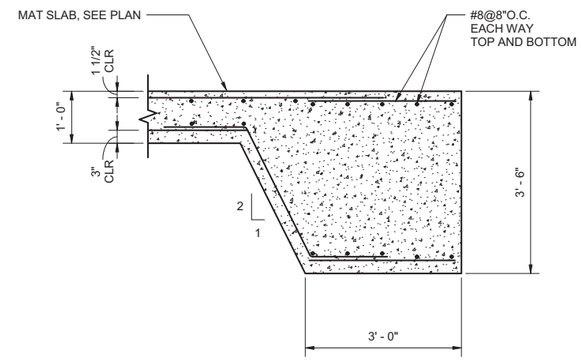

NOTE: SEE DETAIL 2/S-5000 FOR EXCAVATION REQUIREMENTS.

2 / S-1000 **THICKENED COLUMN MAT**

1' 6" 0 1' 2'
3/4"=1'-0"

GENERAL NOTES

1. ABBREVIATIONS AND LEGEND ARE LOCATED ON SHEET S-0001 AND GENERAL STRUCTURAL NOTES ARE LOCATED ON SHEET S-0002.
2. TYPICAL DETAILS ARE LOCATED ON SHEETS S-5000 THRU S-50XX.
3. FINISH FLOOR REFERENCE ELEVATION 100'-0" = 7217.25'.
4. IF THIS SHEET IS NOT 24"x36", THEN IT IS A REDUCED SIZE PLOT. USE GRAPHIC SCALE ACCORDINGLY.
5. THIS DRAWING WAS GENERATED IN REVIT 2011 AND DOES NOT FOLLOW LANL DRAFTING STANDARDS.

JAMES M. WEEKS NEW MEXICO 11384 REGISTERED PROFESSIONAL ENGINEER

I, James M. Weeks, state that this drawing was prepared under my supervision and all the information presented hereon is true and correct to the best of my knowledge and information.

7/15/11
Date

James M. Weeks, NM P.E. 11384

NOT FOR CONSTRUCTION
PART B PERMIT APPLICATION

NO	DATE	CLASS REV	ADC	DESCRIPTION	DWN	DSGN	CHKD	SUB	APP

WEIDLINGER-NAVARRO JV NORTHERN NM

TRU WASTE FACILITY PROJECT

Figure 2-21.
Storage and Characterization Building Foundation Details

BLDG 03-0134 TA- 03

DRAWN	G.FLORES
DESIGN	J.WEEKS
CHECKED	C.ROSENBERGER
DATE	07-15-11

SUBMITTED | APPROVED FOR RELEASE

Los Alamos NATIONAL LABORATORY
PO Box 1663
Los Alamos, New Mexico 87545

SHEET S-5010
195 OF 276

CLASSIFICATION | REVIEWER | DATE

PROJECT ID 102355 | DRAWING NO C55445 | REV D

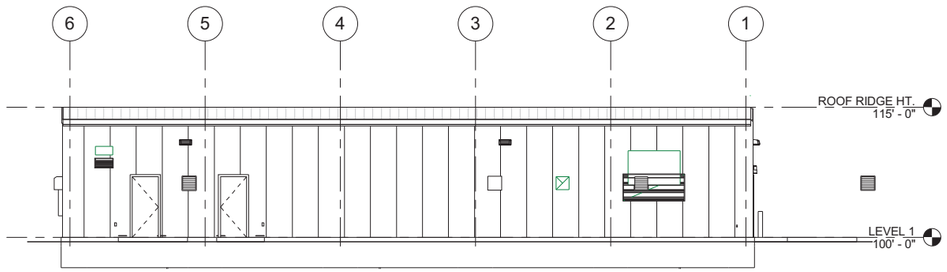

A A-1001 WEST ELEVATION

1/8"=1'-0"

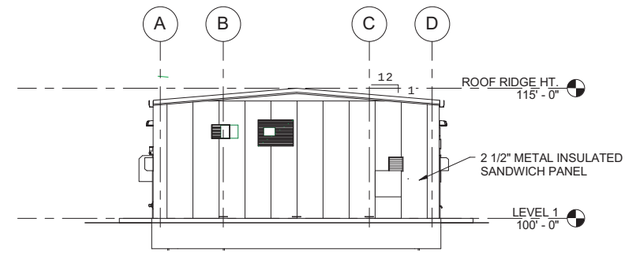

B A-1001 NORTH ELEVATION

1/8"=1'-0"

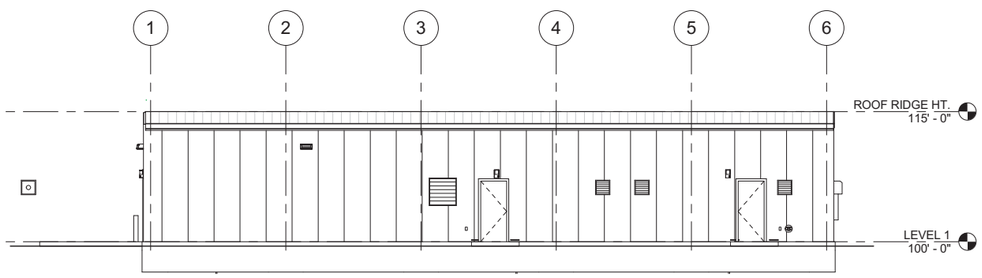

C A-1001 EAST ELEVATION

1/8"=1'-0"

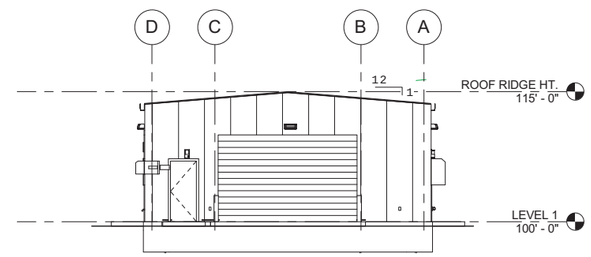

D A-1001 SOUTH ELEVATION

1/8"=1'-0"

GENERAL NOTES

1. IF THIS SHEET IS NOT 24" X 36", THEN IT IS A REDUCED SIZE PLOT. USE GRAPHIC SCALE ACCORDINGLY.
2. THIS DRAWING WAS GENERATED IN REVIT 2011 AND DOES NOT FOLLOW LANL DRAFTING STANDARDS.

NOT FOR CONSTRUCTION
PART B PERMIT APPLICATION

STATE OF NEW MEXICO
DAVID L. WALLERSTEDT
NO. 3132
REGISTERED ARCHITECT

I, David L. Wallerstedt, state that this drawing was prepared under my supervision and all the information presented hereon is true and correct to the best of my knowledge and information.

7-13-11
Date

David L. Wallerstedt, NM R.A. 3132

NO	DATE	CLASS REV	ADC	DESCRIPTION	DWN	DSGN	CHKD	SUB	APP

WEIDLINGER-NAVARRO JV NORTHERN NM

TRU WASTE FACILITY PROJECT

Figure 2-22.
Storage and Characterization Building Elevations

BLDG 63-0154 IA- 63

DRAWN	A. GALLEGOS
DESIGN	D. WALLERSTEDT
CHECKED	T. LEACH
DATE	07-15-11

SUBMITTED

APPROVED FOR RELEASE

Los Alamos NATIONAL LABORATORY
PO Box 1663
Los Alamos, New Mexico 87545

SHEET A-2000

200 OF 283

CLASSIFICATION | REVIEWER | DATE

PROJECT ID 102355 | DRAWING NO C55445 | REV D

GENERAL NOTES

1. IF THIS SHEET IS NOT 24" X 36", THEN IT IS A REDUCED SIZE PLOT. USE GRAPHIC SCALE ACCORDINGLY.
2. THIS DRAWING WAS GENERATED IN REVIT 2011 AND DOES NOT FOLLOW LANL DRAFTING STANDARDS.

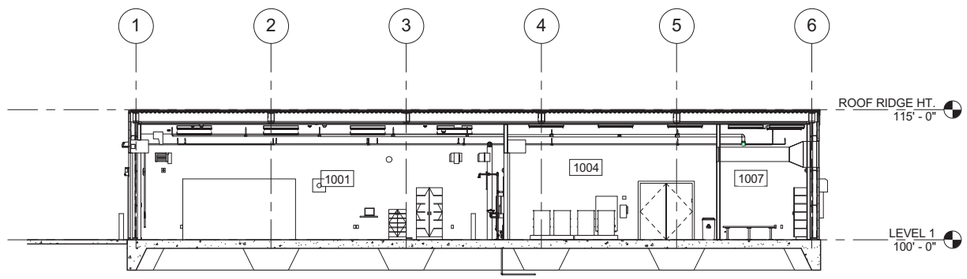

A A-1001 BUILDING SECTION

1/8"=1'-0"

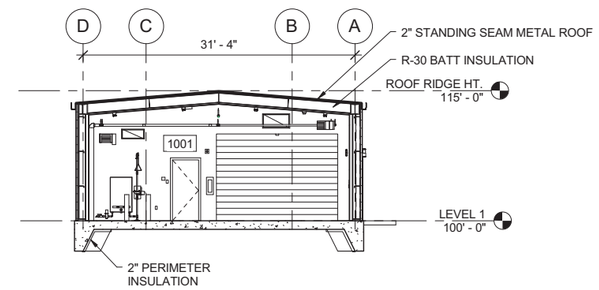

B A-1001 BUILDING SECTION

1/8"=1'-0"

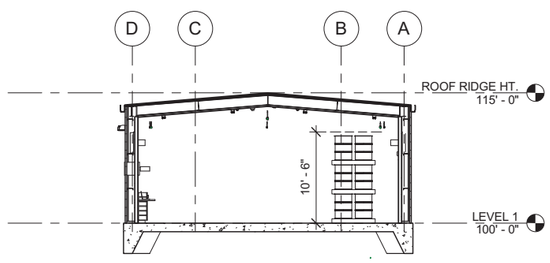

C A-1001 BUILDING SECTION

1/8"=1'-0"

NOT FOR CONSTRUCTION
PART B PERMIT APPLICATION

NO	DATE	CLASS REV	ADC	DESCRIPTION	DWN	DSGN	CHKD	SUB	APP

WEIDLINGER-NAVARRO JV NORTHERN NM

TRU WASTE FACILITY PROJECT

Figure 2-23. Storage and Characterization Building Sections

DRAWN	A. GALLEGOS
DESIGN	D. WALLERSTEDT
CHECKED	T. LEACH
DATE	07-15-11

BLDG 63-0154 TA- 63

SUBMITTED | APPROVED FOR RELEASE

Los Alamos NATIONAL LABORATORY PO Box 1663 Los Alamos, New Mexico 87545

SHEET A-3000

201 OF 283

CLASSIFICATION | REVIEWER | DATE

PROJECT ID 102355 | DRAWING NO C55445 | REV D

STATE OF NEW MEXICO
DAVID L. WALLERSTEDT
NO. 3132
REGISTERED ARCHITECT

I, David L. Wallerstedt, state that this drawing was prepared under my supervision and all the information presented hereon is true and correct to the best of my knowledge and information.

7-13-11
Date

David L. Wallerstedt, NM R.A. 3132

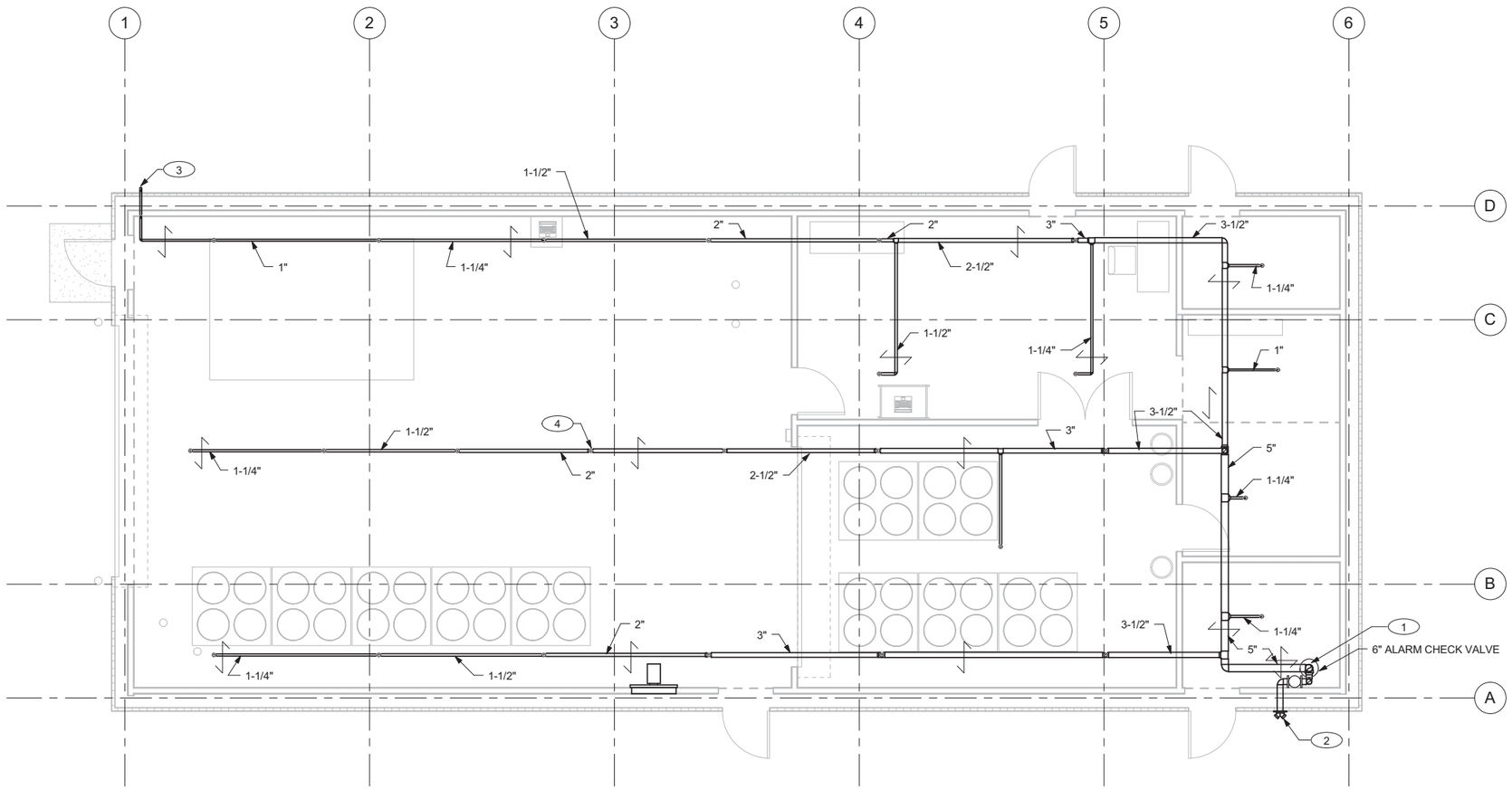

FIRE PROTECTION PLAN

0 1' 2' 4' 6' 8'
1/4"=1'-0"

GENERAL NOTES:

A. IF THIS SHEET IS NOT 24"x36", IT IS A REDUCED SIZE PLOT. USE GRAPHIC SCALE ACCORDINGLY.
B. THIS DRAWING WAS GENERATED IN REVIT 2011 AND DOES NOT FOLLOW LANL DRAFTING STANDARDS.
C. SEE SHEETS F-0001AND F-0002 FOR ABBREVIATIONS, GENERAL NOTES, LEGEND AND STRUCTURAL BRACING.

KEYED NOTES:

1. 6" FIRE PROTECTION RISER, SEE DETAIL 1 SHEET F-5000.
2. FIRE DEPARTMENT CONNECTION.
3. INSPECTOR'S TEST STATION.
4. UPRIGHT SPRINKLER, TYPICAL.

NOT FOR CONSTRUCTION
PART B PERMIT APPLICATION

EDWARD M. MIYODA NEW MEXICO 8263 REGISTERED PROFESSIONAL ENGINEER

I, Edward M. Miyoda, state that this drawing was prepared under my supervision and all the information presented hereon is true and correct to the best of my knowledge and information.

7-15-11 Edward Miyoda
Date Edward M. Miyoda, NM P.E. 8263

NO	DATE	CLASS REV	ADC	DESCRIPTION	DWN	DSGN	CHKD	SUB	APP

WEIDLINGER-NAVARRO JV NORTHERN NM

TRU WASTE FACILITY PROJECT

Figure 2-24.
Storage and Characterization Building Fire Protection Plan

BLDG 63-0154 TA- 63

DRAWN	D.BROERMAN
DESIGN	E. MIYODA
CHECKED	C. MOYERS
DATE	07-15-11

SUBMITTED
APPROVED FOR RELEASE

Los Alamos NATIONAL LABORATORY PO Box 1663 Los Alamos, New Mexico 87545

SHEET F-1000
205 OF 283

CLASSIFICATION | REVIEWER | DATE

PROJECT ID 102355 | DRAWING NO C55445 | REV D

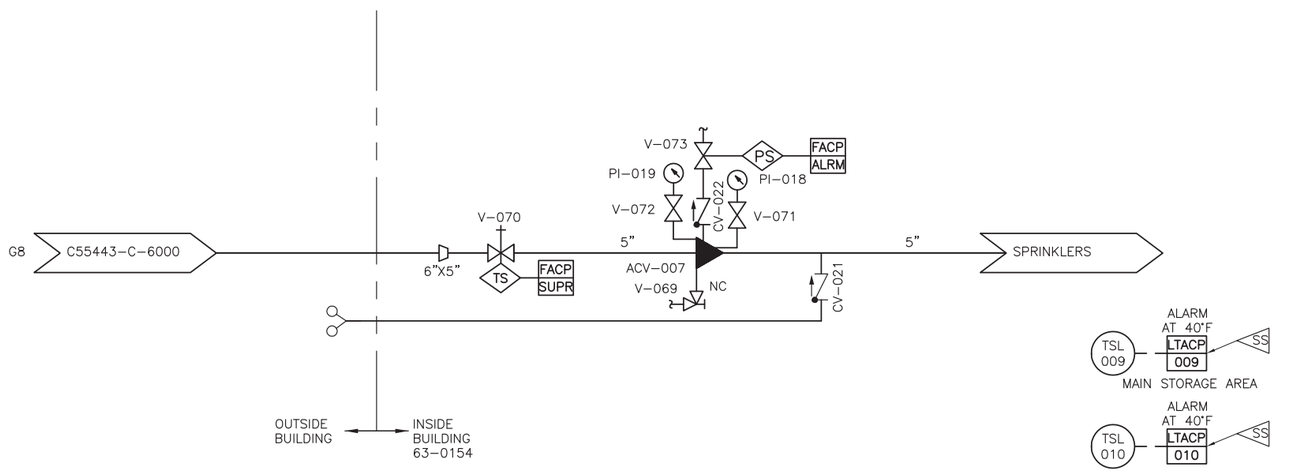

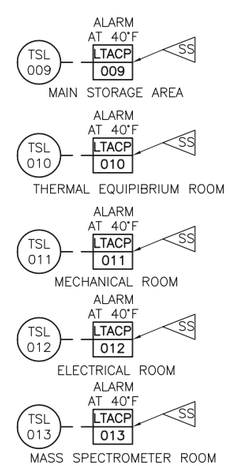

FIRE PROTECTION P&ID

SCALE: NONE

EDWARD M. MIYODA NEW MEXICO 8263 REGISTERED PROFESSIONAL ENGINEER

I, Edward M. Miyoda, state that this drawing was prepared under my supervision and all the information presented hereon is true and correct to the best of my knowledge and information.

7-13-11 Edward Miyoda
Date Edward M. Miyoda, NM P.E. 8263

NOT FOR CONSTRUCTION
PART B PERMIT APPLICATION

NO	DATE	CLASS REV	ADC	DESCRIPTION	DWN	DSGN	CHKD	SUB	APP

WEIDLINGER-NAVARRO JV NORTHERN NM

TRU WASTE FACILITY PROJECT

Figure 2-25. Storage & Characterization Building Fire Protection P & ID

BLDG 63-0154 TA-63

DRAWN	D. JENSEN
DESIGN	E. MIYODA
CHECKED	C. MOYERS
DATE	07-15-11

SUBMITTED | APPROVED FOR RELEASE

Los Alamos NATIONAL LABORATORY
P0 Box 1663
Los Alamos, New Mexico 87545

SHEET F-6000
208 OF 283

CLASSIFICATION XXX | REVIEWER XXX | DATE

PROJECT ID 102355 | DRAWING NO C55445 | REV D

File Location: P:_TECHNOLOGY\LANL\102355 - TRU WASTE FACILITY\500 CAD\STORAGE BLDG -TE ROOM\M-P-FIRE\ACAD\F-6000.DWG
Plotted By: GALLEGOS, ALAN; Plot Date: Wednesday, July 13, 2011; Plot CTB File: LANL D-SIZE.CTB; Page Setup Name: ----; InsUnits: 1; LTScale: 1.00000000 Measurement: 0;

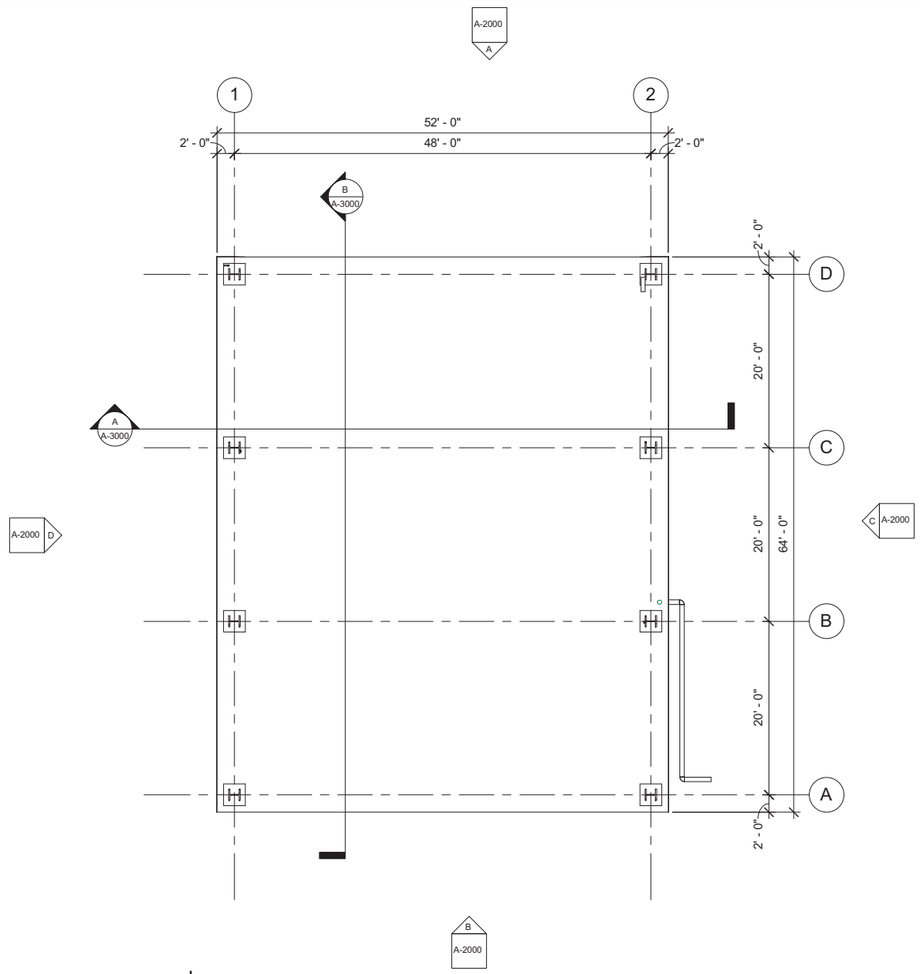

FLOOR PLAN

4' 2' 0 4' 8' 12'

1 / 8" = 1' - 0"

GENERAL NOTES

1. IF THIS SHEET IS NOT 24" x 36", THEN IT IS A REDUCED SIZE PLOT. USE GRAPHIC SCALE ACCORDINGLY.
2. THIS DRAWING WAS GENERATED IN REVIT 2011 AND DOES NOT FOLLOW LANL DRAFTING STANDARDS.

NOT FOR CONSTRUCTION
PART B PERMIT APPLICATION

STATE OF NEW MEXICO
DAVID L. WALLERSTEDT
NO. 3132
REGISTERED ARCHITECT

I, David L. Wallerstedt, state that this drawing was prepared under my supervision and all the information presented hereon is true and correct to the best of my knowledge and information.

7-13-11
Date

David L. Wallerstedt, NM R.A. 3132

NO	DATE	CLASS REV	ADC	DESCRIPTION	DWN	DSGN	CHKD	SUB	APP

WEIDLINGER-NAVARRO JV NORTHERN NM

TRU WASTE FACILITY PROJECT
CANOPY
Figure 2-26. Canopy Floor Plan

DRAWN	A. GALLEGOS
DESIGN	D. WALLERSTEDT
CHECKED	T. LEACH
DATE	07-15-11

BLDG 63-0145 TA- 63

SUBMITTED

APPROVED FOR RELEASE

Los Alamos NATIONAL LABORATORY
PO Box 1663
Los Alamos, New Mexico 87545

SHEET A-1000

103 OF 283

CLASSIFICATION | REVIEWER | DATE

PROJECT ID 102355 | DRAWING NO C55447 | REV D

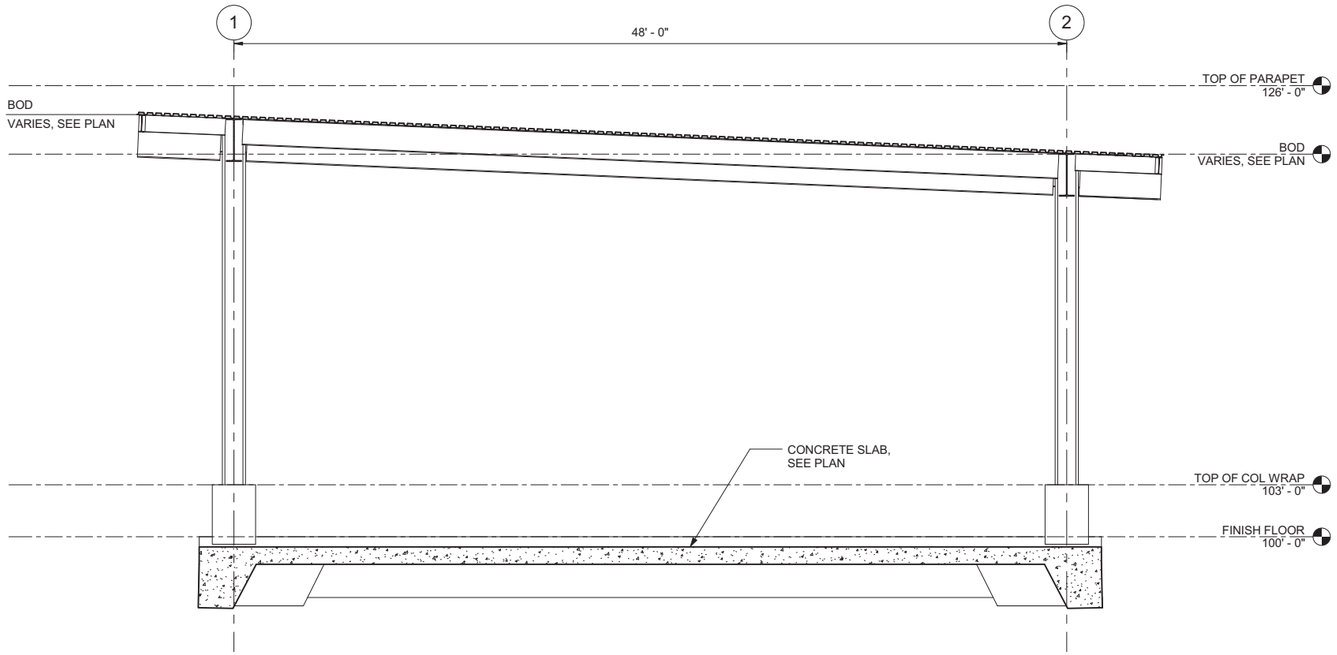

A
S-1000
SECTION

0 1' 2' 4' 6' 8'
1/4"=1'-0"

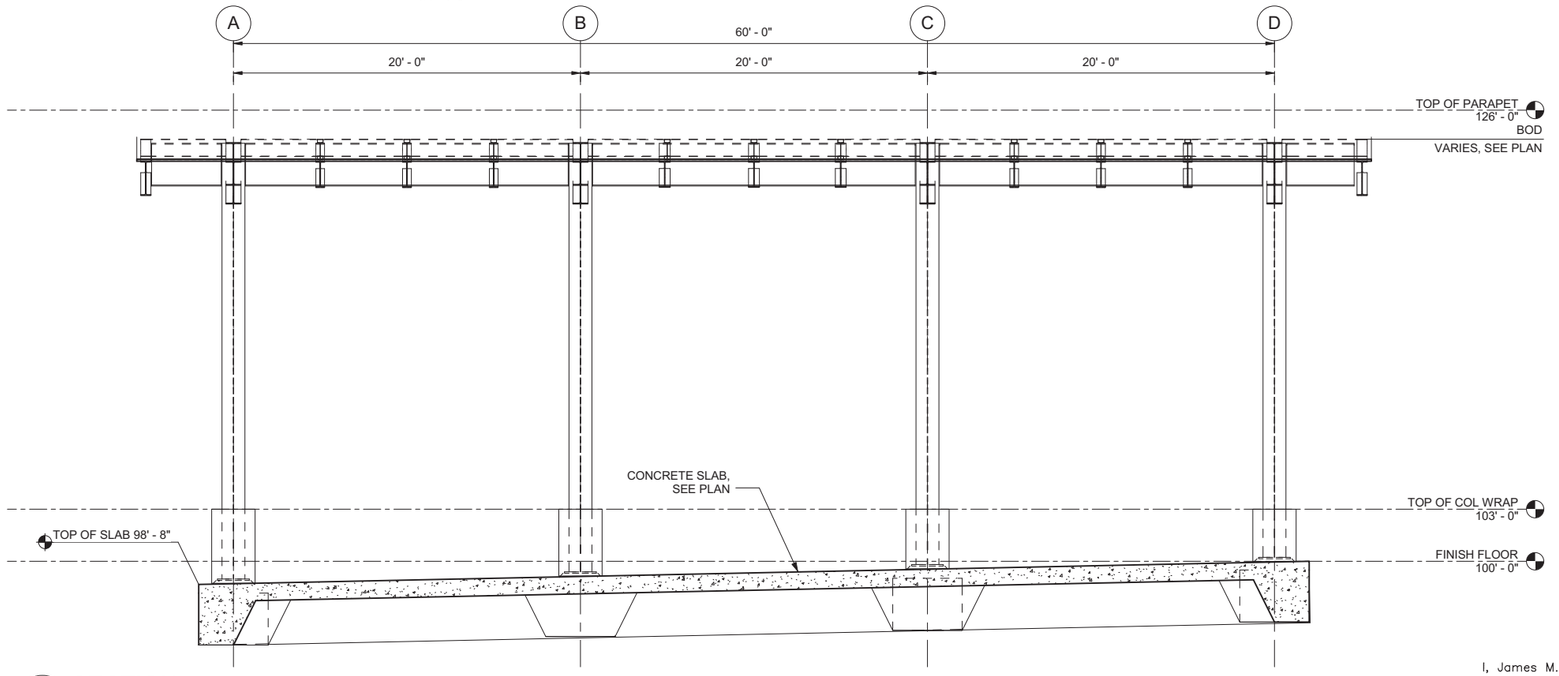

B
S-1000
SECTION

0 1' 2' 4' 6' 8'
1/4"=1'-0"

GENERAL NOTES

1. ABBREVIATIONS AND LEGEND ARE LOCATED ON SHEET S-0001 AND GENERAL STRUCTURAL NOTES ARE LOCATED ON SHEET S-0002.
2. TYPICAL DETAILS ARE LOCATED ON SHEET S-5000.
3. BASE PLATE SCHEDLUE IS LOCATED IN DETAIL 1/S-5000.
4. IF THIS SHEET IS NOT 24"x36", THEN IT IS A REDUCED SIZE PLOT. USE GRAPHIC SCALE ACCORDINGLY.
5. THIS DRAWING WAS GENERATED IN REVIT 2011 AND DOES NOT FOLLOW LANL DRAFTING STANDARDS.
6. FINISH FLOOR ELEVATION 100'-0" = 7212.00'.

NOT FOR CONSTRUCTION
PART B PERMIT APPLICATION

NO	DATE	CLASS REV	ADC	DESCRIPTION	DWN	DSGN	CHKD	SUB	APP

WEIDLINGER-NAVARRO JV NORTHERN NM

TRU WASTE FACILITY PROJECT

Figure 2-27. Canopy Structural Sections

DRAWN	G.FLORES
DESIGN	C.ROSENBERGER
CHECKED	J.WEEKS
DATE	07-15-11

BLDG 63-0145 TA- 63

SUBMITTED | APPROVED FOR RELEASE

JAMES M. WEEKS NEW MEXICO 11384 REGISTERED PROFESSIONAL ENGINEER

I, James M. Weeks, state that this drawing was prepared under my supervision and all the information presented hereon is true and correct to the best of my knowledge and information.

7/15/11
Date

James M. Weeks, NM P.E. 11384

Los Alamos NATIONAL LABORATORY PO Box 1663 Los Alamos, New Mexico 87545

SHEET S-3000

98 OF 276

CLASSIFICATION | REVIEWER | DATE

PROJECT ID 102355 | DRAWING NO C55447 | REV D

GENERAL NOTES

1. ABBREVIATIONS AND LEGEND ARE LOCATED ON SHEET S-0001 AND GENERAL STRUCTURAL NOTES ARE LOCATED ON SHEET S-0002.
2. TYPICAL DETAILS ARE LOCATED ON SHEET S-5000.
3. IF THIS SHEET IS NOT 24"x36", THEN IT IS A REDUCED SIZE PLOT. USE GRAPHIC SCALE ACCORDINGLY.
4. THIS DRAWING WAS GENERATED IN REVIT 2011 AND DOES NOT FOLLOW LANL DRAFTING STANDARDS.

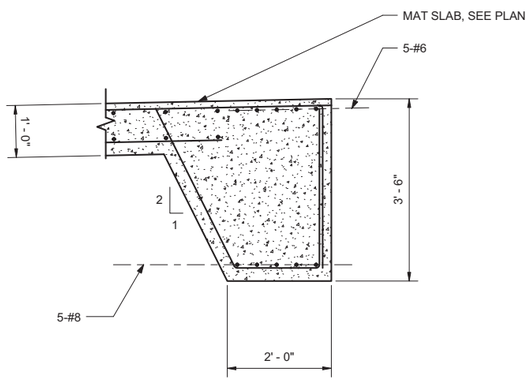

NOTE: SEE DETAIL 2/S-5000 FOR EXCAVATION REQUIREMENTS.

1 / S-1000 MAT SLAB TURN DOWN

1' 6" 0 1' 2'
3/4"=1'-0"

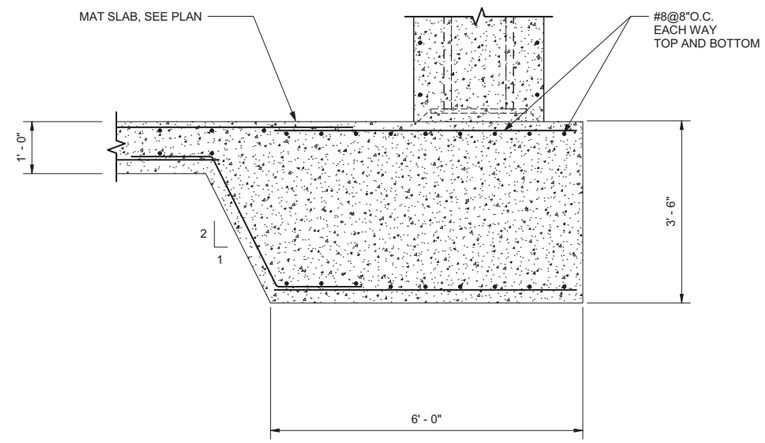

NOTE: SEE DETAIL 2/S-5000 FOR EXCAVATION REQUIREMENTS.

2 / S-1000 THICKENED COLUMN MAT

1' 6" 0 1' 2'
3/4"=1'-0"

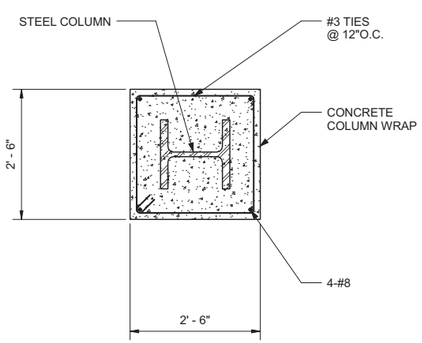

3 / S-1000 COLUMN WRAP SECTION

1' 6" 0 1' 2'
3/4"=1'-0"

I, James M. Weeks, state that this drawing was prepared under my supervision and all the information presented hereon is true and correct to the best of my knowledge and information.

7/15/11
Date

James M. Weeks, NM P.E. 11384

JAMES M. WEEKS NEW MEXICO 11384 REGISTERED PROFESSIONAL ENGINEER

NOT FOR CONSTRUCTION
PART B PERMIT APPLICATION

NO	DATE	CLASS REV	ADC	DESCRIPTION	DWN	DSGN	CHKD	SUB	APP

WEIDLINGER-NAVARRO JV NORTHERN NM

TRU WASTE FACILITY PROJECT

Figure 2-28. Canopy Foundation Details

DRAWN	G.FLORES
DESIGN	C.ROSENBERGER
CHECKED	J.WEEKS
DATE	07-15-11

BLDG 63-0145 TA- 63

SUBMITTED

APPROVED FOR RELEASE

Los Alamos NATIONAL LABORATORY PO Box 1663 Los Alamos, New Mexico 87545

SHEET S-5010

100 OF 276

CLASSIFICATION | REVIEWER | DATE

PROJECT ID 102355 | DRAWING NO C55447 | REV D

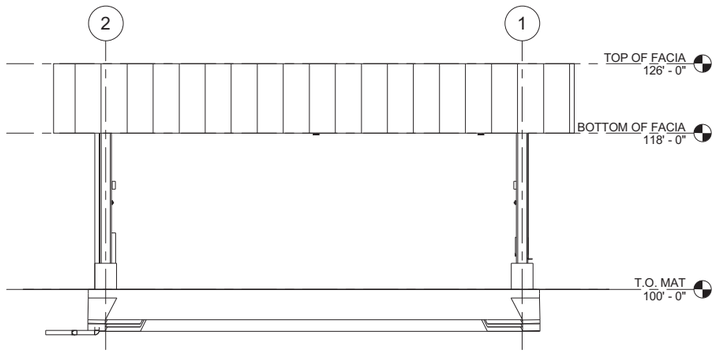

A A-1000 **NORTH ELEVATION**

4' 2' 0 4' 8' 12'
1 / 8" = 1' - 0"

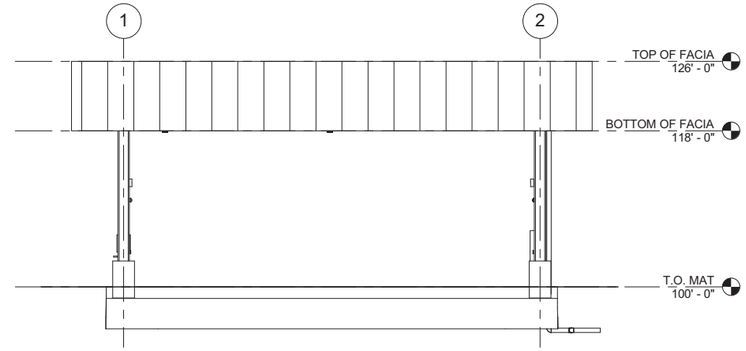

B A-1000 **SOUTH ELEVATION**

4' 2' 0 4' 8' 12'
1 / 8" = 1' - 0"

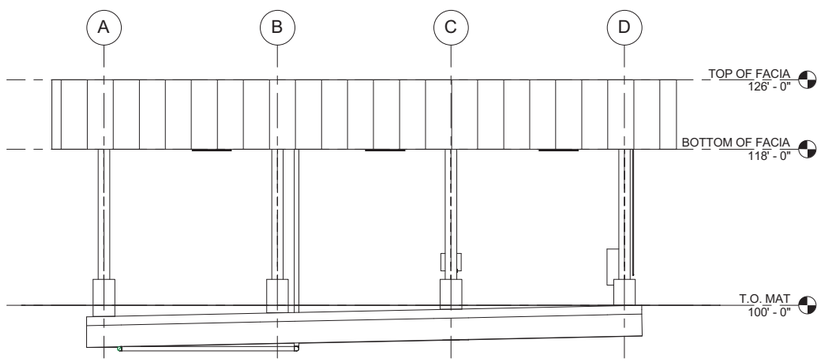

C A-1000 **EAST ELEVATION**

4' 2' 0 4' 8' 12'
1 / 8" = 1' - 0"

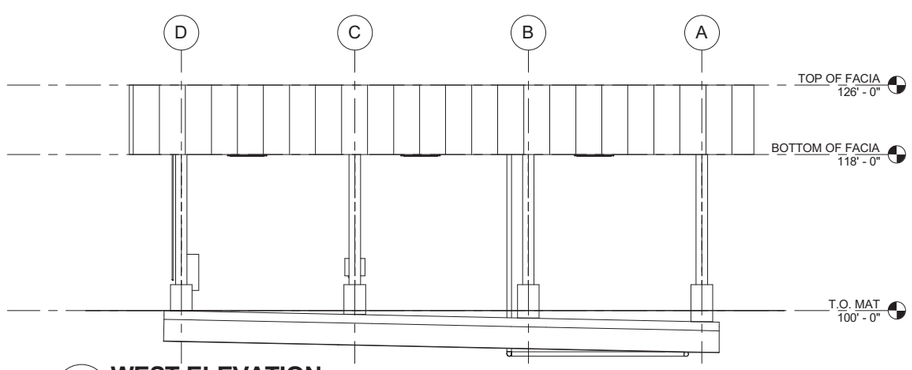

D A-1000 **WEST ELEVATION**

4' 2' 0 4' 8' 12'
1 / 8" = 1' - 0"

GENERAL NOTES

1. IF THIS SHEET IS NOT 24" x 36", THEN IT IS A REDUCED SIZE PLOT. USE GRAPHIC SCALE ACCORDINGLY.
2. THIS DRAWING WAS GENERATED IN REVIT 2011 AND DOES NOT FOLLOW LANL DRAFTING STANDARDS.

STATE OF NEW MEXICO
DAVID L. WALLERSTEDT
NO. 3132
REGISTERED ARCHITECT

I, David L. Wallerstedt, state that this drawing was prepared under my supervision and all the information presented hereon is true and correct to the best of my knowledge and information.

7-13-11
Date

David L. Wallerstedt, NM R.A. 3132

NOT FOR CONSTRUCTION
PART B PERMIT APPLICATION

NO	DATE	CLASS REV	ADC	DESCRIPTION	DWN	DSGN	CHKD	SUB	APP

WEIDLINGER-NAVARRO JV NORTHERN NM

TRU WASTE FACILITY PROJECT

Figure 2-29. Canopy Elevations

DRAWN	A. GALLEGOS
DESIGN	D. WALLERSTEDT
CHECKED	T. LEACH
DATE	07-15-11

BLDG 63-0145 TA- 63

SUBMITTED

APPROVED FOR RELEASE

Los Alamos NATIONAL LABORATORY
PO Box 1663
Los Alamos, New Mexico 87545

SHEET A-2000

104 OF 283

CLASSIFICATION	REVIEWER	DATE

PROJECT ID	DRAWING NO	REV
102355	C55447	D

GENERAL NOTES

1. IF THIS SHEET IS NOT 24" x 36", THEN IT IS A REDUCED SIZE PLOT. USE GRAPHIC SCALE ACCORDINGLY.
2. THIS DRAWING WAS GENERATED IN REVIT 2011 AND DOES NOT FOLLOW LANL DRAFTING STANDARDS.

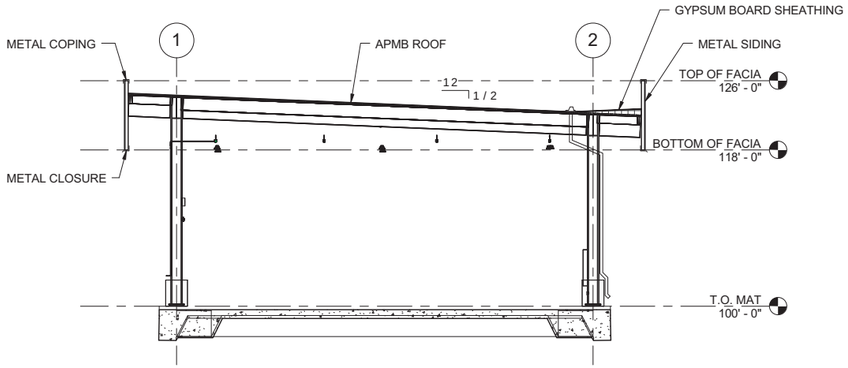

A A-1000 **BUILDING SECTION**

4' 2' 0 4' 8' 12'
1 / 8" = 1' - 0"

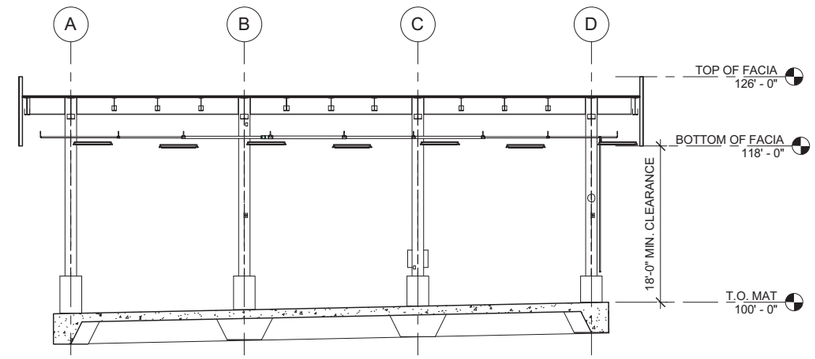

B A-1000 **BUILDING SECTION**

4' 2' 0 4' 8' 12'
1 / 8" = 1' - 0"

NOT FOR CONSTRUCTION
PART B PERMIT APPLICATION

STATE OF NEW MEXICO
DAVID L. WALLERSTEDT
NO. 3132
REGISTERED ARCHITECT

I, David L. Wallerstedt, state that this drawing was prepared under my supervision and all the information presented hereon is true and correct to the best of my knowledge and information.

7-13-11
Date

David L. Wallerstedt, NM R.A. 3132

NO	DATE	CLASS REV	ADC	DESCRIPTION	DWN	DSGN	CHKD	SUB	APP

WEIDLINGER-NAVARRO JV NORTHERN NM

TRU WASTE FACILITY PROJECT

Figure 2-30. Canopy Building Sections

DRAWN	A. GALLEGOS
DESIGN	D. WALLERSTADT
CHECKED	T. LEACH
DATE	07-15-11

BLDG 63-0145 TA- 63

SUBMITTED

APPROVED FOR RELEASE

Los Alamos NATIONAL LABORATORY
PO Box 1663
Los Alamos, New Mexico 87545

SHEET A-3000

105 OF 283

CLASSIFICATION | REVIEWER | DATE

PROJECT ID 102355 | DRAWING NO C55447 | REV D

GENERAL NOTES

1. IF THIS SHEET IS NOT 24" x 36", THEN IT IS A REDUCED SIZE PLOT. USE GRAPHIC SCALE ACCORDINGLY.
2. THIS DRAWING WAS GENERATED IN REVIT 2011 AND DOES NOT FOLLOW LANL DRAFTING STANDARDS.
3. SEE SHEET F-0001 FOR ABBREVIATIONS, GENERAL NOTES AND LEGEND.

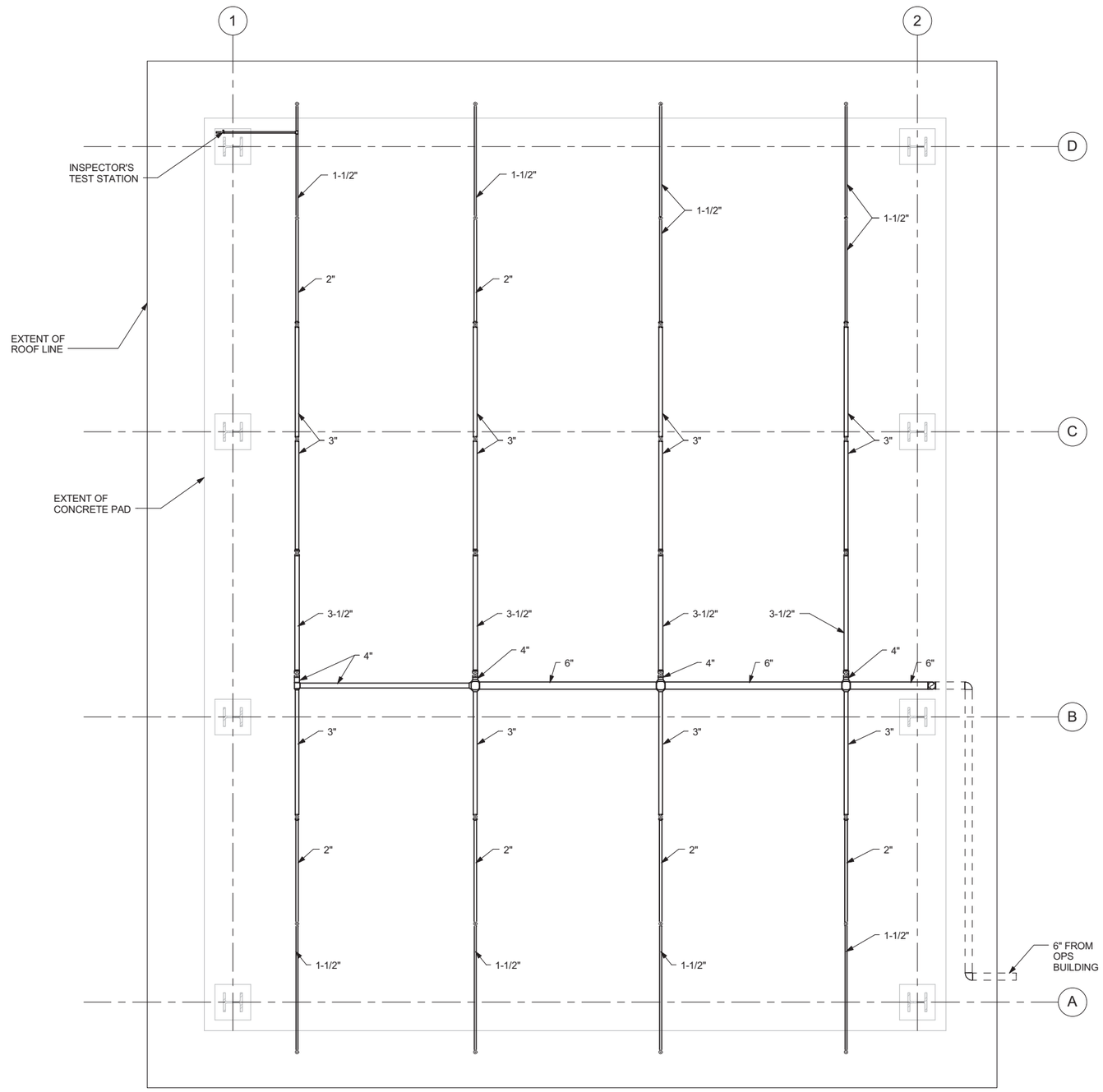

FIRE PROTECTION PLAN

0 1' 2' 4' 6' 8'
1/4"=1'-0"

EDWARD M. MIYODA NEW MEXICO 8263 REGISTERED PROFESSIONAL ENGINEER

I, Edward M. Miyoda, state that this drawing was prepared under my supervision and all the information presented hereon is true and correct to the best of my knowledge and information.

7-13-11 Edward Miyoda
Date Edward M. Miyoda, NM P.E. 8263

NOT FOR CONSTRUCTION
PART B PERMIT APPLICATION

NO	DATE	CLASS REV	ADC	DESCRIPTION	DWN	DSGN	CHKD	SUB	APP

WEIDLINGER-NAVARRO JV NORTHERN NM

TRU WASTE FACILITY PROJECT

Figure 2-31. Canopy Fire Protection Plan

DRAWN	D.BROERMAN
DESIGN	E. MIYODA
CHECKED	C. MOYERS
DATE	07-15-11

BLDG 63-0145 TA- 63

SUBMITTED | APPROVED FOR RELEASE

Los Alamos NATIONAL LABORATORY PO Box 1663 Los Alamos, New Mexico 87545

SHEET F-1000
107 OF 283

CLASSIFICATION | REVIEWER | DATE

PROJECT ID 102355 | DRAWING NO C55447 | REV D

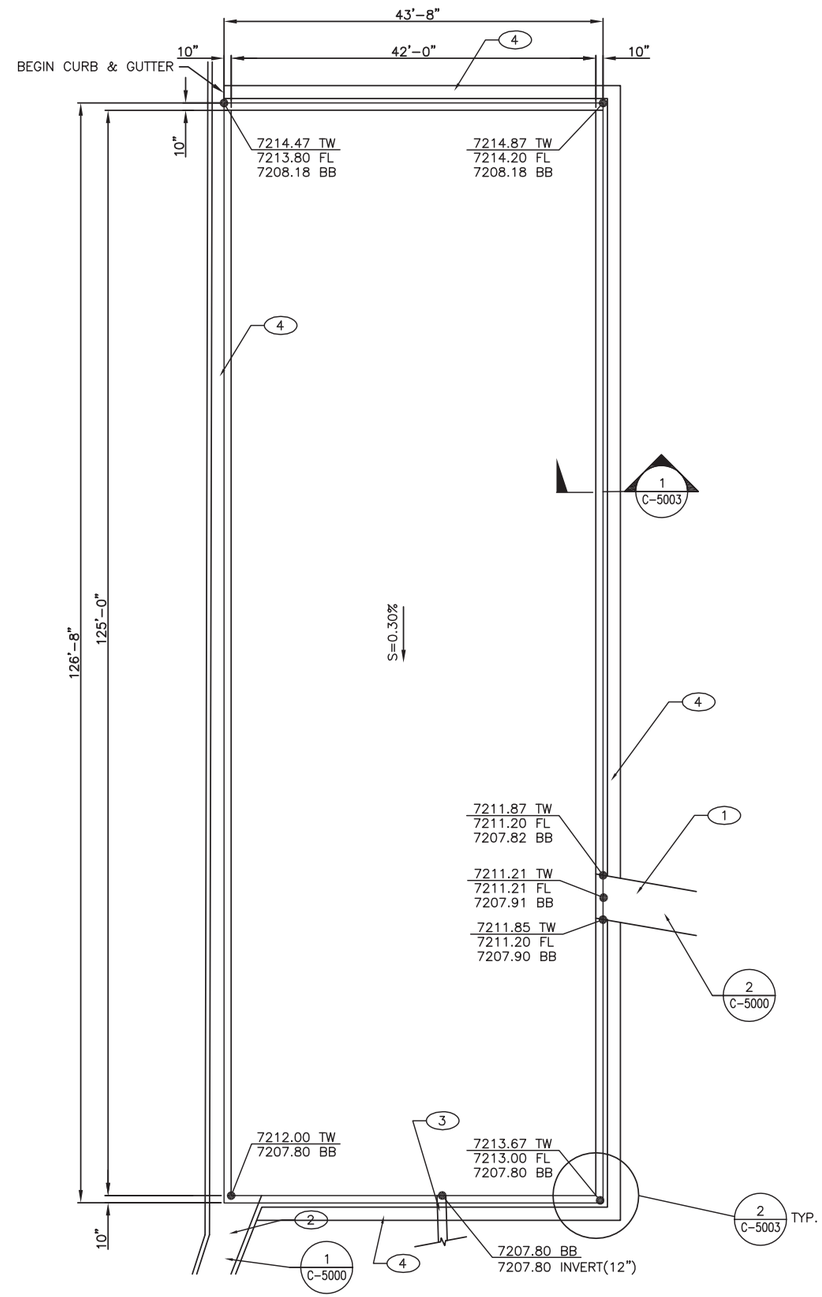

RETENTION BASIN FOUNDATION PLAN

2' 1' 0 2' 4' 6' 8'
3/16"=1'-0"

GENERAL STRUCTURAL NOTES

DESIGN DATA:

REINFORCED CONCRETE
FOUNDATIONS AND CASSIONS– NOMINAL WEIGHT (150 pcf)
REINFORCED CONCRETE
COMPRESSIVE STRENGTH f'c = 4.0 ksi AT 28 DAYS

GRADE 60 REINFORCING STEEL–DEFORMED BARS, ASTM A615, fy = 60 ksi.

MINUMUM SPLICE LENGTH FOR CONTINUOUS #5 REINFORCING = 1'–6"

RETENTION BASIN SLAB AND WALLS SHALL BE WATER CURED PER SPECIFICATIONS.

DO NOT BACKFILL WALLS UNTIL CONCRETE HAS OBTAINED FULL 28 DAY STRENGTH.

SEE SHEET C–1000 FOR LOCATION AND LAYOUT OF RETENTION BASIN.

KEYED NOTES

1. 5' CONCRETE VALLEY GUTTER
2. CONCRETE SPILL WAY
3. 12" CULVERT PIPE WITH GATE VAVLE
4. CONCRETE CURB & GUTTER

NOT FOR CONSTRUCTION
PART B PERMIT APPLICATION

NO	DATE	CLASS REV	ADC	DESCRIPTION	DWN	DSGN	CHKD	SUB	APP

WEIDLINGER-NAVARRO JV NORTHERN NM

TRU WASTE FACILITY PROJECT

Figure 2-32. Retention Basin Foundation Plan

BLDG TA–63

DRAWN	C HOGUE
DESIGN	C TEPEN
CHECKED	T MELTON
DATE	07–15–11

SUBMITTED

APPROVED FOR RELEASE

Los Alamos NATIONAL LABORATORY
PO Box 1663
Los Alamos, New Mexico 87545

SHEET C–1008
13 OF 283

CLASSIFICATION XXX
REVIEWER XXX
DATE

PROJECT ID 102355
DRAWING NO C55443
REV D

EDWARD CORDOVA NEW MEXICO 15788 REGISTERED PROFESSIONAL ENGINEER

I, Edward Cordova, state that this drawing was prepared under my supervision and all the information presented hereon is true and correct to the best of my knowledge and information.

7/13/11
Date

Edward Cordova, NM P.E. 15788

M:\TRN\10-100-205-05\CADD\SHEETS\C-1008.DWG-7/11/2011 1:13 PM

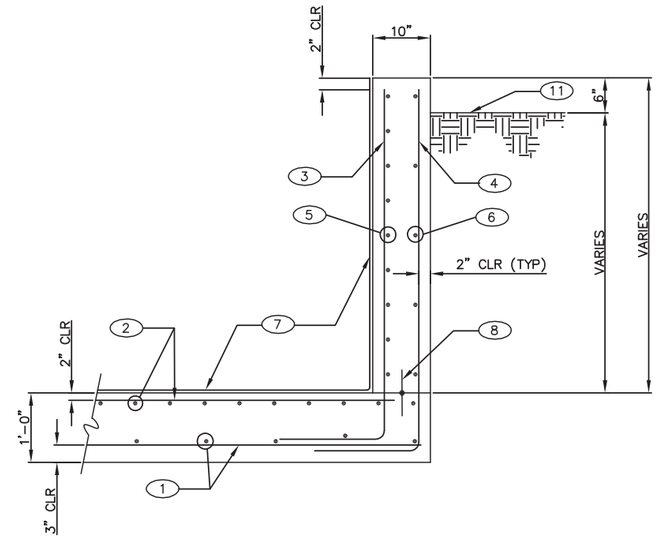

1 C-1008 REINFORCING SECTION @ WALL

1" 1/2" 0 1"
1"=1"

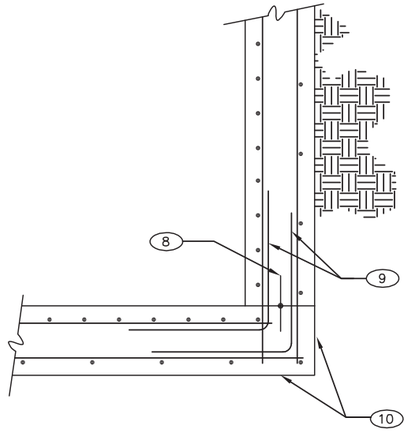

2 C-1008 CORNER REINFORCING

1" 1/2" 0 1"
1"=1"

GENERAL STRUCTURAL NOTES

DESIGN DATA:

REINFORCED CONCRETE
FOUNDATIONS AND CASSIONS– NOMINAL WEIGHT (150 pcf) REINFORCED CONCRETE
COMPRESSIVE STRENGTH f'c = 4.0 ksi AT 28 DAYS

GRADE 60 REINFORCING STEEL–DEFORMED BARS, ASTM A615, fy = 60 ksi.

MINIMUM SPLICE LENGTH FOR CONTINUOUS #5 REINFORCING = 1'–6"

RETENTION BASIN SLAB AND WALLS SHALL BE WATER CURED PER SPECIFICATIONS.

DO NOT BACKFILL WALLS UNTIL CONCRETE HAS OBTAINED FULL 28 DAY STRENGTH.

SEE SHEET C–1000 FOR LOCATION AND LAYOUT OF RETENTION BASIN.

KEYED NOTES

1. SLAB BOTTOM REINFORCING – #5 @ 1'–0" OC EACH WAY
2. SLAB TOP REINF – #5 @ 6" OC EACH WAY
3. VERTICAL REINFORCING @ INSIDE FACE – #5 @ 6" OC W/ 1'–6" LG HOOK AT BOTTOM INTO SLAB
4. VERT REINF @ OUTSIDE FACE – #5 @ 1'–0" OC W/ 1'–6" LG HOOK AT BOTTOM INTO SLAB
5. HORIZ REINF @ INSIDE FACE FACE – #5 @ 6" OC
6. HORIZ REINF @ OUTSIDE FACE – #5 @ 1'–0" OC
7. INTERIOR FACE WATERPROOFING PER SPECIFICATIONS
8. "MASCO" 4" TPE – RUBBER WATERSTOP (CHEMICAL RESISTANT), WITH CENTERBULB DESIGN OR APPROVED EQUAL, CENTERED IN WALL
9. PROVIDE #5 STD 90° HOOKS x 1'–6" LG EA LEG @ CORNER BAR @ EACH HORIZ
10. CONCRETE WALL REINFORCING PER SECTION
11. FINISH GRADE LINE

NOT FOR CONSTRUCTION
PART B PERMIT APPLICATION

EDWARD CORDOVA NEW MEXICO 15788 REGISTERED PROFESSIONAL ENGINEER

I, Edward Cordova, state that this drawing was prepared under my supervision and all the information presented hereon is true and correct to the best of my knowledge and information.

7/13/11 — Date
Edward Cordova, NM P.E. 15788

NO	DATE	CLASS REV	ADC	DESCRIPTION	DWN	DSGN	CHKD	SUB	APP

WEIDLINGER-NAVARRO JV NORTHERN NM

TRU WASTE FACILITY PROJECT

Figure 2-33. Retention Basin Foundation Details

BLDG TA–63

DRAWN	C HOGUE
DESIGN	C TEPEN
CHECKED	T MELTON
DATE	07–15–11

SUBMITTED
APPROVED FOR RELEASE

Los Alamos NATIONAL LABORATORY
PO Box 1663
Los Alamos, New Mexico 87545

SHEET C–5003
17 OF 283

CLASSIFICATION XXX | REVIEWER XXX | DATE

PROJECT ID	DRAWING NO	REV
102355	C55443	A

M:\TRN\10-100-205-05\CADD\SHEETS\C-5003.DWG-7/11/2011 1:16 PM

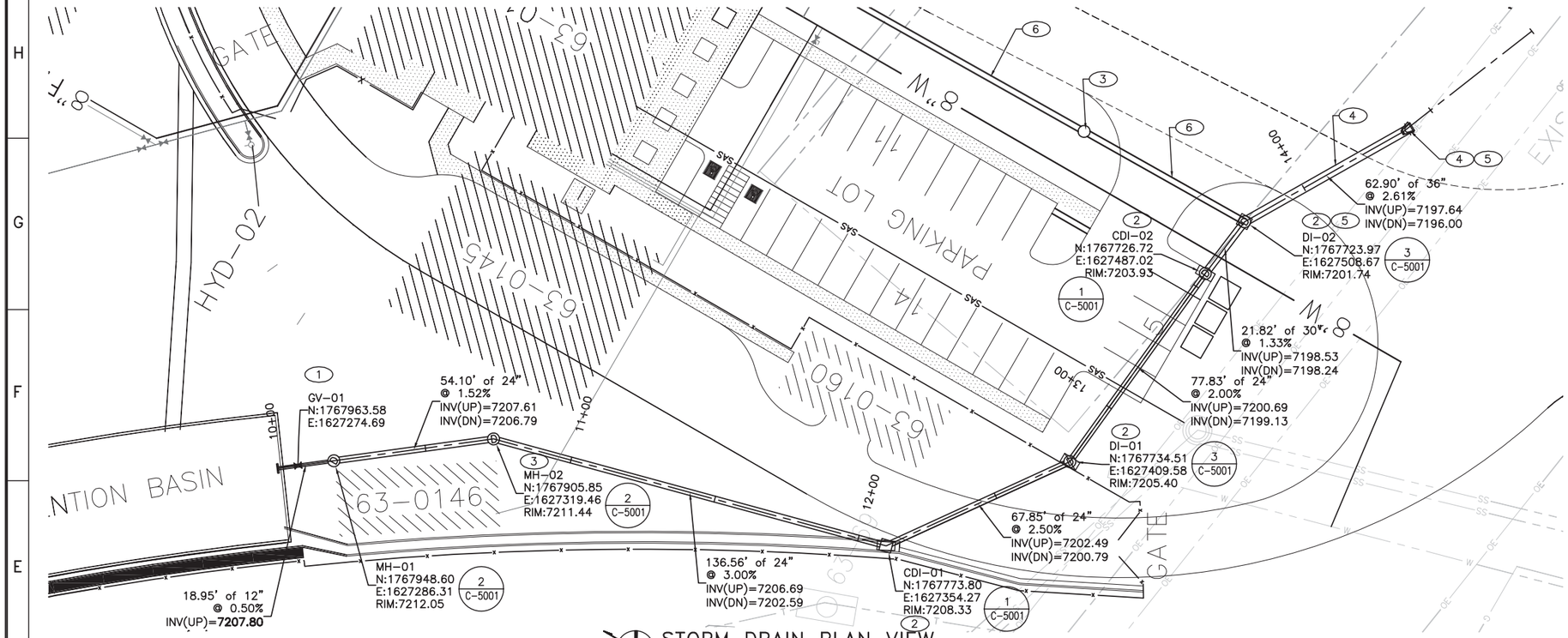

STORM DRAIN PLAN VIEW

1"=20'-0"

GENERAL NOTES

1. FIELD VERIFY ALL DIMENSIONS PRIOR TO CONSTRUCTION.
2. IF THIS SHEET IS NOT 24"x36", THEN IT IS A REDUCED SIZE PLOT. USE GRAPHIC SCALE ACCORDINGLY.
3. EXISTING UTILITY LOCATIONS ARE APPROXIMATE ONLY AND SHALL BE FIELD LOCATED PRIOR TO CONSTRUCTION.

KEYED NOTES

1. 12" GATE VALVE
2. DRAINAGE INLET
3. DRAINAGE MANHOLE
4. CULVERT END SECTION INVERT TO BE DETERMINED BASED ON CMRR PROJECT
5. PART OF CMRR PROJECT. EXACT TIE-IN INFORMATION WILL BE TAKEN FROM FINAL PHASE A/CMRR COORDINATED PLANS.
6. 24" CULVERT PIPE

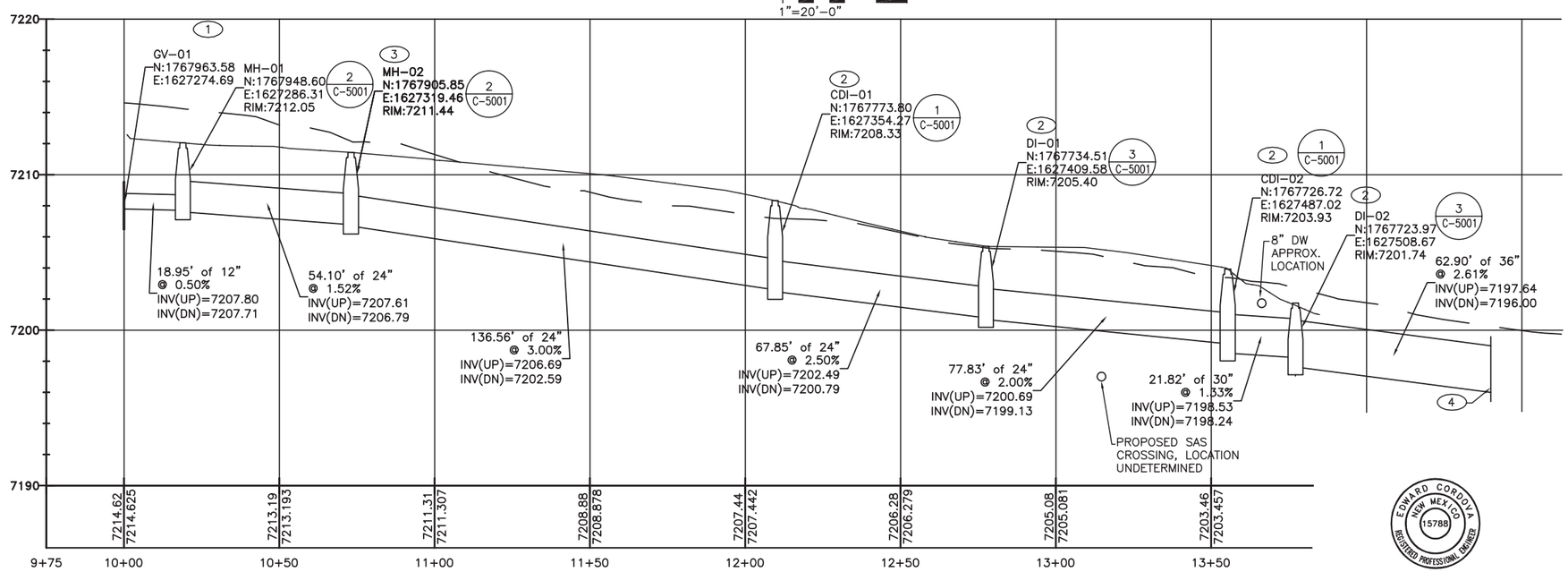

STORM DRAIN PROFILE VIEW

1"=20'-0"

I, Edward Cordova, state that this drawing was prepared under my supervision and all the information presented hereon is true and correct to the best of my knowledge and information.

7/13/11
Date

Edward Cordova, NM P.E. 15788

EDWARD CORDOVA NEW MEXICO 15788 REGISTERED PROFESSIONAL ENGINEER

NOT FOR CONSTRUCTION
PART B PERMIT APPLICATION

NO	DATE	CLASS REV	ADC	DESCRIPTION	DWN	DSGN	CHKD	SUB	APP

WEIDLINGER-NAVARRO JV NORTHERN NM

TRU WASTE FACILITY PROJECT

Figure 2-34. Storm Drain and Profile

DRAWN	D PADILLA
DESIGN	J RAEL
CHECKED	E CORDOVA
DATE	07-15-11

BLDG TA-63

SUBMITTED

APPROVED FOR RELEASE

Los Alamos NATIONAL LABORATORY
PO Box 1663
Los Alamos, New Mexico 87545

SHEET C-1006
11 OF 283

CLASSIFICATION XXX | REVIEWER XXX | DATE

PROJECT ID 102355 | DRAWING NO C55443 | REV D

M:\TRN\10-100-205-05\CADD\SHEETS\C-1006.DWG-7/11/2011 1:11 PM

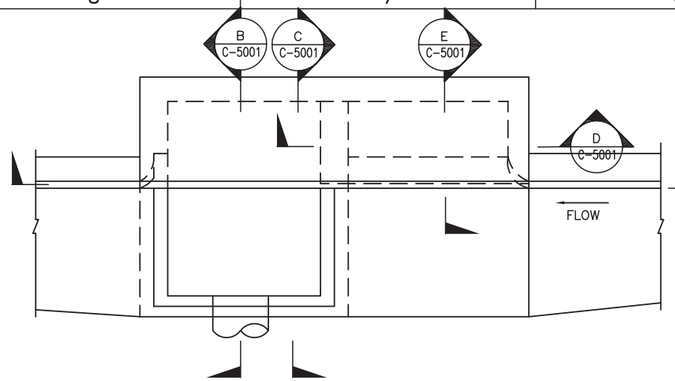

PLAN VIEW

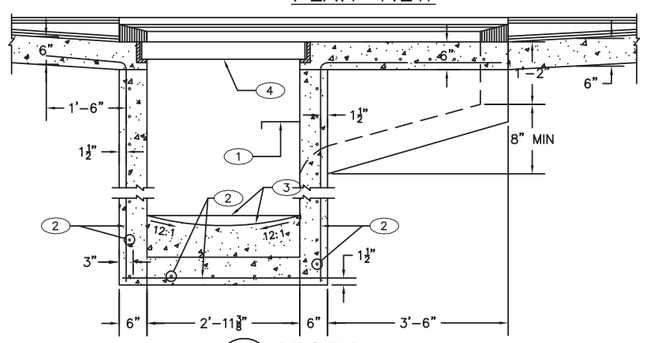

A C-5001 SECTION

1 C-1001 / 1 C-1006 STORM DRAIN CURB INLET DETAIL
SCALE: NONE

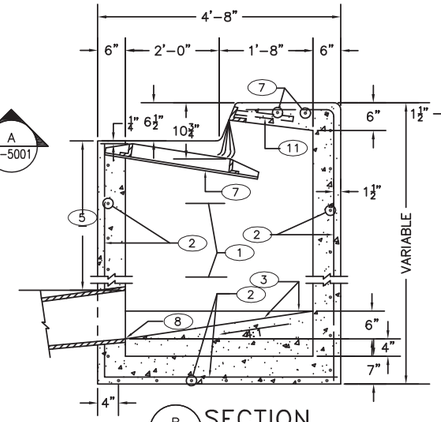

B C-5001 SECTION
SCALE: NONE

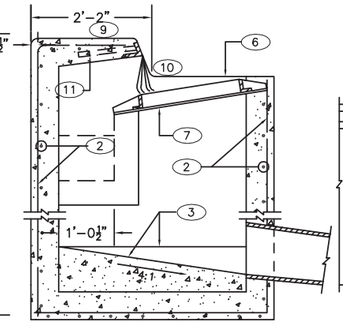

C C-5001 SECTION
SCALE: NONE

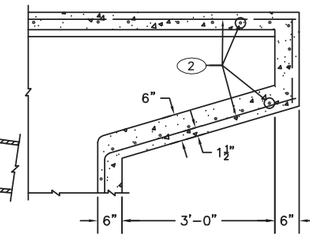

D C-5001 SECTION
SCALE: NONE

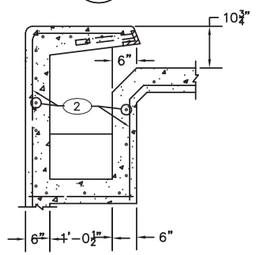

E C-5001 SECTION
SCALE: NONE

GENERAL NOTES

1. IF HDPE STORM DRAIN PIPE IS USED, TRACER WIRE SHALL BE INSTALLED.

KEYED NOTES:

1. FOR STORM INLET DEPTHS GREATER THAN 4', INSTALL STD STEPS. STEPS ARE TO BE INSTALLED ON DOWNSTREAM FACE OF INLET.
2. NO. 4 BARS AT 6" OC EW.
3. CONCRETE FILL MINIMUM SLOPE SHOWN IN SECTION A–C–5000
4. GRATING TO ACCOMMODATE HANDICAP AND BICYCLE TRAFFIC WHERE APPLICABLE
5. 1'–10" MIN UNLESS OTHERWISE DIRECTED.
6. NORMAL GUTTER.
7. GRATE FRAME.
8. INVERT ELEVATION PER DESIGN.
9. TOP OF CURB.
10. FLOWLINE.
11. ANGLE ANCHOR.
12. STOP ALL PIPE 3" TO 6" INTO MANHOLE.
13. CLEAN ALL JOINTS AND INSTALL SEALING GASKETS.
14. GROUT WATER STOP (TYP).
15. TEST STATION WITH 6" CONCRETE COLLAR.
16. DO NOT USE FLAT TOPS IN PARKING LOTS OR ROADWAYS.
17. MASTIC AND/OR GROUT FOR WATER TIGHT SEAL AND THE PREVENTION OF DISPLACEMENT OF RINGS AND COVER.
18. PROVIDE A MINIMUM OF 12" OF SAND BEDDING BETWEEN PIPE AND VERTICAL SIDEWALLS.
19. TRACER WIRE SHALL BE UTILIZED IF STORM DRAIN PIPE IS HDPE.

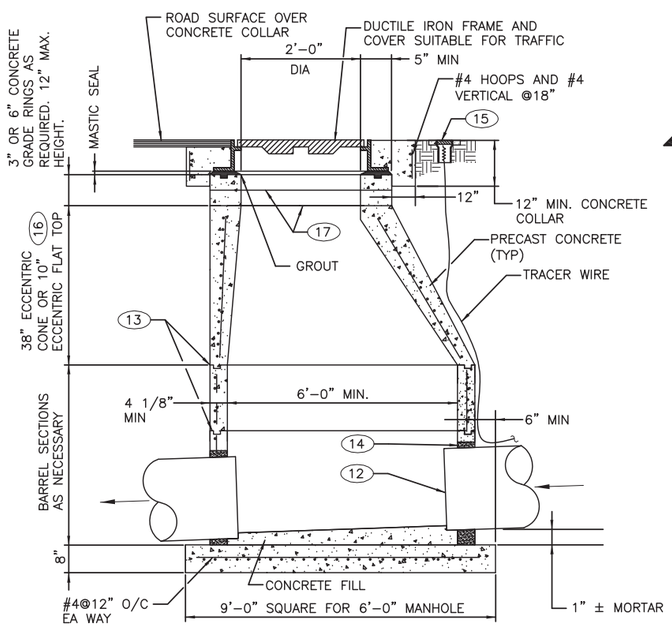

2 C-1006 STORM WATER MANHOLE DETAIL
SCALE: NONE

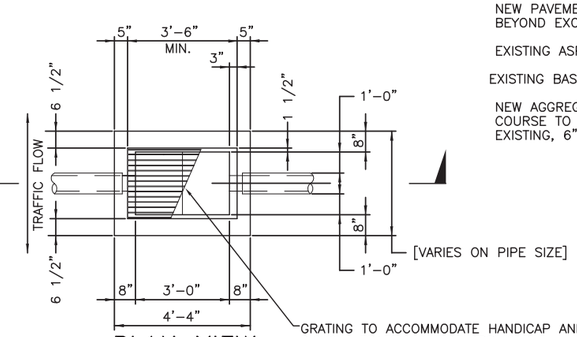

PLAN VIEW

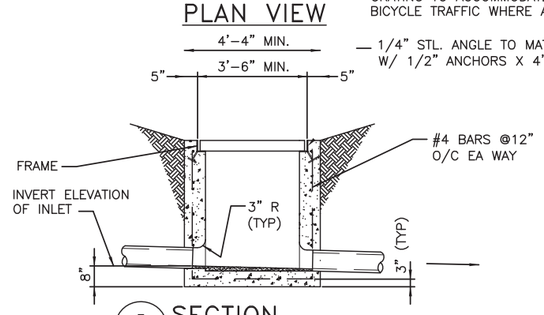

F C-5001 SECTION

3 C-1006 CONCRETE CATCH BASIN DETAIL
SCALE: NONE

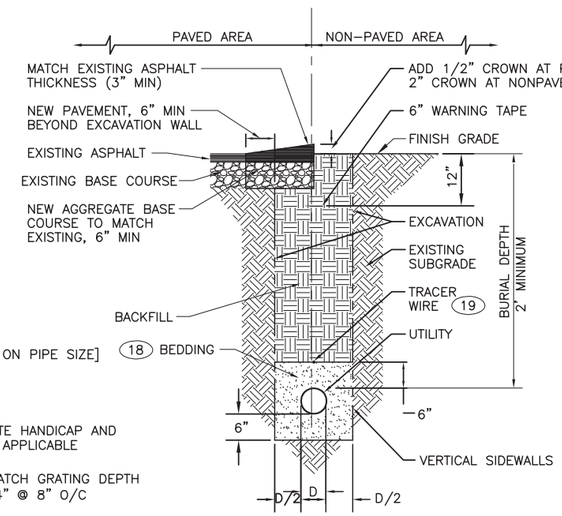

4 C-5001 SINGLE TRENCH DETAIL
SCALE: NONE

NOT FOR CONSTRUCTION
PART B PERMIT APPLICATION

NO	DATE	CLASS REV	ADC	DESCRIPTION	DWN	DSGN	CHKD	SUB	APP

WEIDLINGER-NAVARRO JV NORTHERN NM

TRU WASTE FACILITY PROJECT

Figure 2-35. Storm Drain Inlet Details

DRAWN D PADILLA
DESIGN J RAEL
CHECKED E CORDOVA
DATE 07–15–11

BLDG TA–63
SUBMITTED
APPROVED FOR RELEASE

Los Alamos NATIONAL LABORATORY
PO Box 1663
Los Alamos, New Mexico 87545

SHEET C–5001
15 OF 283

CLASSIFICATION XXX
REVIEWER XXX
DATE

PROJECT ID 102355
DRAWING NO C55443
REV D

EDWARD CORDOVA NEW MEXICO 15788 REGISTERED PROFESSIONAL ENGINEER

I, Edward Cordova, state that this drawing was prepared under my supervision and all the information presented hereon is true and correct to the best of my knowledge and information.

7/13/11
Date
Edward Cordova, NM P.E. 15788

M:\TRN\10-100-205-05\CADD\SHEETS\C-5000.DWG-7/11/2011 1:13 PM

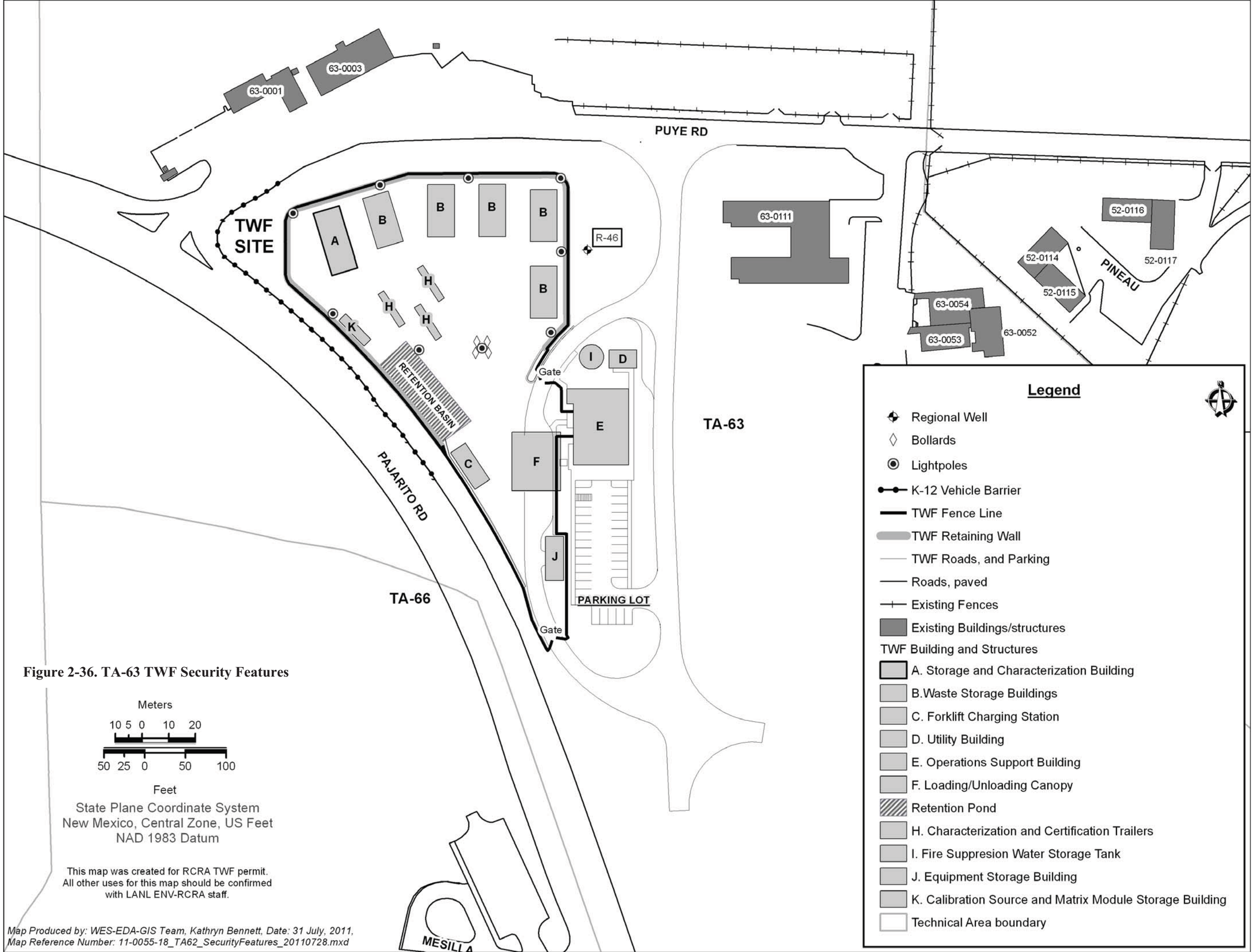

Figure 2-36. TA-63 TWF Security Features

ELECTRICAL SITE PLAN

SCALE: 1" = 50'

0 25' 50' 100' 150'

GENERAL NOTES

1. REFER TO SHEET E-7000 FOR LIGHT FIXTURE SCHEDULE.

KEYED NOTES

1. 50' STEEL POLE FOR LIGHTNING PROTECTION. REF DETAIL 1 FOR FOUNDATION AND GROUNDING REQUIREMENTS.
2. 2-6" PVC
3. 1-2" PVC
4. 3/4" PVC WITH 2#10 AND 1#12 (GR) TO EQUIPMENT STORAGE TRAILER FOR LIGHTING.
5. TERMINATE CONDUIT IN WP BOX MOUNTED 6' UP ON TRAILER. PENETRATE TRAILER WALL WITH 3/4" SLEEVE TO SURFACE MOUNTED BOX INSIDE AND EXTEND CONDUIT AND WIRE TO INTERIOR LIGHTS SEAL WALL PENETRATION.
6. 2-2" PVC
7. INSTALL 4 SPEAKERS (ONE ON EACH QUADRANT) OF POLE AT 1/2" HOLE AND ATTACHMENT BRACKET AT 20' ABOVE BASE.
8. MOUNT PANEL ON EXTERIOR OF BUILDING
9. MAINTAIN SEPARATION TO COMMUNICATION SYSTEM DUCT BANK. REF SHEET T-1000.
10. 30' STEEL POLE FOR AREA LIGHTING. REF DETAIL 2 FOR FOUNDATION AND GROUNDING REQUIREMENTS.

ROSS H. KRAYER NEW MEXICO 5026 REGISTERED PROFESSIONAL ENGINEER

I, Ross H. Krayer, state that this drawing was prepared under my supervision and all the information presented hereon is true and correct to the best of my knowledge and information.

7/13/2011 Ross H. Krayer
Date Ross H. Krayer, NM P.E. 5026

NOT FOR CONSTRUCTION
PART B PERMIT APPLICATION

NO	DATE	CLASS REV	ADC	DESCRIPTION	DWN	DSGN	CHKD	SUB	APP

WEIDLINGER-NAVARRO JV NORTHERN NM

TRU WASTE FACILITY PROJECT

Figure 2-37. Electrical Site Plan

DRAWN	M.MONTANO
DESIGN	M.MONTANO
CHECKED	R.KRAYER
DATE	07-15-11

BLDG 63-0144 1A-63

SUBMITTED APPROVED FOR RELEASE

Los Alamos NATIONAL LABORATORY PO Box 1663 Los Alamos, New Mexico 87545

SHEET E-1000

70 OF 283

CLASSIFICATION XXX REVIEWER XXX DATE

PROJECT ID 102355 DRAWING NO C55443 REV D

GENERAL NOTES

1 THIS DRAWING WAS GENERATED IN REVIT 2011 AND DOES NOT FOLLOW LANL DRAFTING STANDARDS

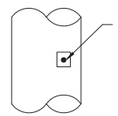

BRACKETS

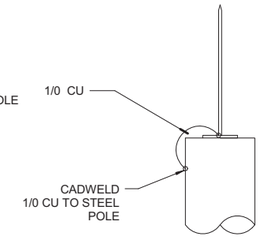

TOP

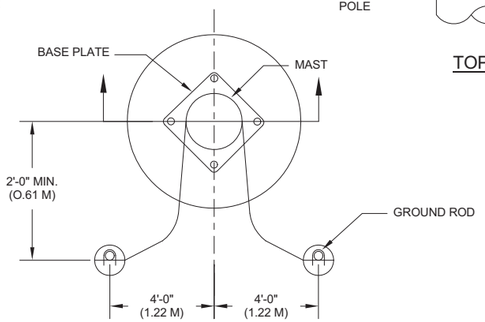

50' PLAN
(SIDE SETTING)

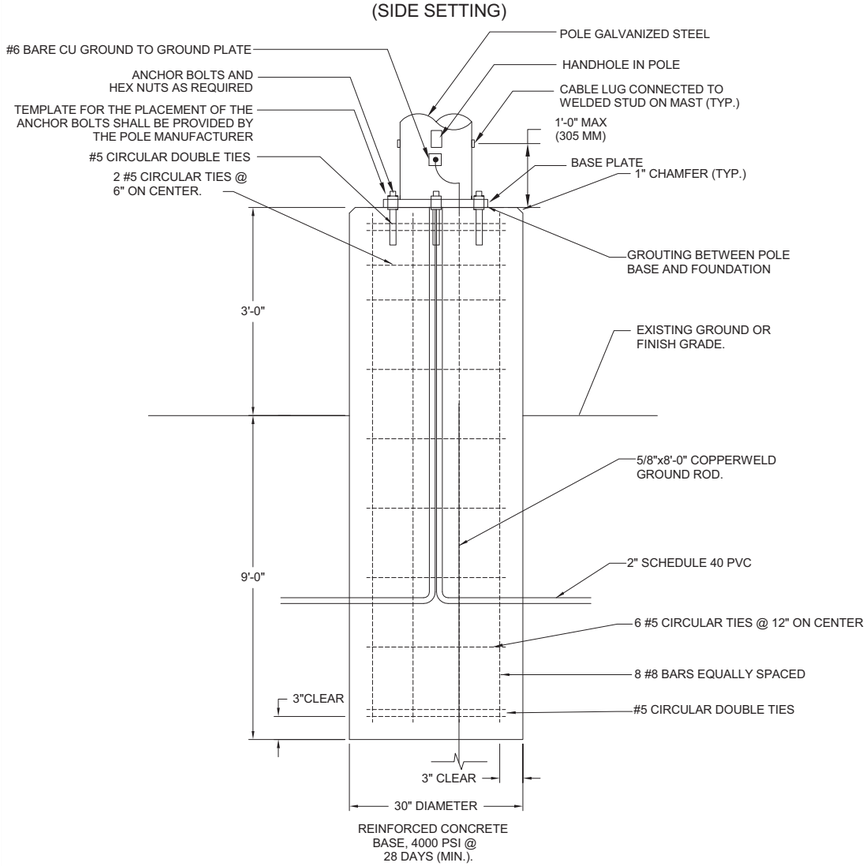

50' POLE FOUNDATION

1 SITE LIGHTING & LIGHTNING PROTECTION POLE DETAIL
E-1000 SCALE: NONE

POLE FOUNDATION DETAIL
SCALE: NONE

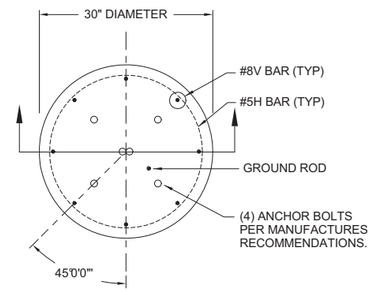

30' PLAN

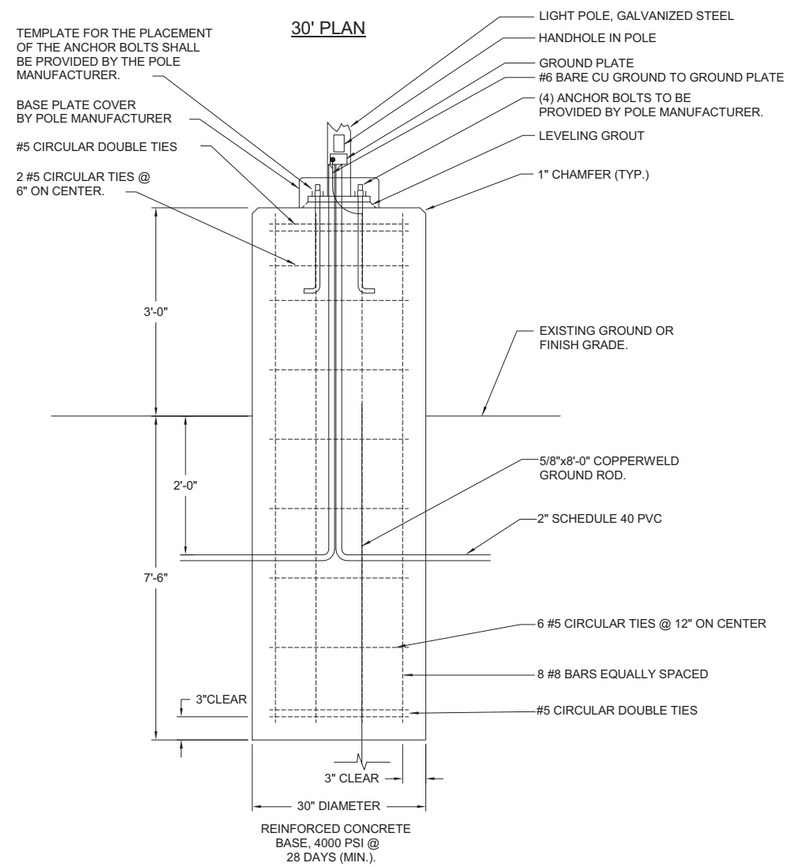

30' POLE FOUNDATION

2 LIGHTING POLE FOUNDATION DETAIL
SCALE: NONE

ROSS H. KRAYER NEW MEXICO 5026 REGISTERED PROFESSIONAL ENGINEER

I, Ross H. Krayer, state that this drawing was prepared under my supervision and all the information presented hereon is true and correct to the best of my knowledge and information.

7/13/2011 Ross H. Krayer
Date Ross H. Krayer NM P.E. 5026

NOT FOR CONSTRUCTION
PART B PERMIT APPLICATION

NO	DATE	CLASS REV	ADC	DESCRIPTION	DWN	DSGN	CHKD	SUB	APP

WEIDLINGER-NAVARRO JV NORTHERN NM

TRU WASTE FACILTY PROJECT

Figure 2-38. Lightning Protection and Lighting Pole Foundation and Grounding Details

DRAWN	M.MONTANO
DESIGN	M.MONTANO
CHECKED	R.KRAYER
DATE	07-15-11

SUBMITTED | APPROVED FOR RELEASE

Los Alamos NATIONAL LABORATORY PO Box 1663 Los Alamos, New Mexico 87545

SHEET E-5003
81 OF 283

CLASSIFICATION	REVIEWER	DATE

PROJECT ID	DRAWING NO	REV
102355	C55443	D

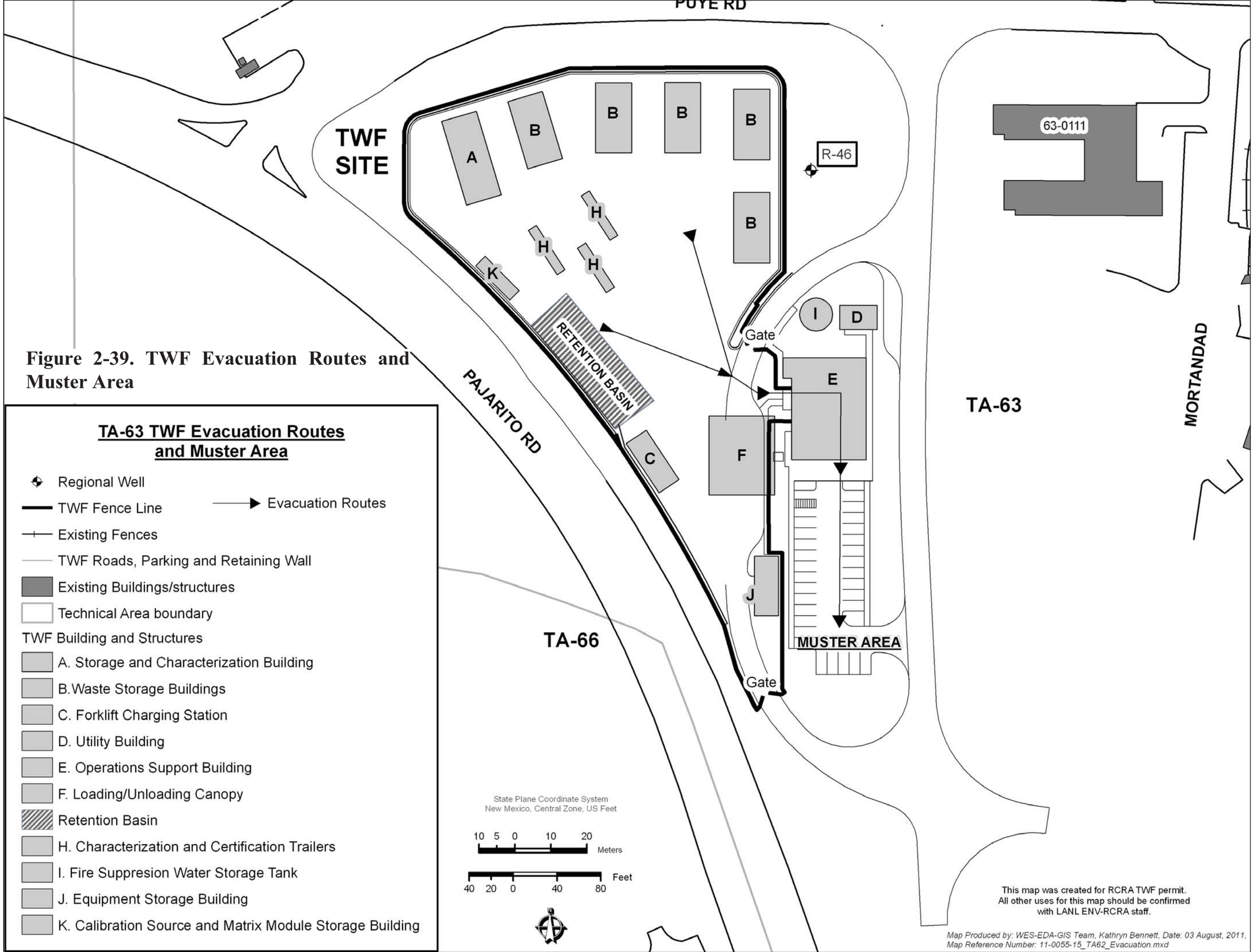

Figure 2-39. TWF Evacuation Routes and Muster Area

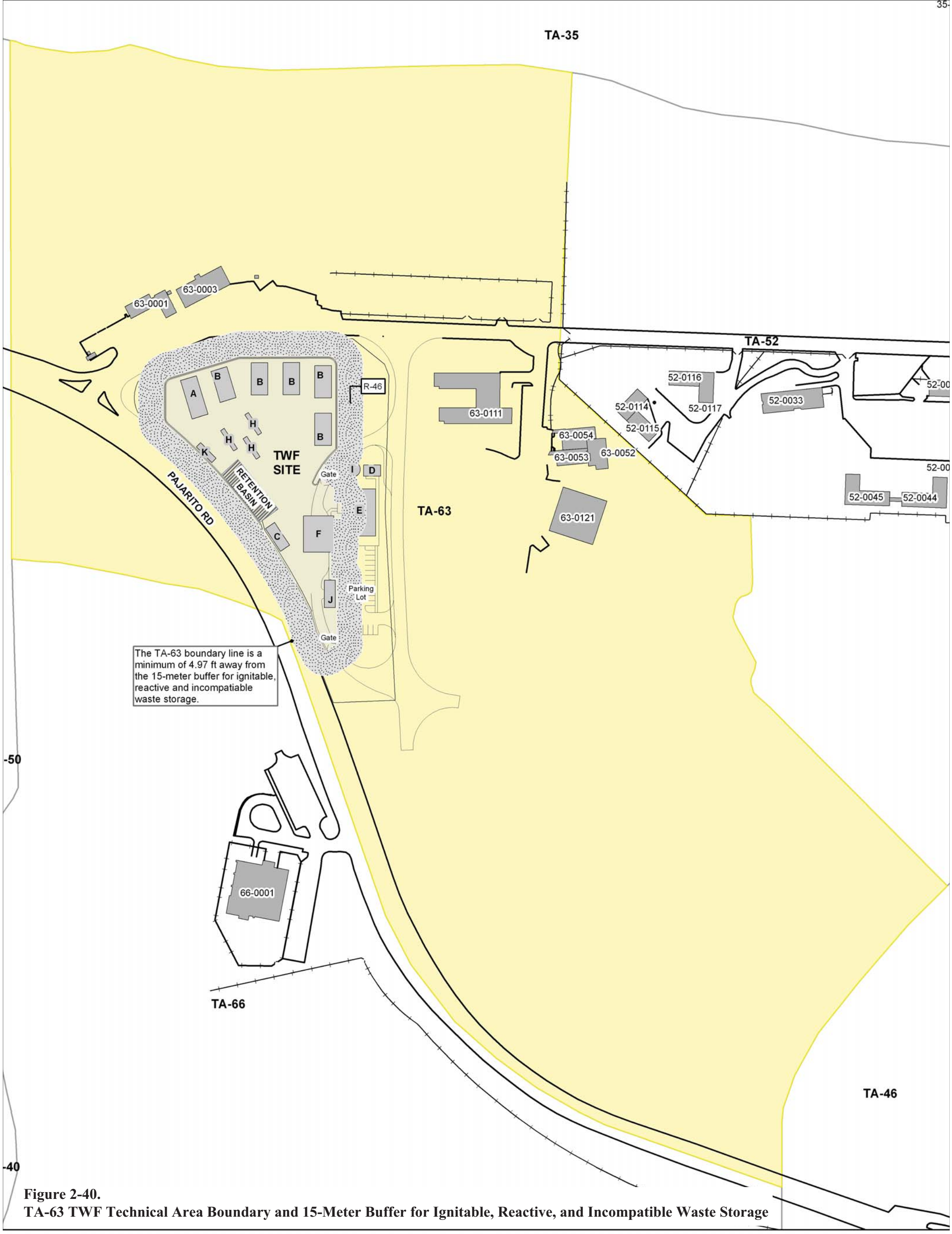

Figure 2-40.
TA-63 TWF Technical Area Boundary and 15-Meter Buffer for Ignitable, Reactive, and Incompatible Waste Storage

TA-63 TWF Technical Area Boundary and 15-Meter Buffer for Ignitable, Reactive, and Incompatible Waste Storage

- Regional Well
- TWF Roads, Parking and Fences
- Roads, paved
- Fences
- Existing Buildings/structures
- TA-63
- Technical Area boundary
- 15-Meter Buffer for Ignitable, Reactive, & Incompatible Waste Storage

TWF Building and Structures

- A. Storage and Characterization Building
- B.Waste Storage Buildings
- C. Forklift Charging Station
- D. Utility Building
- E. Operations Support Building
- F. Loading/Unloading Canopy
- Retention Basin
- H. Characterization and Certification Trailers
- I. Fire Suppresion Water Storage Tank
- J. Equipment Storage Building
- K. Calibration Source and Matrix Module Storage Building

This map was created for RCRA TWF permit.
All other uses for this map should be confirmed with LANL ENV-RCRA staff.

State Plane Coordinate System, New Mexico, Central Zone, US Feet, NAD 1983 Datum

25 12.5 0 25 50 Meters

100 50 0 100 200 Feet

Map Produced by: WES-EDA-GIS Team, Kathryn Bennett, Date: 15 August, 2011, Map Reference Number: 11-0055-14_TA62_15MBuffer.mxd

3.0 FACILITY REQUIREMENTS

This section of the TWF permit modification request addresses facility information requirements including traffic patterns, location information (i.e., seismic standard, floodplain standard, archeological sites), provides a listing and location for required topographic maps, an evaluation of other federal laws, an evaluation of other permit activities, and training specific to the TA-63 TWF Unit.

3.1 TRAFFIC PATTERNS

In accordance with the requirements of 40 CFR §270.14(b)(10), general traffic pattern information, traffic volumes, and traffic control signals for the LANL-wide facility are provided in Appendix A of the LANL General Part B (LANL, 2003). Figure 3-1 illustrates major roads through LANL. Information specific to the TA-63 TWF is provided below.

3.1.1 Routes of Travel

The primary traffic routes used to transport hazardous waste to the TA-63 TWF include Pajarito Road, Puye Road, and the access road along the east side of the unit, see Figure 3-2. Pajarito Road is a primary thoroughfare at LANL; the following Technical Areas are located along this corridor: TA-3, TA-36, TA-48, TA-54, TA-55, TA-63, and TA-54. This road parallels the west and south borders of the TWF site. The TWF site cannot be directly accessed via Pajarito Road. This two-lane road was built for 55 mph traffic with no vehicle size restrictions, and only limited heavy truck and fuel-truck traffic prohibitions. Puye Road is a secondary two-lane road connecting Pajarito Road and TA-5, TA-52, and TA-63. Vehicle barriers will be used to protect the TWF from Pajarito and Puye Road traffic.

Waste transportation trucks that enter the TWF will park beneath a canopy to the west of the Operations Support Building for loading and unloading activities. A bump out is provided in the driveway to allow forklift access. The canopy is designed to permit covered access on three sides of the truck for work in any weather. Loaded electric forklifts will transport waste containers north and west of the canopy to the Characterization Trailers, the Storage Buildings, and the Storage and Characterization Building.

Other than electric forklifts, it is anticipated that the only vehicle traffic within the TWF controlled area would be semi-trucks (for occasional placement and removal of the characterization trailers), delivery trucks with specialty gases (for characterization and radiation protection equipment), and snow removal equipment. The site has been designed to provide clearance for the movement of the characterization trailers. However, due to the relatively small size of the site, removal of a particular trailer may require temporary shifting of other trailers.

It is anticipated that gas bottles for the specialty gases will be unloaded at the canopy and then transported with forklifts into the controlled area. There will be a single large Dewar flask for liquid nitrogen located near the receiving area and Operations Support Building. This flask will be replenished from a truck transporting liquid nitrogen. Smaller containers will be filled from the Dewar flask and transported (fork lift, dolly, cart, as needed) to the point of use in the

characterization trailers.

Snow removal equipment such as blade equipped all-terrain vehicles may also be used. Snow removal equipment such as snow plows may be used for heavy snows, but those vehicles would not be used near waste containers stored outside, would be escorted by TWF personnel, and would be limited to speeds less than ten miles per hour. If snow removal in the vicinity of waste containers stored outside is needed, snow shovels or a snow blower will be used. Other vehicles or equipment that may be required to perform maintenance within the TWF will also be escorted and limited to speeds less than 10 miles per hour.

3.1.2 Traffic Volumes

Pajarito Road has an average daily traffic volume of approximately 4000 vehicles per 24-hour day (LANL, 2008). This includes vehicles traveling both northwest and southeast. Vehicle types include cars, light- and medium-duty trucks, and vans. Traffic volume at the TWF will not be high. Anticipated traffic volumes at the TWF will be from one to several waste shipments by truck to or from the loading/unloading canopy per day, forklift traffic within the unit, occasional delivery trucks for analytical gases and other supplies, and, rarely, waste characterization trailer movement. Daily use of the Operations Building parking area is anticipated for twenty to thirty vehicles, government-use and privately-owned vehicles (POV).

3.1.3 Traffic Control Signals

Roadway access to the TWF site is required for POV, site vehicles, tractors/semi-trailers, other waste trucks, delivery vehicles, and characterization trailers. Traffic control signals within and around TA-63 will include stop signs, posted speed limits, and other traffic and pedestrian control signs. The locations of existing and proposed signals and signs near the TWF are shown in Figure 3-3.

3.1.4 Road Surfacing and Load-Bearing Capacity

Roads within TA-63 are generally two-lane roads with asphaltic concrete surfaces. Load-bearing capacity for these roads is 32,000 pounds per axle. These roads are typically constructed with a 6-inch-thick base course overlain with a 3-inch-thick asphaltic concrete surface. These roads were designed and constructed to meet the American Association of State Highway and Transportation Officials Specification HS-20.

The reinforced concrete pad within the TWF boundary will be constructed to be nominally 8 inches thick in traffic bearing areas. This will meet American Concrete Institute (ACI) 360 R-92 standards for design of slabs on grade for this type of structure.

3.2 LOCATION INFORMATION

3.2.1 Seismic Standard

The proposed TWF is in compliance with the seismic location standards of 40 CFR 270.14(b)(11) and 264.18(a). These regulations require seismic studies for new facilities to demonstrate that evidence of Holocene faulting is not found within 200 feet of the waste management unit. The seismic investigation included in Attachment D, *Seismic Report,* of this permit modification request demonstrates that there has been no direct evidence observed for Holocene faulting within that radius of the TWF.

Site specific geologic investigations at TA-63 have revealed the apparent presence of lineaments near this location, i.e., topographic features of regional extent that may reflect crustal structure within 3,000 ft. However, trench excavation and mapping of these lineaments indicates that they do not correlate with known Holocene faults. Published geologic studies in and around TA-63 (including several lengthy geologic test trenches excavated in 1992-1993), together with aerial reconnaissance of the area within a 5-mi radius from the proposed TWF, and the field reconnaissance of the lineaments and contact elevations, combine to demonstrate that no faults with Holocene displacement are present within 200 ft of the proposed TWF. Aerial reconnaissance, detailed geologic mappings of portions of LANL, and paleoseismic trenching investigations show that the focus of potential Holocene faulting at LANL is concentrated along the main Pajarito fault, over 16,000 ft (4877 m) west of the proposed TWF.

3.2.2 Floodplain Standard

Pursuant to the requirements of 270.14(b)(19)(ii), LANL has mapped all 100-year floodplain boundaries within the LANL complex, as required in "*Module VIII: Special Conditions Pursuant to the 1984 Hazardous and Solid Waste Amendments to RCRA for Los Alamos National Laboratory*, EPA I.D. NM0890010515" (EPA, 1998). The latest version of these maps including revisions after the Cerro Grande Fire was published in a report documenting the floodplain mapping procedures (McLin et. al., 2001).

The flood plains near TWF are shown in Figure 3-4 of this permit modification request. The TA-63 TWF is located on a mesa top between Mortandad Canyon on the north and Pajarito Canyon on the south. The proposed site for the TWF is located approximately 150 vertical ft above the floodplain limits for Mortandad Canyon at a distance of approximately 2000 ft. The site is located approximately 200 vertical ft above the floodplain limit for Pajarito Canyon at a distance of approximately 1000 ft. The site is also at the head of the Canada del Buey, thereby assuring surface water drainage to the east. Therefore, the TWF is not located within the 100-year floodplain boundary in accordance with 40 CFR §§ 270.14(b)(11)(iii through v).

3.2.3 Cultural Resources

Cultural resources are human imprints on the landscape and are defined and protected by a series of federal laws, regulations, and guidelines as described in *A Plan for the Management of the Cultural Heritage at Los Alamos National Laboratory, New Mexico* [LANL 2006]. The three general categories of cultural resources at LANL are archaeological resources, historic buildings and structures, and traditional cultural properties. Archaeological resources include any material remains of past human life or activities which are of archaeological interest. Historic buildings include buildings or other structures constructed after 1942 and LANL-era buildings that have been evaluated for eligibility to the National Register of Historic Places (NRHP). Traditional cultural properties are defined as a place of special heritage value to contemporary communities, often, but not necessarily American Indian groups. A total of 1802 archaeological sites at LANL have been determined eligible or potentially eligible for listing in the NRHP, along with 371 historic buildings and structures. None are within or immediately adjacent to the footprint of the TRU Waste Facility.

3.3 TOPOGRAPHIC MAPS

Topographic maps and figures are provided in this Permit modification request or referenced to

meet the requirements of 40 CFR § 270.14(b)(19). The maps clearly show the map scale, the date of preparation, and a north arrow. The maps and figures used to fulfill these regulatory requirements in this submittal include the following:

- Access roads and control features for the TA-63 TWF, Figure 3-3.
- 100-year flood plain adjacent to TA-63, Figure 3-4.
- Surface waters, including intermittent streams, near TA-63, Figure 3-4.
- Surrounding land uses (e.g., residential, recreational) are depicted on Figure 2-2.
- Windroses of average wind speed and direction day and night, measurements collected at four primary measurement stations at LANL in 2009, Figure 3-5.
- Legal boundaries of LANL (including TA-63), Figure 2-3.
- A topographic map of buildings and structures within a 1000 foot radius of the TWF at TA-63, Figure 2-4.
- A map of National Pollutant Discharge Elimination System outfall locations, Figure 3-6.
- Storm and process sewer systems at TWF, Figure 3-7.
- Drainage control features of the TWF, Figures 2-5, 2-34, and 2-35.
- Natural surface drainages are shown on the topographic map included as Figure 3-8.
- Fire stations serving LANL and the County of Los Alamos are shown on Figure 3-9, as well as Attachment N, Fig. 49, of the Permit.
- Map of supply wells, monitoring wells, test wells, springs, and surface-water sampling stations near TA-63, Figure 3-10.
- A map showing all existing and proposed wells and boreholes within an approximate one-mile radius of TA-63 is included as Figure 3-11.

Contour lines on all topographic maps are in intervals sufficient to detail natural drainage at LANL and in the vicinity of the waste management unit. As provided in 40 CFR § 270.14(b)(19), LANL has submitted the maps to the NMED at these scales and contour intervals due to the size of the waste management unit, the extent of the LANL facility, and the topographic relief in the area.

3.4 GROUNDWATER MONITORING

The groundwater monitoring requirements of 40 CFR Subpart F do not apply to the TWF as it is not a regulated unit as defined at 40 CFR 264.90(a)(2). The site is for storage in contained structures only and no spills have occurred. The groundwater monitoring well (R-46) outside the north east fence line of the TWF is included in the LANL groundwater monitoring program but is not associated with this container storage unit.

3.5 OTHER FEDERAL LAWS

The following federal laws are required under 40 CFR §§ 270.3 and 270.14(b)(20), to be given consideration when applying for a hazardous waste facility permit. When any of these laws is applicable, its procedures must be followed:

The Wild and Scenic Rivers Act (16 United States Code [USC] 1273 et seq.). This act provides for a national wild and scenic rivers system and prohibits construction of any waterway that would have a direct adverse effect on the values for which a wild and scenic river was established.

The National Historic Preservation Act of 1966 (16 USC 470 et seq.). This act establishes a program for the preservation of historic properties throughout the country. The act has provisions that require mitigation of adverse effects to registered properties.

The Endangered Species Act of 1973 (16 USC 1531). This act provides for the conservation of endangered and threatened species of fish, wildlife, and plants. The act prohibits any action that would jeopardize the continued existence of any endangered or threatened species or adversely affect its critical habitat.

The Coastal Zone Management Act of 1972 (16 USC 1451 et seq.). This act establishes national policy for the management, use, protection, and development of land and water resources of the nation's coastal zones. Section 307(c) of the act and implementing regulations prohibit the U.S. EPA from issuing a permit for activity affecting coastal zone land or water without the certification from the applicant that the activity is in compliance with the state Coastal Zone Management Program.

The Fish and Wildlife Coordination Act of 1934, as amended (16 USC 661 et seq.). This act promotes the conservation of wildlife, fish, and game and integrates this conservation with water resource projects. Certain provisions of the act require that permits proposing or authorizing the impoundment, diversion, or other control or modification of any body of water be considered by the appropriate state agency for impacts to wildlife resources.

Because LANL has ongoing programs in support of the National Historic Preservation Act, the Endangered Species Act, and the Fish and Wildlife Coordination Act, consideration was given to these federal laws.

The National Historic Preservation Act is administered by the Advisory Council on Historic Preservation, appointed by the President, and the New Mexico State Historic Preservation Office. Section 106 of the Act requires DOE to consider the effects of its actions on historic properties, and provide the Council with a reasonable opportunity to comment on those actions and the manner in which DOE takes historic properties into account in their decisions. DOE accomplishes this through consultation with the State Historic Preservation Office whenever a project may potentially impact a historic property. LANL may prepare a Historic Building Survey Report assessing the eligibility of a historic building dating from the Manhattan Project and early Cold War periods (1943 to 1956) for the National Register of Historic Places and evaluating the impacts of the proposed actions. The consultation process was formalized in April 2000 through a Programmatic Agreement between DOE, the Council, and the State.

For any undertaking on DOE land that may directly or indirectly impact threatened and endangered (T&E) species or their habitat, DOE must consult with the U.S. Fish and Wildlife Service (USFWS), as provided under Section 7 of the Endangered Species Act. Similarly, DOE must consult with the USFWS for projects that would impound, divert, or otherwise control or modify a body of water, as required by the Fish and Wildlife Coordination Act.

For Endangered Species Act compliance, LANL may prepare a Biological Assessment to document the presence of T&E species and to evaluate the impacts of a project on a listed

species or its habitat. DOE will then request in writing that the USFWS concurs with DOE's findings in the Biological Assessment. In recent years, DOE and LANL have streamlined the consultation process by preparing a T&E Species Habitat Management Plan. This plan fulfills the provisions of the Endangered Species Act that require federal agencies to carry out programs for the conservation of T&E species and their habitat. The USFWS approved this plan in February 1999.

Provisions in the Wild and Scenic Rivers Act and the Coastal Zone Management Act are not applicable to LANL's activities.

Consideration will be given to Executive Orders, issued by the President, that are relevant to waste management activities at LANL. When any of these Orders is applicable, its provisions will be followed. Requirements for Executive Orders are reserved in 40 CFR § 270.3(f).

3.6 OTHER PERMIT ACTIVITIES

Other types of RCRA permits include, but are not limited to, the following;

- Permits by Rule
- Emergency Permits
- Hazardous Waste Incinerator Permits
- Permits for Land Treatment Demonstrations Using Field Test or Laboratory Analyses
- Interim Permits for Underground Injection Control Program Wells
- Research, Development, and Demonstration Permits
- Permits for Boilers and Industrial Furnaces Burning Hazardous Waste.

None of these permit types are relevant for the proposed waste storage operations at TA-63.

3.7 TRAINING

In accordance with 40 CFR §§ 270.14(b)(12) and 264.16 and Permit Section 2.7, *Training*, training requirements for treatment, storage, and disposal facility workers at LANL are addressed in Attachment F, *Training Plan*, of the Permit. The training program instituted at the Facility includes a combination of Facility-wide courses, permitted unit-specific training, and on-the-job training (OJT). Facility-wide courses are provided internally or through external vendors and are usually classroom-based. Permitted unit-specific training may be developed and delivered within a particular permitted unit, and OJT consists of supervised and documented training focused primarily on procedures performed by individual workers.

All TWF employees and contract and support personnel who handle hazardous and/or mixed waste at the unit will receive the appropriate level of training within six months of their date of hire or transfer for work. Personnel will not be allowed to work in unsupervised waste handling positions at the TWF until they have successfully completed the appropriate level of training for their positions and responsibilities as included in Table F-1 of Attachment F of the Permit at a minimum.

Records of Facility-wide training currently sponsored or administered by central training personnel are entered by that group into the UTrain System, the official Facility training

database, and these records document that the required training has been successfully completed by the TWF workers. LANL will retain these training records in accordance with Permit Section 2.12.2, *Facility Operating Record*.

3.8 LAND DISPOSAL RESTRICTIONS

Wastes managed at the TWF will be subject to the Land Disposal Restrictions of 40 CFR Part 268, as implemented by Permit Section 2.3, *Land Disposal Restrictions*.

[This page has been left intentionally blank.]

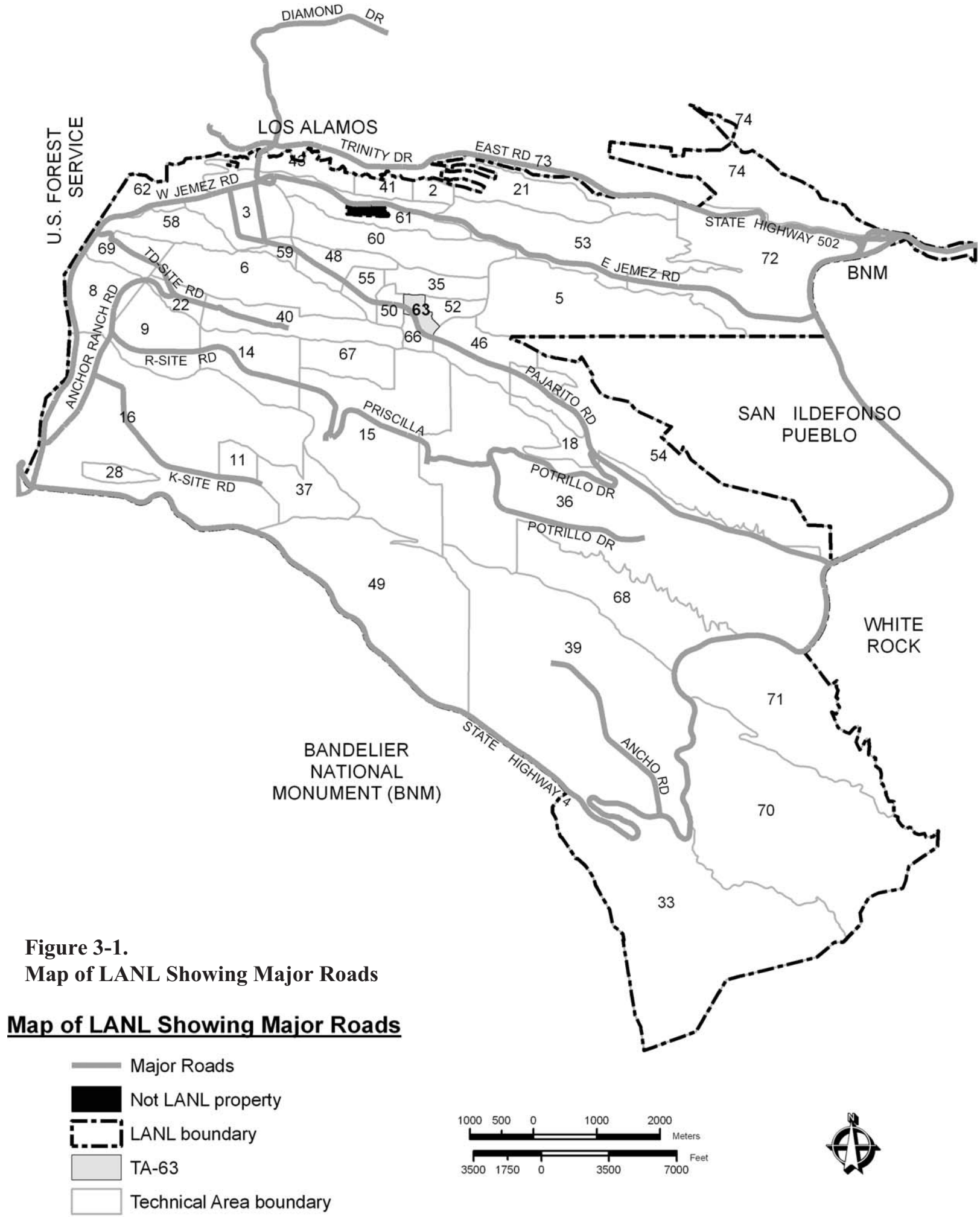

Figure 3-1.
Map of LANL Showing Major Roads

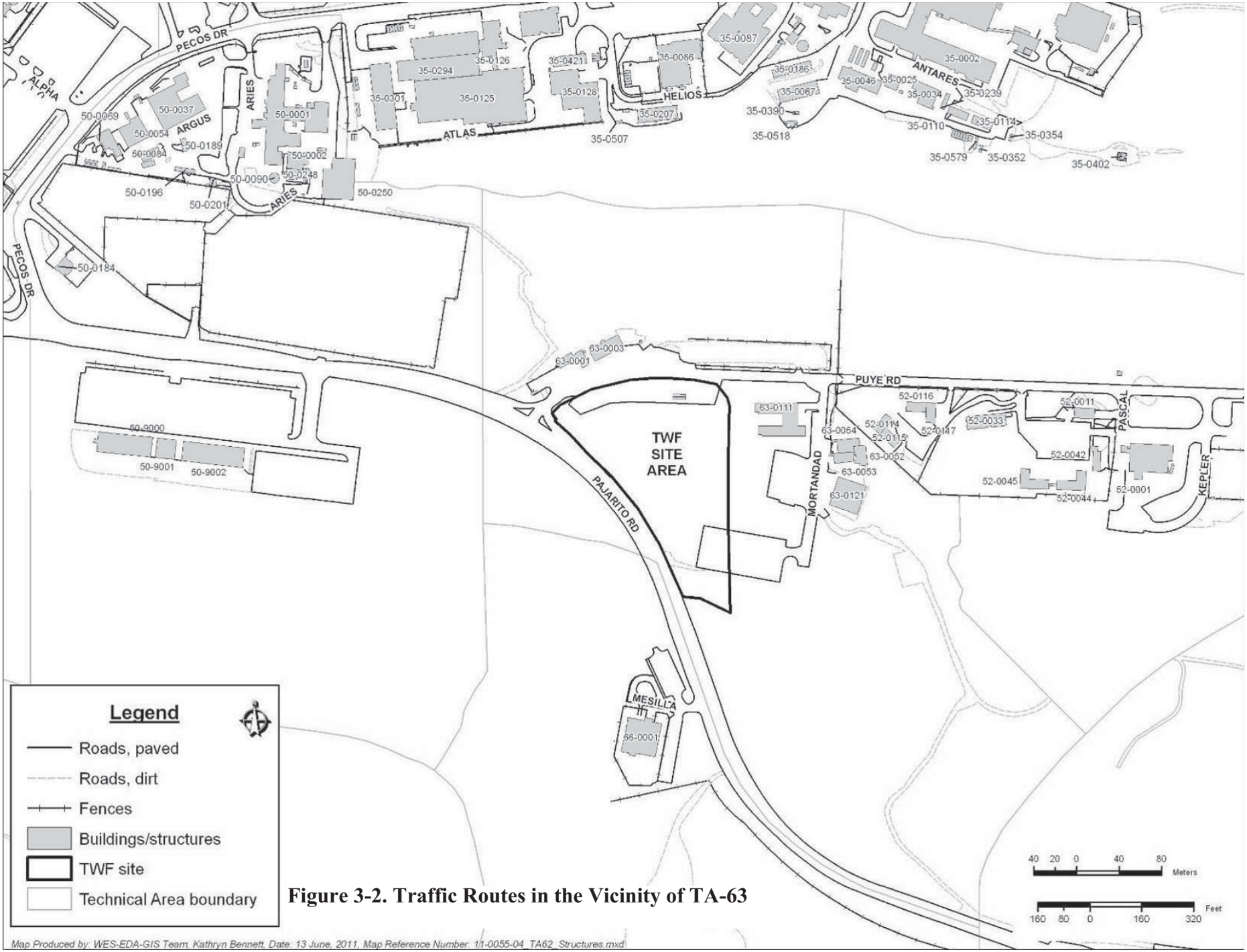

Figure 3-2. Traffic Routes in the Vicinity of TA-63

Figure 3-3. Access Roads and Traffic Control Signs in the Vicinity of the TWF Unit

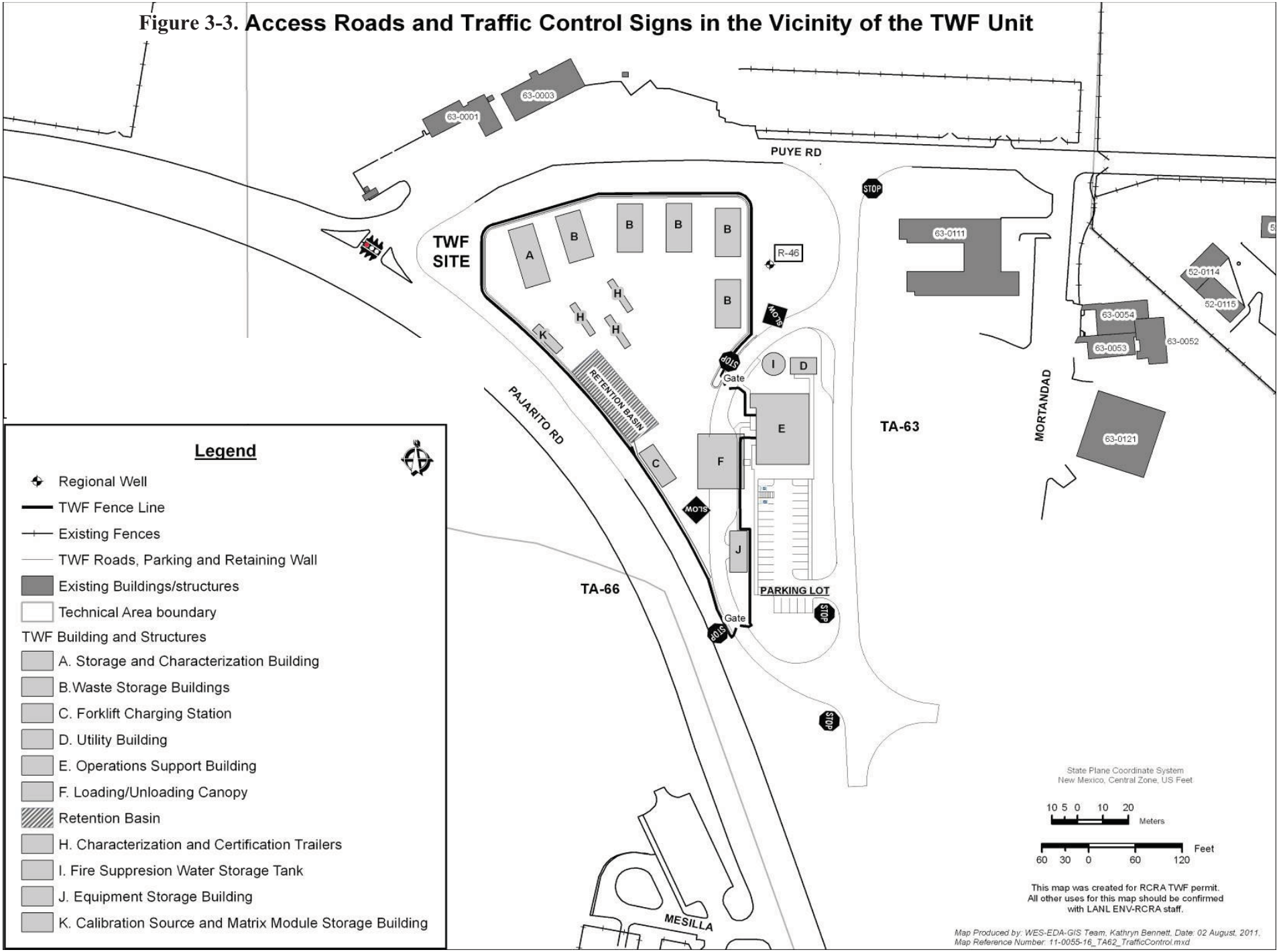

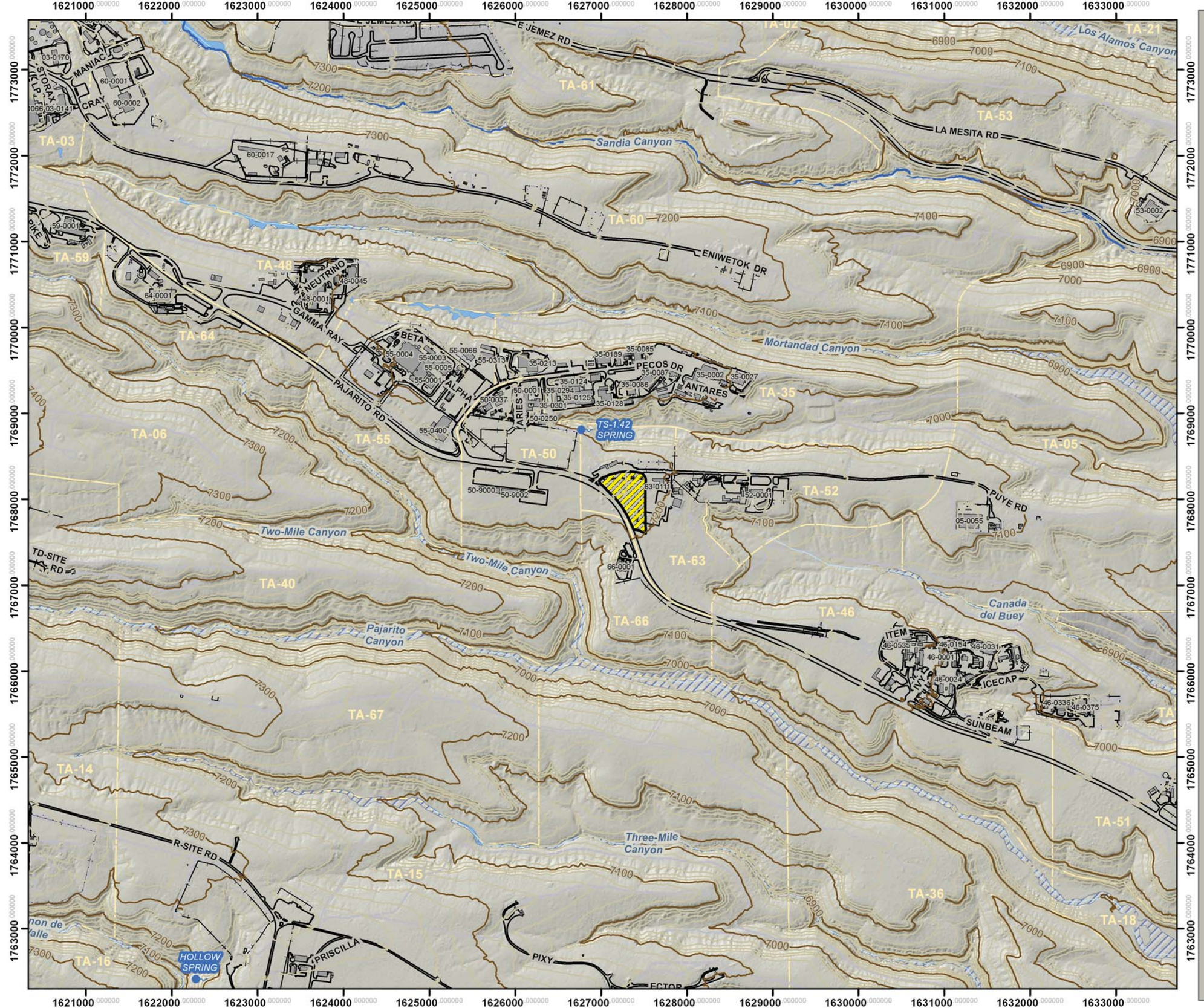

Figure 3-4.
Surface Water and Floodplains

Legend

- Springs
- Streams, perennial
- Drainages
- Contours, 100 ft
- Contours, 20 ft
- Roads, paved
- Roads, dirt
- Fences
- Wetlands
- Floodplains
- Buildings/structures
- TWF site
- Technical Area boundary

Kilometers

0.25 0.125 0 0.25 0.5

1000 500 0 1000 2000

Feet

New Mexico State Plane Coordinate System,
Central Zone, Units in Feet.
North American Datum 1983.

Reference Grid interval equals 1000 ft

DISCLAIMER: This map was created for work processes associated with LANL TA-63 TWF Permit Modification Request. All other uses for this map should be confirmed with LANL staff.

Map Produced by: WES-EDA-GIS Team, Kathryn Bennett.
Date: 14 July, 2011
Map Reference Number: 11-0055-09_TA63_WaterFeatures_NoTitle.mxd

Los Alamos NATIONAL LABORATORY EST. 1943

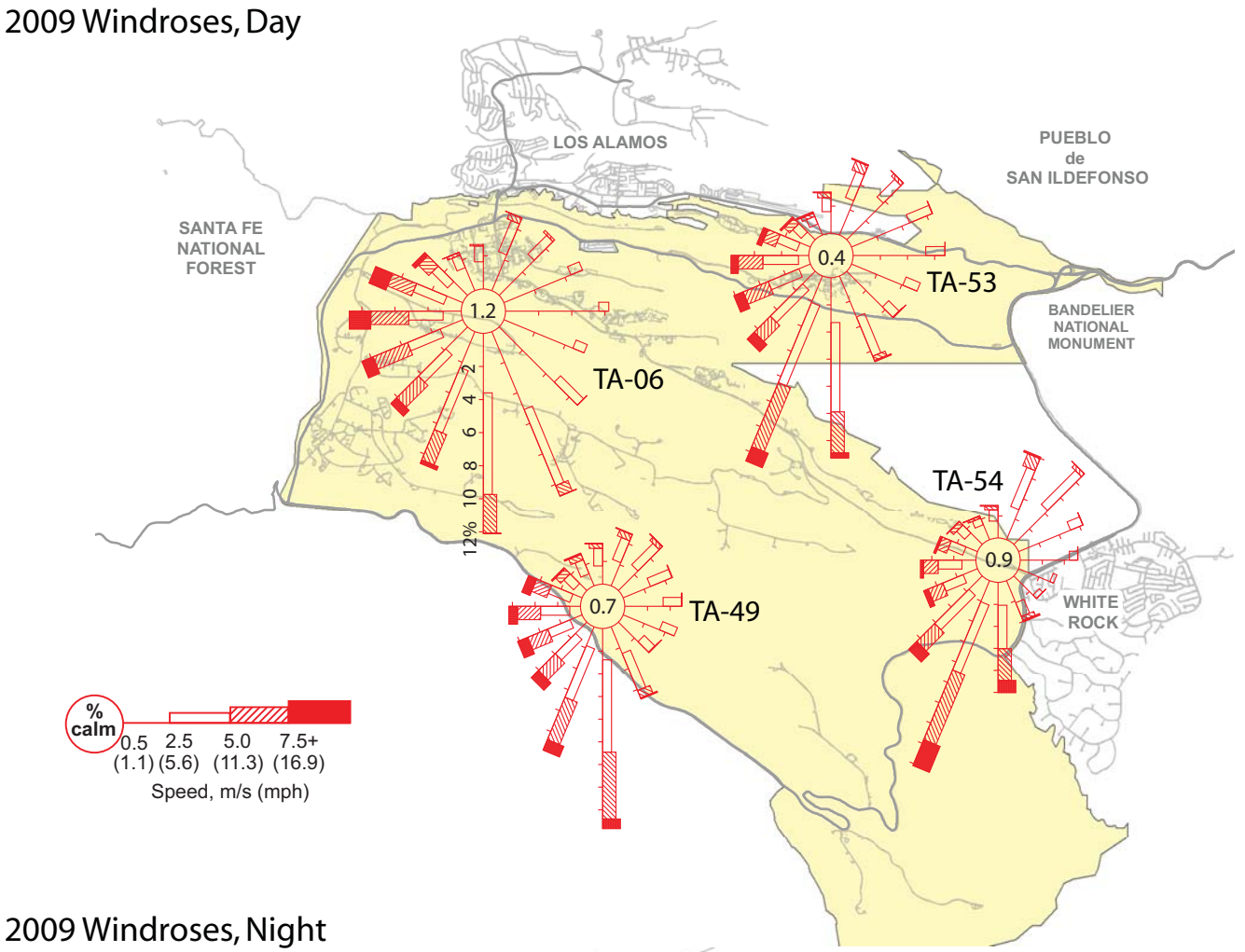

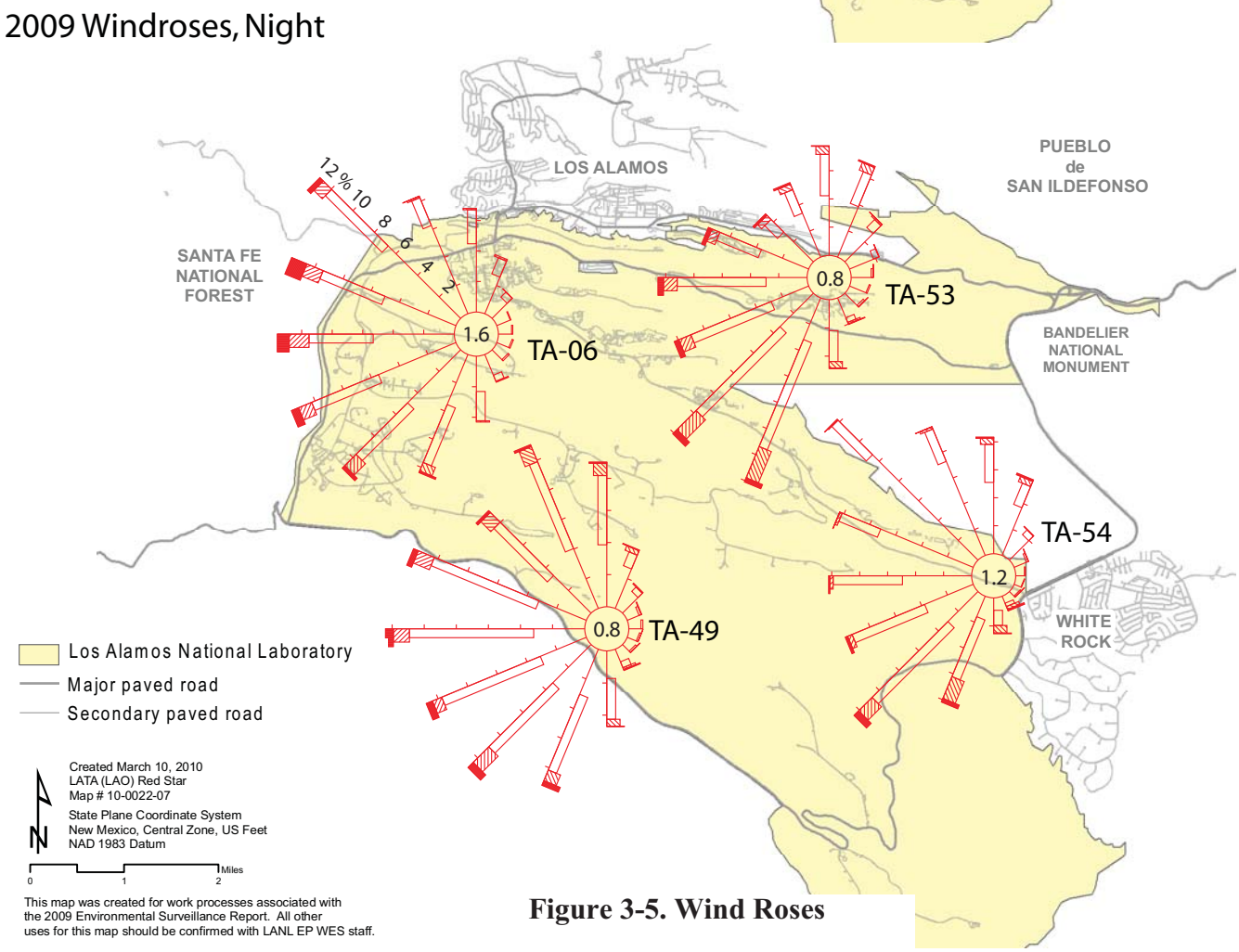

Figure 3-5. Wind Roses

Figure 3-6.
National Pollutant Discharge Elimination System (NPDES) Outfall Sites

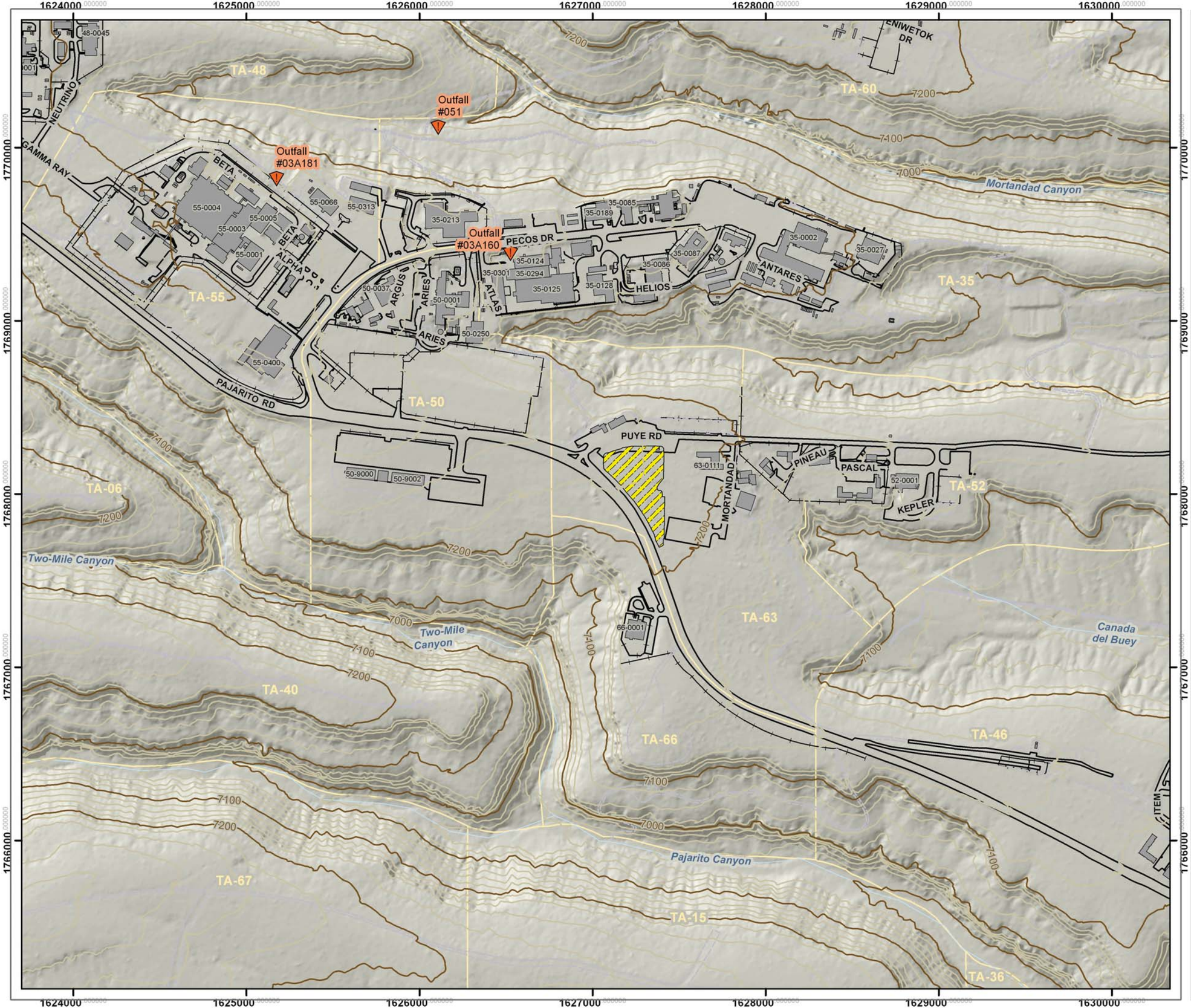

Legend

- NPDES Outfalls
- Drainages
- Contours, 100 ft
- Contours, 20 ft
- Roads, paved
- Roads, dirt
- Fences
- TWF Unit
- Buildings/structures
- Technical Area boundary

Kilometers
0.1 0.05 0 0.1 0.2

500 250 0 500 1000
Feet

New Mexico State Plane Coordinate System,
Central Zone, Units in Feet.
North American Datum 1983.

Reference Grid interval equals 1000 ft

DISCLAIMER: This map was created for work processes associated with LANL TA-63 TWF Permit Modification Request. All other uses for this map should be confirmed with LANL staff.

Map Produced by: WES-EDA-GIS Team, Kathryn Bennett.
Date: 03 August, 2011
Map Reference Number: 11-0055-09_TA63_NPDES_Outfalls.mxd

Los Alamos NATIONAL LABORATORY EST. 1943

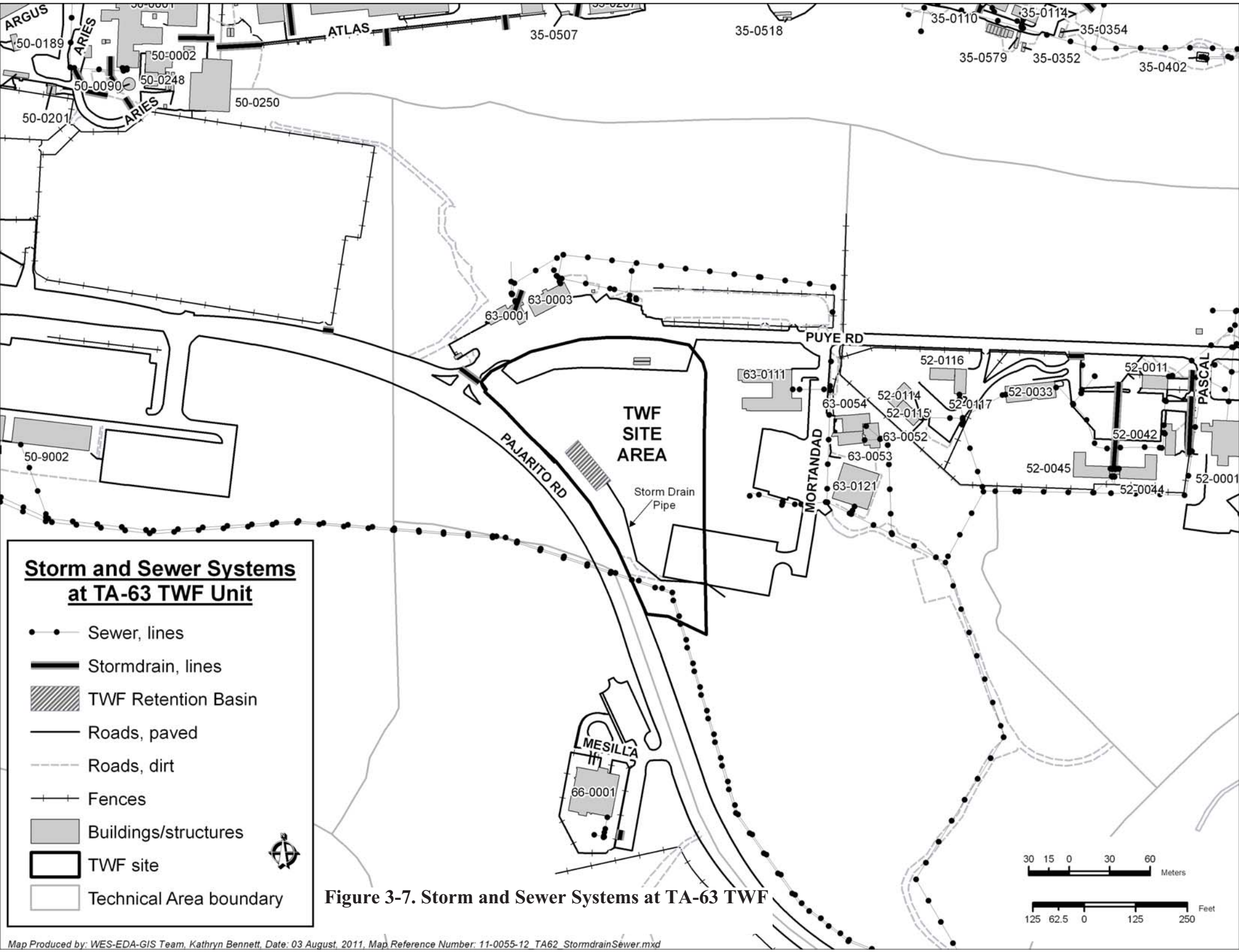

Figure 3-7. Storm and Sewer Systems at TA-63 TWF

Figure 3-8.
Natural Surface Drainage

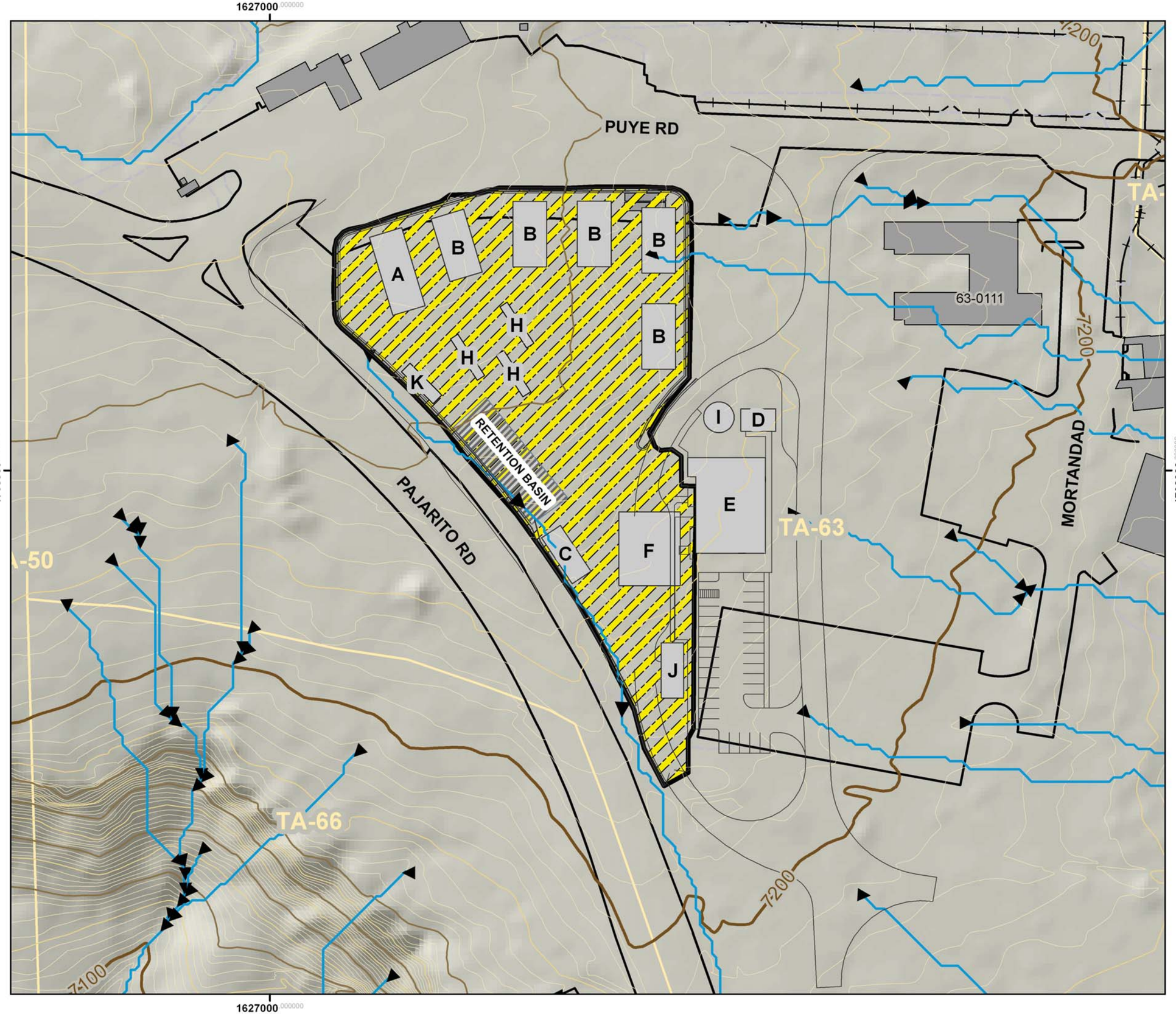

Legend

- TWF Roads, Parking and Retaining Wall
- Drainages
- Natural watercourse drainage (arrow indicates flow direction)
- Contours, 100 ft
- Contours, 20 ft
- Contours, 10 ft
- Contours, 2 ft
- Roads, paved (existing)
- Roads, dirt (existing)
- Fences, existing

TWF Building and Structures

- A. Storage and Characterization Building
- B.Waste Storage Buildings
- C. Forklift Charging Station
- D. Utility Building
- E. Operations Support Building
- F. Loading/Unloading Canopy
- Retention Basin
- H. Characterization and Certification Trailers
- I. Fire Suppresion Water Storage Tank
- J. Equipment Storage Building
- K. Calibration Source and Matrix Module Storage Building
- TWF Unit
- Buildings/structures
- Technical Area boundary

Meters: 20 10 0 20 40

Feet: 100 50 0 100

New Mexico State Plane Coordinate System,
Central Zone, Units in Feet.
North American Datum 1983.

Reference Grid interval equals 1000 ft

DISCLAIMER: This map was created for work processes associated with LANL TA-63 TWF Permit Modification Request. All other uses for this map should be confirmed with LANL staff.

Map Produced by: WES-EDA-GIS Team, Kathryn Bennett,
Date: 03 August, 2011
Map Reference Number: 11-0055-12_TA63_NaturalSurfaceDrainage.mxd

Los Alamos NATIONAL LABORATORY EST. 1943

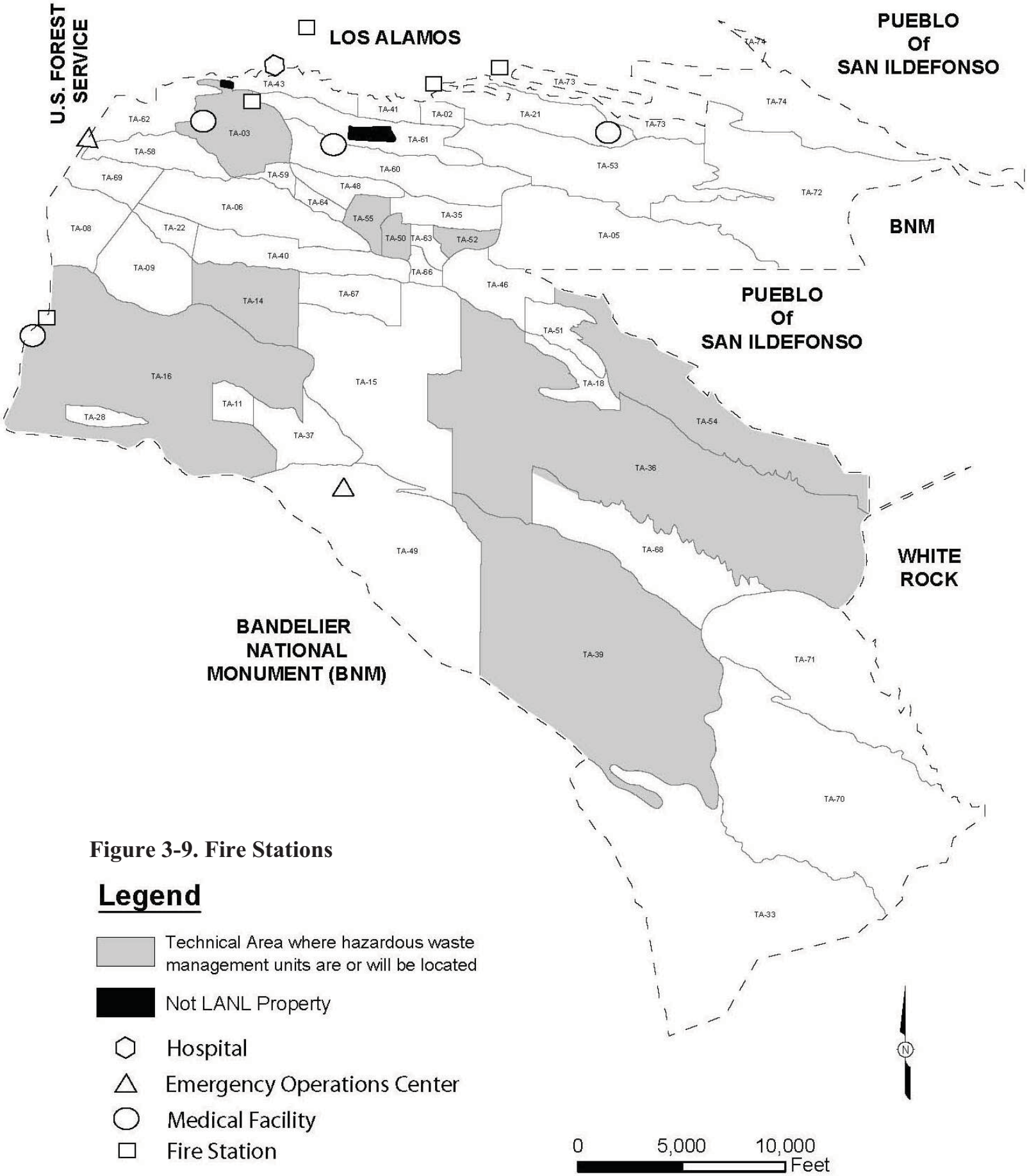

Figure 3-9. Fire Stations

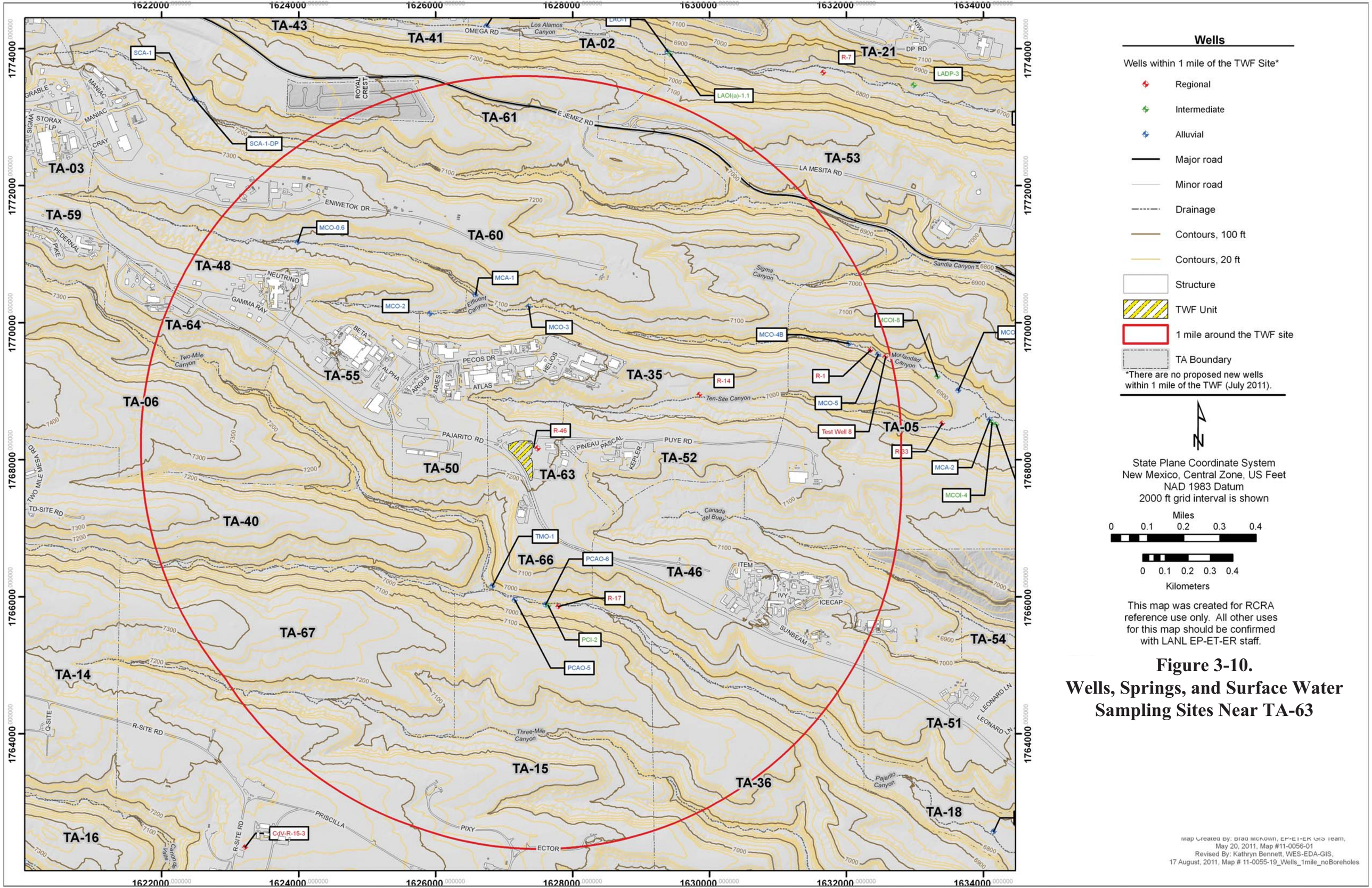

Figure 3-10.
Wells, Springs, and Surface Water Sampling Sites Near TA-63

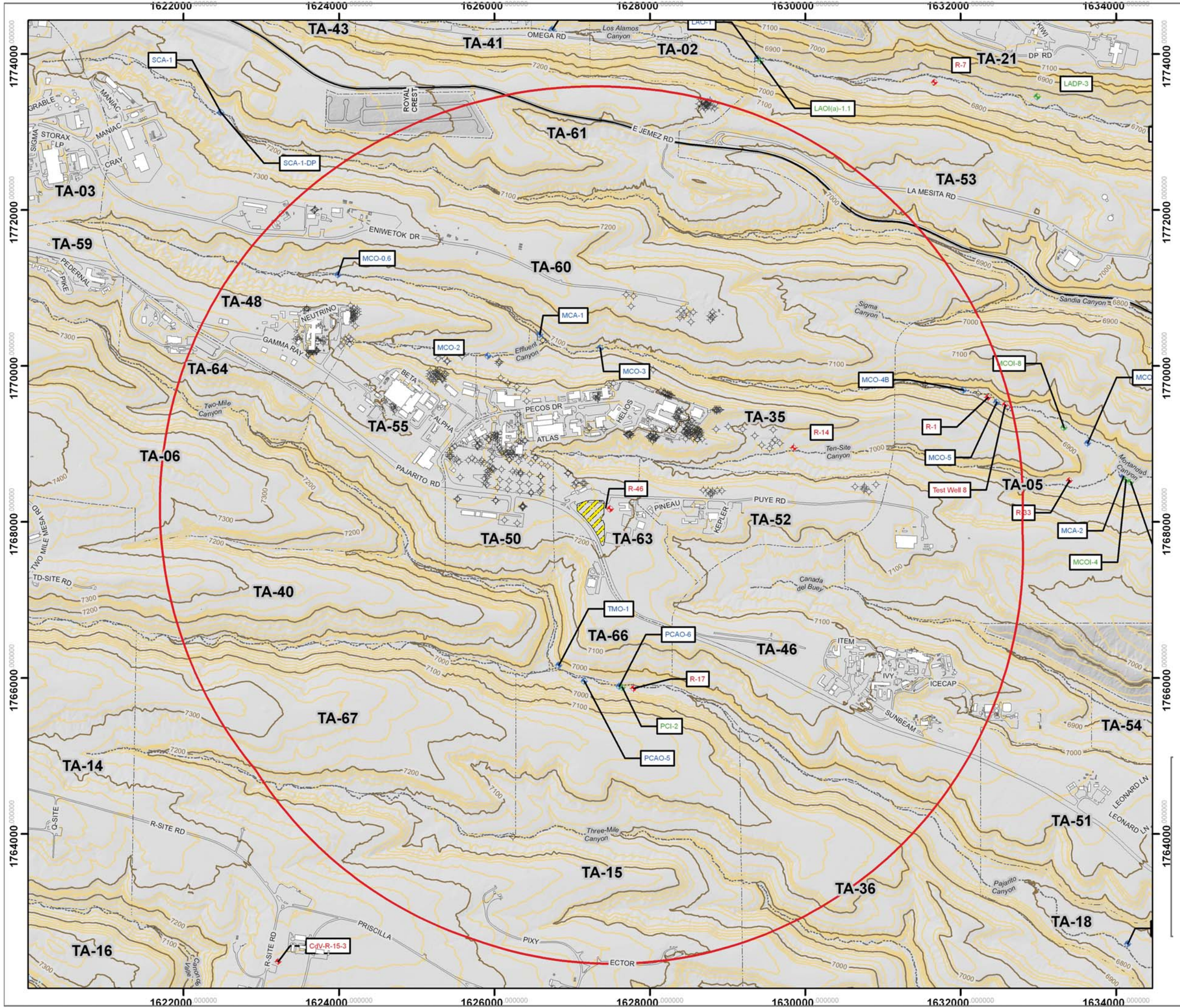

Wells and Boreholes

Wells within 1 mile of the TWF Site*

- Regional
- Intermediate
- Alluvial
- Bore Hole
- Major road
- Minor road
- Drainage
- Contours, 100 ft
- Contours, 20 ft
- Structure
- TWF Unit
- 1 mile around the TWF site
- TA Boundary

*There are no proposed new wells within 1 mile of the TWF (July 2011).

N

State Plane Coordinate System
New Mexico, Central Zone, US Feet
NAD 1983 Datum
2000 ft grid interval is shown

Miles: 0 0.1 0.2 0.3 0.4

Kilometers: 0 0.1 0.2 0.3 0.4

This map was created for RCRA reference use only. All other uses for this map should be confirmed with LANL EP-ET-ER staff.

Figure 3-11.
Wells and Boreholes within 3-mile Radius of TA-63

Map Created By: Brad McKown, EP-ET-ER GIS Team, May 20, 2011, Map #11-0056-01
Revised By: Kathryn Bennett, WES-EDA-GIS, 15 August, 2011, Map # 11-0055-19_Wells_1mile

4.0 CORRECTIVE ACTION

This section describes two Solid Waste Management Units (SWMUs) located in TA-63 at LANL. Information on the SWMUs at TA-63 is contained in LANL's *Solid Waste Management Units Report* (LANL, 1990), hereinafter referred to as the 1990 SWMU Report, and in the *RFI Work Plan for Operable Unit 1129* (LANL, 1992).

4.1 INTRODUCTION

The information in this section is being submitted in response to regulatory requirements in 40 CFR § 270.14(d). LANL uses the definition of a SWMU presented in the March 1, 2005 Compliance Order on Consent for LANL issued by NMED on March 1, 2005, hereinafter called the Consent Order. This definition states that SWMUs are "any discernible unit at which solid wastes have been placed at any time, and from which the Department determines there may be a risk of a release of hazardous waste or hazardous waste constituents, irrespective of whether the unit was intended for the management of solid or hazardous waste. Such units include any area at the Facility at which solid wastes have been routinely and systematically released; they do not include one-time spills."

4.2 SWMU DESCRIPTIONS

Descriptions of the SWMUs at TA-63 identified for corrective action in the Consent Order and Table K-1, *SWMUs and AOCs Requiring Corrective Action*, of the Permit are presented below. These descriptions were compiled from the *RFI Work Plan for Operable Unit 1129* (LANL, 1992) and from the 1990 SWMU Report. Brief unit and waste descriptions are also provided in Table 4-1.

4.2.1 TA-63 SWMUs

SWMUs at TA-63 include two inactive septic systems, neither of which is situated within the boundary of the TWF. Their locations are shown in Figure 4-1 of this permit modification request.

4.2.1.1 63-001(a)

SWMU 63-001(a) is an inactive 1000-gal. septic tank (structure 63-12, formerly designated as structure 52-49) and its associated seepage pit and drain line (formerly designated as structure 52-50). The seepage pit is 4 ft in diameter and 50 ft deep. This septic system formerly served Buildings 63-3, -4, -5, and -6. The septic system was removed from service in 1993 when the lines were connected to the TA-46 SWSC. Building 63-3 is a single-story concrete-block building that contains carpentry, welding, plumbing, and paint shops and two offices. Building 63-4 is a modular office building. Buildings 63-5 and -6 are trailers that are subdivided into offices.

Potential contaminants at SWMU 63-001(a) are solvents and other unspecified chemicals. No documentation of spills, releases, or incidents at TA-63 has been found.

Sampling was conducted at SWMU 63-001(a) in 1995. A total of 31 samples were collected from four locations and submitted for laboratory analysis of inorganic chemicals, organic chemicals, and radionuclides. Arsenic was detected below its background value (BV). Silver was detected slightly above its BV. Three inorganic chemicals with no established BVs were also detected. Nitrate (as NO3), nitrite (as NO2), and nitrogen dioxide were also detected. Cesium-134 was detected in one sample. There is no established BV for this radionuclide. Plutonium-238 and plutonium-239 were detected below their surface BVs. However, because these compounds were detected at depth these results are considered greater than background. Two organic chemicals with no established BVs, xylene and di-n-butyl pthalate, were detected.

In 2004, the ER Project sampled SWMU 63-001(a) to address additional data needs identified following 1995 RFI sampling activities. Sample analysis results will be used to evaluate risk at the aggregate scale and make recommendations for future actions. In addition, the data from the Middle Mortandad/Ten Site aggregate will be integrated with data from other aggregates within the Mortandad watershed to evaluate cumulative risk and determine final actions for the entire Mortandad watershed.

4.2.1.2 63-001(b)

SWMU 63-001(b) is an inactive 920-gal. septic tank (structure 63-14) and its associated seepage pit and drainlines. The seepage pit is 4 ft in diameter and 50 ft deep. Formerly, the tank and seepage pit were designated as structures 52-154 and structure 00-462, respectively. This septic system served Building 63-1 and received only sanitary wastewater. The septic system was removed from service in 1993 when the lines were connected to the TA-46 SWSC. Building 63-1 is a single-story building that houses offices, an electronics shop, and a machine shop. The building formerly was designated structure 00-155. Potential contaminants at SWMU 63-001(b) are solvents and other unspecified chemicals. No documentation of spills, releases, or incidents at TA-63 has been found.

In 1995, RFI samples were collected at SWMU 63-001(b). A total of 31 samples were collected from 4 locations and submitted for laboratory analysis of inorganic chemicals, organic chemicals, and radionuclides. Arsenic was detected below its BV. Five inorganic chemicals with no established BVs were detected below their respective screening levels: lithium, molybdenum, nitrate (as NO3), nitrite (as NO2), and strontium. Plutonium-238 was detected above its BV. Two organic chemicals, benzo(a)athracene and di-n-butylpthalate, were detected below their respective screening levels.

In 2004, the ER Project sampled SWMU 63-001(b) to address additional data needs identified following 1995 RFI sampling activities. Sample analysis results will be used to evaluate risk at the aggregate scale and make recommendations for future actions. In addition, the data from the Middle Mortandad/Ten Site aggregate will be integrated with data from other aggregates within the Mortandad watershed to evaluate cumulative risk and determine final actions for the entire Mortandad watershed.

4.2.1.3 Corrective Action

Pursuant to 40 CFR § 264.101(a), corrective action is required only for releases of hazardous waste or hazardous constituents. The SWMUs at TA-63 will be investigated and remediated, as

necessary and with NMED approval, during LANL Corrective Action Program under the Consent Order. Corrective action will generally follow the RCRA Facility Investigation/Corrective Measures Study process.

Table 4-1. Solid Waste Management Unit (SWMU) Descriptions[a]

SWMU No.	Unit Type	Unit Description	Waste Description
63-001(a)[b]	Septic System	Inactive site located in the Middle Mortandad/ Ten Site Canyons at TA-63	Sanitary and industrial wastewater
63-001(b)[b]	Septic System	Inactive site located in the Middle Mortandad/ Ten Site Canyons at TA-63	Sanitary wastewater

[a] Information compiled from: *Solid Waste Management Units Report* (LANL, 1990); *Module VIII: Special Conditions Pursuant to the 1984 Hazardous and Solid Waste Amendments to RCRA for Los Alamos National Laboratory, EPA I.D. NM0890010515* (EPA 1998); and *RFI Work Plan for Operable Unit 1129* (LANL, 1992).

[b] SWMU is identified in *Module VIII: Special Conditions Pursuant to the 1984 Hazardous and Solid W Amendments to RCRA for Los Alamos National Laboratory, EPA I.D. NM0890010515* (EPA, 1998) *LANL Hazardous Waste Facility Permit* (NMED, 2010).

Figure 4-1. Location of TA-63 SWMUs

Legend

- Drainages
- Contours, 100 ft
- Contours, 20 ft
- Roads, paved
- Roads, dirt
- Fences
- SWMU, 63-0001(a and b)
- Buildings/structures
- TWF unit
- TWF site
- Technical Area boundary

Kilometers
0.05 0.025 0 0.05 0.1

250 125 0 250 500
Feet

New Mexico State Plane Coordinate System,
Central Zone, Units in Feet.
North American Datum 1983.

Reference Grid interval equals 1000 ft

DISCLAIMER: This map was created for work processes associated with LANL TA-63 TWF Permit Modification Request. All other uses for this map should be confirmed with LANL staff.

Map Produced by: WES-EDA-GIS Team, Kathryn Bennett,
Date: 03 August, 2011
Map Reference Number: 11-0055-21_TA63_SWMU_disdir_sm.mxd

Los Alamos NATIONAL LABORATORY EST. 1943

5.0 CLOSURE PLAN

The closure plan describes the activities necessary to close the TA-63 TWF Unit. The information provided in the closure plan addresses the closure requirements specified in Permit Part 9, 40 CFR Part 264, Subparts G for hazardous waste management units operated at LANL under RCRA and the NMHWA.

The proposed closure plan for the TWF is included as Attachment F of this permit modification request. The plan is not included in its entirety as a potential revision to the Permit in Attachment G of this submittal to avoid duplication. The closure plan includes references to the requirements of Permit Part 9, *Closure*, and information regarding the procedures to meet them. It closely follows the format and content of the current closure plans included in Attachment G of the Permit. These includes descriptions of the closure performance standards, schedules, closure procedures (including waste equipment disposition, structure removal, decontamination and verification procedures), the sampling and analysis plan, waste management, and the closure certification report.

Until closure is complete and has been certified in accordance with Permit Section 9.5, *Closure Certification Report,* to the NMED, a copy of the approved closure plan or the Permit containing the plan, any approved revisions, and closure activity documentation associated with the closure will be on file with hazardous waste compliance personnel at LANL and at the DOE Los Alamos Site Office. Prior to closure of the TWF, this closure plan may be amended in accordance with Permit Section 9.4.8, as necessary and appropriate, to provide updated sampling and analysis plans and to incorporate updated decontamination technologies. Amended closure plans will be submitted to NMED for approval prior to implementing closure activities.

5.1 Closure Cost Estimate, Financial Assurance and Liability Requirements

LANL is a federal facility, owned by the DOE. In accordance with 40 CFR §264.140(c), LANL is exempt from the 40 CFR §264 Subpart H requirements to provide a cost estimate, financial assurance mechanisms, and liability insurance for closure actions. Therefore, these provisions are not included in the closure plan included as Attachment F of this permit modification request.

[This page has been left intentionally blank.]

6.0 REFERENCES

CCP, 2010. CCP-TP-093, *CCP Sampling of TRU Waste Container,* Waste Isolation Pilot Plant, Carlsbad, New Mexico, 2010.

DOE, 1995: *DOE Methods for Evaluating Environmental and Waste Management Samples*, DOE/EM-0089T, Revision 2., prepared for the U.S. Department of Energy by Pacific Northwest Laboratory, Richland, Washington.

DOE, 2010. *Transuranic Waste Acceptance Criteria for the Waste Isolation Pilot Plant*, DOE/WIPP-02-3122, Revision 7.0, US Department of Energy, Carlsbad Field Office, Carlsbad, NM.

EPA, 1998: *Module VIII: Special Conditions Pursuant to the 1984 Hazardous and Solid Waste Amendments to RCRA for Los Alamos National Laboratory, EPA I.D. NM0890010515*, effective date May 19, 1994, and December 23, 1998, U.S. Environmental Protection Agency, Region 6, Hazardous Waste Management Division, Dallas, Texas.

EPA, 1986 (and all approved updates): *Test Methods for Evaluating Solid Waste, Physical/Chemical Methods*, EPA-SW-846, U.S. Environmental Protection Agency, Office of Solid Waste and Emergency Response, U.S. Government Printing Office, Washington, D.C.

EPA, 1994: *Hazardous Waste Treatment, Storage, and Disposal Facilities (TSDF) – Background Information for Promulgated Organic Air Emission Standards for Tanks, Surface Impoundments and Containers,* EPA-453/R-94-076b, November 1994, U.S. Environmental Protection Agency, Office of Solid Waste and Emergency Response, U.S. Government Printing Office, Washington, D.C.

EPA, 2002. *RCRA Waste Sampling Draft Technical Guidance Planning, Implementation, and Assessment*, EPA530-D-02-002, August 2002, Office of Solid Waste, U.S. Environmental Protection Agency, Washington, DC.

LANL, 1990: *Solid Waste Management Units Report*, Revision 1.0, LAUR 90-3400, Los Alamos National Laboratory, Los Alamos, New Mexico.

LANL, 2003. *Los Alamos National Laboratory General Part A Permit Application*, Revision 6.0, Los Alamos National Laboratory, Los Alamos, New Mexico.

LANL, 2003. *Los Alamos National Laboratory General Part B Permit Application*, Revision 2.0, Los Alamos National Laboratory, Los Alamos, New Mexico.

LANL, 2006. *A Plan for the Management of the Cultural Heritage at Los Alamos National Laboratory, New Mexico*, Los Alamos National Laboratory, Los Alamos, New Mexico.

LANL, 2007, *Investigation Report for the Middle Mortandad/ Ten Site Aggregate, Revision 1,* LA-UR-07-4716 EP2007-0379, Los Alamos National Laboratory, Los Alamos, New Mexico.

LANL, 2008. CMRR Traffic Impact Analysis Study, Rev.0, 35554-009-08, Prepared for Los Alamos National Laboratory by Vigil Enterprises, Inc., September 30, 2088.

LANL, 2009/2010. *Water Level Data at LANL,* electronic database: Environment at LANL, Water Monitoring, Compliance, Risk Reduction, Los Alamos National Laboratory, Los Alamos, 2009/2010

LANL, 2011a. *TWF Storage Building Structural Design*, 11-001-SCAL-001, prepared for Los Alamos National Laboratory by Weidlinger-Navarro JV Northern, Los Alamos, New Mexico.

LANL, 2011b. Specification Section 09 9600 *Special Coatings, Master Document List for the TA-63 TRU Waste Facility Project Phase B Design 11-001-LIST-001*. Prepared for Los Alamos National Laboratory by Weidlinger-Navarro Northern New Mexico JV, 2011.

McLin, S.G., M.E. van Eeckhout, and A. Earles, 2001: *Mapping 100-Year Floodplain Boundaries Following the Cerro Grande Wildfire*, LA-UR-01-5218, Los Alamos National Laboratory, Los Alamos, New Mexico.

McLin, S. G., 1992: *Determination of 100-Year Floodplain Elevations at Los Alamos National Laboratory*, LA-12195-MS, Los Alamos National Laboratory, Los Alamos, New Mexico.

NFPA 13. *Standard for the Installation of Sprinkler Systems*, National Fire Protection Association, 2010 ed.

NFPA 72. *National Fire Alarm and Signaling Code*, National Fire Protection Association, 2010 ed.

NFPA 1144. *Standard for Reducing Structure Ignition Hazards from Wildland Fire*, National Fire Protection Association, Technical Committee on Forest and Rural Fire, 2008 ed.

NIOSH, 1994: *The National Institute for Occupational Health and Safety (NIOSH) Manual of Analytical Methods*, 4th ed. Issue 1. 1994.

NMED 2010: *Los Alamos National Laboratory Hazardous Waste Facility Permit*, New Mexico Environment Department, Santa Fe, New Mexico.

Nyhan, J. W., L. W. Hacker, T. E. Calhoun, and D. L. Young, 1978: *Soil Survey of Los Alamos County, New Mexico*, LA-6779-MS, Los Alamos National Laboratory, Los Alamos, New Mexico.

WRCC, 2011. Monthly Average Pan Evaporation (Inches), New Mexico, Western Regional Climate Center, Reno NV, available at: http://www.wrcc.dri.edu/htmlfiles/westevap.final.html#NEW%20MEXICO

7.0 CERTIFICATION

I certify under penalty of law that this document and all attachments were prepared under my direction or supervision in accordance with a system designed to assure that qualified personnel properly gather and evaluate the information submitted. Based on my inquiry of the person or persons who manage the system, or those persons directly responsible for gathering the information, the information submitted is, to the best of my knowledge and belief, true, accurate, and complete. I am aware that there are significant penalties for submitting false information, including the possibility of fine and imprisonment for knowing violations.

8/17/11

Dennis L. Hjeresen

Date Signed

Division Director
Environmental Protection Division
Los Alamos National Laboratory
Operator

8/18/2011

Kevin W. Smith

Date Signed

Manager, Los Alamos Site Office
National Nuclear Security Administration
U.S. Department of Energy
Owner/Operator

[This page has been left intentionally blank.]

Attachment A

Part A Form

OMB# 2050-0024; Expires 11/30/2011

SEND COMPLETED FORM TO: The Appropriate State or Regional Office.

United States Environmental Protection Agency
RCRA SUBTITLE C SITE IDENTIFICATION FORM

1. Reason for Submittal

MARK ALL BOX(ES) THAT APPLY

Reason for Submittal:

- ☐ To provide an Initial Notification (first time submitting site identification information / to obtain an EPA ID number for this location)
- ☐ To provide a Subsequent Notification (to update site identification information for this location)
- ☐ As a component of a First RCRA Hazardous Waste Part A Permit Application
- ☒ As a component of a Revised RCRA Hazardous Waste Part A Permit Application (Amendment # 7.2)
- ☐ As a component of the Hazardous Waste Report (If marked, see sub-bullet below)
  - ☐ Site was a TSD facility and/or generator of ≥1,000 kg of hazardous waste, >1 kg of acute hazardous waste, or >100 kg of acute hazardous waste spill cleanup in one or more months of the report year (or State equivalent LQG regulations)

2. Site EPA ID Number

EPA ID Number N M 0 8 9 0 0 1 0 5 1 5

3. Site Name

Name: Los Alamos National Laboratory

4. Site Location Information

Street Address: Bikini Atoll Road, SM-30

City, Town, or Village: Los Alamos **County:** Los Alamos

State: New Mexico **Country:** USA **Zip Code:** 87544

5. Site Land Type

☐ Private ☐ County ☐ District ☒ Federal ☐ Tribal ☐ Municipal ☐ State ☐ Other

6. NAICS Code(s) for the Site (at least 5-digit codes)

A.	9 2 8 1 1	**C.**	5 6 2 2 1
B.	5 4 1 7 1	**D.**	5 6 2 2 1 2

7. Site Mailing Address

Street or P.O. Box: 3747 West Jemez Road

City, Town, or Village: Los Alamos

State: New Mexico **Country:** USA **Zip Code:** 87545

8. Site Contact Person

First Name: Kevin **MI:** W **Last:** Smith

Title: Manager, Los Alamos Site Office, Department of Energy, National Nuclear Security Administration

Street or P.O. Box: PO Box 1663

City, Town or Village: Los Alamos

State: New Mexico **Country:** USA **Zip Code:** 87544

Email: ksmith2@doeal.gov

Phone: 505-667-5105 **Ext.:** **Fax:**

9. Legal Owner and Operator of the Site

A. Name of Site's Legal Owner: United States Department of Energy **Date Became Owner:** 01/01/1943

Owner Type: ☐ Private ☐ County ☐ District ☒ Federal ☐ Tribal ☐ Municipal ☐ State ☐ Other

Street or P.O. Box: 3747 West Jemez Road

City, Town, or Village: Los Alamos **Phone:** 505-667-6691

State: NM **Country:** USA **Zip Code:** 87544

B. Name of Site's Operator: Los Alamos National Security, LLC **Date Became Operator:** 06/01/2006

Operator Type: ☒ Private ☐ County ☐ District ☐ Federal ☐ Tribal ☐ Municipal ☐ State ☐ Other

10. Type of Regulated Waste Activity (at your site)
Mark "Yes" or "No" for all current activities (as of the date submitting the form); complete any additional boxes as instructed.

A. Hazardous Waste Activities; Complete all parts 1-7.

Y ☒ N ☐ **1. Generator of Hazardous Waste**
If "Yes", mark only one of the following – a, b, or c.

☒ a. LQG: Generates, in any calendar month, 1,000 kg/mo (2,200 lbs./mo.) or more of hazardous waste; **or** Generates, in any calendar month, or accumulates at any time, more than 1 kg/mo (2.2 lbs./mo) of acute hazardous waste; **or** Generates, in any calendar month, **or** accumulates at any time, more than 100 kg/mo (220 lbs./mo) of acute hazardous spill cleanup material.

☐ b. SQG: 100 to 1,000 kg/mo (220 – 2,200 lbs./mo) of non-acute hazardous waste.

☐ c. CESQG: Less than 100 kg/mo (220 lbs./mo) of non-acute hazardous waste.

If "Yes" above, indicate other generator activities.

Y ☐ N ☒ d. Short-Term Generator (generate from a short-term or one-time event and not from on-going processes). If "Yes", provide an explanation in the Comments section.

Y ☐ N ☒ e. United States Importer of Hazardous Waste

Y ☒ N ☐ f. Mixed Waste (hazardous and radioactive) Generator

Y ☒ N ☐ **2. Transporter of Hazardous Waste**
If "Yes", mark all that apply.

☒ a. Transporter

☐ b. Transfer Facility (at your site)

Y ☒ N ☐ **3. Treater, Storer, or Disposer of Hazardous Waste** Note: A hazardous waste permit is required for these activities.

Y ☐ N ☒ **4. Recycler of Hazardous Waste**

Y ☐ N ☒ **5. Exempt Boiler and/or Industrial Furnace**
If "Yes", mark all that apply.

☐ a. Small Quantity On-site Burner Exemption

☐ b. Smelting, Melting, and Refining Furnace Exemption

Y ☐ N ☒ **6. Underground Injection Control**

Y ☐ N ☒ **7. Receives Hazardous Waste from Off-site**

B. Universal Waste Activities; Complete all parts 1-2.

Y ☒ N ☐ **1. Large Quantity Handler of Universal Waste (you accumulate 5,000 kg or more) [refer to your State regulations to determine what is regulated]. Indicate types of universal waste managed at your site. If "Yes", mark all that apply.**

a. Batteries ☒
b. Pesticides ☒
c. Mercury containing equipment ☒
d. Lamps ☒
e. Other (specify) _____ ☐
f. Other (specify) _____ ☐
g. Other (specify) _____ ☐

Y ☐ N ☒ **2. Destination Facility for Universal Waste**
Note: A hazardous waste permit may be required for this activity.

C. Used Oil Activities; Complete all parts 1-4.

Y ☐ N ☒ **1. Used Oil Transporter**
If "Yes", mark all that apply.

☐ a. Transporter

☐ b. Transfer Facility (at your site)

Y ☐ N ☒ **2. Used Oil Processor and/or Re-refiner**
If "Yes", mark all that apply.

☐ a. Processor

☐ b. Re-refiner

Y ☐ N ☒ **3. Off-Specification Used Oil Burner**

Y ☐ N ☒ **4. Used Oil Fuel Marketer**
If "Yes", mark all that apply.

☐ a. Marketer Who Directs Shipment of Off-Specification Used Oil to Off-Specification Used Oil Burner

☐ b. Marketer Who First Claims the Used Oil Meets the Specifications

D. Eligible Academic Entities with Laboratories—Notification for opting into or withdrawing from managing laboratory hazardous wastes pursuant to 40 CFR Part 262 Subpart K

- You must check with your State to determine if you are eligible to manage laboratory hazardous wastes pursuant to 40 CFR Part 262 Subpart K

☐ 1. Opting into or currently operating under 40 CFR Part 262 Subpart K for the management of hazardous wastes in laboratories
See the item-by-item instructions for definitions of types of eligible academic entities. Mark all that apply:

☐ a. College or University

☐ b. Teaching Hospital that is owned by or has a formal written affiliation agreement with a college or university

☐ c. Non-profit Institute that is owned by or has a formal written affiliation agreement with a college or university

☐ 2. Withdrawing from 40 CFR Part 262 Subpart K for the management of hazardous wastes in laboratories

11. Description of Hazardous Waste

A. Waste Codes for Federally Regulated Hazardous Wastes. Please list the waste codes of the Federal hazardous wastes handled at your site. List them in the order they are presented in the regulations (e.g., D001, D003, F007, U112). Use an additional page if more spaces are needed.

See Attached						

B. Waste Codes for State-Regulated (i.e., non-Federal) Hazardous Wastes. Please list the waste codes of the State-Regulated hazardous wastes handled at your site. List them in the order they are presented in the regulations. Use an additional page if more spaces are needed.

12. Notification of Hazardous Secondary Material (HSM) Activity

Y ☐ N ☒ Are you notifying under 40 CFR 260.42 that you will begin managing, are managing, or will stop managing hazardous secondary material under 40 CFR 261.2(a)(2)(ii), 40 CFR 261.4(a)(23), (24), or (25)?

If "Yes", you must fill out the Addendum to the Site Identification Form: Notification for Managing Hazardous Secondary Material.

13. Comments

14. Certification. I certify under penalty of law that this document and all attachments were prepared under my direction or supervision in accordance with a system designed to assure that qualified personnel properly gather and evaluate the information submitted. Based on my inquiry of the person or persons who manage the system, or those persons directly responsible for gathering the information, the information submitted is, to the best of my knowledge and belief, true, accurate, and complete. I am aware that there are significant penalties for submitting false information, including the possibility of fines and imprisonment for knowing violations. For the RCRA Hazardous Waste Part A Permit Application, all owner(s) and operator(s) must sign (see 40 CFR 270.10(b) and 270.11).

Signature of legal owner, operator, or an authorized representative	Name and Official Title (type or print)	Date Signed (mm/dd/yyyy)
Dennis Hjeresen for	James C. Cantwell, ADESH&Q, LANS	8/17/11
Kevin Smith	Kevin Smith, DOE/LASO Manager	8/18/2011

11. Description of Hazardous Wastes

A. Waste Codes for Federally Regulated Hazardous Wastes.

D001	D002	D003	D004	D005	D006	D007
D008	D009	D010	D011	D012	D013	D014
D015	D016	D017	D018	D019	D020	D021
D022	D023	D024	D025	D026	D027	D028
D029	D030	D031	D032	D033	D034	D035
D036	D037	D038	D039	D040	D041	D042
D043	F001	F002	F003	F004	F005	F006
F007	F008	F009	F010	F011	F012	F019
F020	F021	F022	F023	F024	F025	F026
F027	F028	F032	F034	F035	F037	F038
F039	K044	K045	K046	K047	K084	K101
K102	P001	P002	P003	P004	P005	P006
P007	P008	P009	P010	P011	P012	P013
P014	P015	P016	P017	P018	P020	P021
P022	P023	P024	P026	P027	P028	P029
P030	P031	P033	P034	P036	P037	P038
P039	P040	P041	P042	P043	P044	P045
P046	P047	P048	P049	P050	P051	P054
P056	P057	P058	P059	P060	P062	P063
P064	P065	P066	P067	P068	P069	P070
P071	P072	P073	P074	P075	P076	P077
P078	P081	P082	P084	P085	P087	P088
P089	P092	P093	P094	P095	P096	P097
P098	P099	P101	P102	P103	P104	P105
P106	P108	P109	P110	P111	P112	P113
P114	P115	P116	P118	P119	P120	P121
P122	P123	P127	P128	P185	P188	P189
P190	P191	P192	P194	P196	P197	P198
P199	P201	P202	P203	P204	P205	U001
U002	U003	U004	U005	U006	U007	U008
U009	U010	U011	U012	U014	U015	U016
U017	U018	U019	U020	U021	U022	U023
U024	U025	U026	U027	U028	U029	U030
U031	U032	U033	U034	U035	U036	U037
U038	U039	U041	U042	U043	U044	U045
U046	U047	U048	U049	U050	U051	U052
U053	U055	U056	U057	U058	U059	U060
U061	U062	U063	U064	U066	U067	U068
U069	U070	U071	U072	U073	U074	U075

11. Description of Hazardous Wastes
A. Waste Codes for Federally Regulated Hazardous Wastes. (Continued)

U076	U077	U078	U079	U080	U081	U082
U083	U084	U085	U086	U087	U088	U089
U090	U091	U092	U093	U094	U095	U096
U097	U098	U099	U101	U102	U103	U105
U106	U107	U108	U109	U110	U111	U112
U113	U114	U115	U116	U117	U118	U119
U120	U121	U122	U123	U124	U125	U126
U127	U128	U129	U130	U131	U132	U133
U134	U135	U136	U137	U138	U140	U141
U142	U143	U144	U145	U146	U147	U148
U149	U150	U151	U152	U153	U154	U155
U156	U157	U158	U159	U160	U161	U162
U163	U164	U165	U166	U167	U168	U169
U170	U171	U172	U173	U174	U176	U177
U178	U179	U180	U181	U182	U183	U184
U185	U186	U187	U188	U189	U190	U191
U192	U193	U194	U196	U197	U200	U201
U202	U203	U204	U205	U206	U207	U208
U209	U210	U211	U213	U214	U215	U216
U217	U218	U219	U220	U221	U222	U223
U225	U226	U227	U228	U234	U235	U236
U237	U238	U239	U240	U243	U244	U246
U247	U248	U249	U271	U278	U279	U280
U328	U353	U359	U364	U367	U372	U373
U387	U389	U394	U395	U404	U409	U410
U411						

United States Environmental Protection Agency

HAZARDOUS WASTE PERMIT INFORMATION FORM

1. Facility Permit Contact	**First Name:** Kevin	**MI:** W	**Last Name:** Smith
	Contact Title: Los Alamos Site Office Manager		
	Phone Number: 505-667-5105	**Ext.:**	**Email:** ksmith2@doeal.gov
2. Facility Permit Contact Mailing Address	**Street or P. O. Box:** 3747 West Jemez Road		
	City, Town, or Village: Los Alamos		
	State: NM		
	Country: USA		**Zip Code:** 87544
3. Operator Mailing Address and Telephone Number	**Street or P. O. Box:** P.O. Box 1663		
	City, Town, or Village: Los Alamos		
	State: NM		
	Country: USA	**Zip Code:** 87545	**Phone Number:** 505-667-4218
4. Facility Existence Date	**Facility Existence Date (mm/dd/yyyy):** 01/01/1943		

5. Other Environmental Permits

A. Facility Type *(Enter code)*	**B. Permit Number**	**C. Description**
See attached		

6. Nature of Business: LANLs central mission is the reduction of global nuclear danger supported by research that also contributes to conventional defense, civilian, and industrial needs. This includes programs in nuclear,medium energy, and space physics; hydrodynamics; conventional explosives; chemistry; metallurgy;radiochemistry; space nuclear systems; controlled thermonuclear fusion; laser research; environmental technology; geothermal, solar, and fossil energy research; nuclear safeguards; biomedicine; health and biotechnology; and industrial partnerships.

5. Other Environmental Permits

A. Facility Type	B. Permit Number	C. Description
National Pollutant Discharge Elimination System (NPDES):		
NPDES Construction General Permit:		Construction Project Title
N	NMLEWG855	Los Alamos National Laboratory
N	NMR15FG67	Regional Wells Project
N	NMR15EZ86	TA-50 Pumphouse
N	NMR15EZ89	TA-55 Construction
N	NMR15FB75	Ski Hill Bypass Road
N	NMR15EZ87	TA-50 RLWTF
N	NMR15EZ75	DX Strategic Plan
N	NMR15EZ85	TA-33 Construction Activities
N	NMR15EZ98	Deactivation and Decommission
Industrial Point Source Permit:		
N	NMR05GB21	Industrial point source discharges
NPDES Storm Water Multi-Sector General Permit (MSGP) for Industrial Activities:		
N	NMR05GB21	Los Alamos National Security, LLC
N	NMR05GK10	U.S. Department of Energy
Dredge and Fill Permits with the U.S. Army Corps of Engineers:		
	N/A	
Resource Conservation and Recovery Act (RCRA):		
R	NM0890010515-1	RCRA Hazardous Waste Facility Operating Permit
Groundwater Discharge Plans (GDP):		
E	DP-857	TA-46, SWWS Plant, Approved July 1992
E	DP-1132	TA-50, Radioactive Liquid Waste Treatment Facility (New Mexico Environment Department [NMED] approval pending)
E	DP-1589	Domestic Wastewater Septic Systems, Groundwater Discharge Permit Application, April 2006 (NMED approval pending)
1.0 Air Quality Permits:		
E	P100 R1	Air Quality Operating Permit (20.2.70 NMAC) LANL Air Emissions
E	2195	Air Quality (20.2.72 NMAC) Portable Rock Crusher
E	2195B-M1-R2	Air Quality (20.2.72 NMAC) TA-3 Steam Plant – Flue Gas Recirculation
E	2195F-R3	Air Quality (20.2.72 NMAC) TA-33 Generator
E	GCP3-2195-G-R1	Air Quality (20.2.72 NMAC) TA-60 Asphalt Plant
E	2195-H	Air Quality (20.2.72 NMAC) Data disintegrator
E	#634-M-2 #632 #1081-M-1-R7	Air Quality (National Emission Standards for Hazardous Air Pollutants) Beryllium Machining: TA-3-141 TA-35-213 TA-55-4
E	2195-N	Air Quality (20.2.72 NMAC) Chemistry and Metallurgy Research Replacement Facility
E	NSR 2195-P	TA-33 1-225 kW/2-20 kW Diesel Generators
Septic Tank Permits:		
E	LA-12	TA-69-10, Seepage Pit
E	LA-13	TA-11-43, Leach Field
Septic Tank Permits (Continued):		

E	LA-21	TA-15-205, Leach Field
E	LA-24	TA-16-371, Holding Tank
E	LA-32	TA-33-31, Seepage Pit
E	LA-34	TA-33-87 Leach Field
E	LA-38	TA-16-175, Leach Field, tank replaced with new tanks 1194 & 1195
E	LA-39	TA-16-210, Leach Field
E	LA-44	TA-39-104, Evaporation Bed, replaced with TA-33-161
E	LA-45	TA-40-24, Leach Field
E	LA-46	TA-40-11 Leach Field
E	LA-49	TA-49-113, Evapotranspiration Bed
E	LA-50	TA-49-115, Evapotranspiration Bed
E	LA-59	TA-52-99, Seepage Pit
E	SF880258	TA-66-0001, Seepage Pit
E	SF890024	TA-39-111, Leach Field
E	SF890025	TA-72-8,39 Leach Field
E	SF89032R	TA-33-178, Leach Field
E	ES030243	TA-36-78, Leach Field
E	SF890589	TA-25-312, Leach Field
E	Unknown	TA-39-89, Leach Field
E	Unknown	TA-58-0049, Leach Field

7. Process Codes and Design Capacities - Enter information in the Sections on Form Page 3

A. PROCESS CODE - Enter the code from the list of process codes below that best describes each process to be used at the facility. If more lines are needed, attach a separate sheet of paper with the additional information. For "other" processes (i.e., D99, S99, T04, and X99), describe the process (including its design capacity) in the space provided in Item 8.

B. PROCESS DESIGN CAPACITY- For each code entered in Item 7.A; enter the capacity of the process.

1. AMOUNT - Enter the amount. In a case where design capacity is not applicable (such as in a closure/post-closure or enforcement action) enter the total amount of waste for that process.

2. UNIT OF MEASURE - For each amount entered in Item 7.B(1), enter the code in Item 7.B(2) from the list of unit of measure codes below that describes the unit of measure used. Select only from the units of measure in this list.

C. PROCESS TOTAL NUMBER OF UNITS - Enter the total number of units for each corresponding process code.

Process Code	Process	Appropriate Unit of Measure for Process Design Capacity
	Disposal	
D79	Underground Injection Well Disposal	Gallons; Liters; Gallons Per Day; or Liters Per Day
D80	Landfill	Acre-feet; Hectares-meter; Acres; Cubic Meters; Hectares; Cubic Yards
D81	Land Treatment	Acres or Hectares
D82	Ocean Disposal	Gallons Per Day or Liters Per Day
D83	Surface Impoundment Disposal	Gallons; Liters; Cubic Meters; or Cubic Yards
D99	Other Disposal	Any Unit of Measure Listed Below
	Storage	
S01	Container	Gallons; Liters; Cubic Meters; or Cubic Yards
S02	Tank Storage	Gallons; Liters; Cubic Meters; or Cubic Yards
S03	Waste Pile	Cubic Yards or Cubic Meters
S04	Surface Impoundment	Gallons; Liters; Cubic Meters; or Cubic Yards
S05	Drip Pad	Gallons; Liters; Cubic Meters; Hectares; or Cubic Yards
S06	Containment Building Storage	Cubic Yards or Cubic Meters
S99	Other Storage	Any Unit of Measure Listed Below
	Treatment	
T01	Tank Treatment	Gallons Per Day; Liters Per Day
T02	Surface Impoundment	Gallons Per Day; Liters Per Day
T03	Incinerator	Short Tons Per Hour; Metric Tons Per Hour; Gallons Per Hour; Liters Per Hour; BTUs Per Hour; Pounds Per Hour; Short Tons Per Day; Kilograms Per Hour; Gallons Per Day; Metric Tons Per Hour; or Million BTU Per Hour
T04	Other Treatment	Gallons Per Day; Liters Per Day; Pounds Per Hour; Short Tons Per Hour; Kilograms Per Hour; Metric Tons Per Day; Short Tons Per Day; BTUs Per Hour; Gallons Per Day; Liters Per Hour; or Million BTU Per Hour
T80	Boiler	Gallons; Liters; Gallons Per Hour; Liters Per Hour; BTUs Per Hour; or Million BTU Per Hour

Process Code	Process	Appropriate Unit of Measure for Process Design Capacity
	Treatment (Continued)	**(for T81 –T94)**
T81	Cement Kiln	Gallons Per Day; Liters Per Day; Pounds Per Hour; Short Tons Per Hour; Kilograms Per Hour; Metric Tons Per Day; Metric Tons Per Hour; Short Tons Per Day; BTU Per Hour; Liters Per Hour; Kilograms Per Hour; or Million BTU Per Hour
T82	Lime Kiln	
T83	Aggregate Kiln	
T84	Phosphate Kiln	
T85	Coke Oven	
T86	Blast Furnace	
T87	Smelting, Melting, or Refining Furnace	
T88	Titanium Dioxide Chloride Oxidation Reactor	
T89	Methane Reforming Furnace	
T90	Pulping Liquor Recovery Furnace	
T91	Combustion Device Used in the Recovery of Sulfur Values from Spent Sulfuric Acid	
T92	Halogen Acid Furnaces	
T93	Other Industrial Furnaces Listed in 40 CFR 260.10	
T94	Containment Building Treatment	Cubic Yards; Cubic Meters; Short Tons Per Hour; Gallons Per Hour; Liters Per Hour; Btu Per Hour; Pounds Per Hour; Short Tons Per Day; Kilograms Per Hour; Metric Tons Per Day; Gallons Per Day; Liters Per Day, Metric Tons Per Hour, or Million Btu Per Hour
	Miscellaneous (Subpart X)	
X01	Open Burning/Open Detonation	Any Unit of Measure Listed Below
X02	Mechanical Processing	Short Tons Per Hour; Metric Tons Per Hour; Short Tons Per Day; Metric Tons Per Day; Pounds Per Hour; Kilograms Per Hour; Gallons Per Hour; Liters Per Hour; or Gallons Per Day
X03	Thermal Unit	Gallons Per Day; Liters Per Day; Pounds Per Hour; Short Tons Per Hour; Kilograms Per Hour; Metric Tons Per Day; Metric Tons Per Hour; Short Tons Per Day; BTU Per Hour; or Million BTU Per Hour
X04	Geologic Repository	Cubic Yards; Cubic Meters; Acre-feet; Hectare-meter; Gallons; or Liters
X99	Other Subpart X	Any Unit Measure Listed Below

Unit of Measure	Unit of Measure Code
Gallons	G
Gallons Per Hour	E
Gallons Per Day	U
Liters	L
Liters Per Hour	H
Liters Per Day	V
Short Tons Per Hour	D
Metric Tons Per Hour	W
Short Tons Per Day	N
Metric Tons Per Day	S
Pounds Per Hour	J
Kilograms Per Hour	R
Million Btu Per Hour	X
Cubic Yards	Y
Cubic Meters	C
Acres	B
Acre-feet	A
Hectares	Q
Hectare-meter	F
Btu Per Hour	I

7. Process Codes and Design Capacities (Continued)

EXAMPLE FOR COMPLETING Item 7 (shown in line number X-1 below): A facility has a storage tank, which can hold 533,788 gallons.

Line Number		A. Process Code (From list above)			B. PROCESS DESIGN CAPACITY (1) Amount (Specify)	B. PROCESS DESIGN CAPACITY (2) Unit of Measure	C. Process Total Number of Units	For Official Use Only					
X	**1**	**S**	**0**	**2**	**533.788**	**G**	**001**						
Technical Area 3													
	1	S	0	1	18,500	G	001						
	2												
	3												
	4												
	5												
	6												
	7												
	8												
	9												
1	**0**												
1	**1**												
1	**2**												
1	**3**												

NOTE: If you need to list more than 13 process codes, attach an additional sheet(s) with the information in the same format as above. Number the lines sequentially, taking into account any lines that will be used for "other" processes (i.e., D99, S99, T04 and X99) in Item 8.

8. Other Processes (Follow instructions from Item 7 for D99, S99, T04 and X99 process codes)

Line Number (Enter #s in sequence with Item 7)		A. Process Code (From list above)			B. PROCESS DESIGN CAPACITY (1) Amount (Specify)	B. PROCESS DESIGN CAPACITY (2) Unit of Measure	C. Process Total Number of Units	For Official Use Only					
X	**2**	**T**	**0**	**4**	**100.00**	**U**	**001**						

7. Process Codes and Design Capacities (Continued)

EXAMPLE FOR COMPLETING Item 7 (shown in line number X-1 below): A facility has a storage tank, which can hold 533,788 gallons.

Line Number		A. Process Code (From list above)			B. PROCESS DESIGN CAPACITY (1) Amount (Specify)	B. PROCESS DESIGN CAPACITY (2) Unit of Measure	C. Process Total Number of Units	For Official Use Only					
X	**1**	**S**	**0**	**2**	**533.788**	**G**	**001**						
Technical Area 14													
	1	X	0	1	1,000 50/20	See Lines 2 & 3	002						
	2				Pounds per detonation Gallons per burn/pounds per burn								
	3				Units identified as TA-14-23 is to be closed in accordance with the Code of Federal Regulations (CFR), Title 40, Part 265, Subpart G. Permitted status is not requested.								
	4												
	5												
	6												
	7												
	8												
	9												
1	**0**												
1	**1**												
1	**2**												
1	**3**												

NOTE: If you need to list more than 13 process codes, attach an additional sheet(s) with the information in the same format as above. Number the lines sequentially, taking into account any lines that will be used for "other" processes (i.e., D99, S99, T04 and X99) in Item 8.

8. Other Processes (Follow instructions from Item 7 for D99, S99, T04 and X99 process codes)

Line Number (Enter #s in sequence with Item 7)		A. Process Code (From list above)			B. PROCESS DESIGN CAPACITY (1) Amount (Specify)	B. PROCESS DESIGN CAPACITY (2) Unit of Measure	C. Process Total Number of Units	For Official Use Only					
X	**2**	**T**	**0**	**4**	**100.00**	**U**	**001**						

7. Process Codes and Design Capacities (Continued)

EXAMPLE FOR COMPLETING Item 7 (shown in line number X-1 below): A facility has a storage tank, which can hold 533,788 gallons.

Line Number		A. Process Code (From list above)			B. PROCESS DESIGN CAPACITY (1) Amount (Specify)	B. PROCESS DESIGN CAPACITY (2) Unit of Measure	C. Process Total Number of Units	For Official Use Only					
X	**1**	**S**	**0**	**2**	**533.788**	**G**	**001**						
Technical Area 16													
	1	X	0	1	1,000 50/1,000	See Line 2	002						
	2				Pounds per burn Gallons per burn/pounds per burn								
	3												
	4												
	5												
	6												
	7												
	8												
	9												
1	**0**												
1	**1**												
1	**2**												
1	**3**												

NOTE: If you need to list more than 13 process codes, attach an additional sheet(s) with the information in the same format as above. Number the lines sequentially, taking into account any lines that will be used for "other" processes (i.e., D99, S99, T04 and X99) in Item 8.

8. Other Processes (Follow instructions from Item 7 for D99, S99, T04 and X99 process codes)

Line Number (Enter #s in sequence with Item 7)		A. Process Code (From list above)			B. PROCESS DESIGN CAPACITY (1) Amount (Specify)	B. PROCESS DESIGN CAPACITY (2) Unit of Measure	C. Process Total Number of Units	For Official Use Only					
X	**2**	**T**	**0**	**4**	**100.00**	**U**	**001**						

7. Process Codes and Design Capacities (Continued)

EXAMPLE FOR COMPLETING Item 7 (shown in line number X-1 below): A facility has a storage tank, which can hold 533,788 gallons.

Line Number		A. Process Code (From list above)			B. PROCESS DESIGN CAPACITY (1) Amount (Specify)	B. PROCESS DESIGN CAPACITY (2) Unit of Measure	C. Process Total Number of Units	For Official Use Only					
X	**1**	**S**	**0**	**2**	**533.788**	**G**	**001**						
Technical Area 36													
	1	X	0	1	2,000	See line 2	001						
	2				Pounds per detonation								
	3												
	4												
	5												
	6												
	7												
	8												
	9												
1	**0**												
1	**1**												
1	**2**												
1	**3**												

NOTE: If you need to list more than 13 process codes, attach an additional sheet(s) with the information in the same format as above. Number the lines sequentially, taking into account any lines that will be used for "other" processes (i.e., D99, S99, T04 and X99) in Item 8.

8. Other Processes (Follow instructions from Item 7 for D99, S99, T04 and X99 process codes)

Line Number (Enter #s in sequence with Item 7)		A. Process Code (From list above)			B. PROCESS DESIGN CAPACITY (1) Amount (Specify)	B. PROCESS DESIGN CAPACITY (2) Unit of Measure	C. Process Total Number of Units	For Official Use Only					
X	**2**	**T**	**0**	**4**	**100.00**	**U**	**001**						

7. Process Codes and Design Capacities (Continued)

EXAMPLE FOR COMPLETING Item 7 (shown in line number X-1 below): A facility has a storage tank, which can hold 533,788 gallons.

Line Number		A. Process Code (From list above)			B. PROCESS DESIGN CAPACITY (1) Amount (Specify)	B. PROCESS DESIGN CAPACITY (2) Unit of Measure	C. Process Total Number of Units	For Official Use Only					
X	**1**	**S**	**0**	**2**	**533.788**	**G**	**001**						
Technical Area 39													
	1	X	0	1	1,000	See Lines 2 and 3	002						
	2				1,000 pounds per detonation								
	3				One unit identified as TA-39-57 is to be closed in accordance with Code of Federal Regualtions (CFR), Title 40, Part 265, Subpart G. Permitted status is not requested.								
	4												
	5												
	6												
	7												
	8												
	9												
1	**0**												
1	**1**												
1	**2**												
1	**3**												

NOTE: If you need to list more than 13 process codes, attach an additional sheet(s) with the information in the same format as above. Number the lines sequentially, taking into account any lines that will be used for "other" processes (i.e., D99, S99, T04 and X99) in Item 8.

8. Other Processes (Follow instructions from Item 7 for D99, S99, T04 and X99 process codes)

Line Number (Enter #s in sequence with Item 7)		A. Process Code (From list above)			B. PROCESS DESIGN CAPACITY (1) Amount (Specify)	B. PROCESS DESIGN CAPACITY (2) Unit of Measure	C. Process Total Number of Units	For Official Use Only					
X	**2**	**T**	**0**	**4**	**100.00**	**U**	**001**						

7. Process Codes and Design Capacities (Continued)

EXAMPLE FOR COMPLETING Item 7 (shown in line number X-1 below): A facility has a storage tank, which can hold 533,788 gallons.

Line Number		A. Process Code (From list above)			B. PROCESS DESIGN CAPACITY (1) Amount (Specify)	B. PROCESS DESIGN CAPACITY (2) Unit of Measure	C. Process Total Number of Units	For Official Use Only					
X	**1**	**S**	**0**	**2**	**533.788**	**G**	**001**						
Technical Area 50													
	1	S	0	1	31,500	G	002						
	2												
	3												
	4												
	5												
	6												
	7												
	8												
	9												
1	**0**												
1	**1**												
1	**2**												
1	**3**												

NOTE: If you need to list more than 13 process codes, attach an additional sheet(s) with the information in the same format as above. Number the lines sequentially, taking into account any lines that will be used for "other" processes (i.e., D99, S99, T04 and X99) in Item 8.

8. Other Processes (Follow instructions from Item 7 for D99, S99, T04 and X99 process codes)

Line Number (Enter #s in sequence with Item 7)		A. Process Code (From list above)			B. PROCESS DESIGN CAPACITY (1) Amount (Specify)	B. PROCESS DESIGN CAPACITY (2) Unit of Measure	C. Process Total Number of Units	For Official Use Only					
X	**2**	**T**	**0**	**4**	**100.00**	**U**	**001**						

7. Process Codes and Design Capacities (Continued)

EXAMPLE FOR COMPLETING Item 7 (shown in line number X-1 below): A facility has a storage tank, which can hold 533,788 gallons.

Line Number		A. Process Code (From list above)			B. PROCESS DESIGN CAPACITY (1) Amount (Specify)	B. PROCESS DESIGN CAPACITY (2) Unit of Measure	C. Process Total Number of Units	For Official Use Only					
X	**1**	**S**	**0**	**2**	**533.788**	**G**	**001**						
Technical Area 54, Area L													
	1	S	0	1	407,880	G	001						
	2	D	8	0	1,200	See Line 3	001						
	3				To be closed in accordance with Code of Federal Regulations (CFR), Tilte 40, Part 265, Subpart G. Permitted status is not requested. The unit of measure for capacity is cubic yards.								
	4												
	5												
	6												
	7												
	8												
	9												
1	**0**												
1	**1**												
1	**2**												
1	**3**												

NOTE: If you need to list more than 13 process codes, attach an additional sheet(s) with the information in the same format as above. Number the lines sequentially, taking into account any lines that will be used for "other" processes (i.e., D99, S99, T04 and X99) in Item 8.

8. Other Processes (Follow instructions from Item 7 for D99, S99, T04 and X99 process codes)

Line Number (Enter #s in sequence with Item 7)		A. Process Code (From list above)			B. PROCESS DESIGN CAPACITY (1) Amount (Specify)	B. PROCESS DESIGN CAPACITY (2) Unit of Measure	C. Process Total Number of Units	For Official Use Only					
X	**2**	**T**	**0**	**4**	**100.00**	**U**	**001**						
	1	S	9	9	600	See Line 2	001						
	2				To be closed in accordance with Code of Federal Regulations (CFR), Tilte 40, Part 265, Subpart G. Permitted status is not requested. The unit of measure for capacity is gallons.								

7. Process Codes and Design Capacities (Continued)

EXAMPLE FOR COMPLETING Item 7 (shown in line number X-1 below): A facility has a storage tank, which can hold 533,788 gallons.

Line Number		A. Process Code (From list above)			B. PROCESS DESIGN CAPACITY (1) Amount (Specify)	B. PROCESS DESIGN CAPACITY (2) Unit of Measure	C. Process Total Number of Units	For Official Use Only					
X	**1**	**S**	**0**	**2**	**533.788**	**G**	**001**						
Technical Area 54, Area G													
	1	S	0	1	4,346,590	G	009						
	2	S	0	1	4,950	See Line 4	001						
	3	D	8	0	14	See Line 5	001						
	4				To be closed in accordance with Code of Federal Regulations (CFR), Tilte 40, Part 265, Subpart G. Permitted status is not requested. The unit of measure for capacity is gallons.								
	5				To be closed in accordance with Code of Federal Regulations (CFR), Tilte 40, Part 265, Subpart G. Permitted status is not requested. The unit of measure for capacity is cubic yards.								
	6												
	7												
	8												
	9												
1	**0**												
1	**1**												
1	**2**												
1	**3**												

NOTE: If you need to list more than 13 process codes, attach an additional sheet(s) with the information in the same format as above. Number the lines sequentially, taking into account any lines that will be used for "other" processes (i.e., D99, S99, T04 and X99) in Item 8.

8. Other Processes (Follow instructions from Item 7 for D99, S99, T04 and X99 process codes)

Line Number (Enter #s in sequence with Item 7)		A. Process Code (From list above)			B. PROCESS DESIGN CAPACITY (1) Amount (Specify)	B. PROCESS DESIGN CAPACITY (2) Unit of Measure	C. Process Total Number of Units	For Official Use Only					
X	**2**	**T**	**0**	**4**	**100.00**	**U**	**001**						

7. Process Codes and Design Capacities (Continued)

EXAMPLE FOR COMPLETING Item 7 (shown in line number X-1 below): A facility has a storage tank, which can hold 533,788 gallons.

Line Number		A. Process Code (From list above)			B. PROCESS DESIGN CAPACITY (1) Amount (Specify)	(2) Unit of Measure	C. Process Total Number of Units	For Official Use Only					
X	**1**	**S**	**0**	**2**	**533.788**	**G**	**001**						
Technical Area 54 West													
	1	S	0	1	11,600	G	002						
	2												
	3												
	4												
	5												
	6												
	7												
	8												
	9												
1	**0**												
1	**1**												
1	**2**												
1	**3**												

NOTE: If you need to list more than 13 process codes, attach an additional sheet(s) with the information in the same format as above. Number the lines sequentially, taking into account any lines that will be used for "other" processes (i.e., D99, S99, T04 and X99) in Item 8.

8. Other Processes (Follow instructions from Item 7 for D99, S99, T04 and X99 process codes)

Line Number (Enter #s in sequence with Item 7)		A. Process Code (From list above)			B. PROCESS DESIGN CAPACITY (1) Amount (Specify)	(2) Unit of Measure	C. Process Total Number of Units	For Official Use Only					
X	**2**	**T**	**0**	**4**	**100.00**	**U**	**001**						

7. Process Codes and Design Capacities (Continued)

EXAMPLE FOR COMPLETING Item 7 (shown in line number X-1 below): A facility has a storage tank, which can hold 533,788 gallons.

Line Number		A. Process Code (From list above)			B. PROCESS DESIGN CAPACITY (1) Amount (Specify)	B. PROCESS DESIGN CAPACITY (2) Unit of Measure	C. Process Total Number of Units	For Official Use Only					
X	**1**	**S**	**0**	**2**	**533.788**	**G**	**001**						
Technical Area 54, Material Disposal Area H													
	1	D	8	0	63	See Line 2	001						
	2				To be closed in accordance with Code of Federal Regulations (CFR), Tilte 40, Part 265, Subpart G. Permitted status is not requested. The unit of measure for capacity is cubic yards.								
	3												
	4												
	5												
	6												
	7												
	8												
	9												
1	**0**												
1	**1**												
1	**2**												
1	**3**												

NOTE: If you need to list more than 13 process codes, attach an additional sheet(s) with the information in the same format as above. Number the lines sequentially, taking into account any lines that will be used for "other" processes (i.e., D99, S99, T04 and X99) in Item 8.

8. Other Processes (Follow instructions from Item 7 for D99, S99, T04 and X99 process codes)

Line Number (Enter #s in sequence with Item 7)		A. Process Code (From list above)			B. PROCESS DESIGN CAPACITY (1) Amount (Specify)	B. PROCESS DESIGN CAPACITY (2) Unit of Measure	C. Process Total Number of Units	For Official Use Only					
X	**2**	**T**	**0**	**4**	**100.00**	**U**	**001**						

7. Process Codes and Design Capacities (Continued)

EXAMPLE FOR COMPLETING Item 7 (shown in line number X-1 below): A facility has a storage tank, which can hold 533,788 gallons.

Line Number		A. Process Code (From list above)			B. PROCESS DESIGN CAPACITY (1) Amount (Specify)	B. PROCESS DESIGN CAPACITY (2) Unit of Measure	C. Process Total Number of Units	For Official Use Only					
X	**1**	**S**	**0**	**2**	**533.788**	**G**	**001**						
Technical Area 55													
	1	S	0	1	208,500	G	007						
	2	S	0	2	137	G	001						
	3												
	4												
	5												
	6												
	7												
	8												
	9												
1	**0**												
1	**1**												
1	**2**												
1	**3**												

NOTE: If you need to list more than 13 process codes, attach an additional sheet(s) with the information in the same format as above. Number the lines sequentially, taking into account any lines that will be used for "other" processes (i.e., D99, S99, T04 and X99) in Item 8.

8. Other Processes (Follow instructions from Item 7 for D99, S99, T04 and X99 process codes)

Line Number (Enter #s in sequence with Item 7)		A. Process Code (From list above)			B. PROCESS DESIGN CAPACITY (1) Amount (Specify)	B. PROCESS DESIGN CAPACITY (2) Unit of Measure	C. Process Total Number of Units	For Official Use Only					
X	**2**	**T**	**0**	**4**	**100.00**	**U**	**001**						
	3	T	0	4	150	G	001						

7. Process Codes and Design Capacities (Continued)

EXAMPLE FOR COMPLETING Item 7 (shown in line number X-1 below): A facility has a storage tank, which can hold 533,788 gallons.

Line Number		A. Process Code (From list above)			B. PROCESS DESIGN CAPACITY (1) Amount (Specify)	B. PROCESS DESIGN CAPACITY (2) Unit of Measure	C. Process Total Number of Units	For Official Use Only					
X	1	S	0	2	533.788	G	001						
Technical Area 63													
	1				105,875	G	001						
	2												
	3												
	4												
	5												
	6												
	7												
	8												
	9												
1	0												
1	1												
1	2												
1	3												

NOTE: If you need to list more than 13 process codes, attach an additional sheet(s) with the information in the same format as above. Number the lines sequentially, taking into account any lines that will be used for "other" processes (i.e., D99, S99, T04 and X99) in Item 8.

8. Other Processes (Follow instructions from Item 7 for D99, S99, T04 and X99 process codes)

Line Number (Enter #s in sequence with Item 7)		A. Process Code (From list above)			B. PROCESS DESIGN CAPACITY (1) Amount (Specify)	B. PROCESS DESIGN CAPACITY (2) Unit of Measure	C. Process Total Number of Units	For Official Use Only					
X	2	T	0	4	100.00	U	001						

9. Description of Hazardous Wastes – Enter information in the Sections on Form Page 5

D. EPA HAZARDOUS WASTE NUMBER – Enter the four-digit number from 40 CFR, Part 261 Subpart D of each listed hazardous waste you will handle. For hazardous wastes which are not listed in 40 CFR, Part 261 Subpart D, enter the four-digit number(s) from 40 CFR 261, Subpart C that describes the characteristics and/or the toxic contaminants of those hazardous wastes.

E. ESTIMATED ANNUAL QUANTITY – For each listed waste entered in Item 9.A, estimate the quantity of that waste that will be handled on an annual basis. For each characteristic or toxic contaminant entered in Item 9.A, estimate the total annual quantity of all the non-listed waste(s) that will be handled which possess that characteristic or contaminant.

F. UNIT OF MEASURE – For each quantity entered in Item 9.B, enter the unit of measure code. Units of measure which must be used and the appropriate codes are:

ENGLISH UNIT OF MEASURE	CODE	METRIC UNIT OF MEASURE	CODE
POUNDS	P	KILOGRAMS	K
TONS	T	METRIC TONS	M

If facility records use any other unit of measure for quantity, the units of measure must be converted into one of the required units of measure, taking into account the appropriate density or specific gravity of the waste.

A. PROCESSES

1. PROCESS CODES:

For listed hazardous waste: For each listed hazardous waste entered in Item 9.A, select the code(s) from the list of process codes contained in Items 7.A and 8.A on page 3 to indicate all the processes that will be used to store, treat, and/or dispose of all the listed hazardous wastes.

For non-listed hazardous waste: For each characteristic or toxic contaminant entered in Item 9.A, select the code(s) from the list of process codes contaminated in Items 7.A and 8.A on page 3 to indicate all the processes that will be used to store, treat, and/or dispose of all the non-listed hazardous wastes that possess that characteristic or toxic contaminant.

NOTE: THREE SPACES ARE PROVIDED FOR ENTERING PROCESS CODES. IF MORE ARE NEEDED:

1. Enter the first two as described above.

2. Enter "000" in the extreme right box of Item 9.D(1).

3. Use additional sheet, enter line number from previous sheet, and enter additional code(s) in Item 9.E.

2. PROCESS DESCRIPTION: If a code is not listed for a process that will be used, describe the process in Item 9.D(2) or in Item 9.E(2).

NOTE: HAZARDOUS WASTES DESCRIBED BY MORE THAN ONE EPA HAZARDOUS WASTE NUMBER – Hazardous waste that can be described by more than one EPA Hazardous Waste Number shall be described on the form as follows:

1. Select one of the EPA Hazardous Waste Numbers and enter it in Item 9.A. On the same line complete Items 9.B, 9.C and 9.D by estimating the total annual quantity of the waste and describing all the processes to be used to store, treat, and/or dispose of the waste.

2. In Item 9.A of the next line enter the other EPA Hazardous Waste Number that can be used to describe the waste. In Item 9.D.2 on that line enter "included with above" and make no other entries on that line.

3. Repeat step 2 for each EPA Hazardous Waste Number that can be used to describe the hazardous waste.

EXAMPLE FOR COMPLETING Item 9 (shown in line numbers X-1, X-2, X-3, and X-4 below) – A facility will treat and dispose of an estimated 900 pounds per year of chrome shavings from leather tanning and finishing operations. In addition, the facility will treat and dispose of three non-listed wastes. Two wastes area corrosive only and there will be an estimated 200 pounds per year of each waste. The other waste is corrosive and ignitable and these will be an estimated 100 pounds per year of that waste. Treatment will be in an incinerator and disposal will be in a landfill.

Line Number		A. EPA Hazardous Waste No. (Enter code)				B. Estimated Annual Qty of Waste	C. Unit of Measure (Enter code)	D. PROCESSES									
								(1) PROCESS CODES (Enter code)									(2) PROCESS DESCRIPTION (If a code is not entered in 9.D(1))
X	**1**	K	0	5	4	900	P	T	0	3	D	8	0				
X	**2**	D	0	0	2	400	P	T	0	3	D	8	0				
X	**3**	D	0	0	1	100	P	T	0	3	D	8	0				
X	**4**	D	0	0	2												Included With Above

9. Descriptions of Hazardous Wastes (Continued. Use the Additional Sheet(s) as necessary; number pages as 5 a, etc.)

Line Number		A. EPA Hazardous Waste No. (Enter code)				B. Estimated Annual Quantity of Waste	C. Unit of Measure (Enter code)	D. PROCESSES (1) PROCESS CODES (Enter code)									(2) PROCESS DESCRIPTION (If a code is not entered in D(1))
Technical Area 3																	
	1	D	0	0	1	7,000	P	S	0	1							
	2	D	0	0	2	21,000	P	S	0	1							
	3	D	0	0	3	2,500	P	S	0	1							
	4	D	0	0	4	3,000	P	S	0	1							
	5	D	0	0	5	3,000	P	S	0	1							
	6	D	0	0	6	2,500	P	S	0	1							
	7	D	0	0	7	7,000	P	S	0	1							
	8	D	0	0	8	27,000	P	S	0	1							
	9	D	0	0	9	4,000	P	S	0	1							
1	0	D	0	1	0	2,500	P	S	0	1							
1	1	D	0	1	1	3,000	P	S	0	1							
1	2	D	0	1	2	1,000	P	S	0	1							
1	3	D	0	1	8	1,500	P	S	0	1							
1	4	D	0	1	9	2,000	P	S	0	1							
1	5	D	0	2	1	2,000	P	S	0	1							
1	6	D	0	2	2	2,000	P	S	0	1							
1	7	D	0	2	3	2,000	P	S	0	1							
1	8	D	0	2	4	2,000	P	S	0	1							
1	9	D	0	2	5	2,000	P	S	0	1							
2	0	D	0	2	6	2,000	P	S	0	1							
2	1	D	0	2	7	1,500	P	S	0	1							
2	2	D	0	2	8	2,000	P	S	0	1							
2	3	D	0	2	9	1,000	P	S	0	1							
2	4	D	0	3	0	1,500	P	S	0	1							
2	5	D	0	3	2	1,500	P	S	0	1							
2	6	D	0	3	3	1,500	P	S	0	1							
2	7	D	0	3	4	1,500	P	S	0	1							
2	8	D	0	3	5	3,500	P	S	0	1							
2	9	D	0	3	6	1,500	P	S	0	1							
3	0	D	0	3	7	1,000	P	S	0	1							
3	1	D	0	3	8	1,500	P	S	0	1							
3	2	D	0	3	9	2,500	P	S	0	1							
3	3	D	0	4	0	2,500	P	S	0	1							
3	4	D	0	4	2	1,500	P	S	0	1							
3	5	D	0	4	3	1,500	P	S	0	1							
3	6	F	0	0	1	21,000	P	S	0	1							
3	7	F	0	0	2	21,000	P	S	0	1							
3	8	F	0	0	3	21,000	P	S	0	1							
3	9	F	0	0	4	2,500	P	S	0	1							

9. Descriptions of Hazardous Wastes (Continued. Use the Additional Sheet(s) as necessary; number pages as 5 a, etc.)

Line Number	*A. EPA Hazardous Waste No. (Enter code)*		*B. Estimated Annual Quantity of Waste*	*C. Unit of Measure (Enter code)*	*D. PROCESSES*										
					(1) PROCESS CODES (Enter code)										*(2) PROCESS DESCRIPTION (If a code is not entered in D(1))*
Technical Area 3 (Continued)															
4	0	F	0	0	5	21,000	P	S	0	1					
4	1	F	0	0	6	500	P	S	0	1					
4	2	F	0	0	7	500	P	S	0	1					
4	3	F	0	0	9	500	P	S	0	1					
4	4	P	0	0	3	1,000	P	S	0	1					
4	5	P	0	1	2	1,000	P	S	0	1					
4	6	P	0	1	5	1,000	P	S	0	1					
4	7	P	0	2	9	1,000	P	S	0	1					
4	8	P	0	3	0	1,000	P	S	0	1					
4	9	P	0	3	1	1,000	P	S	0	1					
5	0	P	0	3	8	1,000	P	S	0	1					
5	1	P	0	5	6	1,000	P	S	0	1					
5	2	P	0	6	3	1,000	P	S	0	1					
5	3	P	0	6	8	1,000	P	S	0	1					
5	4	P	0	7	3	1,000	P	S	0	1					
5	5	P	0	7	6	1,000	P	S	0	1					
5	6	P	0	7	8	1,000	P	S	0	1					
5	7	P	0	9	5	1,000	P	S	0	1					
5	8	P	0	9	6	1,000	P	S	0	1					
5	9	P	0	9	8	1,000	P	S	0	1					
6	0	P	0	9	9	500	P	S	0	1					
6	1	P	1	0	6	1,000	P	S	0	1					
6	2	P	1	1	3	1,000	P	S	0	1					
6	3	P	1	2	0	1,000	P	S	0	1					
6	4	U	0	0	1	1,000	P	S	0	1					
6	5	U	0	0	2	1,000	P	S	0	1					
6	6	U	0	0	3	1,000	P	S	0	1					
6	7	U	0	1	2	1,000	P	S	0	1					
6	8	U	0	1	9	1,000	P	S	0	1					
6	9	U	0	2	2	1,000	P	S	0	1					
7	0	U	0	2	9	1,000	P	S	0	1					
7	1	U	0	3	1	1,000	P	S	0	1					
7	2	U	0	3	7	1,000	P	S	0	1					
7	3	U	0	4	4	1,000	P	S	0	1					
7	4	U	0	4	5	1,000	P	S	0	1					
7	5	U	0	5	2	1,000	P	S	0	1					
7	6	U	0	5	6	1,000	P	S	0	1					
7	7	U	0	5	7	1,000	P	S	0	1					
7	8	U	0	7	5	1,000	P	S	0	1					

9. Descriptions of Hazardous Wastes (*Continued. Use the Additional Sheet(s) as necessary; number pages as 5 a, etc.*)

Line Number	A. EPA Hazardous Waste No. (Enter code)	B. Estimated Annual Quantity of Waste	C. Unit of Measure (Enter code)	D. PROCESSES (1) PROCESS CODES (Enter code)													D. PROCESSES (2) PROCESS DESCRIPTION (If a code is not entered in D(1))
Technical Area 3 (Continued)																	
7	9 U 0 7 7	1,000	P	S	0	1											
8	0 U 0 8 0	1,000	P	S	0	1											
8	1 U 1 0 8	1,000	P	S	0	1											
8	2 U 1 0 3	500	P	S	0	1											
8	3 U 1 1 2	1,000	P	S	0	1											
8	4 U 1 1 5	1,000	P	S	0	1											
8	5 U 1 1 7	1,000	P	S	0	1											
8	6 U 1 2 1	1,000	P	S	0	1											
8	7 U 1 2 2	1,000	P	S	0	1											
8	8 U 1 2 3	1,000	P	S	0	1											
8	9 U 1 3 1	1,000	P	S	0	1											
9	0 U 1 3 3	1,000	P	S	0	1											
9	1 U 1 3 4	1,000	P	S	0	1											
9	2 U 1 3 5	1,000	P	S	0	1											
9	3 U 1 4 0	1,000	P	S	0	1											
9	4 U 1 4 4	1,000	P	S	0	1											
9	5 U 1 5 1	1,000	P	S	0	1											
9	6 U 1 5 4	1,000	P	S	0	1											
9	7 U 1 5 9	1,000	P	S	0	1											
9	8 U 1 6 0	1,000	P	S	0	1											
9	9 U 1 6 1	1,000	P	S	0	1											
1 0	0 U 1 6 5	1,000	P	S	0	1											
1 0	1 U 1 6 9	1,000	P	S	0	1											
1 0	2 U 1 8 8	1,000	P	S	0	1											
1 0	3 U 1 9 0	1,000	P	S	0	1											
1 0	4 U 1 9 6	1,000	P	S	0	1											
1 0	5 U 2 0 4	1,000	P	S	0	1											
1 0	6 U 2 1 0	1,000	P	S	0	1											
1 0	7 U 2 1 1	1,000	P	S	0	1											
1 0	8 U 2 1 3	1,000	P	S	0	1											
1 0	9 U 2 1 6	1,000	P	S	0	1											
1 1	0 U 2 1 8	1,000	P	S	0	1											
1 1	1 U 2 1 9	1,000	P	S	0	1											
1 1	2 U 2 2 0	1,000	P	S	0	1											
1 1	3 U 2 2 5	500	P	S	0	1											
1 1	4 U 2 2 6	1,000	P	S	0	1											
1 1	5 U 2 2 7	500	P	S	0	1											
1 1	6 U 2 2 8	1,000	P	S	0	1											
1 1	7 U 2 3 9	500	P	S	0	1											

9. Descriptions of Hazardous Wastes (Continued. Use the Additional Sheet(s) as necessary; number pages as 5 a, etc.)

Line Number	*A. EPA Hazardous Waste No. (Enter code)*	*B. Estimated Annual Quantity of Waste*	*C. Unit of Measure (Enter code)*	*D. PROCESSES*	
				(1) PROCESS CODES (Enter code)	*(2) PROCESS DESCRIPTION (If a code is not entered in D(1))*
Technical Area 3 (Continued)					
1 1 8	U 2 4 6	500	P	S 0 1	

9. Descriptions of Hazardous Wastes (Continued. Use the Additional Sheet(s) as necessary; number pages as 5 a, etc.)

Line Number		A. EPA Hazardous Waste No. (Enter code)				B. Estimated Annual Quantity of Waste	C. Unit of Measure (Enter code)	D. PROCESSES (1) PROCESS CODES (Enter code)									(2) PROCESS DESCRIPTION (If a code is not entered in D(1))
Technical Area 14																	
	1	D	0	0	1	2,000	P	X	0	1							
	2	D	0	0	3												Included with above.
	3	D	0	0	5												Included with above.
	4	D	0	0	6												Included with above.
	5	D	0	0	7												Included with above.
	6	D	0	0	8												Included with above.
	7	D	0	0	9												Included with above.
	8	D	0	1	1												Included with above.
	9	D	0	1	8												Included with above.
1	0	D	0	2	2												Included with above.
1	1	D	0	2	8												Included with above.
1	2	D	0	2	9												Included with above.
1	3	D	0	3	0												Included with above.
1	4	D	0	3	5												Included with above.
1	5	D	0	3	6												Included with above.
1	6	D	0	3	8												Included with above.
1	7	D	0	4	0												Included with above.
1	8	F	0	0	1												Included with above.
1	9	F	0	0	2												Included with above.
2	0	F	0	0	3												Included with above.
2	1	F	0	0	4												Included with above.
2	2	F	0	0	5												Included with above.
2	3																
2	4																
2	5																
2	6																
2	7																
2	8																
2	9																
3	0																
3	1																
3	2																
3	3																
3	4																
3	5																
3	6																
3	7																
3	8																
3	9																

9. Descriptions of Hazardous Wastes (Continued. Use the Additional Sheet(s) as necessary; number pages as 5 a, etc.)

Line Number		A. EPA Hazardous Waste No. (Enter code)				B. Estimated Annual Quantity of Waste	C. Unit of Measure (Enter code)	D. PROCESSES (1) PROCESS CODES (Enter code)									(2) PROCESS DESCRIPTION (If a code is not entered in D(1))
Technical Area 16																	
	1	D	0	0	1	20,000	P	X	0	1							
	2	D	0	0	2												Included with above.
	3	D	0	0	3												Included with above.
	4	D	0	0	5												Included with above.
	5	D	0	0	6												Included with above.
	6	D	0	0	7												Included with above.
	7	D	0	0	8												Included with above.
	8	D	0	0	9												Included with above.
	9	D	0	1	0												Included with above.
1	0	D	0	1	1												Included with above.
1	1	D	0	1	8												Included with above.
1	2	D	0	2	2												Included with above.
1	3	D	0	2	8												Included with above.
1	4	D	0	2	9												Included with above.
1	5	D	0	3	0												Included with above.
1	6	D	0	3	5												Included with above.
1	7	D	0	3	6												Included with above.
1	8	D	0	3	8												Included with above.
1	9	D	0	4	0												Included with above.
2	0	F	0	0	1												Included with above.
2	1	F	0	0	2												Included with above.
2	2	F	0	0	3												Included with above.
2	3	F	0	0	4												Included with above.
2	4	F	0	0	5												Included with above.
2	5	K	0	4	4												Included with above.
2	6	K	0	4	5												Included with above.
2	7																
2	8																
2	9																
3	0																
3	1																
3	2																
3	3																
3	4																
3	5																
3	6																
3	7																
3	8																
3	9																

9. Descriptions of Hazardous Wastes (Continued. Use the Additional Sheet(s) as necessary; number pages as 5 a, etc.)

Line Number		A. EPA Hazardous Waste No. (Enter code)				B. Estimated Annual Quantity of Waste	C. Unit of Measure (Enter code)	D. PROCESSES (1) PROCESS CODES (Enter code)									(2) PROCESS DESCRIPTION (If a code is not entered in D(1))
Technical Area 36																	
	1	D	0	0	1	15,000	P	X	0	1							
	2	D	0	0	3												Included with above.
	3	D	0	0	5												Included with above.
	4	D	0	0	6												Included with above.
	5	D	0	0	7												Included with above.
	6	D	0	0	8												Included with above.
	7	D	0	0	9												Included with above.
	8	D	0	1	0												Included with above.
	9	D	0	1	1												Included with above.
1	0	D	0	1	8												Included with above.
1	1	D	0	2	2												Included with above.
1	2	D	0	2	8												Included with above.
1	3	D	0	2	9												Included with above.
1	4	D	0	3	0												Included with above.
1	5	D	0	3	5												Included with above.
1	6	D	0	3	6												Included with above.
1	7	D	0	3	8												Included with above.
1	8	D	0	4	0												Included with above.
1	9	F	0	0	1												Included with above.
2	0	F	0	0	2												Included with above.
2	1	F	0	0	3												Included with above.
2	2	F	0	0	4												Included with above.
2	3	F	0	0	5												Included with above.
2	4																
2	5																
2	6																
2	7																
2	8																
2	9																
3	0																
3	1																
3	2																
3	3																
3	4																
3	5																
3	6																
3	7																
3	8																
3	9																

9. Descriptions of Hazardous Wastes (Continued. Use the Additional Sheet(s) as necessary; number pages as 5 a, etc.)

Line Number		A. EPA Hazardous Waste No. (Enter code)				B. Estimated Annual Quantity of Waste	C. Unit of Measure (Enter code)	D. PROCESSES (1) PROCESS CODES (Enter code)									(2) PROCESS DESCRIPTION (If a code is not entered in D(1))
Technical Area 39																	
	1	D	0	0	1	15,000	P	X	0	1							
	2	D	0	0	3												Included with above.
	3	D	0	0	5												Included with above.
	4	D	0	0	6												Included with above.
	5	D	0	0	7												Included with above.
	6	D	0	0	8												Included with above.
	7	D	0	0	9												Included with above.
	8	D	0	1	0												Included with above.
	9	D	0	1	1												Included with above.
1	0	D	0	1	8												Included with above.
1	1	D	0	2	2												Included with above.
1	2	D	0	2	8												Included with above.
1	3	D	0	2	9												Included with above.
1	4	D	0	3	0												Included with above.
1	5	D	0	3	5												Included with above.
1	6	D	0	3	6												Included with above.
1	7	D	0	3	8												Included with above.
1	8	D	0	4	0												Included with above.
1	9	F	0	0	1												Included with above.
2	0	F	0	0	2												Included with above.
2	1	F	0	0	3												Included with above.
2	2	F	0	0	4												Included with above.
2	3	F	0	0	5												Included with above.
2	4																
2	5																
2	6																
2	7																
2	8																
2	9																
3	0																
3	1																
3	2																
3	3																
3	4																
3	5																
3	6																
3	7																
3	8																
3	9																

9. Descriptions of Hazardous Wastes (Continued. Use the Additional Sheet(s) as necessary; number pages as 5 a, etc.)

Line Number		*A. EPA Hazardous Waste No. (Enter code)*				*B. Estimated Annual Quantity of Waste*	*C. Unit of Measure (Enter code)*	*D. PROCESSES*									
								(1) PROCESS CODES (Enter code)									*(2) PROCESS DESCRIPTION (If a code is not entered in D(1))*
Technical Area 50																	
	1	D	0	0	1	69,696	P	S	0	1							
	2	D	0	0	2	52,734	P	S	0	1							
	3	D	0	0	3	3,444	P	S	0	1							
	4	D	0	0	4	7,531	P	S	0	1							
	5	D	0	0	5	7,740	P	S	0	1							
	6	D	0	0	6	535, 451	P	S	0	1							
	7	D	0	0	7	567, 226	P	S	0	1							
	8	D	0	0	8	1,405,439	P	S	0	1							
	9	D	0	0	9	75,666	P	S	0	1							
1	0	D	0	1	0	8,922	P	S	0	1							
1	1	D	0	1	1	31,255	P	S	0	1							
1	2	D	0	1	2	100	P	S	0	1							
1	3	D	0	1	3	100	P	S	0	1							
1	4	D	0	1	4	100	P	S	0	1							
1	5	D	0	1	5	100	P	S	0	1							
1	6	D	0	1	6	44	P	S	0	1							
1	7	D	0	1	7	66	P	S	0	1							
1	8	D	0	1	8	5,535	P	S	0	1							
1	9	D	0	1	9	4,261	P	S	0	1							
2	0	D	0	2	0	100	P	S	0	1							
2	1	D	0	2	1	100	P	S	0	1							
2	2	D	0	2	2	100	P	S	0	1							
2	3	D	0	2	3	100	P	S	0	1							
2	4	D	0	2	4	100	P	S	0	1							
2	5	D	0	2	5	100	P	S	0	1							
2	6	D	0	2	6	518	P	S	0	1							
2	7	D	0	2	7	972	P	S	0	1							
2	8	D	0	2	8	216,783	P	S	0	1							
2	9	D	0	2	9	215,184	P	S	0	1							
3	0	D	0	3	0	5,491	P	S	0	1							
3	1	D	0	3	1	293	P	S	0	1							
3	2	D	0	3	2	3,135	P	S	0	1							
3	3	D	0	3	3	2,222	P	S	0	1							
3	4	D	0	3	4	1,228	P	S	0	1							
3	5	D	0	3	5	1,792	P	S	0	1							
3	6	D	0	3	6	549	P	S	0	1							
3	7	D	0	3	7	761	P	S	0	1							
3	8	D	0	3	8	1,549	P	S	0	1							
3	9	D	0	3	9	1,675	P	S	0	1							

9. Descriptions of Hazardous Wastes (Continued. Use the Additional Sheet(s) as necessary; number pages as 5 a, etc.)

Line Number	*A. EPA Hazardous Waste No. (Enter code)*	*B. Estimated Annual Quantity of Waste*	*C. Unit of Measure (Enter code)*	*D. PROCESSES*													
				(1) PROCESS CODES (Enter code)													*(2) PROCESS DESCRIPTION (If a code is not entered in D(1))*
Technical Area 50 (Continued)																	
4 0	D 0 4 0	3,942	P	S	0	1											
4 1	D 0 4 1	293	P	S	0	1											
4 2	D 0 4 2	1,182	P	S	0	1											
4 3	D 0 4 3	655	P	S	0	1											
4 4	F 0 0 1	442,263	P	S	0	1											
4 5	F 0 0 2	147,347	P	S	0	1											
4 6	F 0 0 3	50,980	P	S	0	1											
4 7	F 0 0 4	2,817	P	S	0	1											
4 8	F 0 0 5	334,821	P	S	0	1											
4 9	F 0 0 6	100	P	S	0	1											
5 0	F 0 0 7	100	P	S	0	1											
5 1	F 0 0 8	100	P	S	0	1											
5 2	F 0 0 9	165	P	S	0	1											
5 3	F 0 1 0	100	P	S	0	1											
5 4	F 0 1 1	100	P	S	0	1											
5 5	F 0 1 2	100	P	S	0	1											
5 6	F 0 1 9	100	P	S	0	1											
5 7	F 0 2 0	100	P	S	0	1											
5 8	F 0 2 1	100	P	S	0	1											
5 9	F 0 2 2	100	P	S	0	1											
6 0	F 0 2 3	100	P	S	0	1											
6 1	F 0 2 4	100	P	S	0	1											
6 2	F 0 2 5	100	P	S	0	1											
6 3	F 0 2 6	100	P	S	0	1											
6 4	F 0 2 7	165	P	S	0	1											
6 5	F 0 2 8	100	P	S	0	1											
6 6	F 0 3 2	100	P	S	0	1											
6 7	F 0 3 4	100	P	S	0	1											
6 8	F 0 3 5	100	P	S	0	1											
6 9	F 0 3 7	100	P	S	0	1											
7 0	F 0 3 8	100	P	S	0	1											
7 1	F 0 3 9	100	P	S	0	1											
7 2	K 0 4 4	100	P	S	0	1											
7 3	K 0 4 5	100	P	S	0	1											
7 4	K 0 4 6	100	P	S	0	1											
7 5	K 0 4 7	100	P	S	0	1											
7 6	K 0 8 4	100	P	S	0	1											
7 7	K 1 0 1	100	P	S	0	1											
7 8	K 1 0 2	100	P	S	0	1											

9. Descriptions of Hazardous Wastes (Continued. Use the Additional Sheet(s) as necessary; number pages as 5 a, etc.)

Line Number			A. EPA Hazardous Waste No. (Enter code)				B. Estimated Annual Quantity of Waste	C. Unit of Measure (Enter code)	D. PROCESSES (1) PROCESS CODES (Enter code)									(2) PROCESS DESCRIPTION (If a code is not entered in D(1))
Technical Area 50 (Continued)																		
	7	9	P	0	0	1	100	P	S	0	1							
	8	0	P	0	0	2	100	P	S	0	1							
	8	1	P	0	0	3	293	P	S	0	1							
	8	2	P	0	0	4	100	P	S	0	1							
	8	3	P	0	0	5	100	P	S	0	1							
	8	4	P	0	0	6	143	P	S	0	1							
	8	5	P	0	0	7	100	P	S	0	1							
	8	6	P	0	0	8	100	P	S	0	1							
	8	7	P	0	0	9	100	P	S	0	1							
	8	8	P	0	1	0	100	P	S	0	1							
	8	9	P	0	1	1	143	P	S	0	1							
	9	0	P	0	1	2	293	P	S	0	1							
	9	1	P	0	1	3	100	P	S	0	1							
	9	2	P	0	1	4	100	P	S	0	1							
	9	3	P	0	1	5	293	P	S	0	1							
	9	4	P	0	1	6	100	P	S	0	1							
	9	5	P	0	1	7	100	P	S	0	1							
	9	6	P	0	1	8	100	P	S	0	1							
	9	7	P	0	2	0	100	P	S	0	1							
	9	8	P	0	2	1	100	P	S	0	1							
	9	9	P	0	2	2	100	P	S	0	1							
1	0	0	P	0	2	3	100	P	S	0	1							
1	0	1	P	0	2	4	100	P	S	0	1							
1	0	2	P	0	2	6	100	P	S	0	1							
1	0	3	P	0	2	7	100	P	S	0	1							
1	0	4	P	0	2	8	100	P	S	0	1							
1	0	5	P	0	2	9	293	P	S	0	1							
1	0	6	P	0	3	0	485	P	S	0	1							
1	0	7	P	0	3	1	485	P	S	0	1							
1	0	8	P	0	3	3	143	P	S	0	1							
1	0	9	P	0	3	4	100	P	S	0	1							
1	1	0	P	0	3	6	100	P	S	0	1							
1	1	1	P	0	3	7	100	P	S	0	1							
1	1	2	P	0	3	8	227	P	S	0	1							
1	1	3	P	0	3	9	100	P	S	0	1							
1	1	4	P	0	4	0	100	P	S	0	1							
1	1	5	P	0	4	1	100	P	S	0	1							
1	1	6	P	0	4	2	100	P	S	0	1							
1	1	7	P	0	4	3	143	P	S	0	1							

9. Descriptions of Hazardous Wastes (Continued. Use the Additional Sheet(s) as necessary; number pages as 5 a, etc.)

Line Number	A. EPA Hazardous Waste No. (Enter code)	B. Estimated Annual Quantity of Waste	C. Unit of Measure (Enter code)	D. PROCESSES (1) PROCESS CODES (Enter code)											D. PROCESSES (2) PROCESS DESCRIPTION (If a code is not entered in D(1))
Technical Area 50 (Continued)															
1 1 8	P 0 4 4	100	P	S	0	1									
1 1 9	P 0 4 5	100	P	S	0	1									
1 2 0	P 0 4 6	100	P	S	0	1									
1 2 1	P 0 4 7	100	P	S	0	1									
1 2 2	P 0 4 8	143	P	S	0	1									
1 2 3	P 0 4 9	100	P	S	0	1									
1 2 4	P 0 5 0	100	P	S	0	1									
1 2 5	P 0 5 1	100	P	S	0	1									
1 2 6	P 0 5 4	100	P	S	0	1									
1 2 7	P 0 5 6	2,624	P	S	0	1									
1 2 8	P 0 5 7	100	P	S	0	1									
1 2 9	P 0 5 8	100	P	S	0	1									
1 3 0	P 0 5 9	100	P	S	0	1									
1 3 1	P 0 6 0	100	P	S	0	1									
1 3 2	P 0 6 2	100	P	S	0	1									
1 3 3	P 0 6 3	293	P	S	0	1									
1 3 4	P 0 6 4	100	P	S	0	1									
1 3 5	P 0 6 5	100	P	S	0	1									
1 3 6	P 0 6 6	100	P	S	0	1									
1 3 7	P 0 6 7	100	P	S	0	1									
1 3 8	P 0 6 8	293	P	S	0	1									
1 3 9	P 0 6 9	100	P	S	0	1									
1 4 0	P 0 7 0	100	P	S	0	1									
1 4 1	P 0 7 1	100	P	S	0	1									
1 4 2	P 0 7 2	100	P	S	0	1									
1 4 3	P 0 7 3	293	P	S	0	1									
1 4 4	P 0 7 4	100	P	S	0	1									
1 4 5	P 0 7 5	100	P	S	0	1									
1 4 6	P 0 7 6	403	P	S	0	1									
1 4 7	P 0 7 7	100	P	S	0	1									
1 4 8	P 0 7 8	425	P	S	0	1									
1 4 9	P 0 8 1	100	P	S	0	1									
1 5 0	P 0 8 2	100	P	S	0	1									
1 5 1	P 0 8 4	100	P	S	0	1									
1 5 2	P 0 8 5	100	P	S	0	1									
1 5 3	P 0 8 7	100	P	S	0	1									
1 5 4	P 0 8 8	100	P	S	0	1									
1 5 5	P 0 8 9	100	P	S	0	1									
1 5 6	P 0 9 2	143	P	S	0	1									

9. Descriptions of Hazardous Wastes (Continued. Use the Additional Sheet(s) as necessary; number pages as 5 a, etc.)

Line Number	A. EPA Hazardous Waste No. (Enter code)	B. Estimated Annual Quantity of Waste	C. Unit of Measure (Enter code)	D. PROCESSES (1) PROCESS CODES (Enter code)													D. PROCESSES (2) PROCESS DESCRIPTION (If a code is not entered in D(1))
Technical Area 50 (Continued)																	
1 5 7	P 0 9 3	100	P	S	0	1											
1 5 8	P 0 9 4	100	P	S	0	1											
1 5 9	P 0 9 5	293	P	S	0	1											
1 6 0	P 0 9 6	293	P	S	0	1											
1 6 1	P 0 9 7	100	P	S	0	1											
1 6 2	P 0 9 8	293	P	S	0	1											
1 6 3	P 0 9 9	100	P	S	0	1											
1 6 4	P 1 0 1	100	P	S	0	1											
1 6 5	P 1 0 2	100	P	S	0	1											
1 6 6	P 1 0 3	100	P	S	0	1											
1 6 7	P 1 0 4	143	P	S	0	1											
1 6 8	P 1 0 5	143	P	S	0	1											
1 6 9	P 1 0 6	293	P	S	0	1											
1 7 0	P 1 0 8	100	P	S	0	1											
1 7 1	P 1 0 9	100	P	S	0	1											
1 7 2	P 1 1 0	100	P	S	0	1											
1 7 3	P 1 1 1	100	P	S	0	1											
1 7 4	P 1 1 2	143	P	S	0	1											
1 7 5	P 1 1 3	293	P	S	0	1											
1 7 6	P 1 1 4	100	P	S	0	1											
1 7 7	P 1 1 5	100	P	S	0	1											
1 7 8	P 1 1 6	100	P	S	0	1											
1 7 9	P 1 1 8	100	P	S	0	1											
1 8 0	P 1 1 9	143	P	S	0	1											
1 8 1	P 1 2 0	293	P	S	0	1											
1 8 2	P 1 2 1	100	P	S	0	1											
1 8 3	P 1 2 2	100	P	S	0	1											
1 8 4	P 1 2 3	100	P	S	0	1											
1 8 5	P 1 2 7	100	P	S	0	1											
1 8 6	P 1 2 8	100	P	S	0	1											
1 8 7	P 1 8 5	100	P	S	0	1											
1 8 8	P 1 8 8	100	P	S	0	1											
1 8 9	P 1 8 9	100	P	S	0	1											
1 9 0	P 1 9 0	100	P	S	0	1											
1 9 1	P 1 9 1	100	P	S	0	1											
1 9 2	P 1 9 2	100	P	S	0	1											
1 9 3	P 1 9 4	100	P	S	0	1											
1 9 4	P 1 9 6	100	P	S	0	1											
1 9 5	P 1 9 7	100	P	S	0	1											

9. Descriptions of Hazardous Wastes (Continued. Use the Additional Sheet(s) as necessary; number pages as 5 a, etc.)

Line Number	A. EPA Hazardous Waste No. (Enter code)	B. Estimated Annual Quantity of Waste	C. Unit of Measure (Enter code)	D. PROCESSES (1) PROCESS CODES (Enter code)											D. PROCESSES (2) PROCESS DESCRIPTION (If a code is not entered in D(1))
Technical Area 50 (Continued)															
196	P198	100	P	S	0	1									
197	P199	100	P	S	0	1									
198	P201	100	P	S	0	1									
199	P202	100	P	S	0	1									
200	P203	100	P	S	0	1									
201	P204	100	P	S	0	1									
202	P205	100	P	S	0	1									
203	U001	293	P	S	0	1									
204	U002	954	P	S	0	1									
205	U003	485	P	S	0	1									
206	U004	100	P	S	0	1									
207	U005	100	P	S	0	1									
208	U006	100	P	S	0	1									
209	U007	143	P	S	0	1									
210	U008	143	P	S	0	1									
211	U009	143	P	S	0	1									
212	U010	100	P	S	0	1									
213	U011	100	P	S	0	1									
214	U012	293	P	S	0	1									
215	U014	100	P	S	0	1									
216	U015	100	P	S	0	1									
217	U016	100	P	S	0	1									
218	U017	100	P	S	0	1									
219	U018	143	P	S	0	1									
220	U019	470	P	S	0	1									
221	U020	100	P	S	0	1									
222	U021	100	P	S	0	1									
223	U022	293	P	S	0	1									
224	U023	100	P	S	0	1									
225	U024	100	P	S	0	1									
226	U025	100	P	S	0	1									
227	U026	100	P	S	0	1									
228	U027	100	P	S	0	1									
229	U028	100	P	S	0	1									
230	U029	293	P	S	0	1									
231	U030	100	P	S	0	1									
232	U031	293	P	S	0	1									
233	U032	100	P	S	0	1									
234	U033	143	P	S	0	1									

9. Descriptions of Hazardous Wastes (Continued. Use the Additional Sheet(s) as necessary; number pages as 5 a, etc.)

Line Number	A. EPA Hazardous Waste No. (Enter code)	B. Estimated Annual Quantity of Waste	C. Unit of Measure (Enter code)	D. PROCESSES (1) PROCESS CODES (Enter code)													D. PROCESSES (2) PROCESS DESCRIPTION (If a code is not entered in D(1))
Technical Area 50 (Continued)																	
2 3 5	U 0 3 4	100	P	S	0	1											
2 3 6	U 0 3 5	100	P	S	0	1											
2 3 7	U 0 3 6	100	P	S	0	1											
2 3 8	U 0 3 7	143	P	S	0	1											
2 3 9	U 0 3 8	100	P	S	0	1											
2 4 0	U 0 3 9	100	P	S	0	1											
2 4 1	U 0 4 1	143	P	S	0	1											
2 4 2	U 0 4 2	100	P	S	0	1											
2 4 3	U 0 4 3	100	P	S	0	1											
2 4 4	U 0 4 4	293	P	S	0	1											
2 4 5	U 0 4 5	293	P	S	0	1											
2 4 6	U 0 4 6	100	P	S	0	1											
2 4 7	U 0 4 7	100	P	S	0	1											
2 4 8	U 0 4 8	100	P	S	0	1											
2 4 9	U 0 4 9	100	P	S	0	1											
2 5 0	U 0 5 0	100	P	S	0	1											
2 5 1	U 0 5 1	100	P	S	0	1											
2 5 2	U 0 5 2	293	P	S	0	1											
2 5 3	U 0 5 3	100	P	S	0	1											
2 5 4	U 0 5 5	143	P	S	0	1											
2 5 5	U 0 5 6	293	P	S	0	1											
2 5 6	U 0 5 7	293	P	S	0	1											
2 5 7	U 0 5 8	100	P	S	0	1											
2 5 8	U 0 5 9	100	P	S	0	1											
2 5 9	U 0 6 0	100	P	S	0	1											
2 6 0	U 0 6 1	100	P	S	0	1											
2 6 1	U 0 6 2	100	P	S	0	1											
2 6 2	U 0 6 3	100	P	S	0	1											
2 6 3	U 0 6 4	100	P	S	0	1											
2 6 4	U 0 6 6	100	P	S	0	1											
2 6 5	U 0 6 7	143	P	S	0	1											
2 6 6	U 0 6 8	143	P	S	0	1											
2 6 7	U 0 6 9	100	P	S	0	1											
2 6 8	U 0 7 0	165	P	S	0	1											
2 6 9	U 0 7 1	100	P	S	0	1											
2 7 0	U 0 7 2	100	P	S	0	1											
2 7 1	U 0 7 3	100	P	S	0	1											
2 7 2	U 0 7 4	100	P	S	0	1											
2 7 3	U 0 7 5	381	P	S	0	1											

9. Descriptions of Hazardous Wastes (Continued. Use the Additional Sheet(s) as necessary; number pages as 5 a, etc.)

Line Number	A. EPA Hazardous Waste No. (Enter code)	B. Estimated Annual Quantity of Waste	C. Unit of Measure (Enter code)	D. PROCESSES (1) PROCESS CODES (Enter code)									D. PROCESSES (2) PROCESS DESCRIPTION (If a code is not entered in D(1))
Technical Area 50 (Continued)													
2 7 4	U 0 7 6	100	P	S 0 1									
2 7 5	U 0 7 7	293	P	S 0 1									
2 7 6	U 0 7 8	100	P	S 0 1									
2 7 7	U 0 7 9	100	P	S 0 1									
2 7 8	U 0 8 0	4,129	P	S 0 1									
2 7 9	U 0 8 1	100	P	S 0 1									
2 8 0	U 0 8 2	100	P	S 0 1									
2 8 1	U 0 8 3	100	P	S 0 1									
2 8 2	U 0 8 4	100	P	S 0 1									
2 8 3	U 0 8 5	143	P	S 0 1									
2 8 4	U 0 8 6	100	P	S 0 1									
2 8 5	U 0 8 7	100	P	S 0 1									
2 8 6	U 0 8 8	100	P	S 0 1									
2 8 7	U 0 8 9	100	P	S 0 1									
2 8 8	U 0 9 0	100	P	S 0 1									
2 8 9	U 0 9 1	518	P	S 0 1									
2 9 0	U 0 9 2	143	P	S 0 1									
2 9 1	U 0 9 3	100	P	S 0 1									
2 9 2	U 0 9 4	100	P	S 0 1									
2 9 3	U 0 9 5	100	P	S 0 1									
2 9 4	U 0 9 6	100	P	S 0 1									
2 9 5	U 0 9 7	100	P	S 0 1									
2 9 6	U 0 9 8	100	P	S 0 1									
2 9 7	U 0 9 9	100	P	S 0 1									
2 9 8	U 1 0 1	100	P	S 0 1									
2 9 9	U 1 0 2	100	P	S 0 1									
3 0 0	U 1 0 3	143	P	S 0 1									
3 0 1	U 1 0 5	100	P	S 0 1									
3 0 2	U 1 0 6	100	P	S 0 1									
3 0 3	U 1 0 7	100	P	S 0 1									
3 0 4	U 1 0 8	293	P	S 0 1									
3 0 5	U 1 0 9	143	P	S 0 1									
3 0 6	U 1 1 0	100	P	S 0 1									
3 0 7	U 1 1 1	100	P	S 0 1									
3 0 8	U 1 1 2	293	P	S 0 1									
3 0 9	U 1 1 3	100	P	S 0 1									
3 1 0	U 1 1 4	100	P	S 0 1									
3 1 1	U 1 1 5	293	P	S 0 1									
3 1 2	U 1 1 6	100	P	S 0 1									

9. Descriptions of Hazardous Wastes (Continued. Use the Additional Sheet(s) as necessary; number pages as 5 a, etc.)

Line Number	A. EPA Hazardous Waste No. (Enter code)	B. Estimated Annual Quantity of Waste	C. Unit of Measure (Enter code)	D. PROCESSES (1) PROCESS CODES (Enter code)								D. PROCESSES (2) PROCESS DESCRIPTION (If a code is not entered in D(1))
Technical Area 50 (Continued)												
3 1 3	U 1 1 7	293	P	S 0 1								
3 1 4	U 1 1 8	100	P	S 0 1								
3 1 5	U 1 1 9	100	P	S 0 1								
3 1 6	U 1 2 0	100	P	S 0 1								
3 1 7	U 1 2 1	293	P	S 0 1								
3 1 8	U 1 2 2	778	P	S 0 1								
3 1 9	U 1 2 3	293	P	S 0 1								
3 2 0	U 1 2 4	143	P	S 0 1								
3 2 1	U 1 2 5	100	P	S 0 1								
3 2 2	U 1 2 6	100	P	S 0 1								
3 2 3	U 1 2 7	100	P	S 0 1								
3 2 4	U 1 2 8	100	P	S 0 1								
3 2 5	U 1 2 9	100	P	S 0 1								
3 2 6	U 1 3 0	100	P	S 0 1								
3 2 7	U 1 3 1	293	P	S 0 1								
3 2 8	U 1 3 2	100	P	S 0 1								
3 2 9	U 1 3 3	293	P	S 0 1								
3 3 0	U 1 3 4	667	P	S 0 1								
3 3 1	U 1 3 5	447	P	S 0 1								
3 3 2	U 1 3 6	143	P	S 0 1								
3 3 3	U 1 3 7	100	P	S 0 1								
3 3 4	U 1 3 8	100	P	S 0 1								
3 3 5	U 1 4 0	293	P	S 0 1								
3 3 6	U 1 4 1	100	P	S 0 1								
3 3 7	U 1 4 2	100	P	S 0 1								
3 3 8	U 1 4 3	100	P	S 0 1								
3 3 9	U 1 4 4	293	P	S 0 1								
3 4 0	U 1 4 5	293	P	S 0 1								
3 4 1	U 1 4 6	100	P	S 0 1								
3 4 2	U 1 4 7	100	P	S 0 1								
3 4 3	U 1 4 8	100	P	S 0 1								
3 4 4	U 1 4 9	100	P	S 0 1								
3 4 5	U 1 5 0	100	P	S 0 1								
3 4 6	U 1 5 1	884	P	S 0 1								
3 4 7	U 1 5 2	100	P	S 0 1								
3 4 8	U 1 5 3	143	P	S 0 1								
3 4 9	U 1 5 4	359	P	S 0 1								
3 5 0	U 1 5 5	100	P	S 0 1								
3 5 1	U 1 5 6	100	P	S 0 1								

9. Descriptions of Hazardous Wastes (Continued. Use the Additional Sheet(s) as necessary; number pages as 5 a, etc.)

Line Number			A. EPA Hazardous Waste No. (Enter code)				B. Estimated Annual Quantity of Waste	C. Unit of Measure (Enter code)	D. PROCESSES (1) PROCESS CODES (Enter code)									(2) PROCESS DESCRIPTION (If a code is not entered in D(1))
Technical Area 50 (Continued)																		
3	5	2	U	1	5	7	100	P	S	0	1							
3	5	3	U	1	5	8	100	P	S	0	1							
3	5	4	U	1	5	9	315	P	S	0	1							
3	5	5	U	1	6	0	293	P	S	0	1							
3	5	6	U	1	6	1	470	P	S	0	1							
3	5	7	U	1	6	2	143	P	S	0	1							
3	5	8	U	1	6	3	143	P	S	0	1							
3	5	9	U	1	6	4	100	P	S	0	1							
3	6	0	U	1	6	5	293	P	S	0	1							
3	6	1	U	1	6	6	100	P	S	0	1							
3	6	2	U	1	6	7	143	P	S	0	1							
3	6	3	U	1	6	8	143	P	S	0	1							
3	6	4	U	1	6	9	293	P	S	0	1							
3	6	5	U	1	7	0	143	P	S	0	1							
3	6	6	U	1	7	1	100	P	S	0	1							
3	6	7	U	1	7	2	100	P	S	0	1							
3	6	8	U	1	7	3	100	P	S	0	1							
3	6	9	U	1	7	4	100	P	S	0	1							
3	7	0	U	1	7	6	100	P	S	0	1							
3	7	1	U	1	7	7	100	P	S	0	1							
3	7	2	U	1	7	8	100	P	S	0	1							
3	7	3	U	1	7	9	100	P	S	0	1							
3	7	4	U	1	8	0	100	P	S	0	1							
3	7	5	U	1	8	1	100	P	S	0	1							
3	7	6	U	1	8	2	100	P	S	0	1							
3	7	7	U	1	8	3	100	P	S	0	1							
3	7	8	U	1	8	4	100	P	S	0	1							
3	7	9	U	1	8	5	100	P	S	0	1							
3	8	0	U	1	8	6	100	P	S	0	1							
3	8	1	U	1	8	7	100	P	S	0	1							
3	8	2	U	1	8	8	293	P	S	0	1							
3	8	3	U	1	8	9	100	P	S	0	1							
3	8	4	U	1	9	0	293	P	S	0	1							
3	8	5	U	1	9	1	100	P	S	0	1							
3	8	6	U	1	9	2	100	P	S	0	1							
3	8	7	U	1	9	3	100	P	S	0	1							
3	8	8	U	1	9	4	100	P	S	0	1							
3	8	9	U	1	9	6	293	P	S	0	1							
3	5	2	U	1	9	7	100	P	S	0	1							

9. Descriptions of Hazardous Wastes (Continued. Use the Additional Sheet(s) as necessary; number pages as 5 a, etc.)

Line Number	A. EPA Hazardous Waste No. (Enter code)	B. Estimated Annual Quantity of Waste	C. Unit of Measure (Enter code)	D. PROCESSES (1) PROCESS CODES (Enter code)													D. PROCESSES (2) PROCESS DESCRIPTION (If a code is not entered in D(1))
Technical Area 50 (Continued)																	
3 9 1	U 2 0 0	100	P	S	0	1											
3 9 2	U 2 0 1	100	P	S	0	1											
3 9 3	U 2 0 2	100	P	S	0	1											
3 9 4	U 2 0 3	100	P	S	0	1											
3 9 5	U 2 0 4	293	P	S	0	1											
3 9 6	U 2 0 5	100	P	S	0	1											
3 9 7	U 2 0 6	100	P	S	0	1											
3 9 8	U 2 0 7	100	P	S	0	1											
3 9 9	U 2 0 8	100	P	S	0	1											
4 0 0	U 2 0 9	100	P	S	0	1											
4 0 1	U 2 1 0	513	P	S	0	1											
4 0 2	U 2 1 1	359	P	S	0	1											
4 0 3	U 2 1 3	293	P	S	0	1											
4 0 4	U 2 1 4	100	P	S	0	1											
4 0 5	U 2 1 5	100	P	S	0	1											
4 0 6	U 2 1 6	293	P	S	0	1											
4 0 7	U 2 1 7	100	P	S	0	1											
4 0 8	U 2 1 8	293	P	S	0	1											
4 0 9	U 2 1 9	293	P	S	0	1											
4 1 0	U 2 2 0	491	P	S	0	1											
4 1 1	U 2 2 1	100	P	S	0	1											
4 1 2	U 2 2 2	100	P	S	0	1											
4 1 3	U 2 2 3	143	P	S	0	1											
4 1 4	U 2 2 5	293	P	S	0	1											
4 1 5	U 2 2 6	6,594	P	S	0	1											
4 1 6	U 2 2 7	293	P	S	0	1											
4 1 7	U 2 2 8	1,219	P	S	0	1											
4 1 8	U 2 3 4	100	P	S	0	1											
4 1 9	U 2 3 5	100	P	S	0	1											
4 2 0	U 2 3 6	100	P	S	0	1											
4 2 1	U 2 3 7	100	P	S	0	1											
4 2 2	U 2 3 8	100	P	S	0	1											
4 2 3	U 2 3 9	646	P	S	0	1											
4 2 4	U 2 4 0	143	P	S	0	1											
4 2 5	U 2 4 3	100	P	S	0	1											
4 2 6	U 2 4 4	100	P	S	0	1											
4 2 7	U 2 4 6	231	P	S	0	1											
4 2 8	U 2 4 7	100	P	S	0	1											
4 2 9	U 2 4 8	100	P	S	0	1											

9. Descriptions of Hazardous Wastes (Continued. Use the Additional Sheet(s) as necessary; number pages as 5 a, etc.)

Line Number			A. EPA Hazardous Waste No. (Enter code)				B. Estimated Annual Quantity of Waste	C. Unit of Measure (Enter code)	D. PROCESSES (1) PROCESS CODES (Enter code)									(2) PROCESS DESCRIPTION (If a code is not entered in D(1))
Technical Area 50 (Continued)																		
4	3	0	U	2	4	9	100	P	S	0	1							
4	3	1	U	2	7	1	100	P	S	0	1							
4	3	2	U	2	7	8	100	P	S	0	1							
4	3	3	U	2	7	9	100	P	S	0	1							
4	3	4	U	2	8	0	100	P	S	0	1							
4	3	5	U	3	2	8	100	P	S	0	1							
4	3	6	U	3	5	3	100	P	S	0	1							
4	3	7	U	3	5	9	100	P	S	0	1							
4	3	8	U	3	6	4	100	P	S	0	1							
4	3	9	U	3	6	7	100	P	S	0	1							
4	4	0	U	3	7	2	100	P	S	0	1							
4	4	1	U	3	7	3	100	P	S	0	1							
4	4	2	U	3	8	7	100	P	S	0	1							
4	4	3	U	3	8	9	100	P	S	0	1							
4	4	4	U	3	9	4	100	P	S	0	1							
4	4	5	U	3	9	5	100	P	S	0	1							
4	4	6	U	4	0	4	100	P	S	0	1							
4	4	7	U	4	0	9	100	P	S	0	1							
4	4	8	U	4	1	0	100	P	S	0	1							
4	4	9	U	4	1	1	100	P	S	0	1							
4	3	0																
4	3	1																
4	3	2																
4	3	3																
4	3	4																
4	3	5																
4	3	6																
4	3	7																
4	3	8																
4	3	9																
4	4	0																
4	4	1																
4	4	2																
4	4	3																
4	4	4																
4	4	5																
4	4	6																
4	4	7																
4	4	8																

9. Descriptions of Hazardous Wastes (Continued. Use the Additional Sheet(s) as necessary; number pages as 5 a, etc.)

Line Number		*A. EPA Hazardous Waste No. (Enter code)*				*B. Estimated Annual Quantity of Waste*	*C. Unit of Measure (Enter code)*	*D. PROCESSES*									
								(1) PROCESS CODES (Enter code)									*(2) PROCESS DESCRIPTION (If a code is not entered in D(1))*
Technical Area 54, Area L																	
	1	D	0	0	1	220,000	P	S	0	1							
	2	D	0	0	2	365,000	P	S	0	1							
	3	D	0	0	3	100,000	P	S	0	1							
	4	D	0	0	4	25,000	P	S	0	1							
	5	D	0	0	5	80,000	P	S	0	1							
	6	D	0	0	6	65,000	P	S	0	1							
	7	D	0	0	7	75,000	P	S	0	1							
	8	D	0	0	8	800,000	P	S	0	1							
	9	D	0	0	9	65,000	P	S	0	1							
1	0	D	0	1	0	30,000	P	S	0	1							
1	1	D	0	1	1	40,000	P	S	0	1							
1	2	D	0	1	2	12,000	P	S	0	1							
1	3	D	0	1	3	4,000	P	S	0	1							
1	4	D	0	1	4	4,000	P	S	0	1							
1	5	D	0	1	5	7,000	P	S	0	1							
1	6	D	0	1	6	4,000	P	S	0	1							
1	7	D	0	1	7	4,000	P	S	0	1							
1	8	D	0	1	8	20,000	P	S	0	1							
1	9	D	0	1	9	20,000	P	S	0	1							
2	0	D	0	2	0	30,000	P	S	0	1							
2	1	D	0	2	1	10,000	P	S	0	1							
2	2	D	0	2	2	23,000	P	S	0	1							
2	3	D	0	2	3	4,000	P	S	0	1							
2	4	D	0	2	4	4,000	P	S	0	1							
2	5	D	0	2	5	4,000	P	S	0	1							
2	6	D	0	2	6	4,000	P	S	0	1							
2	7	D	0	2	7	12,000	P	S	0	1							
2	8	D	0	2	8	30,000	P	S	0	1							
2	9	D	0	2	9	7,000	P	S	0	1							
3	0	D	0	3	0	20000	P	S	0	1							
3	1	D	0	3	1	12000	P	S	0	1							
3	2	D	0	3	2	19000	P	S	0	1							
3	3	D	0	3	3	19000	P	S	0	1							
3	4	D	0	3	4	19000	P	S	0	1							
3	5	D	0	3	5	20000	P	S	0	1							
3	6	D	0	3	6	9000	P	S	0	1							
3	7	D	0	3	7	7000	P	S	0	1							
3	8	D	0	3	8	4000	P	S	0	1							
3	9	D	0	3	9	10000	P	S	0	1							

9. Descriptions of Hazardous Wastes (Continued. Use the Additional Sheet(s) as necessary; number pages as 5 a, etc.)

Line Number	*A. EPA Hazardous Waste No. (Enter code)*					*B. Estimated Annual Quantity of Waste*	*C. Unit of Measure (Enter code)*	*D. PROCESSES*									
								(1) PROCESS CODES (Enter code)									*(2) PROCESS DESCRIPTION (If a code is not entered in D(1))*
Technical Area 54, Area L (Continued)																	
4	0	D	0	4	0	15000	P	S	0	1							
4	1	D	0	4	1	7000	P	S	0	1							
4	2	D	0	4	2	12000	P	S	0	1							
4	3	D	0	4	3	15000	P	S	0	1							
4	4	F	0	0	1	660000	P	S	0	1							
4	5	F	0	0	2	350000	P	S	0	1							
4	6	F	0	0	3	250000	P	S	0	1							
4	7	F	0	0	4	30000	P	S	0	1							
4	8	F	0	0	5	250000	P	S	0	1							
4	9	F	0	0	6	7000	P	S	0	1							
5	0	F	0	0	7	28000	P	S	0	1							
5	1	F	0	0	8	7000	P	S	0	1							
5	2	F	0	0	9	8000	P	S	0	1							
5	3	F	0	1	0	4000	P	S	0	1							
5	4	F	0	1	1	4000	P	S	0	1							
5	5	F	0	1	2	4000	P	S	0	1							
5	6	F	0	1	9	500	P	S	0	1							
5	7	F	0	2	0	500	P	S	0	1							
5	8	F	0	2	1	500	P	S	0	1							
5	9	F	0	2	2	500	P	S	0	1							
6	0	F	0	2	3	500	P	S	0	1							
6	1	F	0	2	4	500	P	S	0	1							
6	2	F	0	2	5	500	P	S	0	1							
6	3	F	0	2	6	500	P	S	0	1							
6	4	F	0	2	7	4000	P	S	0	1							
6	5	F	0	2	8	4000	P	S	0	1							
6	6	F	0	3	2	500	P	S	0	1							
6	7	F	0	3	4	500	P	S	0	1							
6	8	F	0	3	5	500	P	S	0	1							
6	9	F	0	3	7	500	P	S	0	1							
7	0	F	0	3	8	500	P	S	0	1							
7	1	F	0	3	9	4000	P	S	0	1							
7	2	K	0	4	4	22000	P	S	0	1							
7	3	K	0	4	5	4000	P	S	0	1							
7	4	K	0	4	6	4000	P	S	0	1							
7	5	K	0	4	7	4000	P	S	0	1							
7	6	K	0	8	4	500	P	S	0	1							
7	7	K	1	0	1	500	P	S	0	1							
7	8	K	1	0	2	500	P	S	0	1							

9. Descriptions of Hazardous Wastes (Continued. Use the Additional Sheet(s) as necessary; number pages as 5 a, etc.)

Line Number			A. EPA Hazardous Waste No. (Enter code)				B. Estimated Annual Quantity of Waste	C. Unit of Measure (Enter code)	D. PROCESSES (1) PROCESS CODES (Enter code)									(2) PROCESS DESCRIPTION (If a code is not entered in D(1))
Technical Area 54, Area L (Continued)																		
	7	9	P	0	0	1	4,000	P	S	0	1							
	8	0	P	0	0	2	4,000	P	S	0	1							
	8	1	P	0	0	3	4,000	P	S	0	1							
	8	2	P	0	0	4	4,000	P	S	0	1							
	8	3	P	0	0	5	4,000	P	S	0	1							
	8	4	P	0	0	6	4,000	P	S	0	1							
	8	5	P	0	0	7	4,000	P	S	0	1							
	8	6	P	0	0	8	4,000	P	S	0	1							
	8	7	P	0	0	9	4,000	P	S	0	1							
	8	8	P	0	1	0	4,000	P	S	0	1							
	8	9	P	0	1	1	4,000	P	S	0	1							
	9	0	P	0	1	2	4,000	P	S	0	1							
	9	1	P	0	1	3	4,000	P	S	0	1							
	9	2	P	0	1	4	4,000	P	S	0	1							
	9	3	P	0	1	5	4,000	P	S	0	1							
	9	4	P	0	1	6	4,000	P	S	0	1							
	9	5	P	0	1	7	4,000	P	S	0	1							
	9	6	P	0	1	8	4,000	P	S	0	1							
	9	7	P	0	2	0	4,000	P	S	0	1							
	9	8	P	0	2	1	4,000	P	S	0	1							
	9	9	P	0	2	2	4,000	P	S	0	1							
1	0	0	P	0	2	3	4,000	P	S	0	1							
1	0	1	P	0	2	4	4,000	P	S	0	1							
1	0	2	P	0	2	6	4,000	P	S	0	1							
1	0	3	P	0	2	7	4,000	P	S	0	1							
1	0	4	P	0	2	8	4,000	P	S	0	1							
1	0	5	P	0	2	9	4,000	P	S	0	1							
1	0	6	P	0	3	0	4,000	P	S	0	1							
1	0	7	P	0	3	1	4,000	P	S	0	1							
1	0	8	P	0	3	3	4,000	P	S	0	1							
1	0	9	P	0	3	4	4,000	P	S	0	1							
1	1	0	P	0	3	6	4,000	P	S	0	1							
1	1	1	P	0	3	7	4,000	P	S	0	1							
1	1	2	P	0	3	8	4,000	P	S	0	1							
1	1	3	P	0	3	9	4,000	P	S	0	1							
1	1	4	P	0	4	0	4,000	P	S	0	1							
1	1	5	P	0	4	1	4,000	P	S	0	1							
1	1	6	P	0	4	2	4,000	P	S	0	1							
1	1	7	P	0	4	3	4,000	P	S	0	1							

9. Descriptions of Hazardous Wastes (Continued. Use the Additional Sheet(s) as necessary; number pages as 5 a, etc.)

Line Number	A. EPA Hazardous Waste No. (Enter code)	B. Estimated Annual Quantity of Waste	C. Unit of Measure (Enter code)	D. PROCESSES (1) PROCESS CODES (Enter code)								D. PROCESSES (2) PROCESS DESCRIPTION (If a code is not entered in D(1))
Technical Area 54, Area L (Continued)												
1 1 8	P 0 4 4	4,000	P	S 0 1								
1 1 9	P 0 4 5	4,000	P	S 0 1								
1 2 0	P 0 4 6	4,000	P	S 0 1								
1 2 1	P 0 4 7	4,000	P	S 0 1								
1 2 2	P 0 4 8	4,000	P	S 0 1								
1 2 3	P 0 4 9	4,000	P	S 0 1								
1 2 4	P 0 5 0	4,000	P	S 0 1								
1 2 5	P 0 5 1	4,000	P	S 0 1								
1 2 6	P 0 5 4	4,000	P	S 0 1								
1 2 7	P 0 5 6	4,000	P	S 0 1								
1 2 8	P 0 5 7	4,000	P	S 0 1								
1 2 9	P 0 5 8	4,000	P	S 0 1								
1 3 0	P 0 5 9	4,000	P	S 0 1								
1 3 1	P 0 6 0	4,000	P	S 0 1								
1 3 2	P 0 6 2	4,000	P	S 0 1								
1 3 3	P 0 6 3	4,000	P	S 0 1								
1 3 4	P 0 6 4	4,000	P	S 0 1								
1 3 5	P 0 6 5	4,000	P	S 0 1								
1 3 6	P 0 6 6	4,000	P	S 0 1								
1 3 7	P 0 6 7	4,000	P	S 0 1								
1 3 8	P 0 6 8	4,000	P	S 0 1								
1 3 9	P 0 6 9	4,000	P	S 0 1								
1 4 0	P 0 7 0	4,000	P	S 0 1								
1 4 1	P 0 7 1	4,000	P	S 0 1								
1 4 2	P 0 7 2	4,000	P	S 0 1								
1 4 3	P 0 7 3	4,000	P	S 0 1								
1 4 4	P 0 7 4	4,000	P	S 0 1								
1 4 5	P 0 7 5	4,000	P	S 0 1								
1 4 6	P 0 7 6	4,000	P	S 0 1								
1 4 7	P 0 7 7	4,000	P	S 0 1								
1 4 8	P 0 7 8	4,000	P	S 0 1								
1 4 9	P 0 8 1	4,000	P	S 0 1								
1 5 0	P 0 8 2	4,000	P	S 0 1								
1 5 1	P 0 8 4	4,000	P	S 0 1								
1 5 2	P 0 8 5	4,000	P	S 0 1								
1 5 3	P 0 8 7	4,000	P	S 0 1								
1 5 4	P 0 8 8	4,000	P	S 0 1								
1 5 5	P 0 8 9	4,000	P	S 0 1								
1 5 6	P 0 9 2	4,000	P	S 0 1								

9. Descriptions of Hazardous Wastes (Continued. Use the Additional Sheet(s) as necessary; number pages as 5 a, etc.)

Line Number	A. EPA Hazardous Waste No. (Enter code)	B. Estimated Annual Quantity of Waste	C. Unit of Measure (Enter code)	D. PROCESSES (1) PROCESS CODES (Enter code)									D. PROCESSES (2) PROCESS DESCRIPTION (If a code is not entered in D(1))
Technical Area 54, Area L (Continued)													
1 5 7	P 0 9 3	4,000	P	S 0 1									
1 5 8	P 0 9 4	4,000	P	S 0 1									
1 5 9	P 0 9 5	4,000	P	S 0 1									
1 6 0	P 0 9 6	4,000	P	S 0 1									
1 6 1	P 0 9 7	4,000	P	S 0 1									
1 6 2	P 0 9 8	4,000	P	S 0 1									
1 6 3	P 0 9 9	4,000	P	S 0 1									
1 6 4	P 1 0 1	4,000	P	S 0 1									
1 6 5	P 1 0 2	4,000	P	S 0 1									
1 6 6	P 1 0 3	4,000	P	S 0 1									
1 6 7	P 1 0 4	4,000	P	S 0 1									
1 6 8	P 1 0 5	4,000	P	S 0 1									
1 6 9	P 1 0 6	4,000	P	S 0 1									
1 7 0	P 1 0 8	4,000	P	S 0 1									
1 7 1	P 1 0 9	4,000	P	S 0 1									
1 7 2	P 1 1 0	4,000	P	S 0 1									
1 7 3	P 1 1 1	4,000	P	S 0 1									
1 7 4	P 1 1 2	4,000	P	S 0 1									
1 7 5	P 1 1 3	4,000	P	S 0 1									
1 7 6	P 1 1 4	4,000	P	S 0 1									
1 7 7	P 1 1 5	4,000	P	S 0 1									
1 7 8	P 1 1 6	4,000	P	S 0 1									
1 7 9	P 1 1 8	4,000	P	S 0 1									
1 8 0	P 1 1 9	4,000	P	S 0 1									
1 8 1	P 1 2 0	4,000	P	S 0 1									
1 8 2	P 1 2 1	4,000	P	S 0 1									
1 8 3	P 1 2 2	4,000	P	S 0 1									
1 8 4	P 1 2 3	4,000	P	S 0 1									
1 8 5	P 1 2 7	4,000	P	S 0 1									
1 8 6	P 1 2 8	4,000	P	S 0 1									
1 8 7	P 1 8 5	4,000	P	S 0 1									
1 8 8	P 1 8 8	4,000	P	S 0 1									
1 8 9	P 1 8 9	4,000	P	S 0 1									
1 9 0	P 1 9 0	4,000	P	S 0 1									
1 9 1	P 1 9 1	4,000	P	S 0 1									
1 9 2	P 1 9 2	4,000	P	S 0 1									
1 9 3	P 1 9 4	4,000	P	S 0 1									
1 9 4	P 1 9 6	4,000	P	S 0 1									
1 9 5	P 1 9 7	4,000	P	S 0 1									

9. Descriptions of Hazardous Wastes (Continued. Use the Additional Sheet(s) as necessary; number pages as 5 a, etc.)

Line Number	A. EPA Hazardous Waste No. (Enter code)	B. Estimated Annual Quantity of Waste	C. Unit of Measure (Enter code)	D. PROCESSES (1) PROCESS CODES (Enter code)									D. PROCESSES (2) PROCESS DESCRIPTION (If a code is not entered in D(1))
Technical Area 54, Area L (Continued)													
196	P198	4,000	P	S01									
197	P199	4,000	P	S01									
198	P201	4,000	P	S01									
199	P202	4,000	P	S01									
200	P203	4,000	P	S01									
201	P204	4,000	P	S01									
202	P205	4,000	P	S01									
203	U001	4,000	P	S01									
204	U002	4,000	P	S01									
205	U003	4,000	P	S01									
206	U004	4,000	P	S01									
207	U005	4,000	P	S01									
208	U006	4,000	P	S01									
209	U007	4,000	P	S01									
210	U008	4,000	P	S01									
211	U009	4,000	P	S01									
212	U010	4,000	P	S01									
213	U011	4,000	P	S01									
214	U012	4,000	P	S01									
215	U013	4,000	P	S01									
216	U014	4,000	P	S01									
217	U015	4,000	P	S01									
218	U016	4,000	P	S01									
219	U017	4,000	P	S01									
220	U018	4,000	P	S01									
221	U019	4,000	P	S01									
222	U020	4,000	P	S01									
223	U021	4,000	P	S01									
224	U022	4,000	P	S01									
225	U023	4,000	P	S01									
226	U024	4,000	P	S01									
227	U025	4,000	P	S01									
228	U026	4,000	P	S01									
229	U027	4,000	P	S01									
230	U028	4,000	P	S01									
231	U029	4,000	P	S01									
232	U030	4,000	P	S01									
233	U031	4,000	P	S01									
234	U032	4,000	P	S01									

9. Descriptions of Hazardous Wastes (Continued. Use the Additional Sheet(s) as necessary; number pages as 5 a, etc.)

Line Number	A. EPA Hazardous Waste No. (Enter code)	B. Estimated Annual Quantity of Waste	C. Unit of Measure (Enter code)	D. PROCESSES (1) PROCESS CODES (Enter code)											D. PROCESSES (2) PROCESS DESCRIPTION (If a code is not entered in D(1))
Technical Area 54, Area L (Continued)															
2 3 5	U 0 3 4	4,000	P	S	0	1									
2 3 6	U 0 3 5	4,000	P	S	0	1									
2 3 7	U 0 3 6	4,000	P	S	0	1									
2 3 8	U 0 3 7	4,000	P	S	0	1									
2 3 9	U 0 3 8	4,000	P	S	0	1									
2 4 0	U 0 3 9	4,000	P	S	0	1									
2 4 1	U 0 4 1	4,000	P	S	0	1									
2 4 2	U 0 4 2	4,000	P	S	0	1									
2 4 3	U 0 4 3	4,000	P	S	0	1									
2 4 4	U 0 4 4	4,000	P	S	0	1									
2 4 5	U 0 4 5	4,000	P	S	0	1									
2 4 6	U 0 4 6	4,000	P	S	0	1									
2 4 7	U 0 4 7	4,000	P	S	0	1									
2 4 8	U 0 4 8	4,000	P	S	0	1									
2 4 9	U 0 4 9	4,000	P	S	0	1									
2 5 0	U 0 5 0	4,000	P	S	0	1									
2 5 1	U 0 5 1	4,000	P	S	0	1									
2 5 2	U 0 5 2	4,000	P	S	0	1									
2 5 3	U 0 5 3	4,000	P	S	0	1									
2 5 4	U 0 5 5	4,000	P	S	0	1									
2 5 5	U 0 5 6	4,000	P	S	0	1									
2 5 6	U 0 5 7	4,000	P	S	0	1									
2 5 7	U 0 5 8	4,000	P	S	0	1									
2 5 8	U 0 5 9	4,000	P	S	0	1									
2 5 9	U 0 6 0	4,000	P	S	0	1									
2 6 0	U 0 6 1	4,000	P	S	0	1									
2 6 1	U 0 6 2	4,000	P	S	0	1									
2 6 2	U 0 6 3	4,000	P	S	0	1									
2 6 3	U 0 6 4	4,000	P	S	0	1									
2 6 4	U 0 6 6	4,000	P	S	0	1									
2 6 5	U 0 6 7	4,000	P	S	0	1									
2 6 6	U 0 6 8	4,000	P	S	0	1									
2 6 7	U 0 6 9	4,000	P	S	0	1									
2 6 8	U 0 7 0	4,000	P	S	0	1									
2 6 9	U 0 7 1	4,000	P	S	0	1									
2 7 0	U 0 7 2	4,000	P	S	0	1									
2 7 1	U 0 7 3	4,000	P	S	0	1									
2 7 2	U 0 7 4	4,000	P	S	0	1									
2 7 3	U 0 7 5	4,000	P	S	0	1									

9. Descriptions of Hazardous Wastes (Continued. Use the Additional Sheet(s) as necessary; number pages as 5 a, etc.)

Line Number	A. EPA Hazardous Waste No. (Enter code)	B. Estimated Annual Quantity of Waste	C. Unit of Measure (Enter code)	D. PROCESSES (1) PROCESS CODES (Enter code)									D. PROCESSES (2) PROCESS DESCRIPTION (If a code is not entered in D(1))
Technical Area 54, Area L (Continued)													
2 7 4	U 0 7 6	4,000	P	S	0	1							
2 7 5	U 0 7 7	4,000	P	S	0	1							
2 7 6	U 0 7 8	4,000	P	S	0	1							
2 7 7	U 0 7 9	4,000	P	S	0	1							
2 7 8	U 0 8 0	4,000	P	S	0	1							
2 7 9	U 0 8 1	4,000	P	S	0	1							
2 8 0	U 0 8 2	4,000	P	S	0	1							
2 8 1	U 0 8 3	4,000	P	S	0	1							
2 8 2	U 0 8 4	4,000	P	S	0	1							
2 8 3	U 0 8 5	4,000	P	S	0	1							
2 8 4	U 0 8 6	4,000	P	S	0	1							
2 8 5	U 0 8 7	4,000	P	S	0	1							
2 8 6	U 0 8 8	4,000	P	S	0	1							
2 8 7	U 0 8 9	4,000	P	S	0	1							
2 8 8	U 0 9 0	4,000	P	S	0	1							
2 8 9	U 0 9 1	4,000	P	S	0	1							
2 9 0	U 0 9 2	4,000	P	S	0	1							
2 9 1	U 0 9 3	4,000	P	S	0	1							
2 9 2	U 0 9 4	4,000	P	S	0	1							
2 9 3	U 0 9 5	4,000	P	S	0	1							
2 9 4	U 0 9 6	4,000	P	S	0	1							
2 9 5	U 0 9 7	4,000	P	S	0	1							
2 9 6	U 0 9 8	4,000	P	S	0	1							
2 9 7	U 0 9 9	4,000	P	S	0	1							
2 9 8	U 1 0 1	4,000	P	S	0	1							
2 9 9	U 1 0 2	4,000	P	S	0	1							
3 0 0	U 1 0 3	4,000	P	S	0	1							
3 0 1	U 1 0 5	4,000	P	S	0	1							
3 0 2	U 1 0 6	4,000	P	S	0	1							
3 0 3	U 1 0 7	4,000	P	S	0	1							
3 0 4	U 1 0 8	4,000	P	S	0	1							
3 0 5	U 1 0 9	4,000	P	S	0	1							
3 0 6	U 1 1 0	4,000	P	S	0	1							
3 0 7	U 1 1 1	4,000	P	S	0	1							
3 0 8	U 1 1 2	4,000	P	S	0	1							
3 0 9	U 1 1 3	4,000	P	S	0	1							
3 1 0	U 1 1 4	4,000	P	S	0	1							
3 1 1	U 1 1 5	4,000	P	S	0	1							
3 1 2	U 1 1 6	4,000	P	S	0	1							

9. Descriptions of Hazardous Wastes (Continued. Use the Additional Sheet(s) as necessary; number pages as 5 a, etc.)

Line Number	A. EPA Hazardous Waste No. (Enter code)	B. Estimated Annual Quantity of Waste	C. Unit of Measure (Enter code)	D. PROCESSES (1) PROCESS CODES (Enter code)											D. PROCESSES (2) PROCESS DESCRIPTION (If a code is not entered in D(1))
Technical Area 54, Area L (Continued)															
3 1 3	U 1 1 7	4,000	P	S	0	1									
3 1 4	U 1 1 8	4,000	P	S	0	1									
3 1 5	U 1 1 9	4,000	P	S	0	1									
3 1 6	U 1 2 0	4,000	P	S	0	1									
3 1 7	U 1 2 1	4,000	P	S	0	1									
3 1 8	U 1 2 2	4,000	P	S	0	1									
3 1 9	U 1 2 3	4,000	P	S	0	1									
3 2 0	U 1 2 4	4,000	P	S	0	1									
3 2 1	U 1 2 5	4,000	P	S	0	1									
3 2 2	U 1 2 6	4,000	P	S	0	1									
3 2 3	U 1 2 7	4,000	P	S	0	1									
3 2 4	U 1 2 8	4,000	P	S	0	1									
3 2 5	U 1 2 9	4,000	P	S	0	1									
3 2 6	U 1 3 0	4,000	P	S	0	1									
3 2 7	U 1 3 1	4,000	P	S	0	1									
3 2 8	U 1 3 2	4,000	P	S	0	1									
3 2 9	U 1 3 3	4,000	P	S	0	1									
3 3 0	U 1 3 4	4,000	P	S	0	1									
3 3 1	U 1 3 5	4,000	P	S	0	1									
3 3 2	U 1 3 6	4,000	P	S	0	1									
3 3 3	U 1 3 7	4,000	P	S	0	1									
3 3 4	U 1 3 8	4,000	P	S	0	1									
3 3 5	U 1 4 0	4,000	P	S	0	1									
3 3 6	U 1 4 1	4,000	P	S	0	1									
3 3 7	U 1 4 2	4,000	P	S	0	1									
3 3 8	U 1 4 3	4,000	P	S	0	1									
3 3 9	U 1 4 4	4,000	P	S	0	1									
3 4 0	U 1 4 5	4,000	P	S	0	1									
3 4 1	U 1 4 6	4,000	P	S	0	1									
3 4 2	U 1 4 7	4,000	P	S	0	1									
3 4 3	U 1 4 8	4,000	P	S	0	1									
3 4 4	U 1 4 9	4,000	P	S	0	1									
3 4 5	U 1 5 0	4,000	P	S	0	1									
3 4 6	U 1 5 1	4,000	P	S	0	1									
3 4 7	U 1 5 2	4,000	P	S	0	1									
3 4 8	U 1 5 3	4,000	P	S	0	1									
3 4 9	U 1 5 4	4,000	P	S	0	1									
3 5 0	U 1 5 5	4,000	P	S	0	1									
3 5 1	U 1 5 6	4,000	P	S	0	1									

9. Descriptions of Hazardous Wastes (Continued. Use the Additional Sheet(s) as necessary; number pages as 5 a, etc.)

Line Number	A. EPA Hazardous Waste No. (Enter code)	B. Estimated Annual Quantity of Waste	C. Unit of Measure (Enter code)	D. PROCESSES (1) PROCESS CODES (Enter code)									D. PROCESSES (2) PROCESS DESCRIPTION (If a code is not entered in D(1))
Technical Area 54, Area L (Continued)													
3 5 4	U 1 5 7	4,000	P	S 0 1									
3 5 5	U 1 5 8	4,000	P	S 0 1									
3 5 6	U 1 5 9	4,000	P	S 0 1									
3 5 7	U 1 6 0	4,000	P	S 0 1									
3 5 8	U 1 6 1	4,000	P	S 0 1									
3 5 9	U 1 6 2	4,000	P	S 0 1									
3 6 0	U 1 6 3	4,000	P	S 0 1									
3 6 1	U 1 6 4	4,000	P	S 0 1									
3 6 2	U 1 6 5	4,000	P	S 0 1									
3 6 3	U 1 6 6	4,000	P	S 0 1									
3 6 4	U 1 6 7	4,000	P	S 0 1									
3 6 5	U 1 6 8	4,000	P	S 0 1									
3 6 6	U 1 6 9	4,000	P	S 0 1									
3 6 7	U 1 7 0	4,000	P	S 0 1									
3 6 8	U 1 7 1	4,000	P	S 0 1									
3 6 9	U 1 7 2	4,000	P	S 0 1									
3 7 0	U 1 7 3	4,000	P	S 0 1									
3 7 1	U 1 7 4	4,000	P	S 0 1									
3 7 2	U 1 7 6	4,000	P	S 0 1									
3 7 3	U 1 7 7	4,000	P	S 0 1									
3 7 4	U 1 7 8	4,000	P	S 0 1									
3 7 5	U 1 7 9	4,000	P	S 0 1									
3 7 6	U 1 8 0	4,000	P	S 0 1									
3 7 7	U 1 8 1	4,000	P	S 0 1									
3 7 8	U 1 8 2	4,000	P	S 0 1									
3 7 9	U 1 8 3	4,000	P	S 0 1									
3 8 0	U 1 8 4	4,000	P	S 0 1									
3 8 1	U 1 8 5	4,000	P	S 0 1									
3 8 2	U 1 8 6	4,000	P	S 0 1									
3 8 3	U 1 8 7	4,000	P	S 0 1									
3 8 4	U 1 8 8	4,000	P	S 0 1									
3 8 5	U 1 8 9	4,000	P	S 0 1									
3 8 6	U 1 9 0	4,000	P	S 0 1									
3 8 7	U 1 9 1	4,000	P	S 0 1									
3 8 8	U 1 9 2	4,000	P	S 0 1									
3 8 9	U 1 9 3	4,000	P	S 0 1									
3 9 0	U 1 9 4	4,000	P	S 0 1									
3 5 4	U 1 9 6	4,000	P	S 0 1									
3 5 5	U 1 9 7	4,000	P	S 0 1									

9. Descriptions of Hazardous Wastes (Continued. Use the Additional Sheet(s) as necessary; number pages as 5 a, etc.)

Line Number	A. EPA Hazardous Waste No. (Enter code)	B. Estimated Annual Quantity of Waste	C. Unit of Measure (Enter code)	D. PROCESSES (1) PROCESS CODES (Enter code)											D. PROCESSES (2) PROCESS DESCRIPTION (If a code is not entered in D(1))
Technical Area 54, Area L (Continued)															
3 9 1	U 2 0 0	4,000	P	S 0 1											
3 9 2	U 2 0 1	4,000	P	S 0 1											
3 9 3	U 2 0 2	4,000	P	S 0 1											
3 9 4	U 2 0 3	4,000	P	S 0 1											
3 9 5	U 2 0 4	4,000	P	S 0 1											
3 9 6	U 2 0 5	4,000	P	S 0 1											
3 9 7	U 2 0 6	4,000	P	S 0 1											
3 9 8	U 2 0 7	4,000	P	S 0 1											
3 9 9	U 2 0 8	4,000	P	S 0 1											
4 0 0	U 2 0 9	4,000	P	S 0 1											
4 0 1	U 2 1 0	4,000	P	S 0 1											
4 0 2	U 2 1 1	4,000	P	S 0 1											
4 0 3	U 2 1 3	4,000	P	S 0 1											
4 0 4	U 2 1 4	4,000	P	S 0 1											
4 0 5	U 2 1 5	4,000	P	S 0 1											
4 0 6	U 2 1 6	4,000	P	S 0 1											
4 0 7	U 2 1 7	4,000	P	S 0 1											
4 0 8	U 2 1 8	4,000	P	S 0 1											
4 0 9	U 2 1 9	4,000	P	S 0 1											
4 1 0	U 2 2 0	7,000	P	S 0 1											
4 1 1	U 2 0 0	4,000	P	S 0 1											
4 1 2	U 2 0 1	4,000	P	S 0 1											
4 1 3	U 2 0 2	4,000	P	S 0 1											
4 1 4	U 2 0 3	4,000	P	S 0 1											
4 1 5	U 2 0 4	7,000	P	S 0 1											
4 1 6	U 2 0 5	4,000	P	S 0 1											
4 1 7	U 2 0 6	7,000	P	S 0 1											
4 1 8	U 2 0 7	4,000	P	S 0 1											
4 1 9	U 2 0 8	4,000	P	S 0 1											
4 2 0	U 2 0 9	4,000	P	S 0 1											
4 2 1	U 2 1 0	4,000	P	S 0 1											
4 2 2	U 2 1 1	4,000	P	S 0 1											
4 2 3	U 2 1 3	7,000	P	S 0 1											
4 2 4	U 2 1 4	4,000	P	S 0 1											
4 2 5	U 2 1 5	4,000	P	S 0 1											
4 2 6	U 2 1 6	4,000	P	S 0 1											
4 2 7	U 2 1 7	4,000	P	S 0 1											
4 2 8	U 2 1 8	4,000	P	S 0 1											
4 2 9	U 2 1 9	4,000	P	S 0 1											

9. Descriptions of Hazardous Wastes (Continued. Use the Additional Sheet(s) as necessary; number pages as 5 a, etc.)

Line Number	A. EPA Hazardous Waste No. (Enter code)	B. Estimated Annual Quantity of Waste	C. Unit of Measure (Enter code)	D. PROCESSES (1) PROCESS CODES (Enter code)									D. PROCESSES (2) PROCESS DESCRIPTION (If a code is not entered in D(1))
Technical Area 54, Area L (Continued)													
430	U247	4,000	P	S	0	1							
431	U271	4,000	P	S	0	1							
432	U278	4,000	P	S	0	1							
433	U279	4,000	P	S	0	1							
434	U280	4,000	P	S	0	1							
435	U328	4,000	P	S	0	1							
436	U353	4,000	P	S	0	1							
437	U359	4,000	P	S	0	1							
438	U364	4,000	P	S	0	1							
439	U367	4,000	P	S	0	1							
440	U372	4,000	P	S	0	1							
441	U373	4,000	P	S	0	1							
442	U387	4,000	P	S	0	1							
443	U389	4,000	P	S	0	1							
444	U394	4,000	P	S	0	1							
445	U395	4,000	P	S	0	1							
446	U404	4,000	P	S	0	1							
447	U409	4,000	P	S	0	1							
448	U410	4,000	P	S	0	1							
449	U411	4,000	P	S	0	1							

9. Descriptions of Hazardous Wastes (Continued. Use the Additional Sheet(s) as necessary; number pages as 5 a, etc.)

Line Number		A. EPA Hazardous Waste No. (Enter code)				B. Estimated Annual Quantity of Waste	C. Unit of Measure (Enter code)	D. PROCESSES (1) PROCESS CODES (Enter code)									(2) PROCESS DESCRIPTION (If a code is not entered in D(1))
Technical Area 54, Material Disposal Area L (Impoundments B and D/Shafts 1, 13-17, and 19-34)[a,b]																	
	1	D	0	0	1	82,000	P	D	8	0							
	2	D	0	0	2	17,200	P	D	8	0							
	3	D	0	0	3	750	P	D	8	0							
	4	D	0	0	4	1,700	P	D	8	0							
	5	D	0	0	6	650	P	D	8	0							
	6	D	0	0	7	1,000	P	D	8	0							
	7	D	0	0	8	1,250	P	D	8	0							
	8	D	0	0	9	2,200	P	D	8	0							
	9	D	0	1	1	100	P	D	8	0							
1	0	D	0	1	6	600	P	D	8	0							
1	1	F	0	0	2	1,400	P	D	8	0							
1	2	P	0	1	5	4,000	P	D	8	0							
1	3	P	0	8	7	15	P	D	8	0							
1	4	U	0	0	2	5,000	P	D	8	0							
1	5	U	0	1	9	200	P	D	8	0							
1	6	U	0	6	9	500	P	D	8	0							
1	7	U	0	8	0	2,000	P	D	8	0							
1	8	U	1	2	2	550	P	D	8	0							
1	9	U	1	5	1	35	P	D	8	0							
2	0	U	1	5	4	550	P	D	8	0							
2	1	U	1	5	9	300	P	D	8	0							
2	2	U	1	6	1	500	P	D	8	0							
2	3	U	1	6	5	140	P	D	8	0							
2	4	U	2	2	0	620	P	D	8	0							
2	5	U	2	2	6	10,000	P	D	8	0							
2	6	U	2	2	8	4,400	P	D	8	0							
2	7	U	2	3	9	345	P	D	8	0							
2	8																
2	9																
3	0																
3	1																
3	2																
3	3																
3	4																
3	5																
3	6																
3	7																
3	8																
3	9																

[a] Based on historical data from waste operations personnel.

[b] To be closed in accordance with Code of Federal Regulations (CFR), Title 40, Part 265, Subpart G. Permitted status is not requested.

9. Descriptions of Hazardous Wastes (Continued. Use the Additional Sheet(s) as necessary; number pages as 5 a, etc.)

Line Number		*A. EPA Hazardous Waste No. (Enter code)*				*B. Estimated Annual Quantity of Waste*	*C. Unit of Measure (Enter code)*	*D. PROCESSES*									
								(1) PROCESS CODES (Enter code)									*(2) PROCESS DESCRIPTION (If a code is not entered in D(1))*
Technical Area 54, Area G																	
	1	D	0	0	1	330,000	P	S	0	1							
	2	D	0	0	2	395,000	P	S	0	1							
	3	D	0	0	3	185,000	P	S	0	1							
	4	D	0	0	4	2,525,000	P	S	0	1							
	5	D	0	0	5	82,000	P	S	0	1							
	6	D	0	0	6	515,000	P	S	0	1							
	7	D	0	0	7	3,775,000	P	S	0	1							
	8	D	0	0	8	5,400,000	P	S	0	1							
	9	D	0	0	9	100,000	P	S	0	1							
1	0	D	0	1	0	45,000	P	S	0	1							
1	1	D	0	1	1	2,540,000	P	S	0	1							
1	2	D	0	1	2	18,000	P	S	0	1							
1	3	D	0	1	3	4,000	P	S	0	1							
1	4	D	0	1	4	4,000	P	S	0	1							
1	5	D	0	1	5	7,000	P	S	0	1							
1	6	D	0	1	6	4,000	P	S	0	1							
1	7	D	0	1	7	4,000	P	S	0	1							
1	8	D	0	1	8	30,000	P	S	0	1							
1	9	D	0	1	9	25,000	P	S	0	1							
2	0	D	0	2	0	30,000	P	S	0	1							
2	1	D	0	2	1	15,000	P	S	0	1							
2	2	D	0	2	2	33,000	P	S	0	1							
2	3	D	0	2	3	4,000	P	S	0	1							
2	4	D	0	2	4	4,000	P	S	0	1							
2	5	D	0	2	5	4,000	P	S	0	1							
2	6	D	0	2	6	4,000	P	S	0	1							
2	7	D	0	2	7	22,000	P	S	0	1							
2	8	D	0	2	8	40,000	P	S	0	1							
2	9	D	0	2	9	7,000	P	S	0	1							
3	0	D	0	3	0	30,000	P	S	0	1							
3	1	D	0	3	1	22,000	P	S	0	1							
3	2	D	0	3	2	29,000	P	S	0	1							
3	3	D	0	3	3	29,000	P	S	0	1							
3	4	D	0	3	4	29,000	P	S	0	1							
3	5	D	0	3	5	30,000	P	S	0	1							
3	6	D	0	3	6	19,000	P	S	0	1							
3	7	D	0	3	7	7,000	P	S	0	1							
3	8	D	0	3	8	14,000	P	S	0	1							
3	9	D	0	3	9	20,000	P	S	0	1							

9. Descriptions of Hazardous Wastes (Continued. Use the Additional Sheet(s) as necessary; number pages as 5 a, etc.)

Line Number	*A. EPA Hazardous Waste No. (Enter code)*	*B. Estimated Annual Quantity of Waste*	*C. Unit of Measure (Enter code)*	*D. PROCESSES*														
				(1) PROCESS CODES (Enter code)														*(2) PROCESS DESCRIPTION (If a code is not entered in D(1))*
Technical Area 54, Area G (Continued)																		
4 0	D 0 4 0	25,000	P	S	0	1												
4 1	D 0 4 1	17,000	P	S	0	1												
4 2	D 0 4 2	22,000	P	S	0	1												
4 3	D 0 4 3	25,000	P	S	0	1												
4 4	F 0 0 1	6,410,000	P	S	0	1												
4 5	F 0 0 2	3,450,000	P	S	0	1												
4 6	F 0 0 3	2,850,000	P	S	0	1												
4 7	F 0 0 4	35,000	P	S	0	1												
4 8	F 0 0 5	3,250,000	P	S	0	1												
4 9	F 0 0 6	7,000	P	S	0	1												
5 0	F 0 0 7	18,000	P	S	0	1												
5 1	F 0 0 8	7,000	P	S	0	1												
5 2	F 0 0 9	8,000	P	S	0	1												
5 3	F 0 1 0	4,000	P	S	0	1												
5 4	F 0 1 1	4,000	P	S	0	1												
5 5	F 0 1 2	4,000	P	S	0	1												
5 6	F 0 1 9	4,000	P	S	0	1												
5 7	F 0 2 0	4,000	P	S	0	1												
5 8	F 0 2 1	4,000	P	S	0	1												
5 9	F 0 2 2	4,000	P	S	0	1												
6 0	F 0 2 3	4,000	P	S	0	1												
6 1	F 0 2 4	4,000	P	S	0	1												
6 2	F 0 2 5	4,000	P	S	0	1												
6 3	F 0 2 6	4,000	P	S	0	1												
6 4	F 0 2 7	4,000	P	S	0	1												
6 5	F 0 2 8	4,000	P	S	0	1												
6 6	F 0 3 2	4,000	P	S	0	1												
6 7	F 0 3 4	4,000	P	S	0	1												
6 8	F 0 3 5	4,000	P	S	0	1												
6 9	F 0 3 7	4,000	P	S	0	1												
7 0	F 0 3 8	4,000	P	S	0	1												
7 1	F 0 3 9	4,000	P	S	0	1												
7 2	K 0 4 4	22,000	P	S	0	1												
7 3	K 0 4 5	4,000	P	S	0	1												
7 4	K 0 4 6	4,000	P	S	0	1												
7 5	K 0 4 7	4,000	P	S	0	1												
7 6	K 0 8 4	500	P	S	0	1												
7 7	K 1 0 1	500	P	S	0	1												
7 8	K 1 0 2	500	P	S	0	1												

9. Descriptions of Hazardous Wastes (Continued. Use the Additional Sheet(s) as necessary; number pages as 5 a, etc.)

Line Number	A. EPA Hazardous Waste No. (Enter code)						B. Estimated Annual Quantity of Waste	C. Unit of Measure (Enter code)	D. PROCESSES (1) PROCESS CODES (Enter code)									(2) PROCESS DESCRIPTION (If a code is not entered in D(1))
Technical Area 54, Area G (Continued)																		
	7	9	P	0	0	1	4000	P	S	0	1							
	8	0	P	0	0	2	4000	P	S	0	1							
	8	1	P	0	0	3	4100	P	S	0	1							
	8	2	P	0	0	4	4000	P	S	0	1							
	8	3	P	0	0	5	4000	P	S	0	1							
	8	4	P	0	0	6	4000	P	S	0	1							
	8	5	P	0	0	7	4000	P	S	0	1							
	8	6	P	0	0	8	4000	P	S	0	1							
	8	7	P	0	0	9	4000	P	S	0	1							
	8	8	P	0	1	0	4000	P	S	0	1							
	8	9	P	0	1	1	4000	P	S	0	1							
	9	0	P	0	1	2	4100	P	S	0	1							
	9	1	P	0	1	3	4000	P	S	0	1							
	9	2	P	0	1	4	4000	P	S	0	1							
	9	3	P	0	1	5	4100	P	S	0	1							
	9	4	P	0	1	6	4000	P	S	0	1							
	9	5	P	0	1	7	4000	P	S	0	1							
	9	6	P	0	1	8	4000	P	S	0	1							
	9	7	P	0	2	0	4000	P	S	0	1							
	9	8	P	0	2	1	4000	P	S	0	1							
	9	9	P	0	2	2	4000	P	S	0	1							
1	0	0	P	0	2	3	4000	P	S	0	1							
1	0	1	P	0	2	4	4000	P	S	0	1							
1	0	2	P	0	2	6	4000	P	S	0	1							
1	0	3	P	0	2	7	4000	P	S	0	1							
1	0	4	P	0	2	8	4000	P	S	0	1							
1	0	5	P	0	2	9	4100	P	S	0	1							
1	0	6	P	0	3	0	4100	P	S	0	1							
1	0	7	P	0	3	1	4100	P	S	0	1							
1	0	8	P	0	3	3	4000	P	S	0	1							
1	0	9	P	0	3	4	4000	P	S	0	1							
1	1	0	P	0	3	6	4000	P	S	0	1							
1	1	1	P	0	3	7	4000	P	S	0	1							
1	1	2	P	0	3	8	4100	P	S	0	1							
1	1	3	P	0	3	9	4000	P	S	0	1							
1	1	4	P	0	4	0	4000	P	S	0	1							
1	1	5	P	0	4	1	4000	P	S	0	1							
1	1	6	P	0	4	2	4000	P	S	0	1							
1	1	7	P	0	4	3	4000	P	S	0	1							

9. Descriptions of Hazardous Wastes (Continued. Use the Additional Sheet(s) as necessary; number pages as 5 a, etc.)

Line Number	A. EPA Hazardous Waste No. (Enter code)	B. Estimated Annual Quantity of Waste	C. Unit of Measure (Enter code)	D. PROCESSES (1) PROCESS CODES (Enter code)									D. PROCESSES (2) PROCESS DESCRIPTION (If a code is not entered in D(1))
Technical Area 54, Area G (Continued)													
1 1 8	P 0 4 4	4000	P	S	0	1							
1 1 9	P 0 4 5	4000	P	S	0	1							
1 2 0	P 0 4 6	4000	P	S	0	1							
1 2 1	P 0 4 7	4000	P	S	0	1							
1 2 2	P 0 4 8	4000	P	S	0	1							
1 2 3	P 0 4 9	4000	P	S	0	1							
1 2 4	P 0 5 0	4000	P	S	0	1							
1 2 5	P 0 5 1	4000	P	S	0	1							
1 2 6	P 0 5 4	4000	P	S	0	1							
1 2 7	P 0 5 6	4100	P	S	0	1							
1 2 8	P 0 5 7	4000	P	S	0	1							
1 2 9	P 0 5 8	4000	P	S	0	1							
1 3 0	P 0 5 9	4000	P	S	0	1							
1 3 1	P 0 6 0	4000	P	S	0	1							
1 3 2	P 0 6 2	4000	P	S	0	1							
1 3 3	P 0 6 3	4100	P	S	0	1							
1 3 4	P 0 6 4	4000	P	S	0	1							
1 3 5	P 0 6 5	4000	P	S	0	1							
1 3 6	P 0 6 6	4000	P	S	0	1							
1 3 7	P 0 6 7	4000	P	S	0	1							
1 3 8	P 0 6 8	4100	P	S	0	1							
1 3 9	P 0 6 9	4000	P	S	0	1							
1 4 0	P 0 7 0	4000	P	S	0	1							
1 4 1	P 0 7 1	4000	P	S	0	1							
1 4 2	P 0 7 2	4000	P	S	0	1							
1 4 3	P 0 7 3	4100	P	S	0	1							
1 4 4	P 0 7 4	4000	P	S	0	1							
1 4 5	P 0 7 5	4000	P	S	0	1							
1 4 6	P 0 7 6	4000	P	S	0	1							
1 4 7	P 0 7 7	4000	P	S	0	1							
1 4 8	P 0 7 8	4000	P	S	0	1							
1 4 9	P 0 8 1	4000	P	S	0	1							
1 5 0	P 0 8 2	4000	P	S	0	1							
1 5 1	P 0 8 4	4000	P	S	0	1							
1 5 2	P 0 8 5	4000	P	S	0	1							
1 5 3	P 0 8 7	4000	P	S	0	1							
1 5 4	P 0 8 8	4000	P	S	0	1							
1 5 5	P 0 8 9	4000	P	S	0	1							
1 5 6	P 0 9 2	4000	P	S	0	1							

9. Descriptions of Hazardous Wastes (Continued. Use the Additional Sheet(s) as necessary; number pages as 5 a, etc.)

Line Number	A. EPA Hazardous Waste No. (Enter code)	B. Estimated Annual Quantity of Waste	C. Unit of Measure (Enter code)	D. PROCESSES (1) PROCESS CODES (Enter code)									D. PROCESSES (2) PROCESS DESCRIPTION (If a code is not entered in D(1))
Technical Area 54, Area G (Continued)													
1 5 7	P 0 9 3	4,000	P	S 0 1									
1 5 8	P 0 9 4	4,000	P	S 0 1									
1 5 9	P 0 9 5	4,100	P	S 0 1									
1 6 0	P 0 9 6	4,100	P	S 0 1									
1 6 1	P 0 9 7	4,000	P	S 0 1									
1 6 2	P 0 9 8	4,100	P	S 0 1									
1 6 3	P 0 9 9	4,000	P	S 0 1									
1 6 4	P 1 0 1	4,000	P	S 0 1									
1 6 5	P 1 0 2	4,000	P	S 0 1									
1 6 6	P 1 0 3	4,000	P	S 0 1									
1 6 7	P 1 0 4	4,000	P	S 0 1									
1 6 8	P 1 0 5	4,000	P	S 0 1									
1 6 9	P 1 0 6	4,100	P	S 0 1									
1 7 0	P 1 0 8	4,000	P	S 0 1									
1 7 1	P 1 0 9	4,000	P	S 0 1									
1 7 2	P 1 1 0	4,000	P	S 0 1									
1 7 3	P 1 1 1	4,000	P	S 0 1									
1 7 4	P 1 1 2	4,000	P	S 0 1									
1 7 5	P 1 1 3	4,000	P	S 0 1									
1 7 6	P 1 1 4	4,000	P	S 0 1									
1 7 7	P 1 1 5	4,000	P	S 0 1									
1 7 8	P 1 1 6	4,000	P	S 0 1									
1 7 9	P 1 1 8	4,000	P	S 0 1									
1 8 0	P 1 1 9	4,000	P	S 0 1									
1 8 1	P 1 2 0	4,100	P	S 0 1									
1 8 2	P 1 2 1	4,000	P	S 0 1									
1 8 3	P 1 2 2	4,000	P	S 0 1									
1 8 4	P 1 2 3	4,000	P	S 0 1									
1 8 5	P 1 2 7	4,000	P	S 0 1									
1 8 6	P 1 2 8	4,000	P	S 0 1									
1 8 7	P 1 8 5	4,000	P	S 0 1									
1 8 8	P 1 8 8	4,000	P	S 0 1									
1 8 9	P 1 8 9	4,000	P	S 0 1									
1 9 0	P 1 9 0	4,000	P	S 0 1									
1 9 1	P 1 9 1	4,000	P	S 0 1									
1 9 2	P 1 9 2	4,000	P	S 0 1									
1 9 3	P 1 9 4	4,000	P	S 0 1									
1 9 4	P 1 9 6	4,000	P	S 0 1									
1 9 5	P 1 9 7	4,000	P	S 0 1									

9. Descriptions of Hazardous Wastes (Continued. Use the Additional Sheet(s) as necessary; number pages as 5 a, etc.)

Line Number	A. EPA Hazardous Waste No. (Enter code)	B. Estimated Annual Quantity of Waste	C. Unit of Measure (Enter code)	D. PROCESSES (1) PROCESS CODES (Enter code)									D. PROCESSES (2) PROCESS DESCRIPTION (If a code is not entered in D(1))
Technical Area 54, Area G (Continued)													
196	P198	4,000	P	S01									
197	P199	4,000	P	S01									
198	P201	4,000	P	S01									
199	P202	4,000	P	S01									
200	P203	4,000	P	S01									
201	P204	4,000	P	S01									
202	P205	4,000	P	S01									
203	U001	4,100	P	S01									
204	U002	7,100	P	S01									
205	U003	4,100	P	S01									
206	U004	4,000	P	S01									
207	U005	4,000	P	S01									
208	U006	4,000	P	S01									
209	U007	4,000	P	S01									
210	U008	4,000	P	S01									
211	U009	4,000	P	S01									
212	U010	4,000	P	S01									
213	U011	4,000	P	S01									
214	U012	4,100	P	S01									
215	U014	4,000	P	S01									
216	U015	4,000	P	S01									
217	U016	4,000	P	S01									
218	U017	4,000	P	S01									
219	U018	4,000	P	S01									
220	U019	4,100	P	S01									
221	U020	4,000	P	S01									
222	U021	4,000	P	S01									
223	U022	4,100	P	S01									
224	U023	4,000	P	S01									
225	U024	4,000	P	S01									
226	U025	4,000	P	S01									
227	U026	4,000	P	S01									
228	U027	4,000	P	S01									
229	U028	4,100	P	S01									
230	U029	4,000	P	S01									
231	U030	4,100	P	S01									
232	U031	4,000	P	S01									
233	U032	4,000	P	S01									

9. Descriptions of Hazardous Wastes (Continued. Use the Additional Sheet(s) as necessary; number pages as 5 a, etc.)

Line Number	A. EPA Hazardous Waste No. (Enter code)	B. Estimated Annual Quantity of Waste	C. Unit of Measure (Enter code)	D. PROCESSES (1) PROCESS CODES (Enter code)									D. PROCESSES (2) PROCESS DESCRIPTION (If a code is not entered in D(1))
Technical Area 54, Area G (Continued)													
2 3 5	U 0 3 4	4,000	P	S 0 1									
2 3 6	U 0 3 5	4,000	P	S 0 1									
2 3 7	U 0 3 6	4,000	P	S 0 1									
2 3 8	U 0 3 7	4,100	P	S 0 1									
2 3 9	U 0 3 8	4,000	P	S 0 1									
2 4 0	U 0 3 9	4,000	P	S 0 1									
2 4 1	U 0 4 1	4,000	P	S 0 1									
2 4 2	U 0 4 2	4,000	P	S 0 1									
2 4 3	U 0 4 3	4,000	P	S 0 1									
2 4 4	U 0 4 4	4,100	P	S 0 1									
2 4 5	U 0 4 5	4,100	P	S 0 1									
2 4 6	U 0 4 6	4,000	P	S 0 1									
2 4 7	U 0 4 7	4,000	P	S 0 1									
2 4 8	U 0 4 8	4,000	P	S 0 1									
2 4 9	U 0 4 9	4,000	P	S 0 1									
2 5 0	U 0 5 0	4,000	P	S 0 1									
2 5 1	U 0 5 1	4,000	P	S 0 1									
2 5 2	U 0 5 2	4,100	P	S 0 1									
2 5 3	U 0 5 3	4,000	P	S 0 1									
2 5 4	U 0 5 5	4,000	P	S 0 1									
2 5 5	U 0 5 6	4,100	P	S 0 1									
2 5 6	U 0 5 7	4,100	P	S 0 1									
2 5 7	U 0 5 8	4,000	P	S 0 1									
2 5 8	U 0 5 9	4,000	P	S 0 1									
2 5 9	U 0 6 0	4,000	P	S 0 1									
2 6 0	U 0 6 1	4,000	P	S 0 1									
2 6 1	U 0 6 2	4,000	P	S 0 1									
2 6 2	U 0 6 3	4,000	P	S 0 1									
2 6 3	U 0 6 4	4,000	P	S 0 1									
2 6 4	U 0 6 6	4,000	P	S 0 1									
2 6 5	U 0 6 7	4,000	P	S 0 1									
2 6 6	U 0 6 8	4,000	P	S 0 1									
2 6 7	U 0 6 9	4,000	P	S 0 1									
2 6 8	U 0 7 0	4,000	P	S 0 1									
2 6 9	U 0 7 1	4,000	P	S 0 1									
2 7 0	U 0 7 2	4,000	P	S 0 1									
2 7 1	U 0 7 3	4,000	P	S 0 1									
2 7 2	U 0 7 4	4,000	P	S 0 1									
2 7 3	U 0 7 5	4,100	P	S 0 1									

9. Descriptions of Hazardous Wastes (Continued. Use the Additional Sheet(s) as necessary; number pages as 5 a, etc.)

Line Number	A. EPA Hazardous Waste No. (Enter code)	B. Estimated Annual Quantity of Waste	C. Unit of Measure (Enter code)	D. PROCESSES (1) PROCESS CODES (Enter code)									D. PROCESSES (2) PROCESS DESCRIPTION (If a code is not entered in D(1))
Technical Area 54, Area G (Continued)													
2	7 4 U 0 7 6	4,000	P	S	0	1							
2	7 5 U 0 7 7	4,100	P	S	0	1							
2	7 6 U 0 7 8	4,000	P	S	0	1							
2	7 7 U 0 7 9	4,000	P	S	0	1							
2	7 8 U 0 8 0	12,000	P	S	0	1							
2	7 9 U 0 8 1	4,000	P	S	0	1							
2	8 0 U 0 8 2	4,000	P	S	0	1							
2	8 1 U 0 8 3	4,000	P	S	0	1							
2	8 2 U 0 8 4	4,000	P	S	0	1							
2	8 3 U 0 8 5	4,000	P	S	0	1							
2	8 4 U 0 8 6	4,000	P	S	0	1							
2	8 5 U 0 8 7	4,000	P	S	0	1							
2	8 6 U 0 8 8	4,000	P	S	0	1							
2	8 7 U 0 8 9	4,000	P	S	0	1							
2	8 8 U 0 9 0	4,000	P	S	0	1							
2	8 9 U 0 9 1	4,000	P	S	0	1							
2	9 0 U 0 9 2	4,000	P	S	0	1							
2	9 1 U 0 9 3	4,000	P	S	0	1							
2	9 2 U 0 9 4	4,000	P	S	0	1							
2	9 3 U 0 9 5	4,000	P	S	0	1							
2	9 4 U 0 9 6	4,000	P	S	0	1							
2	9 5 U 0 9 7	4,000	P	S	0	1							
2	9 6 U 0 9 8	4,000	P	S	0	1							
2	9 7 U 0 9 9	4,000	P	S	0	1							
2	9 8 U 1 0 1	4,000	P	S	0	1							
2	9 9 U 1 0 2	4,000	P	S	0	1							
3	0 0 U 1 0 3	4,000	P	S	0	1							
3	0 1 U 1 0 5	4,000	P	S	0	1							
3	0 2 U 1 0 6	4,000	P	S	0	1							
3	0 3 U 1 0 7	4,000	P	S	0	1							
3	0 4 U 1 0 8	4,100	P	S	0	1							
3	0 5 U 1 0 9	4,000	P	S	0	1							
3	0 6 U 1 1 0	4,000	P	S	0	1							
3	0 7 U 1 1 1	4,000	P	S	0	1							
3	0 8 U 1 1 2	4,100	P	S	0	1							
3	0 9 U 1 1 3	4,000	P	S	0	1							
3	1 0 U 1 1 4	4,000	P	S	0	1							
3	1 1 U 1 1 5	4,100	P	S	0	1							
3	1 2 U 1 1 6	4,000	P	S	0	1							

9. Descriptions of Hazardous Wastes (Continued. Use the Additional Sheet(s) as necessary; number pages as 5 a, etc.)

Line Number	A. EPA Hazardous Waste No. (Enter code)	B. Estimated Annual Quantity of Waste	C. Unit of Measure (Enter code)	D. PROCESSES (1) PROCESS CODES (Enter code)								D. PROCESSES (2) PROCESS DESCRIPTION (If a code is not entered in D(1))
Technical Area 54, Area G (Continued)												
3 1 3	U 1 1 7	4,100	P	S 0 1								
3 1 4	U 1 1 8	4,000	P	S 0 1								
3 1 5	U 1 1 9	4,000	P	S 0 1								
3 1 6	U 1 2 0	4,000	P	S 0 1								
3 1 7	U 1 2 1	4,100	P	S 0 1								
3 1 8	U 1 2 2	7,100	P	S 0 1								
3 1 9	U 1 2 3	4,100	P	S 0 1								
3 2 0	U 1 2 4	4,000	P	S 0 1								
3 2 1	U 1 2 5	4,000	P	S 0 1								
3 2 2	U 1 2 6	4,000	P	S 0 1								
3 2 3	U 1 2 7	4,000	P	S 0 1								
3 2 4	U 1 2 8	4,000	P	S 0 1								
3 2 5	U 1 2 9	4,000	P	S 0 1								
3 2 6	U 1 3 0	4,000	P	S 0 1								
3 2 7	U 1 3 1	4,100	P	S 0 1								
3 2 8	U 1 3 2	4,000	P	S 0 1								
3 2 9	U 1 3 3	4,100	P	S 0 1								
3 3 0	U 1 3 4	12,100	P	S 0 1								
3 3 1	U 1 3 5	4,100	P	S 0 1								
3 3 2	U 1 3 6	4,000	P	S 0 1								
3 3 3	U 1 3 7	4,000	P	S 0 1								
3 3 4	U 1 3 8	4,000	P	S 0 1								
3 3 5	U 1 4 0	4,100	P	S 0 1								
3 3 6	U 1 4 1	4,000	P	S 0 1								
3 3 7	U 1 4 2	4,000	P	S 0 1								
3 3 8	U 1 4 3	4,000	P	S 0 1								
3 3 9	U 1 4 4	4,100	P	S 0 1								
3 4 0	U 1 4 5	4,000	P	S 0 1								
3 4 1	U 1 4 6	4,000	P	S 0 1								
3 4 2	U 1 4 7	4,000	P	S 0 1								
3 4 3	U 1 4 8	4,000	P	S 0 1								
3 4 4	U 1 4 9	4,000	P	S 0 1								
3 4 5	U 1 5 0	4,000	P	S 0 1								
3 4 6	U 1 5 1	7,100	P	S 0 1								
3 4 7	U 1 5 2	4,000	P	S 0 1								
3 4 8	U 1 5 3	4,000	P	S 0 1								
3 4 9	U 1 5 4	4,100	P	S 0 1								
3 5 0	U 1 5 5	4,000	P	S 0 1								
3 5 1	U 1 5 6	4,000	P	S 0 1								

9. Descriptions of Hazardous Wastes (Continued. Use the Additional Sheet(s) as necessary; number pages as 5 a, etc.)

Line Number			A. EPA Hazardous Waste No. (Enter code)				B. Estimated Annual Quantity of Waste	C. Unit of Measure (Enter code)	D. PROCESSES (1) PROCESS CODES (Enter code)									(2) PROCESS DESCRIPTION (If a code is not entered in D(1))
Technical Area 54, Area G (Continued)																		
3	5	2	U	1	5	7	4,000	P	S	0	1							
3	5	3	U	1	5	8	4,000	P	S	0	1							
3	5	4	U	1	5	9	4,100	P	S	0	1							
3	5	5	U	1	6	0	4,100	P	S	0	1							
3	5	6	U	1	6	1	4,100	P	S	0	1							
3	5	7	U	1	6	2	4,000	P	S	0	1							
3	5	8	U	1	6	3	4,000	P	S	0	1							
3	5	9	U	1	6	4	4,000	P	S	0	1							
3	6	0	U	1	6	5	4,100	P	S	0	1							
3	6	1	U	1	6	6	4,000	P	S	0	1							
3	6	2	U	1	6	7	4,000	P	S	0	1							
3	6	3	U	1	6	8	4,000	P	S	0	1							
3	6	4	U	1	6	9	4,100	P	S	0	1							
3	6	5	U	1	7	0	4,000	P	S	0	1							
3	6	6	U	1	7	1	4,000	P	S	0	1							
3	6	7	U	1	7	2	4,000	P	S	0	1							
3	6	8	U	1	7	3	4,000	P	S	0	1							
3	6	9	U	1	7	4	4,000	P	S	0	1							
3	7	0	U	1	7	6	4,000	P	S	0	1							
3	7	1	U	1	7	7	4,000	P	S	0	1							
3	7	2	U	1	7	8	4,000	P	S	0	1							
3	7	3	U	1	7	9	4,000	P	S	0	1							
3	7	4	U	1	8	0	4,000	P	S	0	1							
3	7	5	U	1	8	1	4,000	P	S	0	1							
3	7	6	U	1	8	2	4,000	P	S	0	1							
3	7	7	U	1	8	3	4,000	P	S	0	1							
3	7	8	U	1	8	4	4,000	P	S	0	1							
3	7	9	U	1	8	5	4,000	P	S	0	1							
3	8	0	U	1	8	6	4,000	P	S	0	1							
3	8	1	U	1	8	7	4,000	P	S	0	1							
3	8	2	U	1	8	8	4,100	P	S	0	1							
3	8	3	U	1	8	9	4,000	P	S	0	1							
3	8	4	U	1	9	0	4,100	P	S	0	1							
3	8	5	U	1	9	1	4,000	P	S	0	1							
3	8	6	U	1	9	2	4,000	P	S	0	1							
3	8	7	U	1	9	3	4,000	P	S	0	1							
3	8	8	U	1	9	4	4,000	P	S	0	1							
3	8	9	U	1	9	6	4,100	P	S	0	1							
3	9	0	U	1	9	7	4,000	P	S	0	1							

9. Descriptions of Hazardous Wastes (Continued. Use the Additional Sheet(s) as necessary; number pages as 5 a, etc.)

Line Number			A. EPA Hazardous Waste No. (Enter code)				B. Estimated Annual Quantity of Waste	C. Unit of Measure (Enter code)	D. PROCESSES (1) PROCESS CODES (Enter code)									(2) PROCESS DESCRIPTION (If a code is not entered in D(1))
Technical Area 54, Area G (Continued)																		
3	9	1	U	2	0	0	4,000	P	S	0	1							
3	9	2	U	2	0	1	4,000	P	S	0	1							
3	9	3	U	2	0	2	4,000	P	S	0	1							
3	9	4	U	2	0	3	4,000	P	S	0	1							
3	9	5	U	2	0	4	4,100	P	S	0	1							
3	9	6	U	2	0	5	4,000	P	S	0	1							
3	9	7	U	2	0	6	4,000	P	S	0	1							
3	9	8	U	2	0	7	4,000	P	S	0	1							
3	9	9	U	2	0	8	4,000	P	S	0	1							
4	0	0	U	2	0	9	4,000	P	S	0	1							
4	0	1	U	2	1	0	4,100	P	S	0	1							
4	0	2	U	2	1	1	4,100	P	S	0	1							
4	0	3	U	2	1	3	4,100	P	S	0	1							
4	0	4	U	2	1	4	4,000	P	S	0	1							
4	0	5	U	2	1	5	4,000	P	S	0	1							
4	0	6	U	2	1	6	4,100	P	S	0	1							
4	0	7	U	2	1	7	4,000	P	S	0	1							
4	0	8	U	2	1	8	4,100	P	S	0	1							
4	0	9	U	2	1	9	4,100	P	S	0	1							
4	1	0	U	2	2	0	7,100	P	S	0	1							
4	1	1	U	2	2	1	4,000	P	S	0	1							
4	1	2	U	2	2	2	4,000	P	S	0	1							
4	1	3	U	2	2	3	4,000	P	S	0	1							
4	1	4	U	2	2	5	4,100	P	S	0	1							
4	1	5	U	2	2	6	7,100	P	S	0	1							
4	1	6	U	2	2	7	4,100	P	S	0	1							
4	1	7	U	2	2	8	7,100	P	S	0	1							
4	1	8	U	2	3	4	4,000	P	S	0	1							
4	1	9	U	2	3	5	4,000	P	S	0	1							
4	2	0	U	2	3	6	4,000	P	S	0	1							
4	2	1	U	2	3	7	4,000	P	S	0	1							
4	2	2	U	2	3	8	4,000	P	S	0	1							
4	2	3	U	2	3	9	7,100	P	S	0	1							
4	2	4	U	2	4	0	4,000	P	S	0	1							
4	2	5	U	2	4	3	4,000	P	S	0	1							
4	2	6	U	2	4	4	4,000	P	S	0	1							
4	2	7	U	2	4	6	4,100	P	S	0	1							
4	2	8	U	2	4	7	4,000	P	S	0	1							
4	2	9	U	2	4	8	4,000	P	S	0	1							

9. Descriptions of Hazardous Wastes (Continued. Use the Additional Sheet(s) as necessary; number pages as 5 a, etc.)

Line Number	A. EPA Hazardous Waste No. (Enter code)	B. Estimated Annual Quantity of Waste	C. Unit of Measure (Enter code)	D. PROCESSES (1) PROCESS CODES (Enter code)									D. PROCESSES (2) PROCESS DESCRIPTION (If a code is not entered in D(1))
Technical Area 54, Area G (Continued)													
430	U247	4,000	P	S01									
431	U271	4,000	P	S01									
432	U278	4,000	P	S01									
433	U279	4,000	P	S01									
434	U280	4,000	P	S01									
435	U328	4,000	P	S01									
436	U353	4,000	P	S01									
437	U359	4,000	P	S01									
438	U364	4,000	P	S01									
439	U367	4,000	P	S01									
440	U372	4,000	P	S01									
441	U373	4,000	P	S01									
442	U387	4,000	P	S01									
443	U389	4,000	P	S01									
444	U394	4,000	P	S01									
445	U395	4,000	P	S01									
446	U404	4,000	P	S01									
447	U409	4,000	P	S01									
448	U410	4,000	P	S01									
449	U411	4,000	P	S01									

9. Descriptions of Hazardous Wastes (Continued. Use the Additional Sheet(s) as necessary; number pages as 5 a, etc.)

Line Number		*A. EPA Hazardous Waste No. (Enter code)*				*B. Estimated Annual Quantity of Waste*	*C. Unit of Measure (Enter code)*	*D. PROCESSES*									
								(1) PROCESS CODES (Enter code)									*(2) PROCESS DESCRIPTION (If a code is not entered in D(1))*
Technical Area 54, Material Dispsoal Area G (Shaft 124 and Pit 29) [a, b]																	
	1	D	0	0	4	850	P	D	8	0							
	2	D	0	0	5	2,100	P	D	8	0							
	3	D	0	0	6	4,250	P	D	8	0							
	4	D	0	0	7	4,450	P	D	8	0							
	5	D	0	0	8	507,100	P	D	8	0							
	6	D	0	0	9	850	P	D	8	0							
	7	D	0	1	0	15	P	D	8	0							
	8	D	0	1	1	530	P	D	8	0							
	9																
1	0																
1	1																
1	2																
1	3																
1	4																
1	5																
1	6																
1	7																
1	8																
1	9																
2	0																
2	1																
2	2																
2	3																
2	4																
2	5																
2	6																
2	7																
2	8																
2	9																
3	0																
3	1																
3	2																
3	3																
3	4																
3	5																
3	6																
3	7																
3	8																
3	9																

[a] Based on total estimated hazardous waste chemical inventory from the TA-54 RFI Report, Los Alamos National Laboratory, Los Alamos, New Mexico, March 2000.

[b] To be closed in accordance with Code of Federal Regulations (CFR), Title 40, Part 265, Subpart G. Permitted status is not requested.

9. Descriptions of Hazardous Wastes (Continued. Use the Additional Sheet(s) as necessary; number pages as 5 a, etc.)

Line Number		A. EPA Hazardous Waste No. (Enter code)				B. Estimated Annual Quantity of Waste	C. Unit of Measure (Enter code)	D. PROCESSES (1) PROCESS CODES (Enter code)									(2) PROCESS DESCRIPTION (If a code is not entered in D(1))
Technical Area 54, West																	
	1	D	0	0	1	18,563	P	S	0	1							
	2	D	0	0	2	9,612	P	S	0	1							
	3	D	0	0	3	882	P	S	0	1							
	4	D	0	0	4	6,173	P	S	0	1							
	5	D	0	0	5	5,644	P	S	0	1							
	6	D	0	0	6	906,805	P	S	0	1							
	7	D	0	0	7	946,136	P	S	0	1							
	8	D	0	0	8	2,147,302	P	S	0	1							
	9	D	0	0	9	65,433	P	S	0	1							
1	0	D	0	1	0	6,790	P	S	0	1							
1	1	D	0	1	1	7,584	P	S	0	1							
1	2	D	0	1	2	9,000	P	S	0	1							
1	3	D	0	1	3	2,000	P	S	0	1							
1	4	D	0	1	4	2,000	P	S	0	1							
1	5	D	0	1	5	3,500	P	S	0	1							
1	6	D	0	1	6	2,000	P	S	0	1							
1	7	D	0	1	7	2,000	P	S	0	1							
1	8	D	0	1	8	353	P	S	0	1							
1	9	D	0	1	9	7,055	P	S	0	1							
2	0	D	0	2	0	15,000	P	S	0	1							
2	1	D	0	2	1	1,220	P	S	0	1							
2	2	D	0	2	2	1,676	P	S	0	1							
2	3	D	0	2	3	2,000	P	S	0	1							
2	4	D	0	2	4	2,000	P	S	0	1							
2	5	D	0	2	5	2,000	P	S	0	1							
2	6	D	0	2	6	2,000	P	S	0	1							
2	7	D	0	2	7	1,014	P	S	0	1							
2	8	D	0	2	8	289,600	P	S	0	1							
2	9	D	0	2	9	288,144	P	S	0	1							
3	0	D	0	3	0	6,525	P	S	0	1							
3	1	D	0	3	1	88	P	S	0	1							
3	2	D	0	3	2	4,145	P	S	0	1							
3	3	D	0	3	3	2,778	P	S	0	1							
3	4	D	0	3	4	1,455	P	S	0	1							
3	5	D	0	3	5	132	P	S	0	1							
3	6	D	0	3	6	441	P	S	0	1							
3	7	D	0	3	7	705	P	S	0	1							
3	8	D	0	3	8	88	P	S	0	1							
3	9	D	0	3	9	1,940	P	S	0	1							

9. Descriptions of Hazardous Wastes (Continued. Use the Additional Sheet(s) as necessary; number pages as 5 a, etc.)

Line Number	*A. EPA Hazardous Waste No. (Enter code)*		*B. Estimated Annual Quantity of Waste*	*C. Unit of Measure (Enter code)*	*D. PROCESSES*												
					(1) PROCESS CODES (Enter code)												*(2) PROCESS DESCRIPTION (If a code is not entered in D(1))*
Technical Area 54, West (Continued)																	
4 0	D 0 4 0		4,365	P	S	0	1										
4 1	D 0 4 1		88	P	S	0	1										
4 2	D 0 4 2		1,411	P	S	0	1										
4 3	D 0 4 3		529	P	S	0	1										
4 4	F 0 0 1		556,402	P	S	0	1										
4 5	F 0 0 2		72,003	P	S	0	1										
4 6	F 0 0 3		34,464	P	S	0	1										
4 7	F 0 0 4		2,160	P	S	0	1										
4 8	F 0 0 5		324,211	P	S	0	1										
4 9	F 0 0 6		3,500	P	S	0	1										
5 0	F 0 0 7		9,000	P	S	0	1										
5 1	F 0 0 8		3,500	P	S	0	1										
5 2	F 0 0 9		2,000	P	S	0	1										
5 3	F 0 1 0		2,000	P	S	0	1										
5 4	F 0 1 1		2,000	P	S	0	1										
5 5	F 0 1 2		2,000	P	S	0	1										
5 6	F 0 1 9		2,000	P	S	0	1										
5 7	F 0 2 0		2,000	P	S	0	1										
5 8	F 0 2 1		2,000	P	S	0	1										
5 9	F 0 2 2		2,000	P	S	0	1										
6 0	F 0 2 3		2,000	P	S	0	1										
6 1	F 0 2 4		2,000	P	S	0	1										
6 2	F 0 2 5		2,000	P	S	0	1										
6 3	F 0 2 6		2,000	P	S	0	1										
6 4	F 0 2 7		2,000	P	S	0	1										
6 5	F 0 2 8		2,000	P	S	0	1										
6 6	F 0 3 2		2,000	P	S	0	1										
6 7	F 0 3 4		2,000	P	S	0	1										
6 8	F 0 3 5		2,000	P	S	0	1										
6 9	F 0 3 7		2,000	P	S	0	1										
7 0	F 0 3 8		2,000	P	S	0	1										
7 1	F 0 3 9		2,000	P	S	0	1										
7 2	K 0 4 4		1,000	P	S	0	1										
7 3	K 0 4 5		2,000	P	S	0	1										
7 4	K 0 4 6		2,000	P	S	0	1										
7 5	K 0 4 7		2,000	P	S	0	1										
7 6	K 0 8 4		250	P	S	0	1										
7 7	K 1 0 1		250	P	S	0	1										
7 8	K 1 0 2		250	P	S	0	1										

9. Descriptions of Hazardous Wastes (Continued. Use the Additional Sheet(s) as necessary; number pages as 5 a, etc.)

Line Number	A. EPA Hazardous Waste No. (Enter code)	B. Estimated Annual Quantity of Waste	C. Unit of Measure (Enter code)	D. PROCESSES (1) PROCESS CODES (Enter code)													D. PROCESSES (2) PROCESS DESCRIPTION (If a code is not entered in D(1))
Technical Area 54, West (Continued)																	
7 9	P 0 0 1	44	P	S	0	1											
8 0	P 0 0 2	44	P	S	0	1											
8 1	P 0 0 3	44	P	S	0	1											
8 2	P 0 0 4	44	P	S	0	1											
8 3	P 0 0 5	44	P	S	0	1											
8 4	P 0 0 6	44	P	S	0	1											
8 5	P 0 0 7	44	P	S	0	1											
8 6	P 0 0 8	44	P	S	0	1											
8 7	P 0 0 9	44	P	S	0	1											
8 8	P 0 1 0	44	P	S	0	1											
8 9	P 0 1 1	44	P	S	0	1											
9 0	P 0 1 2	44	P	S	0	1											
9 1	P 0 1 3	44	P	S	0	1											
9 2	P 0 1 4	44	P	S	0	1											
9 3	P 0 1 5	44	P	S	0	1											
9 4	P 0 1 6	44	P	S	0	1											
9 5	P 0 1 7	44	P	S	0	1											
9 6	P 0 1 8	44	P	S	0	1											
9 7	P 0 2 0	44	P	S	0	1											
9 8	P 0 2 1	44	P	S	0	1											
9 9	P 0 2 2	44	P	S	0	1											
1 0 0	P 0 2 3	44	P	S	0	1											
1 0 1	P 0 2 4	44	P	S	0	1											
1 0 2	P 0 2 6	44	P	S	0	1											
1 0 3	P 0 2 7	44	P	S	0	1											
1 0 4	P 0 2 8	44	P	S	0	1											
1 0 5	P 0 2 9	44	P	S	0	1											
1 0 6	P 0 3 0	44	P	S	0	1											
1 0 7	P 0 3 1	44	P	S	0	1											
1 0 8	P 0 3 3	44	P	S	0	1											
1 0 9	P 0 3 4	44	P	S	0	1											
1 1 0	P 0 3 6	44	P	S	0	1											
1 1 1	P 0 3 7	44	P	S	0	1											
1 1 2	P 0 3 8	44	P	S	0	1											
1 1 3	P 0 3 9	44	P	S	0	1											
1 1 4	P 0 4 0	44	P	S	0	1											
1 1 5	P 0 4 1	44	P	S	0	1											
1 1 6	P 0 4 2	44	P	S	0	1											
1 1 7	P 0 4 3	44	P	S	0	1											

9. Descriptions of Hazardous Wastes (Continued. Use the Additional Sheet(s) as necessary; number pages as 5 a, etc.)

Line Number	A. EPA Hazardous Waste No. (Enter code)	B. Estimated Annual Quantity of Waste	C. Unit of Measure (Enter code)	D. PROCESSES (1) PROCESS CODES (Enter code)													D. PROCESSES (2) PROCESS DESCRIPTION (If a code is not entered in D(1))
Technical Area 54, West (Continued)																	
1 1 8	P 0 4 4	44	P	S	0	1											
1 1 9	P 0 4 5	44	P	S	0	1											
1 2 0	P 0 4 6	44	P	S	0	1											
1 2 1	P 0 4 7	44	P	S	0	1											
1 2 2	P 0 4 8	44	P	S	0	1											
1 2 3	P 0 4 9	44	P	S	0	1											
1 2 4	P 0 5 0	44	P	S	0	1											
1 2 5	P 0 5 1	44	P	S	0	1											
1 2 6	P 0 5 4	44	P	S	0	1											
1 2 7	P 0 5 6	44	P	S	0	1											
1 2 8	P 0 5 7	44	P	S	0	1											
1 2 9	P 0 5 8	44	P	S	0	1											
1 3 0	P 0 5 9	44	P	S	0	1											
1 3 1	P 0 6 0	44	P	S	0	1											
1 3 2	P 0 6 2	44	P	S	0	1											
1 3 3	P 0 6 3	44	P	S	0	1											
1 3 4	P 0 6 4	44	P	S	0	1											
1 3 5	P 0 6 5	44	P	S	0	1											
1 3 6	P 0 6 6	44	P	S	0	1											
1 3 7	P 0 6 7	44	P	S	0	1											
1 3 8	P 0 6 8	44	P	S	0	1											
1 3 9	P 0 6 9	44	P	S	0	1											
1 4 0	P 0 7 0	44	P	S	0	1											
1 4 1	P 0 7 1	44	P	S	0	1											
1 4 2	P 0 7 2	44	P	S	0	1											
1 4 3	P 0 7 3	44	P	S	0	1											
1 4 4	P 0 7 4	44	P	S	0	1											
1 4 5	P 0 7 5	44	P	S	0	1											
1 4 6	P 0 7 6	44	P	S	0	1											
1 4 7	P 0 7 7	44	P	S	0	1											
1 4 8	P 0 7 8	44	P	S	0	1											
1 4 9	P 0 8 1	44	P	S	0	1											
1 5 0	P 0 8 2	44	P	S	0	1											
1 5 1	P 0 8 4	44	P	S	0	1											
1 5 2	P 0 8 5	44	P	S	0	1											
1 5 3	P 0 8 7	44	P	S	0	1											
1 5 4	P 0 8 8	44	P	S	0	1											
1 5 5	P 0 8 9	44	P	S	0	1											
1 5 6	P 0 9 2	44	P	S	0	1											

9. Descriptions of Hazardous Wastes (Continued. Use the Additional Sheet(s) as necessary; number pages as 5 a, etc.)

Line Number	*A. EPA Hazardous Waste No. (Enter code)*	*B. Estimated Annual Quantity of Waste*	*C. Unit of Measure (Enter code)*	*D. PROCESSES*	
				(1) PROCESS CODES (Enter code)	*(2) PROCESS DESCRIPTION (If a code is not entered in D(1))*
Technical Area 54, West (Continued)					
1 5 7	P 0 9 3	44	P	S 0 1	
1 5 8	P 0 9 4	44	P	S 0 1	
1 5 9	P 0 9 5	44	P	S 0 1	
1 6 0	P 0 9 6	44	P	S 0 1	
1 6 1	P 0 9 7	44	P	S 0 1	
1 6 2	P 0 9 8	44	P	S 0 1	
1 6 3	P 0 9 9	44	P	S 0 1	
1 6 4	P 1 0 1	44	P	S 0 1	
1 6 5	P 1 0 2	44	P	S 0 1	
1 6 6	P 1 0 3	44	P	S 0 1	
1 6 7	P 1 0 4	44	P	S 0 1	
1 6 8	P 1 0 5	44	P	S 0 1	
1 6 9	P 1 0 6	44	P	S 0 1	
1 7 0	P 1 0 8	44	P	S 0 1	
1 7 1	P 1 0 9	44	P	S 0 1	
1 7 2	P 1 1 0	44	P	S 0 1	
1 7 3	P 1 1 1	44	P	S 0 1	
1 7 4	P 1 1 2	44	P	S 0 1	
1 7 5	P 1 1 3	44	P	S 0 1	
1 7 6	P 1 1 4	44	P	S 0 1	
1 7 7	P 1 1 5	44	P	S 0 1	
1 7 8	P 1 1 6	44	P	S 0 1	
1 7 9	P 1 1 8	44	P	S 0 1	
1 8 0	P 1 1 9	44	P	S 0 1	
1 8 1	P 1 2 0	44	P	S 0 1	
1 8 2	P 1 2 1	44	P	S 0 1	
1 8 3	P 1 2 2	44	P	S 0 1	
1 8 4	P 1 2 3	44	P	S 0 1	
1 8 5	P 1 2 7	44	P	S 0 1	
1 8 6	P 1 2 8	44	P	S 0 1	
1 8 7	P 1 8 5	44	P	S 0 1	
1 8 8	P 1 8 8	44	P	S 0 1	
1 8 9	P 1 8 9	44	P	S 0 1	
1 9 0	P 1 9 0	44	P	S 0 1	
1 9 1	P 1 9 1	44	P	S 0 1	
1 9 2	P 1 9 2	44	P	S 0 1	
1 9 3	P 1 9 4	44	P	S 0 1	
1 9 4	P 1 9 6	44	P	S 0 1	
1 9 5	P 1 9 7	44	P	S 0 1	

9. Descriptions of Hazardous Wastes (Continued. Use the Additional Sheet(s) as necessary; number pages as 5 a, etc.)

Line Number			*A. EPA Hazardous Waste No. (Enter code)*				*B. Estimated Annual Quantity of Waste*	*C. Unit of Measure (Enter code)*	*D. PROCESSES (1) PROCESS CODES (Enter code)*									*(2) PROCESS DESCRIPTION (If a code is not entered in D(1))*
Technical Area 54, West (Continued)																		
1	9	6	P	1	9	8	44	P	S	0	1							
1	9	7	P	1	9	9	44	P	S	0	1							
1	9	8	P	2	0	1	44	P	S	0	1							
1	9	9	P	2	0	2	44	P	S	0	1							
2	0	0	P	2	0	3	44	P	S	0	1							
2	0	1	P	2	0	4	44	P	S	0	1							
2	0	2	P	2	0	5	44	P	S	0	1							
2	0	3	U	0	0	1	44	P	S	0	1							
2	0	4	U	0	0	2	44	P	S	0	1							
2	0	5	U	0	0	3	44	P	S	0	1							
2	0	6	U	0	0	4	44	P	S	0	1							
2	0	7	U	0	0	5	44	P	S	0	1							
2	0	8	U	0	0	6	44	P	S	0	1							
2	0	9	U	0	0	7	44	P	S	0	1							
2	1	0	U	0	0	8	44	P	S	0	1							
2	1	1	U	0	0	9	44	P	S	0	1							
2	1	2	U	0	1	0	44	P	S	0	1							
2	1	3	U	0	1	1	44	P	S	0	1							
2	1	4	U	0	1	2	44	P	S	0	1							
2	1	5	U	0	1	4	44	P	S	0	1							
2	1	6	U	0	1	5	44	P	S	0	1							
2	1	7	U	0	1	6	44	P	S	0	1							
2	1	8	U	0	1	7	44	P	S	0	1							
2	1	9	U	0	1	8	44	P	S	0	1							
2	2	0	U	0	1	9	44	P	S	0	1							
2	2	1	U	0	2	0	44	P	S	0	1							
2	2	2	U	0	2	1	44	P	S	0	1							
2	2	3	U	0	2	2	44	P	S	0	1							
2	2	4	U	0	2	3	44	P	S	0	1							
2	2	5	U	0	2	4	44	P	S	0	1							
2	2	6	U	0	2	5	44	P	S	0	1							
2	2	7	U	0	2	6	44	P	S	0	1							
2	2	8	U	0	2	7	44	P	S	0	1							
2	2	9	U	0	2	8	44	P	S	0	1							
2	3	0	U	0	2	9	44	P	S	0	1							
2	3	1	U	0	3	0	44	P	S	0	1							
2	3	2	U	0	3	1	44	P	S	0	1							
2	3	3	U	0	3	2	44	P	S	0	1							
2	3	4	U	0	3	3	44	P	S	0	1							

9. Descriptions of Hazardous Wastes (Continued. Use the Additional Sheet(s) as necessary; number pages as 5 a, etc.)

Line Number	A. EPA Hazardous Waste No. (Enter code)	B. Estimated Annual Quantity of Waste	C. Unit of Measure (Enter code)	D. PROCESSES (1) PROCESS CODES (Enter code)									D. PROCESSES (2) PROCESS DESCRIPTION (If a code is not entered in D(1))
Technical Area 54, West (Continued)													
2 3 5	U 0 3 4	44	P	S 0 1									
2 3 6	U 0 3 5	44	P	S 0 1									
2 3 7	U 0 3 6	44	P	S 0 1									
2 3 8	U 0 3 7	44	P	S 0 1									
2 3 9	U 0 3 8	44	P	S 0 1									
2 4 0	U 0 3 9	44	P	S 0 1									
2 4 1	U 0 4 1	44	P	S 0 1									
2 4 2	U 0 4 2	44	P	S 0 1									
2 4 3	U 0 4 3	44	P	S 0 1									
2 4 4	U 0 4 4	44	P	S 0 1									
2 4 5	U 0 4 5	44	P	S 0 1									
2 4 6	U 0 4 6	44	P	S 0 1									
2 4 7	U 0 4 7	44	P	S 0 1									
2 4 8	U 0 4 8	44	P	S 0 1									
2 4 9	U 0 4 9	44	P	S 0 1									
2 5 0	U 0 5 0	44	P	S 0 1									
2 5 1	U 0 5 1	44	P	S 0 1									
2 5 2	U 0 5 2	44	P	S 0 1									
2 5 3	U 0 5 3	44	P	S 0 1									
2 5 4	U 0 5 5	44	P	S 0 1									
2 5 5	U 0 5 6	44	P	S 0 1									
2 5 6	U 0 5 7	44	P	S 0 1									
2 5 7	U 0 5 8	44	P	S 0 1									
2 5 8	U 0 5 9	44	P	S 0 1									
2 5 9	U 0 6 0	44	P	S 0 1									
2 6 0	U 0 6 1	44	P	S 0 1									
2 6 1	U 0 6 2	44	P	S 0 1									
2 6 2	U 0 6 3	44	P	S 0 1									
2 6 3	U 0 6 4	44	P	S 0 1									
2 6 4	U 0 6 6	44	P	S 0 1									
2 6 5	U 0 6 7	44	P	S 0 1									
2 6 6	U 0 6 8	44	P	S 0 1									
2 6 7	U 0 6 9	44	P	S 0 1									
2 6 8	U 0 7 0	44	P	S 0 1									
2 6 9	U 0 7 1	44	P	S 0 1									
2 7 0	U 0 7 2	44	P	S 0 1									
2 7 1	U 0 7 3	44	P	S 0 1									
2 7 2	U 0 7 4	44	P	S 0 1									
2 7 3	U 0 7 5	44	P	S 0 1									

9. Descriptions of Hazardous Wastes (Continued. Use the Additional Sheet(s) as necessary; number pages as 5 a, etc.)

Line Number	A. EPA Hazardous Waste No. (Enter code)	B. Estimated Annual Quantity of Waste	C. Unit of Measure (Enter code)	D. PROCESSES (1) PROCESS CODES (Enter code)									D. PROCESSES (2) PROCESS DESCRIPTION (If a code is not entered in D(1))
Technical Area 54, West (Continued)													
2 74	U076	44	P	S01									
2 75	U077	44	P	S01									
2 76	U078	44	P	S01									
2 77	U079	44	P	S01									
2 78	U080	132	P	S01									
2 79	U081	44	P	S01									
2 80	U082	44	P	S01									
2 81	U083	44	P	S01									
2 82	U084	44	P	S01									
2 83	U085	44	P	S01									
2 84	U086	44	P	S01									
2 85	U087	44	P	S01									
2 86	U088	44	P	S01									
2 87	U089	44	P	S01									
2 88	U090	44	P	S01									
2 89	U091	44	P	S01									
2 90	U092	44	P	S01									
2 91	U093	44	P	S01									
2 92	U094	44	P	S01									
2 93	U095	44	P	S01									
2 94	U096	44	P	S01									
2 95	U097	44	P	S01									
2 96	U098	44	P	S01									
2 97	U099	44	P	S01									
2 98	U100	44	P	S01									
2 99	U101	44	P	S01									
3 00	U103	44	P	S01									
3 01	U105	44	P	S01									
3 02	U106	44	P	S01									
3 03	U107	44	P	S01									
3 04	U108	44	P	S01									
3 05	U109	44	P	S01									
3 06	U110	44	P	S01									
3 07	U111	44	P	S01									
3 08	U112	44	P	S01									
3 09	U113	44	P	S01									
3 10	U114	44	P	S01									
3 11	U115	44	P	S01									
3 12	U116	44	P	S01									

9. Descriptions of Hazardous Wastes (Continued. Use the Additional Sheet(s) as necessary; number pages as 5 a, etc.)

Line Number	A. EPA Hazardous Waste No. (Enter code)	B. Estimated Annual Quantity of Waste	C. Unit of Measure (Enter code)	D. PROCESSES (1) PROCESS CODES (Enter code)								D. PROCESSES (2) PROCESS DESCRIPTION (If a code is not entered in D(1))
Technical Area 54, West (Continued)												
3 1 3	U 1 1 7	44	P	S 0 1								
3 1 4	U 1 1 8	44	P	S 0 1								
3 1 5	U 1 1 9	44	P	S 0 1								
3 1 6	U 1 2 0	44	P	S 0 1								
3 1 7	U 1 2 1	44	P	S 0 1								
3 1 8	U 1 2 2	44	P	S 0 1								
3 1 9	U 1 2 3	44	P	S 0 1								
3 2 0	U 1 2 4	44	P	S 0 1								
3 2 1	U 1 2 5	44	P	S 0 1								
3 2 2	U 1 2 6	44	P	S 0 1								
3 2 3	U 1 2 7	44	P	S 0 1								
3 2 4	U 1 2 8	44	P	S 0 1								
3 2 5	U 1 2 9	44	P	S 0 1								
3 2 6	U 1 3 0	44	P	S 0 1								
3 2 7	U 1 3 1	44	P	S 0 1								
3 2 8	U 1 3 2	44	P	S 0 1								
3 2 9	U 1 3 3	44	P	S 0 1								
3 3 0	U 1 3 4	44	P	S 0 1								
3 3 1	U 1 3 5	44	P	S 0 1								
3 3 2	U 1 3 6	44	P	S 0 1								
3 3 3	U 1 3 7	44	P	S 0 1								
3 3 4	U 1 3 8	44	P	S 0 1								
3 3 5	U 1 4 0	44	P	S 0 1								
3 3 6	U 1 4 1	44	P	S 0 1								
3 3 7	U 1 4 2	44	P	S 0 1								
3 3 8	U 1 4 3	44	P	S 0 1								
3 3 9	U 1 4 4	44	P	S 0 1								
3 4 0	U 1 4 5	44	P	S 0 1								
3 4 1	U 1 4 6	44	P	S 0 1								
3 4 2	U 1 4 7	44	P	S 0 1								
3 4 3	U 1 4 8	44	P	S 0 1								
3 4 4	U 1 4 9	44	P	S 0 1								
3 4 5	U 1 5 0	44	P	S 0 1								
3 4 6	U 1 5 1	265	P	S 0 1								
3 4 7	U 1 5 2	44	P	S 0 1								
3 4 8	U 1 5 3	44	P	S 0 1								
3 4 9	U 1 5 4	44	P	S 0 1								
3 5 0	U 1 5 5	44	P	S 0 1								
3 5 1	U 1 5 6	44	P	S 0 1								

9. Descriptions of Hazardous Wastes (Continued. Use the Additional Sheet(s) as necessary; number pages as 5 a, etc.)

Line Number	A. EPA Hazardous Waste No. (Enter code)	B. Estimated Annual Quantity of Waste	C. Unit of Measure (Enter code)	D. PROCESSES (1) PROCESS CODES (Enter code)								D. PROCESSES (2) PROCESS DESCRIPTION (If a code is not entered in D(1))
Technical Area 54, West (Continued)												
3 5 2	U 1 5 7	44	P	S 0 1								
3 5 3	U 1 5 8	44	P	S 0 1								
3 5 4	U 1 5 9	132	P	S 0 1								
3 5 5	U 1 6 0	44	P	S 0 1								
3 5 6	U 1 6 1	44	P	S 0 1								
3 5 7	U 1 6 2	44	P	S 0 1								
3 5 8	U 1 6 3	44	P	S 0 1								
3 5 9	U 1 6 4	44	P	S 0 1								
3 6 0	U 1 6 5	44	P	S 0 1								
3 6 1	U 1 6 6	44	P	S 0 1								
3 6 2	U 1 6 7	44	P	S 0 1								
3 6 3	U 1 6 8	44	P	S 0 1								
3 6 4	U 1 6 9	44	P	S 0 1								
3 6 5	U 1 7 0	44	P	S 0 1								
3 6 6	U 1 7 1	44	P	S 0 1								
3 6 7	U 1 7 2	44	P	S 0 1								
3 6 8	U 1 7 3	44	P	S 0 1								
3 6 9	U 1 7 4	44	P	S 0 1								
3 7 0	U 1 7 6	44	P	S 0 1								
3 7 1	U 1 7 7	44	P	S 0 1								
3 7 2	U 1 7 8	44	P	S 0 1								
3 7 3	U 1 7 9	44	P	S 0 1								
3 7 4	U 1 8 0	44	P	S 0 1								
3 7 5	U 1 8 1	44	P	S 0 1								
3 7 6	U 1 8 2	44	P	S 0 1								
3 7 7	U 1 8 3	44	P	S 0 1								
3 7 8	U 1 8 4	44	P	S 0 1								
3 7 9	U 1 8 5	44	P	S 0 1								
3 8 0	U 1 8 6	44	P	S 0 1								
3 8 1	U 1 8 7	44	P	S 0 1								
3 8 2	U 1 8 8	44	P	S 0 1								
3 8 3	U 1 8 9	44	P	S 0 1								
3 8 4	U 1 9 0	44	P	S 0 1								
3 8 5	U 1 9 1	44	P	S 0 1								
3 8 6	U 1 9 2	44	P	S 0 1								
3 8 7	U 1 9 3	44	P	S 0 1								
3 8 8	U 1 9 4	44	P	S 0 1								
3 8 9	U 1 9 6	44	P	S 0 1								
3 9 0	U 1 9 7	44	P	S 0 1								

9. Descriptions of Hazardous Wastes (Continued. Use the Additional Sheet(s) as necessary; number pages as 5 a, etc.)

Line Number	A. EPA Hazardous Waste No. (Enter code)	B. Estimated Annual Quantity of Waste	C. Unit of Measure (Enter code)	D. PROCESSES (1) PROCESS CODES (Enter code)									D. PROCESSES (2) PROCESS DESCRIPTION (If a code is not entered in D(1))
Technical Area 54, West (Continued)													
3 9 1	U 2 0 0	44	P	S 0 1									
3 9 2	U 2 0 1	44	P	S 0 1									
3 9 3	U 2 0 2	44	P	S 0 1									
3 9 4	U 2 0 3	44	P	S 0 1									
3 9 5	U 2 0 4	44	P	S 0 1									
3 9 6	U 2 0 5	44	P	S 0 1									
3 9 7	U 2 0 6	44	P	S 0 1									
3 9 8	U 2 0 7	44	P	S 0 1									
3 9 9	U 2 0 8	44	P	S 0 1									
4 0 0	U 2 0 9	44	P	S 0 1									
4 0 1	U 2 1 0	44	P	S 0 1									
4 0 2	U 2 1 1	44	P	S 0 1									
4 0 3	U 2 1 3	44	P	S 0 1									
4 0 4	U 2 1 4	44	P	S 0 1									
4 0 5	U 2 1 5	44	P	S 0 1									
4 0 6	U 2 1 6	44	P	S 0 1									
4 0 7	U 2 1 7	44	P	S 0 1									
4 0 8	U 2 1 8	44	P	S 0 1									
4 0 9	U 2 1 9	44	P	S 0 1									
4 1 0	U 2 2 0	44	P	S 0 1									
4 1 1	U 2 2 1	44	P	S 0 1									
4 1 2	U 2 2 2	44	P	S 0 1									
4 1 3	U 2 2 3	44	P	S 0 1									
4 1 4	U 2 2 5	44	P	S 0 1									
4 1 5	U 2 2 6	1,146	P	S 0 1									
4 1 6	U 2 2 7	44	P	S 0 1									
4 1 7	U 2 2 8	44	P	S 0 1									
4 1 8	U 2 3 4	44	P	S 0 1									
4 1 9	U 2 3 5	44	P	S 0 1									
4 2 0	U 2 3 6	44	P	S 0 1									
4 2 1	U 2 3 7	44	P	S 0 1									
4 2 2	U 2 3 8	44	P	S 0 1									
4 2 3	U 2 3 9	88	P	S 0 1									
4 2 4	U 2 4 0	44	P	S 0 1									
4 2 5	U 2 4 3	44	P	S 0 1									
4 2 6	U 2 4 4	44	P	S 0 1									
4 2 7	U 2 4 6	44	P	S 0 1									
4 2 8	U 2 4 7	44	P	S 0 1									
4 2 9	U 2 4 8	44	P	S 0 1									

9. Descriptions of Hazardous Wastes (Continued. Use the Additional Sheet(s) as necessary; number pages as 5 a, etc.)

Line Number			A. EPA Hazardous Waste No. (Enter code)				B. Estimated Annual Quantity of Waste	C. Unit of Measure (Enter code)	D. PROCESSES (1) PROCESS CODES (Enter code)									(2) PROCESS DESCRIPTION (If a code is not entered in D(1))
Technical Area 54, West (Continued)																		
4	3	0	U	2	4	9	44	P	S	0	1							
4	3	1	U	2	7	1	44	P	S	0	1							
4	3	2	U	2	7	8	44	P	S	0	1							
4	3	3	U	2	7	9	44	P	S	0	1							
4	3	4	U	2	8	0	44	P	S	0	1							
4	3	5	U	3	2	8	44	P	S	0	1							
4	3	6	U	3	5	3	44	P	S	0	1							
4	3	7	U	3	5	9	44	P	S	0	1							
4	3	8	U	3	6	4	44	P	S	0	1							
4	3	9	U	3	6	7	44	P	S	0	1							
4	4	0	U	3	7	2	44	P	S	0	1							
4	4	1	U	3	7	3	44	P	S	0	1							
4	4	2	U	3	8	7	44	P	S	0	1							
4	4	3	U	3	8	9	44	P	S	0	1							
4	4	4	U	3	9	4	44	P	S	0	1							
4	4	5	U	3	9	5	44	P	S	0	1							
4	4	6	U	4	0	4	44	P	S	0	1							
4	4	7	U	4	0	9	44	P	S	0	1							
4	4	8	U	4	1	0	44	P	S	0	1							
4	4	9	U	4	1	1	44	P	S	0	1							

9. Descriptions of Hazardous Wastes (Continued. Use the Additional Sheet(s) as necessary; number pages as 5 a, etc.)

Line Number	A. EPA Hazardous Waste No. (Enter code)				B. Estimated Annual Quantity of Waste	C. Unit of Measure (Enter code)	D. PROCESSES (1) PROCESS CODES (Enter code)									D. PROCESSES (2) PROCESS DESCRIPTION (If a code is not entered in D(1))
Technical Area 54, Material Disposal Area H (Shaft 9) [a]																
1	D	0	0	3	0	P	D	8	0							
2																
3																
4																
5																
6																
7																
8																
9																
10																
11																
12																
13																
14																
15																
16																
17																
18																
19																
20																
21																
22																
23																
24																
25																
26																
27																
28																
29																
30																
31																
32																
33																
34																
35																
36																
37																
38																
39																

[b] To be closed in accordance with Code of Federal Regulations (CFR), Title 40, Part 265, Subpart G. Permitted status is not requested.

9. Descriptions of Hazardous Wastes (Continued. Use the Additional Sheet(s) as necessary; number pages as 5 a, etc.)

Line Number	A. EPA Hazardous Waste No. (Enter code)					B. Estimated Annual Quantity of Waste	C. Unit of Measure (Enter code)	D. PROCESSES (1) PROCESS CODES (Enter code)									(2) PROCESS DESCRIPTION (If a code is not entered in D(1))
Technical Area 55																	
	1	D	0	0	1	75,000	P	S	0	1							
	2	D	0	0	2	150,000	P	S	0	1	S	0	2	T	0	4	
	3	D	0	0	3	42,000	P	S	0	1							
	4	D	0	0	4	5,000	P	S	0	1	S	0	2	T	0	4	
	5	D	0	0	5	11,000	P	S	0	1	S	0	2	T	0	4	
	6	D	0	0	6	400,500	P	S	0	1	S	0	2	T	0	4	
	7	D	0	0	7	605,000	P	S	0	1	S	0	2	T	0	4	
	8	D	0	0	8	900,000	P	S	0	1	S	0	2	T	0	4	
	9	D	0	0	9	26,000	P	S	0	1	S	0	2	T	0	4	
1	0	D	0	1	0	2,500	P	S	0	1	S	0	2	T	0	4	
1	1	D	0	1	1	11,000	P	S	0	1	S	0	2	T	0	4	
1	2	D	0	1	2	1,000	P	S	0	1				T	0	4	
1	3	D	0	1	8	4,500	P	S	0	1				T	0	4	
1	4	D	0	1	9	4,500	P	S	0	1				T	0	4	
1	5	D	0	2	1	4,500	P	S	0	1				T	0	4	
1	6	D	0	2	2	1,500	P	S	0	1				T	0	4	
1	7	D	0	2	7	1,500	P	S	0	1				T	0	4	
1	8	D	0	2	8	2,500	P	S	0	1				T	0	4	
1	9	D	0	3	0	1,500	P	S	0	1				T	0	4	
2	0	D	0	3	2	1,500	P	S	0	1				T	0	4	
2	1	D	0	3	3	1,500	P	S	0	1				T	0	4	
2	2	D	0	3	4	1,500	P	S	0	1				T	0	4	
2	3	D	0	3	5	12,000	P	S	0	1				T	0	4	
2	4	D	0	3	6	1,500	P	S	0	1				T	0	4	
2	5	D	0	3	7	1,500	P	S	0	1				T	0	4	
2	6	D	0	3	8	1,500	P	S	0	1				T	0	4	
2	7	D	0	3	9	11,000	P	S	0	1				T	0	4	
2	8	D	0	4	0	11,000	P	S	0	1				T	0	4	
2	9	D	0	4	2	1,500	P	S	0	1				T	0	4	
3	0	D	0	4	3	1,500	P	S	0	1				T	0	4	
3	1	F	0	0	1	110,000	P	S	0	1							
3	2	F	0	0	2	110,000	P	S	0	1							
3	3	F	0	0	3	110,000	P	S	0	1							
3	4	F	0	0	5	110,000	P	S	0	1							
3	5	F	0	0	6	500	P	S	0	1							
3	6	F	0	0	7	500	P	S	0	1							
3	7	F	0	0	9	500	P	S	0	1							
3	8	P	0	0	3	1,500	P	S	0	1							
3	9	P	0	1	2	1,500	P	S	0	1							

9. Descriptions of Hazardous Wastes (Continued. Use the Additional Sheet(s) as necessary; number pages as 5 a, etc.)

Line Number	*A. EPA Hazardous Waste No. (Enter code)*		*B. Estimated Annual Quantity of Waste*	*C. Unit of Measure (Enter code)*	*D. PROCESSES*												
					(1) PROCESS CODES (Enter code)												*(2) PROCESS DESCRIPTION (If a code is not entered in D(1))*
Technical Area 55 (Continued)																	
4 0	P 0	1 5	6,000	P	S	0	1										
4 1	P 0	2 9	1,500	P	S	0	1										
4 2	P 0	3 0	1,500	P	S	0	1										
4 3	P 0	3 1	1,500	P	S	0	1										
4 4	P 0	3 8	1,500	P	S	0	1										
4 5	P 0	5 6	3,000	P	S	0	1										
4 6	P 0	6 3	1,500	P	S	0	1										
4 7	P 0	6 8	1,500	P	S	0	1										
4 8	P 0	7 3	1,500	P	S	0	1										
4 9	P 0	7 6	1,500	P	S	0	1										
5 0	P 0	7 8	1,500	P	S	0	1										
5 1	P 0	9 5	1,500	P	S	0	1										
5 2	P 0	9 6	1,500	P	S	0	1										
5 3	P 0	9 8	1,500	P	S	0	1										
5 4	P 0	9 9	500	P	S	0	1										
5 5	P 1	0 6	1,500	P	S	0	1										
5 6	P 1	1 3	1,500	P	S	0	1										
5 7	P 1	2 0	1,500	P	S	0	1										
5 8	U 0	0 1	3,000	P	S	0	1										
5 9	U 0	0 2	1,500	P	S	0	1										
6 0	U 0	0 3	1,500	P	S	0	1										
6 1	U 0	1 2	1,500	P	S	0	1										
6 2	U 0	1 9	3,000	P	S	0	1										
6 3	U 0	2 2	1,500	P	S	0	1										
6 4	U 0	2 9	1,500	P	S	0	1										
6 5	U 0	3 1	1,500	P	S	0	1										
6 6	U 0	3 7	1,500	P	S	0	1										
6 7	U 0	4 4	1,500	P	S	0	1										
6 8	U 0	4 5	1,500	P	S	0	1										
6 9	U 0	5 2	1,500	P	S	0	1										
7 0	U 0	5 6	1,500	P	S	0	1										
7 1	U 0	5 7	1,500	P	S	0	1										
7 2	U 0	7 5	1,500	P	S	0	1										
7 3	U 0	7 7	1,500	P	S	0	1										
7 4	U 0	8 0	6,000	P	S	0	1										
7 5	U 1	0 3	500	P	S	0	1										
7 6	U 1	0 8	1,500	P	S	0	1										
7 7	U 1	1 2	1,500	P	S	0	1										
7 8	U 1	1 5	1,500	P	S	0	1										

9. Descriptions of Hazardous Wastes (Continued. Use the Additional Sheet(s) as necessary; number pages as 5 a, etc.)

Line Number	A. EPA Hazardous Waste No. (Enter code)						B. Estimated Annual Quantity of Waste	C. Unit of Measure (Enter code)	D. PROCESSES (1) PROCESS CODES (Enter code)									D. PROCESSES (2) PROCESS DESCRIPTION (If a code is not entered in D(1))
Technical Area 55 (Continued)																		
	7	9	U	1	1	7	1,500	P	S	0	1							
	8	0	U	1	2	1	1,500	P	S	0	1							
	8	1	U	1	2	2	1,500	P	S	0	1							
	8	2	U	1	2	3	1,500	P	S	0	1							
	8	3	U	1	3	1	1,500	P	S	0	1							
	8	4	U	1	3	3	1,500	P	S	0	1							
	8	5	U	1	3	4	6,000	P	S	0	1							
	8	6	U	1	3	5	1,500	P	S	0	1							
	8	7	U	1	4	0	1,500	P	S	0	1							
	8	8	U	1	4	4	1,500	P	S	0	1							
	8	9	U	1	5	1	6,000	P	S	0	1							
	9	0	U	1	5	4	6,000	P	S	0	1							
	9	1	U	1	5	9	6,000	P	S	0	1							
	9	2	U	1	6	0	1,500	P	S	0	1							
	9	3	U	1	6	1	1,500	P	S	0	1							
	9	4	U	1	6	5	1,500	P	S	0	1							
	9	5	U	1	6	9	1,500	P	S	0	1							
	9	6	U	1	8	8	1,500	P	S	0	1							
	9	7	U	1	9	0	1,500	P	S	0	1							
	9	8	U	1	9	6	1,500	P	S	0	1							
	9	9	U	2	0	4	1,500	P	S	0	1							
1	0	0	U	2	1	0	6,000	P	S	0	1							
1	0	1	U	2	1	1	6,000	P	S	0	1							
1	0	2	U	2	1	3	1,500	P	S	0	1							
1	0	3	U	2	1	6	1,500	P	S	0	1							
1	0	4	U	2	1	8	1,500	P	S	0	1							
1	0	5	U	2	1	9	1,500	P	S	0	1							
1	0	6	U	2	2	0	6,000	P	S	0	1							
1	0	7	U	2	2	5	1,500	P	S	0	1							
1	0	8	U	2	2	6	6,000	P	S	0	1							
1	0	9	U	2	2	7	1,500	P	S	0	1							
1	1	0	U	2	2	8	1,500	P	S	0	1							
1	1	1	U	2	3	9	1,500	P	S	0	1							
1	1	2	U	2	4	6	1,500	P	S	0	1							
1	1	3																
1	1	4																
1	1	5																
1	1	6																
1	1	7																

9. Descriptions of Hazardous Wastes (Continued. Use the Additional Sheet(s) as necessary; number pages as 5 a, etc.)

Line Number		A. EPA Hazardous Waste No. (Enter code)				B. Estimated Annual Quantity of Waste	C. Unit of Measure (Enter code)	D. PROCESSES (1) PROCESS CODES (Enter code)									(2) PROCESS DESCRIPTION (If a code is not entered in D(1))
Technical Area 63																	
	1	D	0	0	1	3300	P	S	0	1							
	2	D	0	0	2	3950	P	S	0	1							
	3	D	0	0	3	1850	P	S	0	1							
	4	D	0	0	4	25250	P	S	0	1							
	5	D	0	0	5	820	P	S	0	1							
	6	D	0	0	6	5150	P	S	0	1							
	7	D	0	0	7	37750	P	S	0	1							
	8	D	0	0	8	54000	P	S	0	1							
	9	D	0	0	9	1000	P	S	0	1							
1	0	D	0	1	0	450	P	S	0	1							
1	1	D	0	1	1	25400	P	S	0	1							
1	2	D	0	1	2	180	P	S	0	1							
1	3	D	0	1	3	40	P	S	0	1							
1	4	D	0	1	4	40	P	S	0	1							
1	5	D	0	1	5	70	P	S	0	1							
1	6	D	0	1	6	40	P	S	0	1							
1	7	D	0	1	7	40	P	S	0	1							
1	8	D	0	1	8	300	P	S	0	1							
1	9	D	0	1	9	250	P	S	0	1							
2	0	D	0	2	0	300	P	S	0	1							
2	1	D	0	2	1	150	P	S	0	1							
2	2	D	0	2	2	330	P	S	0	1							
2	3	D	0	2	3	40	P	S	0	1							
2	4	D	0	2	4	40	P	S	0	1							
2	5	D	0	2	5	40	P	S	0	1							
2	6	D	0	2	6	40	P	S	0	1							
2	7	D	0	2	7	220	P	S	0	1							
2	8	D	0	2	8	400	P	S	0	1							
2	9	D	0	2	9	70	P	S	0	1							
3	0	D	0	3	0	300	P	S	0	1							
3	1	D	0	3	1	220	P	S	0	1							
3	2	D	0	3	2	290	P	S	0	1							
3	3	D	0	3	3	290	P	S	0	1							
3	4	D	0	3	4	290	P	S	0	1							
3	5	D	0	3	5	300	P	S	0	1							
3	6	D	0	3	6	190	P	S	0	1							
3	7	D	0	3	7	70	P	S	0	1							
3	8	D	0	3	8	140	P	S	0	1							
3	9	D	0	3	9	200	P	S	0	1							

9. Descriptions of Hazardous Wastes (Continued. Use the Additional Sheet(s) as necessary; number pages as 5 a, etc.)

Line Number	*A. EPA Hazardous Waste No. (Enter code)*	*B. Estimated Annual Quantity of Waste*	*C. Unit of Measure (Enter code)*	*D. PROCESSES*													
				(1) PROCESS CODES (Enter code)													*(2) PROCESS DESCRIPTION (If a code is not entered in D(1))*
Technical Area 63 (Continued)																	
4 0	D 0 4 0	250	P	S	0	1											
4 1	D 0 4 1	170	P	S	0	1											
4 2	D 0 4 2	220	P	S	0	1											
4 3	D 0 4 3	250	P	S	0	1											
4 4	F 0 0 1	6410	P	S	0	1											
4 5	F 0 0 2	3450	P	S	0	1											
4 6	F 0 0 3	2850	P	S	0	1											
4 7	F 0 0 4	350	P	S	0	1											
4 8	F 0 0 5	3250	P	S	0	1											
4 9	F 0 0 6	70	P	S	0	1											
5 0	F 0 0 7	180	P	S	0	1											
5 1	F 0 0 8	70	P	S	0	1											
5 2	F 0 0 9	80	P	S	0	1											
5 3	F 0 1 0	40	P	S	0	1											
5 4	F 0 1 1	40	P	S	0	1											
5 5	F 0 1 2	40	P	S	0	1											
5 6	F 0 1 9	40	P	S	0	1											
5 7	F 0 2 0	40	P	S	0	1											
5 8	F 0 2 1	40	P	S	0	1											
5 9	F 0 2 2	40	P	S	0	1											
6 0	F 0 2 3	40	P	S	0	1											
6 1	F 0 2 4	40	P	S	0	1											
6 2	F 0 2 5	40	P	S	0	1											
6 3	F 0 2 6	40	P	S	0	1											
6 4	F 0 2 7	40	P	S	0	1											
6 5	F 0 2 8	40	P	S	0	1											
6 6	F 0 3 2	40	P	S	0	1											
6 7	F 0 3 4	40	P	S	0	1											
6 8	F 0 3 5	40	P	S	0	1											
6 9	F 0 3 7	40	P	S	0	1											
7 0	F 0 3 8	40	P	S	0	1											
7 1	F 0 3 9	40	P	S	0	1											
7 2	K 0 4 4	220	P	S	0	1											
7 3	K 0 4 5	40	P	S	0	1											
7 4	K 0 4 6	40	P	S	0	1											
7 5	K 0 4 7	40	P	S	0	1											
7 6	K 0 8 4	50	P	S	0	1											
7 7	K 1 0 1	50	P	S	0	1											
7 8	K 1 0 2	50	P	S	0	1											

9. Descriptions of Hazardous Wastes (Continued. Use the Additional Sheet(s) as necessary; number pages as 5 a, etc.)

Line Number	A. EPA Hazardous Waste No. (Enter code)	B. Estimated Annual Quantity of Waste	C. Unit of Measure (Enter code)	D. PROCESSES (1) PROCESS CODES (Enter code)													D. PROCESSES (2) PROCESS DESCRIPTION (If a code is not entered in D(1))
Technical Area 63 (Continued)																	
7 9	P 0 0 1	40	P	S	0	1											
8 0	P 0 0 2	40	P	S	0	1											
8 1	P 0 0 3	40	P	S	0	1											
8 2	P 0 0 4	40	P	S	0	1											
8 3	P 0 0 5	40	P	S	0	1											
8 4	P 0 0 6	40	P	S	0	1											
8 5	P 0 0 7	40	P	S	0	1											
8 6	P 0 0 8	40	P	S	0	1											
8 7	P 0 0 9	40	P	S	0	1											
8 8	P 0 1 0	40	P	S	0	1											
8 9	P 0 1 1	40	P	S	0	1											
9 0	P 0 1 2	40	P	S	0	1											
9 1	P 0 1 3	40	P	S	0	1											
9 2	P 0 1 4	40	P	S	0	1											
9 3	P 0 1 5	40	P	S	0	1											
9 4	P 0 1 6	40	P	S	0	1											
9 5	P 0 1 7	40	P	S	0	1											
9 6	P 0 1 8	40	P	S	0	1											
9 7	P 0 2 0	40	P	S	0	1											
9 8	P 0 2 1	40	P	S	0	1											
9 9	P 0 2 2	40	P	S	0	1											
1 0 0	P 0 2 3	40	P	S	0	1											
1 0 1	P 0 2 4	40	P	S	0	1											
1 0 2	P 0 2 6	40	P	S	0	1											
1 0 3	P 0 2 7	40	P	S	0	1											
1 0 4	P 0 2 8	40	P	S	0	1											
1 0 5	P 0 2 9	40	P	S	0	1											
1 0 6	P 0 3 0	40	P	S	0	1											
1 0 7	P 0 3 1	40	P	S	0	1											
1 0 8	P 0 3 3	40	P	S	0	1											
1 0 9	P 0 3 4	40	P	S	0	1											
1 1 0	P 0 3 6	40	P	S	0	1											
1 1 1	P 0 3 7	40	P	S	0	1											
1 1 2	P 0 3 8	40	P	S	0	1											
1 1 3	P 0 3 9	40	P	S	0	1											
1 1 4	P 0 4 0	40	P	S	0	1											
1 1 5	P 0 4 1	40	P	S	0	1											
1 1 6	P 0 4 2	40	P	S	0	1											
1 1 7	P 0 4 3	40	P	S	0	1											

9. Descriptions of Hazardous Wastes (Continued. Use the Additional Sheet(s) as necessary; number pages as 5 a, etc.)

Line Number	A. EPA Hazardous Waste No. (Enter code)	B. Estimated Annual Quantity of Waste	C. Unit of Measure (Enter code)	D. PROCESSES (1) PROCESS CODES (Enter code)													D. PROCESSES (2) PROCESS DESCRIPTION (If a code is not entered in D(1))
Technical Area 63 (Continued)																	
1 1 8	P 0 4 4	40	P	S	0	1											
1 1 9	P 0 4 5	40	P	S	0	1											
1 2 0	P 0 4 6	40	P	S	0	1											
1 2 1	P 0 4 7	40	P	S	0	1											
1 2 2	P 0 4 8	40	P	S	0	1											
1 2 3	P 0 4 9	40	P	S	0	1											
1 2 4	P 0 5 0	40	P	S	0	1											
1 2 5	P 0 5 1	40	P	S	0	1											
1 2 6	P 0 5 4	40	P	S	0	1											
1 2 7	P 0 5 6	40	P	S	0	1											
1 2 8	P 0 5 7	40	P	S	0	1											
1 2 9	P 0 5 8	40	P	S	0	1											
1 3 0	P 0 5 9	40	P	S	0	1											
1 3 1	P 0 6 0	40	P	S	0	1											
1 3 2	P 0 6 2	40	P	S	0	1											
1 3 3	P 0 6 3	40	P	S	0	1											
1 3 4	P 0 6 4	40	P	S	0	1											
1 3 5	P 0 6 5	40	P	S	0	1											
1 3 6	P 0 6 6	40	P	S	0	1											
1 3 7	P 0 6 7	40	P	S	0	1											
1 3 8	P 0 6 8	40	P	S	0	1											
1 3 9	P 0 6 9	40	P	S	0	1											
1 4 0	P 0 7 0	40	P	S	0	1											
1 4 1	P 0 7 1	40	P	S	0	1											
1 4 2	P 0 7 2	40	P	S	0	1											
1 4 3	P 0 7 3	40	P	S	0	1											
1 4 4	P 0 7 4	40	P	S	0	1											
1 4 5	P 0 7 5	40	P	S	0	1											
1 4 6	P 0 7 6	40	P	S	0	1											
1 4 7	P 0 7 7	40	P	S	0	1											
1 4 8	P 0 7 8	40	P	S	0	1											
1 4 9	P 0 8 1	40	P	S	0	1											
1 5 0	P 0 8 2	40	P	S	0	1											
1 5 1	P 0 8 4	40	P	S	0	1											
1 5 2	P 0 8 5	40	P	S	0	1											
1 5 3	P 0 8 7	40	P	S	0	1											
1 5 4	P 0 8 8	40	P	S	0	1											
1 5 5	P 0 8 9	40	P	S	0	1											
1 5 6	P 0 9 2	40	P	S	0	1											

9. Descriptions of Hazardous Wastes (Continued. Use the Additional Sheet(s) as necessary; number pages as 5 a, etc.)

Line Number	A. EPA Hazardous Waste No. (Enter code)	B. Estimated Annual Quantity of Waste	C. Unit of Measure (Enter code)	D. PROCESSES (1) PROCESS CODES (Enter code)											D. PROCESSES (2) PROCESS DESCRIPTION (If a code is not entered in D(1))
Technical Area 63 (Continued)															
157	P093	40	P	S	0	1									
158	P094	40	P	S	0	1									
159	P095	40	P	S	0	1									
160	P096	40	P	S	0	1									
161	P097	40	P	S	0	1									
162	P098	40	P	S	0	1									
163	P099	40	P	S	0	1									
164	P101	40	P	S	0	1									
165	P102	40	P	S	0	1									
166	P103	40	P	S	0	1									
167	P104	40	P	S	0	1									
168	P105	40	P	S	0	1									
169	P106	40	P	S	0	1									
170	P108	40	P	S	0	1									
171	P109	40	P	S	0	1									
172	P110	40	P	S	0	1									
173	P111	40	P	S	0	1									
174	P112	40	P	S	0	1									
175	P113	40	P	S	0	1									
176	P114	40	P	S	0	1									
177	P115	40	P	S	0	1									
178	P116	40	P	S	0	1									
179	P117	40	P	S	0	1									
180	P118	40	P	S	0	1									
181	P119	40	P	S	0	1									
182	P120	40	P	S	0	1									
183	P121	40	P	S	0	1									
184	P122	40	P	S	0	1									
185	P123	40	P	S	0	1									
186	P124	40	P	S	0	1									
187	P125	40	P	S	0	1									
188	P126	40	P	S	0	1									
189	P127	40	P	S	0	1									
190	P128	40	P	S	0	1									
191	P129	40	P	S	0	1									
192	P130	40	P	S	0	1									
193	P131	40	P	S	0	1									
194	P132	40	P	S	0	1									
195	P133	40	P	S	0	1									
196	P134	40	P	S	0	1									
197	P135	40	P	S	0	1									

9. Descriptions of Hazardous Wastes (Continued. Use the Additional Sheet(s) as necessary; number pages as 5 a, etc.)

Line Number	A. EPA Hazardous Waste No. (Enter code)	B. Estimated Annual Quantity of Waste	C. Unit of Measure (Enter code)	D. PROCESSES (1) PROCESS CODES (Enter code)								D. PROCESSES (2) PROCESS DESCRIPTION (If a code is not entered in D(1))
Technical Area 63 (Continued)												
1 96	P198	40	P	S01								
1 97	P199	40	P	S01								
1 98	P201	40	P	S01								
1 99	P202	40	P	S01								
2 00	P203	40	P	S01								
2 01	P204	40	P	S01								
2 02	P205	40	P	S01								
2 03	U001	40	P	S01								
2 04	U002	70	P	S01								
2 05	U003	40	P	S01								
2 06	U004	40	P	S01								
2 07	U005	40	P	S01								
2 08	U006	40	P	S01								
2 09	U007	40	P	S01								
2 10	U008	40	P	S01								
2 11	U009	40	P	S01								
2 12	U010	40	P	S01								
2 13	U011	40	P	S01								
2 14	U012	40	P	S01								
2 15	U014	40	P	S01								
2 16	U015	40	P	S01								
2 17	U016	40	P	S01								
2 18	U017	40	P	S01								
2 19	U018	40	P	S01								
2 20	U019	40	P	S01								
2 21	U020	40	P	S01								
2 22	U021	40	P	S01								
2 23	U022	40	P	S01								
2 24	U023	40	P	S01								
2 25	U024	40	P	S01								
2 26	U025	40	P	S01								
2 27	U026	40	P	S01								
2 28	U027	40	P	S01								
2 29	U028	40	P	S01								
2 30	U029	40	P	S01								
2 31	U030	40	P	S01								
2 32	U031	40	P	S01								
2 33	U032	40	P	S01								
2 34	U033	40	P	S01								

9. Descriptions of Hazardous Wastes (Continued. Use the Additional Sheet(s) as necessary; number pages as 5 a, etc.)

Line Number	A. EPA Hazardous Waste No. (Enter code)	B. Estimated Annual Quantity of Waste	C. Unit of Measure (Enter code)	D. PROCESSES (1) PROCESS CODES (Enter code)								D. PROCESSES (2) PROCESS DESCRIPTION (If a code is not entered in D(1))
Technical Area 63 (Continued)												
235	U034	40	P	S01								
236	U034	40	P	S01								
237	U034	40	P	S01								
238	U034	40	P	S01								
239	U034	40	P	S01								
240	U034	40	P	S01								
241	U034	40	P	S01								
242	U034	40	P	S01								
243	U034	40	P	S01								
244	U034	40	P	S01								
245	U034	40	P	S01								
246	U034	40	P	S01								
247	U034	40	P	S01								
248	U034	40	P	S01								
249	U034	40	P	S01								
250	U034	40	P	S01								
251	U034	40	P	S01								
252	U034	40	P	S01								
253	U034	40	P	S01								
254	U034	40	P	S01								
255	U034	40	P	S01								
256	U034	40	P	S01								
257	U034	40	P	S01								
258	U034	40	P	S01								
259	U034	40	P	S01								
260	U034	40	P	S01								
261	U034	40	P	S01								
262	U034	40	P	S01								
263	U034	40	P	S01								
264	U034	40	P	S01								
265	U034	40	P	S01								
266	U034	40	P	S01								
267	U034	40	P	S01								
268	U034	40	P	S01								
269	U034	40	P	S01								
270	U034	40	P	S01								
271	U034	40	P	S01								
272	U034	40	P	S01								
273	U034	40	P	S01								
274	U034	40	P	S01								
275	U034	40	P	S01								

9. Descriptions of Hazardous Wastes (Continued. Use the Additional Sheet(s) as necessary; number pages as 5 a, etc.)

Line Number	A. EPA Hazardous Waste No. (Enter code)	B. Estimated Annual Quantity of Waste	C. Unit of Measure (Enter code)	D. PROCESSES (1) PROCESS CODES (Enter code)									D. PROCESSES (2) PROCESS DESCRIPTION (If a code is not entered in D(1))
Technical Area 63 (Continued)													
2	7 4 U 0 7 6	40	P	S	0	1							
2	7 5 U 0 7 7	40	P	S	0	1							
2	7 6 U 0 7 8	40	P	S	0	1							
2	7 7 U 0 7 9	40	P	S	0	1							
2	7 8 U 0 8 0	120	P	S	0	1							
2	7 9 U 0 8 1	40	P	S	0	1							
2	8 0 U 0 8 2	40	P	S	0	1							
2	8 1 U 0 8 3	40	P	S	0	1							
2	8 2 U 0 8 4	40	P	S	0	1							
2	8 3 U 0 8 5	40	P	S	0	1							
2	8 4 U 0 8 6	40	P	S	0	1							
2	8 5 U 0 8 7	40	P	S	0	1							
2	8 6 U 0 8 8	40	P	S	0	1							
2	8 7 U 0 8 9	40	P	S	0	1							
2	8 8 U 0 9 0	40	P	S	0	1							
2	8 9 U 0 9 1	40	P	S	0	1							
2	9 0 U 0 9 2	40	P	S	0	1							
2	9 1 U 0 9 3	40	P	S	0	1							
2	9 2 U 0 9 4	40	P	S	0	1							
2	9 3 U 0 9 5	40	P	S	0	1							
2	9 4 U 0 9 6	40	P	S	0	1							
2	9 5 U 0 9 7	40	P	S	0	1							
2	9 6 U 0 9 8	40	P	S	0	1							
2	9 7 U 0 9 9	40	P	S	0	1							
2	9 8 U 1 0 1	40	P	S	0	1							
2	9 9 U 1 0 2	40	P	S	0	1							
3	0 0 U 1 0 3	40	P	S	0	1							
3	0 1 U 1 0 5	40	P	S	0	1							
3	0 2 U 1 0 6	40	P	S	0	1							
3	0 3 U 1 0 7	40	P	S	0	1							
3	0 4 U 1 0 8	40	P	S	0	1							
3	0 5 U 1 0 9	40	P	S	0	1							
3	0 6 U 1 1 0	40	P	S	0	1							
3	0 7 U 1 1 1	40	P	S	0	1							
3	0 8 U 1 1 2	40	P	S	0	1							
3	0 9 U 1 1 3	40	P	S	0	1							
3	1 0 U 1 1 4	40	P	S	0	1							
3	1 1 U 1 1 5	40	P	S	0	1							
3	1 2 U 1 1 6	40	P	S	0	1							

9. Descriptions of Hazardous Wastes (Continued. Use the Additional Sheet(s) as necessary; number pages as 5 a, etc.)

Line Number	A. EPA Hazardous Waste No. (Enter code)	B. Estimated Annual Quantity of Waste	C. Unit of Measure (Enter code)	D. PROCESSES (1) PROCESS CODES (Enter code)								D. PROCESSES (2) PROCESS DESCRIPTION (If a code is not entered in D(1))
Technical Area 63 (Continued)												
3 1 3	U 1 1 7	40	P	S 0 1								
3 1 4	U 1 1 8	40	P	S 0 1								
3 1 5	U 1 1 9	40	P	S 0 1								
3 1 6	U 1 2 0	40	P	S 0 1								
3 1 7	U 1 2 1	40	P	S 0 1								
3 1 8	U 1 2 2	70	P	S 0 1								
3 1 9	U 1 2 3	40	P	S 0 1								
3 2 0	U 1 2 4	40	P	S 0 1								
3 2 1	U 1 2 5	40	P	S 0 1								
3 2 2	U 1 2 6	40	P	S 0 1								
3 2 3	U 1 2 7	40	P	S 0 1								
3 2 4	U 1 2 8	40	P	S 0 1								
3 2 5	U 1 2 9	40	P	S 0 1								
3 2 6	U 1 3 0	40	P	S 0 1								
3 2 7	U 1 3 1	40	P	S 0 1								
3 2 8	U 1 3 2	40	P	S 0 1								
3 2 9	U 1 3 3	40	P	S 0 1								
3 3 0	U 1 3 4	120	P	S 0 1								
3 3 1	U 1 3 5	40	P	S 0 1								
3 3 2	U 1 3 6	40	P	S 0 1								
3 3 3	U 1 3 7	40	P	S 0 1								
3 3 4	U 1 3 8	40	P	S 0 1								
3 3 5	U 1 4 0	40	P	S 0 1								
3 3 6	U 1 4 1	40	P	S 0 1								
3 3 7	U 1 4 2	40	P	S 0 1								
3 3 8	U 1 4 3	40	P	S 0 1								
3 3 9	U 1 4 4	40	P	S 0 1								
3 4 0	U 1 4 5	40	P	S 0 1								
3 4 1	U 1 4 6	40	P	S 0 1								
3 4 2	U 1 4 7	40	P	S 0 1								
3 4 3	U 1 4 8	40	P	S 0 1								
3 4 4	U 1 4 9	40	P	S 0 1								
3 4 5	U 1 5 0	40	P	S 0 1								
3 4 6	U 1 5 1	70	P	S 0 1								
3 4 7	U 1 5 2	40	P	S 0 1								
3 4 8	U 1 5 3	40	P	S 0 1								
3 4 9	U 1 5 4	40	P	S 0 1								
3 5 0	U 1 5 5	40	P	S 0 1								
3 5 1	U 1 5 6	40	P	S 0 1								

9. Descriptions of Hazardous Wastes (Continued. Use the Additional Sheet(s) as necessary; number pages as 5 a, etc.)

Line Number			A. EPA Hazardous Waste No. (Enter code)				B. Estimated Annual Quantity of Waste	C. Unit of Measure (Enter code)	D. PROCESSES (1) PROCESS CODES (Enter code)									(2) PROCESS DESCRIPTION (If a code is not entered in D(1))
Technical Area 63 (Continued)																		
3	5	2	U	1	5	7	40	P	S	0	1							
3	5	3	U	1	5	8	40	P	S	0	1							
3	5	4	U	1	5	9	40	P	S	0	1							
3	5	5	U	1	6	0	40	P	S	0	1							
3	5	6	U	1	6	1	40	P	S	0	1							
3	5	7	U	1	6	2	40	P	S	0	1							
3	5	8	U	1	6	3	40	P	S	0	1							
3	5	9	U	1	6	4	40	P	S	0	1							
3	6	0	U	1	6	5	40	P	S	0	1							
3	6	1	U	1	6	6	40	P	S	0	1							
3	6	2	U	1	6	7	40	P	S	0	1							
3	6	3	U	1	6	8	40	P	S	0	1							
3	6	4	U	1	6	9	40	P	S	0	1							
3	6	5	U	1	7	0	40	P	S	0	1							
3	6	6	U	1	7	1	40	P	S	0	1							
3	6	7	U	1	7	2	40	P	S	0	1							
3	6	8	U	1	7	3	40	P	S	0	1							
3	6	9	U	1	7	4	40	P	S	0	1							
3	7	0	U	1	7	6	40	P	S	0	1							
3	7	1	U	1	7	7	40	P	S	0	1							
3	7	2	U	1	7	8	40	P	S	0	1							
3	7	3	U	1	7	9	40	P	S	0	1							
3	7	4	U	1	8	0	40	P	S	0	1							
3	7	5	U	1	8	1	40	P	S	0	1							
3	7	6	U	1	8	2	40	P	S	0	1							
3	7	7	U	1	8	3	40	P	S	0	1							
3	7	8	U	1	8	4	40	P	S	0	1							
3	7	9	U	1	8	5	40	P	S	0	1							
3	8	0	U	1	8	6	40	P	S	0	1							
3	8	1	U	1	8	7	40	P	S	0	1							
3	8	2	U	1	8	8	40	P	S	0	1							
3	8	3	U	1	8	9	40	P	S	0	1							
3	8	4	U	1	9	0	40	P	S	0	1							
3	8	5	U	1	9	1	40	P	S	0	1							
3	8	6	U	1	9	2	40	P	S	0	1							
3	8	7	U	1	9	3	40	P	S	0	1							
3	8	8	U	1	9	4	40	P	S	0	1							
3	8	9	U	1	9	6	40	P	S	0	1							
3	9	0	U	1	9	7	40	P	S	0	1							

9. Descriptions of Hazardous Wastes (Continued. Use the Additional Sheet(s) as necessary; number pages as 5 a, etc.)

Line Number	A. EPA Hazardous Waste No. (Enter code)	B. Estimated Annual Quantity of Waste	C. Unit of Measure (Enter code)	D. PROCESSES (1) PROCESS CODES (Enter code)													D. PROCESSES (2) PROCESS DESCRIPTION (If a code is not entered in D(1))
Technical Area 63 (Continued)																	
3 9 1	U 2 0 0	40	P	S 0 1													
3 9 2	U 2 0 1	40	P	S 0 1													
3 9 3	U 2 0 2	40	P	S 0 1													
3 9 4	U 2 0 3	40	P	S 0 1													
3 9 5	U 2 0 4	40	P	S 0 1													
3 9 6	U 2 0 5	40	P	S 0 1													
3 9 7	U 2 0 6	40	P	S 0 1													
3 9 8	U 2 0 7	40	P	S 0 1													
3 9 9	U 2 0 8	40	P	S 0 1													
4 0 0	U 2 0 9	40	P	S 0 1													
4 0 1	U 2 1 0	40	P	S 0 1													
4 0 2	U 2 1 1	40	P	S 0 1													
4 0 3	U 2 1 3	40	P	S 0 1													
4 0 4	U 2 1 4	40	P	S 0 1													
4 0 5	U 2 1 5	40	P	S 0 1													
4 0 6	U 2 1 6	40	P	S 0 1													
4 0 7	U 2 1 7	40	P	S 0 1													
4 0 8	U 2 1 8	40	P	S 0 1													
4 0 9	U 2 1 9	40	P	S 0 1													
4 1 0	U 2 2 0	70	P	S 0 1													
4 1 1	U 2 2 1	40	P	S 0 1													
4 1 2	U 2 2 2	40	P	S 0 1													
4 1 3	U 2 2 3	40	P	S 0 1													
4 1 4	U 2 2 5	40	P	S 0 1													
4 1 5	U 2 2 6	70	P	S 0 1													
4 1 6	U 2 2 7	40	P	S 0 1													
4 1 7	U 2 2 8	70	P	S 0 1													
4 1 8	U 2 3 4	40	P	S 0 1													
4 1 9	U 2 3 5	40	P	S 0 1													
4 2 0	U 2 3 6	40	P	S 0 1													
4 2 1	U 2 3 7	40	P	S 0 1													
4 2 2	U 2 3 8	40	P	S 0 1													
4 2 3	U 2 3 9	70	P	S 0 1													
4 2 4	U 2 4 0	40	P	S 0 1													
4 2 5	U 2 4 3	40	P	S 0 1													
4 2 6	U 2 4 4	40	P	S 0 1													
4 2 7	U 2 4 6	40	P	S 0 1													
4 2 8	U 2 4 7	40	P	S 0 1													
4 2 9	U 2 4 8	40	P	S 0 1													

9. Descriptions of Hazardous Wastes (Continued. Use the Additional Sheet(s) as necessary; number pages as 5 a, etc.)

Line Number	A. EPA Hazardous Waste No. (Enter code)	B. Estimated Annual Quantity of Waste	C. Unit of Measure (Enter code)	D. PROCESSES (1) PROCESS CODES (Enter code)									(2) PROCESS DESCRIPTION (If a code is not entered in D(1))
Technical Area 63 (Continued)													
430	U249	40	P	S01									
431	U271	40	P	S01									
432	U278	40	P	S01									
433	U279	40	P	S01									
434	U280	40	P	S01									
435	U328	40	P	S01									
436	U353	40	P	S01									
437	U359	40	P	S01									
438	U364	40	P	S01									
439	U367	40	P	S01									
440	U372	40	P	S01									
441	U373	40	P	S01									
442	U387	40	P	S01									
443	U389	40	P	S01									
444	U394	40	P	S01									
445	U395	40	P	S01									
446	U404	40	P	S01									
447	U409	40	P	S01									
448	U410	40	P	S01									
449	U411	40	P	S01									

10. Map

Attach to this application a topographic map, or other equivalent map, of the area extending to at least one mile beyond property boundaries. The map must show the outline of the facility, the location of each of its existing intake and discharge structures, each of its hazardous waste treatment, storage, or disposal facilities, and each well where it injects fluids underground. Include all springs, rivers, and other surface water bodies in this map area. See instructions for precise requirements.

11. Facility Drawing

All existing facilities must include a scale drawing of the facility (see instructions for more detail).

12. Photographs

All existing facilities must include photographs (aerial or ground-level) that clearly delineate all existing structures; existing storage, treatment and disposal areas; and sites of future storage, treatment or disposal areas (see instructions for more detail).

13. Comments

EXPLANATION OF PROCESS CODE LISTING

AND DESIGN CAPACITY AT TECHNICAL AREA (TA) 63

Description	Capacity (pounds per treatment)	Associated Structure No./Area
Line 1 S01 Container Storage Unit		
Container storage unit for RCRA[1]-regulated waste	105,875	TA-63-145, TA-63-149, TA-63-150, TA-63-151, TA-63-152, TA-63-153, TA-63-154, TA-63-155, TA-63-156, TA-63-157
TOTAL S01	**105,875**	

[1] RCRA is the Resource Conservation and Recovery Act.

Topographical Map Showing the Location of the RCRA-Regulated Waste Management Unit at Technical Area (TA) 63

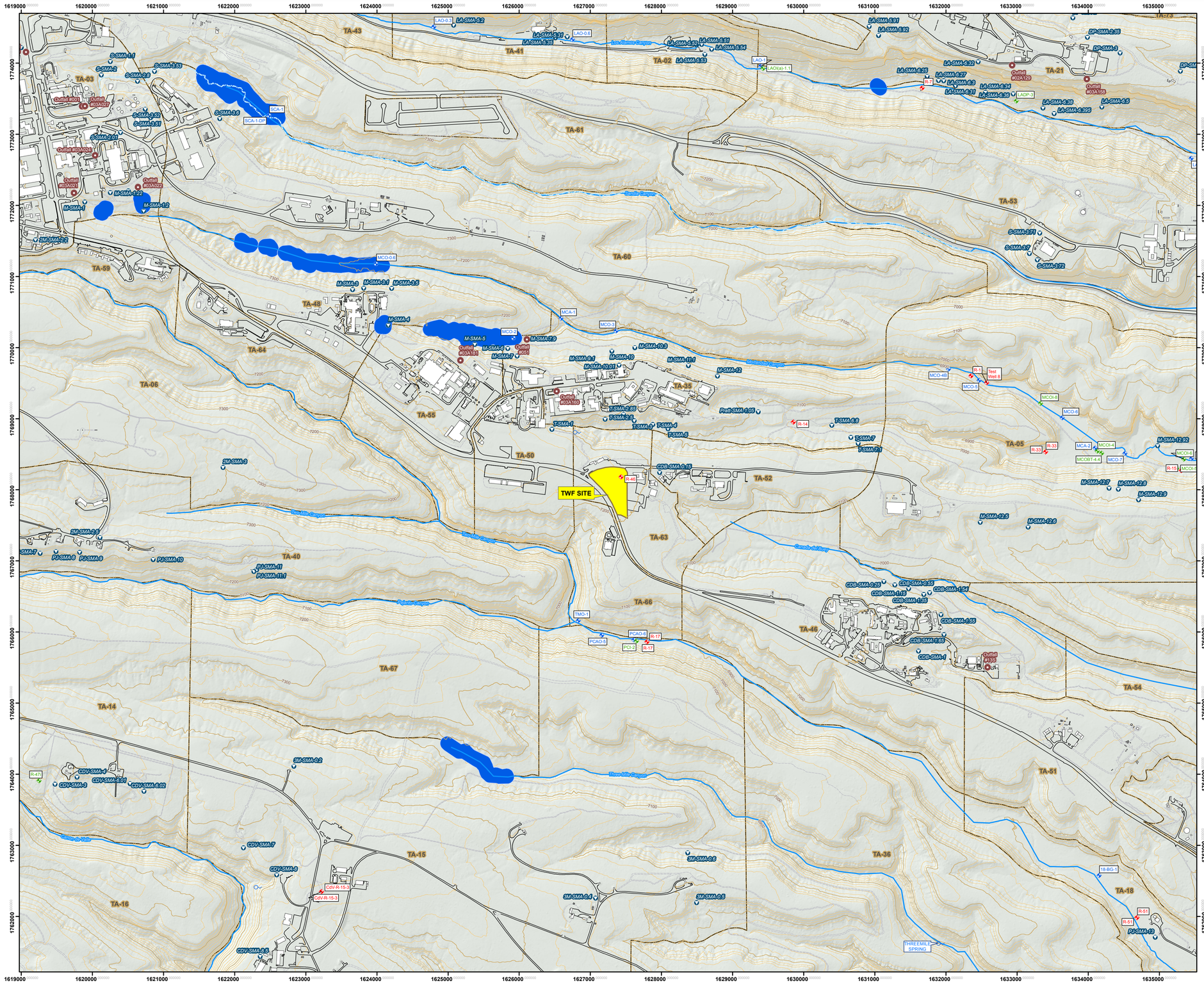

Legend

2011 monitoring well

- Alluvial
- Intermediate
- Regional
- NPDES Permitted Outfalls
- Site Monitoring Areas (SMAs)
- Springs
- Drainage
- Streams, Perennial
- Contours, 20 ft
- Contours, 100 ft
- Roads, paved
- Roads, dirt
- Wetlands
- Structures
- RCRA-Regulated Waste Management Unit, TWF site
- TAs

Kilometers

0.25 0.125 0 0.25 0.5

Miles

0.25 0.125 0 0.25 0.5

State Plane Cordinate System, New Mexico Central Zone.
1983 North American Datum.
Map Units in feet.

Grid provides NM State Plane coordinates in feet.
Grid interval: 1000 ft

N W E S

DISCLAIMER: This map was created for work processes associated with RCRA Permit.

All other uses for this map should be confirmed with ENV-RCRA staff.

GIS: WES-EDA, GIS Team, Kathryn Bennett
Date: 13-July, 2011
Revision: 0
Revised:
Map Number: 11-0055-17_TA39_071311

Attachment B

Storage Building Floor Coating

AMERON INTERNATIONAL
Performance Coatings & Finishes

Amerlock® Sealer

100% solids epoxy sealer

Product Data/ Application Instructions

- Solventless sealer and tiecoat
- Penetrates rust and and adheres to aged coatings
- Compatible with aged coatings
- Accepts broad range of topcoats
- Compatible with damp substrates
- Resists high humidity and moisture
- Primer for concrete surfaces
- Curing compound for new concrete

Typical Uses

Amerlock Sealer is a penetrating sealer for marginally prepared steel and aged coatings. Its low viscosity and excellent wetting properties allow it to penetrate rust and discontinuities in existing coatings which in turn improves adhesion of subsequent topcoats. Amerlock Sealer has excellent resistance to corrosive environments.

Amerlock Sealer is also used as a concrete primer/sealer and as a concrete curing compound. When used as a concrete curing compound, Amerlock Sealer is applied to concrete slabs immediately after pouring and finishing, or to formed concrete surfaces as soon as the forms are removed (three days after initial pour). Concrete must cure a minimum of 14 days (total) prior to topcoating with epoxy surfacers or coatings.

Typical Systems Using Amerolock Sealer

First Coat	Second Coat	Third Coat
Amerlock Sealer	Amercoat 370, 385, or Amerlock 2, 400	Amercoat 450 Series, Amershield, or none
Amerlock Sealer	Nu-Klad 100A, 110C, 120A, or PSX 758	Amerlock 2, 400 Amershield, or or none

Physical Data

Finish	Gloss	
Color	Clear	
Components	2	
Curing mechanism	Chemical reaction	
Volume solids (calculated)	100%	
Dry film thickness per coat	1.5 mils (38 microns)	
Coats	1 or 2	
Theoretical coverage	ft^2/gal	m^2/L
1.5 mils (38 microns)	1069	27.1
VOC (theoretical)	lb/gal	g/L
mixed	0.0	0.0
Temperature resistance, dry	°F	°C
continuous	200	93
intermittent	250	121
Flash point (SETA)	°F	°C
Amerlock Sealer resin	>212	>100
Amerlock Sealer cure	>212	>100
Amercoat 12	2	-17
Amercoat 65	81	27

Formerly Amercoat 3431

Surface Preparation

Coating performance is, in general, proportional to the degree of surface preparation. All surfaces must be clean, dry and free of all contaminants.

Amerlock Sealer is intended for less than ideal surfaces. Amerlock Sealer may be used over most types of properly prepared and tightly adhering coatings. A test patch is recommended for use over existing coatings to insure compatibility.

Steel – Remove all loose rust, dirt, moisture, grease or other contaminants from surface. Power-tool clean SSPC-SP3 or hand-tool clean SSPC-SP2. For more severe environments, dry abrasive blast SSPC-SP7. Water jetting is also acceptable.

Aluminum – Remove oil, grease or soap film with neutral detergent or emulsion cleaner. Treat with Alodine® 1200, Alumiprep® or equivalent, or power tool clean or blast lightly with fine abrasive.

Galvanizing – Remove oil or soap film with detergent or emulsion cleaner, then use zinc treatment such as Galvaprep® or equivalent or power tool clean or blast lightly with fine abrasive.

Concrete – All surfaces to be coated must be strong and sound, contain no additives or hardeners, and should not be treated with sealers or conventional curing compounds containing waxes, silicones, or silicates. New slabs (horizontal surfaces) should have a float finish or broom finish as described in ACI Specification 301. Finishing shall be within Class A tolerance, when using Amerlock Sealer as a concrete curing compound and applying epoxy surfacing. For existing slabs with a trowelled finish, see 'Primer' below.

Primer –Water-cured concrete or existing structures must be cured a minimum of 14 days and have attained 80 percent of its final strength. When cured, surface must either be prepared per ASTM D4259 or ASTM D4260 with muriatic acid using equal parts of acid to water by volume.

A suitably finished surface must have a uniform surface texture exposing fine aggregate resembling coarse sandpaper. If required, repeat acid etching or abrasive blasting until the surface texture is uniform.

Concrete surfaces cured with conventional curing compounds or contaminated with form oils must be completely cleaned by ASTM D4259. Acid etching is not acceptable, as it will not normally remove these contaminants.

Curing compound – Formed surfaces should be adequately vibrated to minimize air pockets and holes. Suitable form facing material should be used to produce a smooth form finish as described in ACI Specification 301.Do not use form release agents based on oils, which will deposit a residue on the concrete. When Amerlock Sealer is used as a curing compound the forms should be removed within three days and the Amerlock Sealer applied immediately. New concrete which will be cured with Amerlock Sealer does not require blasting or etching. Remove fins and projections from formed concrete, and ensure that all surfaces are free from oil or contaminants. Cure concrete a minimum of 14 days prior to applying epoxy surfacing. When applying epoxy surfacing the Amerlock Sealer must be roughened when maximum topcoat time is exceeded.

Apply as soon as possible after pouring and finishing the concrete.

Application Equipment

The following is a guide; suitable equipment from other manufacturers may be used. Changes in pressure, hose and tip size may be needed for proper spray characteristics.

Airless spray – Standard equipment such as Graco Bulldog Hydra-Spray or larger with a 0.13- to 0021-in. (0.38 to 0.53 mm) fluid tip.

Conventional spray – Industrial equipment such as DeVilbiss MBC or JGA spray gun with 78 or 765 air cap and "E" fluid tip, or Binks No. 18 or 62 gun with a 66 x 63 PB nozzle set up. Separate air and fluid pressure regulators, and a moisture and oil trap in the main air supply line are recommended.

Power mixer – Jiffy Mixer powered by an air or an explosion-proof electric motor.

Brush – Natural bristle. Maintain wet edge.

Roller – Use industrial roller. Level any air bubbles with bristle brush.

Application Data

Applied over	Prepared steel, or concrete, galvanizing, aluminum or aged coatings
Method	Airless or conventional spray, brush or roller
Mixing ratio (by volume)	1 part resin to 1 part cure

Pot life (minutes)

°F/°C	90/32	70/21	50/10
	35	60	100

Environmental conditions

Temperature	°F	°C
air	32 to 120	0 to 49
surface	32 to 120	0 to 49

Drying time (ASTM D1640) (hours)

°F/°C	90/32	70/21	50/10	32/0
touch	8	12	18	28
hard	22	28	36	52

Recoat/topcoat time (hours)

°F/°C	90/32	70/21	50/10	32/0
minimum	18	24	30	38
maximum[xxx]	1 month			

Thinner	Amercoat 65
Equipment cleaner	Thinner or Amercoat 12

[xxx]*Roughen surface if max recoat/topcoat time exceeded.*

Application Procedure

1. Flush equipment with thinner or Amercoat 12.
2. Add Amerlock Sealer cure to Amerlock Sealer resin. Mix thoroughly until uniformly blended.

Pot life (minutes)	°F/°C		
2 gal unit	90/32	70/21	50/10
	35	60	100

3. Thinning is not normally recommended. If needed for workability add Amercoat 65 up to ¼ pint per gallon of mixed Amerlock Sealer.
4. Apply wet coat in even parallel passes, overlapping each pass by 50%.
5. Amerlock Sealer is low in viscosity. Apply one coat at 1.5 mils or sufficient thickness to completely cover and penetrate steel. Porous surfaces may require an additional coat of Amerlock Sealer.
6. Clean all equipment with thinner or Amercoat 12 immediately after use.

On slabs, puddled areas of water must not remain. On formed surfaces no running water may be evident.

Primer - When used over acid-etched concrete apply immediately after water rinsing. Abrasive blasted concrete must be thoroughly cleaned to remove all loose material, then may be moistened with water. A damp surface aids in primer/sealer penetration into the surface.

Brush out any primer/sealer which puddles in low areas on slabs (horizontals) or runs or sags on formed surfaces (verticals) during application.

After overnight curing, coated surface may vary in appearance. Areas which appear to have no evidence of primer/sealer indicate a high porosity. In these areas, a second application is recommended. Surfaces not properly primed or sealed may result in bubbling of surfacer. Avoid thick glossy areas of Amerlock Sealer. Roughen these areas prior to topcoating.

Curing compound – When used as a curing compound, Amerlock Sealer must be applied to slabs (horizontals) immediately after the final finishing operation or upon disappearance of the "sheen" of surface moisture. On formed surfaces (verticals), apply immediately after form removal. (Forms should be removed within three days after concrete is poured.) If there is any drying or appreciable loss of moisture, spray the surface with water and allow to reach a uniform damp condition with no excess water on the surface.

Immediately after use, clean all application equipment with Amercoat 12.

Safety Precautions

Read each component's material safety data sheet before use. Mixed material has hazards of each component. Safety precautions must be strictly followed during storage, handling and use.

CAUTION – Improper use and handling of this product can be hazardous to health and cause fire or explosion.

Do not use this product without first taking all appropriate safety measures to prevent property damage and injuries. These measures may include, without limitation: implementation of proper ventilation, use of proper lamps, wearing of proper protective clothing and masks, tenting and proper separation of application areas. Consult your supervisor. Proper ventilation and protective measures must be provided during application and drying to keep spray mists and vapor concentrations within safe limits and to protect against toxic hazards. Necessary safety equipment must be used and ventilation requirements carefully observed, especially in confined or enclosed spaces, such as tank interiors and buildings.

This product is to be used by those knowledgeable about proper application methods. Ameron makes no recommendation about the types of safety measures that may need to be adopted because these depend on application environment and space, of which Ameron is unaware and over which it has no control.

If you do not fully understand these warnings and instructions or if you cannot strictly comply with them, do not use the product.

Note: Consult Code of Federal Regulations Title 29, Labor, parts 1910 and 1915 concerning occupational safety and health standards and regulations, as well as any other applicable federal, state and local regulations on safe practices in coating operations.

This product is for industrial use only. Not for residential use.

Shipping Data

Packaging unit	2-gal	
Amerlock Sealer resin	1 gal in 3-gal can	
Amerlock Sealer cure	1 gal in 1-gal can	
Shipping weight (approx)	lb	kg
2-gal unit		
Amerlock Sealer resin	13.5	6.1
Amerlock Sealer cure	11.0	5.0

Shelf life when stored indoors at 40 to 100°F (4 to 38°C)

resin and cure 1 year from shipment date

Numerical values are subject to normal manufacturing tolerances, colors and testing variances. Allow for application losses and surface irregularities.

Warranty

Ameron warrants its products to be free from defects in material and workmanship. Ameron's sole obligation and Buyer's exclusive remedy in connection with the products shall be limited, at Ameron's option, to either replacement of products not conforming to this Warranty or credit to Buyer's account in the invoiced amount of the nonconforming products. Any claim under this Warranty must be made by Buyer to Ameron in writing within five (5) days of Buyer's discovery of the claimed defect, but in no event later than the expiration of the applicable shelf life, or one year from the delivery date, whichever is earlier. Buyer's failure to notify Ameron of such nonconformance as required herein shall bar Buyer from recovery under this Warranty.

Ameron makes no other warranties concerning the product. No other warranties, whether express, implied, or statutory, such as warranties of merchantability or fitness for a particular purpose, shall apply. In no event shall Ameron be liable for consequential or incidental damages.

Any recommendation or suggestion relating to the use of the products made by Ameron, whether in its technical literature, or in response to specific inquiry, or otherwise, is based on data believed to be reliable; however, the products and information are intended for use by Buyers having requisite skill and know-how in the industry, and therefore it is for Buyer to satisfy itself of the suitability of the products for its own particular use and it shall be deemed that Buyer has done so, at its sole discretion and risk. Variation in environment, changes in procedures of use, or extrapolation of data may cause unsatisfactory results.

Limitation of Liability

Ameron's liability on any claim of any kind, including claims based upon Ameron's negligence or strict liability, for any loss or damage arising out of, connected with, or resulting from the use of the products, shall in no case exceed the purchase price allocable to the products or part thereof which give rise to the claim. **In no event shall Ameron be liable for consequential or incidental damages.**

AMERON INTERNATIONAL

Ameron U.S.A. • 13010 Morris Rd, Suite 400, Alpharetta, GA 30004 • (678) 393-0653
Ameron B.V. • J. F. Kennedylaan 7, 4191 MZ Geldermalsen, The Netherlands • (31) 345-587-587

©1999 Ameron • Printed in U.S.A. • R12/03 supersedes R12/99

PPG Amercoat

Amercoat® 114A

Epoxy filler compound

Product Data/ Application Instructions

• Filler for steel, formed concrete or concrete block

Amercoat 114A is a 100% solids epoxy filler compound to fill holes, voids and surface discontinuities in steel, formed concrete or concrete block up to one inch across as measured in their largest dimension. A single application will fill or seal most air bubbles and holes. On concrete block surfaces, Amercoat 114A provides a smooth surface in a single application for applying coatings.

• Amercoat 114A may be used to fill pits, voids, or seams in steel or concrete water tanks. For potable water tanks, topcoat with an ANSI/NSF Standard 61 - approved potable water tank lining.

Typical Uses

Steel and concrete surfaces in :

- Nuclear facilities
- Plants – fossil fuel, sewage and waste treatment, food and beverage, chemical processing
- Mills – pulp and paper, textile, steel
- Mining and metal finishing operations
- Water tanks

Typical Properties – after 7 days @ 70°F (21°C)

Mechanical

Density (ASTM D71 modified)	88.6 lbs/ft^3
Tensile strength (ASTM D412)	3000 psi
Compressive strength (ASTM C579)	12549 psi
Modulus of elasticity (ASTM C580)	9.4 x 10^5 psi

Qualifications

ANSI/NSF Standard 61 - for use in drinking water

- Maximum Surface Area / Volume - 0.033 in^2/L or maximum 1% of a 4000 gallon tank or larger
- Maximum Use Temperature - 23˚C

CLASSIFIED UL EPH
ANSI/NSF61 DRINKING WATER SYSTEM COMPONENTS
8NA1

Physical Data

Color	Off-white	
Components	2	
Curing mechanism	Chemical reaction between components	
Volume solids	100%	
Theoretical coverage 1 mil (25 microns)	ft^2/unit	
3 lb unit	406	
20 lb unit	2709	
VOC	lb/gal	g/L
mixed	0.0	0.0
Flash point (SETA)	°F	°C
114A cure	>200	93
114A resin	>200	93
Amercoat 12	2	-17
Amercoat 928	175	79

Application Data

Applied over	Prepared or primed steel, concrete, masonry block		
Surface preparation			
steel	Abrasive blast		
concrete	ASTM D4258, 4259 or 4260		
masonry	ASTM D4261		
Primer	Amerlock Sealer		
Method	Squeegee, roller, trowel, spatula		
Mixing ratio (by volume)	1.84 parts resin to 1 part cure		
		°F/°C	
	90/32	70/21	50/10
Working time (hours)	1	2$^1/_2$	4
Initial setting	9	18	36
Curing time before topcoating			
minimum	9	18	36
maximum			
with 114A	36	72	144
with 100A	72	168	336
with Amercoat 90HS	1 month		

If maximum recoat time exceeded, roughen surfaces.

Environmental conditions		
Temperature	°F	°C
material and surface	50 to 120	10 to 27

Below 65°F (18°C) workability is reduced and application more difficult. Above 80°F (27°C) working time decreases.

Amercoat 114A can be applied to surfaces as low as 50°F (10°C); although curing retarded, typical properties of cured material will not be affected.

Application under direct sunlight and rising surface temperatures can result in bubbling of filler compound by release of air or moisture from concrete. Prior to application of Amercoat 114A shade for 24 hours any concrete exposed to direct sunlight and keep shaded until after initial set. With rising surface temperatures it may be necessary to postpone application.

Equipment cleaner	Amercoat 12 or 928

Surface Preparation

Coating performance, in general, is proportional to the degree of surface preparation. Prior to coating, all surfaces must be clean, undamaged, dry and free of all contaminants, including salt deposits.

Steel – Abrasive blast SSPC-SP10. Prepare surface in accordance with Application Instructions for specific primer being used.

Concrete – Cure concrete a minimum of 14 days and until 80 percent of its physical properties have been attained before applying Amercoat 114A. Prepare surfaces according to ASTM D4258, surface cleaning; D4259, abrading; or D4260, acid etching.

Concrete block – Walls must be laid plumb and square with flush joints. Do not rake joints. All surfaces must be clean and dry following ASTM D4261.

Amerlock Sealer applied over water-cured concrete – Cure to a tack-free condition [l6 hours at 70°F (21°C)] before application of Amercoat 114A.

Apply Amercoat 114A over prepared concrete surfaces or surfaces primed with Amerlock Sealer. See primer literature.

Mixing

Amercoat 114A supplied in the correct proportions of resin and cure which must be mixed together before use. Mix only full units. Make no additions or deletions. Any deviations will inhibit curing and alter final physical properties. Do not mix more material than can used within working time: $2^1/_2$ hours at 70°F (21°C). Material which has begun to set must be discarded.

Application

Apply Amercoat 114A to the surface using a short nap paint roller or trowel. Spread and work the filler compound across surface filling voids using the American Olean KR Groutmaster epoxy floor trowel or wide bladed putty knives. Continue working filler compound across surface, applying pressure to achieve a smooth finish. Leave only a slight film above the surface plane. Filler compound should appear somewhat transparent allowing the concrete surface or concrete block texture to remain visible.

A single application will provide a suitable surface to receive Amercoat 100A epoxy surfacer or for application of a coating over concrete block. A second application may be required for complete filling and sealing of formed concrete surfaces receiving Amercoat protective coatings. Allow overnight curing at 70°F (21°C), or until first application is firm.

Do not exceed 3 days at 70°F (21°C) before second application. When making second application, use only reasonable pressure to build film thickness to approximately 5 to 10 mils above the surface plane, at the same time remove ridges left during spreading of filler compound by the application tool. Repair all holidays with Amercoat 114A before applying coating.

Cleanup

Clean all mixing equipment and application tools immediately with Amercoat 12 or Amercoat 928.

Coverage

Coverage depends upon the number and size of air bubbles or holes to be filled. The theoretical coverage per 20 pound unit on a smooth, pore-free surface is 2709 ft^2.

Curing Time Before Topcoating

	°F/°C		
	90/32	70/21	50/10
Curing time before topcoating			
minimum (hours)	9	18	36
maximum (hours)			
with 114A	36	72	144
with 100A	72	168	336
with Amercoat 90HS	1 month		

If maximum recoat time exceeded, roughen surfaces.

Shipping Data

Packaging units	3 lb	20 lb
cure	1-pt can	$^1/_2$-gal can
resin	1-qt can	$2^1/_2$-gal can
Shipping weight (approx)	3 lb	20 lb
cure	.79	5.28
resin	2.21	14.72

Shelf life when stored indoors at 40 to 100°F (4 to 38°C)
1 year from shipment date

Numerical values are subject to normal manufacturing tolerances and testing variances. Allow for application losses and surface irregularities.

This mixed product is nonphotochemically reactive as defined by the South Coast Air Quality Management District's Rule 102 or equivalent regulations.

Safety Precautions

Read each component's material safety data sheet before use. Mixed material has hazards of each component. Safety precautions must be strictly followed during storage, handling and use.

CAUTION – Improper use and handling of this product can be hazardous to health.

Do not use this product without first taking all appropriate safety measures to prevent property damage and injuries. These measures may include, without limitation: implementation of proper ventilation, use of proper lamps, wearing of proper protective clothing and masks, tenting and proper separation of application areas. Consult your supervisor. Proper ventilation and protective measures must be provided during application and drying to keep spray mists and vapor concentrations within safe limits and to protect against toxic hazards. Necessary safety equipment must be used and ventilation requirements carefully observed, especially in confined or enclosed spaces, such as tank interiors and buildings.

This product is to be used by those knowledgeable about proper application methods. PPG makes no recommendation about the types of safety measures that may need to be adopted because these depend on application environment and space, of which PPG is unaware and over which it has no control.

If you do not fully understand these warnings and instructions or if you cannot strictly comply with them, do not use the product.

Note: Consult Code of Federal Regulations Title 29, Labor, parts 1910 and 1915 concerning occupational safety and health standards and regulations, as well as any other applicable federal, state and local regulations on safe practices in coating operations.

This product is for professional use only. Not for residential use.

PPG Protective & Marine Coatings
www.ppgpmc.com

One PPG Place, Pittsburgh, PA 15272 • Tel: (800) 441-9695

©2008 PPG Industries • Printed in U.S.A. • R 7/08 supersedes R 5/08

AMERCOAT®

Amerlock® 400

Amerlock Series — *High-solids epoxy coating*

Product Data/ Application Instructions

- Low VOC
- High-performance general maintenance coating for new or old steel
- Cures through wide temperature range
- Self-priming topcoat over most existing coatings
- Can be overcoated with wide range of topcoats
- Compatible with prepared damp surfaces
- Compatible with adherent rust remaining on prepared surfaces
- 5 mils or more in a single coat
- Resists high humidity and moisture
- Temperature resistance to 450°F on insulated or uninsulated surfaces when mixed with Amercoat 880 glass flake additive
- Can be applied to substrates with temperatures up to 250˚F

Amerlock's low solvent level meets VOC requirements, reduces the chances for film pinholing and solvent entrapment at the substrate-coating interface, often a major cause of coating failure with conventional epoxies and lower solids systems.

Amerlock 400 is available in a variety of colors, including aluminum, and therefore does not require a topcoat. For extended weatherability or special uses, a topcoat may be desired.

Typical Uses

Amerlock 400 is used in those areas where blasting is impractical or impossible. As a maintenance coating, Amerlock 400 protects steel structures in industrial facilities, bridges, tank exteriors, marine weathering, offshore, oil tanks, piping, roofs, water towers and other exposures. Amerlock 400 has good chemical resistance to splash/spillage, fumes and immersion in neutral, fresh and salt water (see resistance table). Contact your PPG representative for specific information.

Typical Properties

Physical

Abrasion resistance (ASTM D4060)	
1 kg load/1000 cycles	weight loss
CS-17 wheel	102 mg
Impact resistance (ASTM D2794)	
Direct	24 in • lb
Reverse	6 in • lb
Moisture vapor transmission (ASTM D1653)	6.28g/m²/24hrs.
Adhesion (ASTM D4541)	900 psi

Performance

Salt spray (ASTM B117) 3000 hours	
Face blistering	None
Humidity (ASTM D2247) 750 hours	
Face corrosion, blistering	None
Immersion (NACE TM-01-69) fresh water 1 year	
blistering	None

Qualifications

USDA – Incidental food contact
NFPA – Class A
NSF Standard 61* – For use in drinking water, valves only.

** For NSF application information, please visit our website at www.ppgamercoatus.ppgpmc.com/NSF/*

Physical Data

Finish	Semigloss
Color	Standard, Rapid Response, custom colors and aluminum

White and light colors may show yellowing on aging. Use of Amercoat 861 with white or light colors will slightly discolor.
Yellow, red and orange colors will fade faster than other colors due to the replacement of lead-based pigments with lead-free pigments in these colors

Components	2
Curing mechanism	Solvent release and chemical reaction between components
Volume solids (ASTM D2697 modified)	
400	83% ± 3%
400AL	88% ± 3%
Dry film thickness (per coat)	4-8 mils (100-200 microns)
Coats	1 or 2

Theoretical coverage	ft²/gal	m²/L
1 mil (25 microns)		
400	1331	32.6
400AL	1412	34.7
5 mils (125 microns)		
400	266	6.5
400AL	282	6.9

VOC	lb/gal	g/L
400 mixed*	1.5	180
mixed/thinned (½ pt/gal)**	1.8	220
400AL mixed**	1.0	120
mixed/thinned (1½ pt/gal)**	2.0	240

** EPA method 24*
*** Calculated*

Temperature resistance,*	wet		dry	
400	°F	°C	°F	°C
continuous	100	38	200	93
intermittent	100	38	350	177
with 880 (1 gal can/2 gal mix)				
continuous	100	38	425	218
intermittent	100	38	450	232

** At temperatures above 200˚F, dry film thickness must not exceed 10 mils (250 microns).*

Some discoloration and darkening will occur at temperatures greater than 200˚F, this will not affect film integrity or coating performance.

Flash point (SETA)	°F	°C
2/400 resin	131	55
400 cure	85	29
2AL/400AL resin	110	43
400AL cure	116	47
Amercoat® 8	20	-7
Amercoat 65	78	25
Amercoat 101	145	63
Amercoat 12	2	-17

** Amerlock 400 resin and Amerlock 2 resin are identical, and are packaged under a common label as Amerlock 2/400 resin. Amerlock 400 cure and Amerlock 2 cure are different, and are labeled individually.*

Chemical Resistance Guide

Environment	Immersion		Splash and Spillage		Fumes and Weather	
	400	400AL	400	400AL	400	400AL
Acidic	*	*	F	F	G	G
Alkaline	*	*	E	G	E	E
Solvents	*	*	G	G	E	E
Salt water	E	E	E	E	E	E
Water	E	E	E	E	E	E

F-Fair G-Good E-Excellent

**Contact your PPG representative.*

This table is only a guide to show typical resistances of Amerlock 400 and 400AL. For specific recommendations, contact your PPG representative for your particular corrosion protection needs.

Systems using Amerlock 400 or 400AL

1st coat	2nd Coat***	3rd coat***
400	None	None
400	450H Series	None
Amershield™	None	
400**	400	None
Dimetcote® 9 Series	400	None
Dimetcote 9 Series	400	450H Series

***Water immersion.*

****For color contrast when 2 coats of 400AL are used, 400AL red can be used as first coat.*

Recoat/Topcoat time °F/°C

minimum (hours)	90/32	70/21	50/10
400	8	16	30
400 with 1 pt 861	4	7	16
400AL	3	12	48
400AL with ½ pt 861	3	5	12

Recoat/Topcoat time @ 70°F (21°C)

System	Maximum time
400/400	3 months
400 with 861/400	1 month
400/Amershield or 450H Series	1 month
400/5405	1 day
400 with 861/Amershield or 450H Series	2 weeks

Drying times are dependent on air and surface temperatures as well as film thickness, ventilation and relative humidity. Maximum recoating time is highly dependent upon actual surface temperatures - not simply ambient air temperatures. Surface temperatures should be monitored, especially with sun-exposed or otherwise heated surfaces. Higher surface tempertures shorten the maximum recoat window.

Note: If maximum time is exceeded, roughen surface. For topcoats (finish coats) not listed, see Product Data sheet for specific topcoat time limitations.

Surface Preparation

Coating performance is, in general, proportional to the degree of surface preparation. Abrasive blasting is usually the most effective and economical method. When this is impossible or impractical, Amerlock 400 can be applied over mechanically cleaned surfaces. All surfaces must be clean, dry and free of all contaminants, including salt deposits.

Amerlock 400 may be used over most types of properly prepared and tightly adhering coatings. A test patch is recommended for use over existing coatings.

Steel – Remove all loose rust, dirt, moisture, grease or other contaminants from surface. Power-tool clean SSPC-SP3 or hand-tool clean SSPC-SP2. For more severe environments, dry abrasive blast SSPC-SP7. Water blasting is also acceptable. For immersion service – dry abrasive blast SSPC-SP10. For high-heat service on uninsulated substrates, abrasive blast per SSPC-SP6. For insulated substrates, abrasive blast per SSPC-SP10. In both cases, a 2-3 mil profile must be obtained.

Aluminum – Remove oil, grease or soap film with neutral detergent or emulsion cleaner, treat with Alodine® 1200, Alumiprep® or equivalent or blast lightly with fine abrasive.

Galvanizing – Remove oil or soap film with detergent or emulsion cleaner, then use zinc treatment such as Galvaprep® or equivalent or blast lightly with fine abrasive.

Concrete – Acid etching (ASTM D4260) or abrasive blast (ASTM D4259) new concrete cured a minimum of 14 days.

Application Data

Applied over	Steel, concrete, aluminum, galvanizing
Surface preparation	
Steel	SSPC-SP2, 3, 6, 7, 10, 11, or 12
Concrete	ASTM D4259 or 4260
Aluminum	Alodine®, Alumiprep® or light abrasive blast
Galvanizing	Galvaprep® or light abrasive blast
Method	Airless or conventional spray. Brush or roller may require additional coats.
Mixing ratio (by volume)	1 part resin to 1 part cure

Pot life (hours) °F/°C

861 Accelerator Amount	Amerlock /mixed 5 gal	90/32	70/21	50/10	32/0
None	400	1½	2½	4	7
	400AL	3½	5½	10	15
½ pt	400	1	1½	2½	4
	400AL	1	1½	2½	4
1 pt	400	½	1	1½	2

Pot life is the period of time after mixing that a five-gallon unit of material is sprayable when thinned as recommended. Mixture may appear fluid beyond this time, but spraying and film build characteristics may be impaired.

Environmental conditions

Product	Air or Surface Temperature
Amerlock 400	40˚ to 250˚F (4˚ to 121˚C)
Amerlock 400 AL	40˚ to 122˚F (4˚ to 50˚C)
Amerlock with 861	20˚ to 122˚F (-6˚ to 50˚C)
Amerlock 400 with 101*	123˚ to 250˚F (51˚ to 121˚C)

Surface temperatures must be at least 5°F (3°C) above dew point to prevent condensation. At freezing temperatures, surface must be free of ice.

Do not use Amerlock 400AL on water damp surfaces.

** Amerlock 400 may be applied to surfaces as hot as 250˚(121˚C). When applying Amerlock 400 to surfaces between 122˚F and 250˚F, thin ½ pint per gallon with Amercoat 101 thinner. Multiple passes may be required to achieve film build and to avoid solvent blistering.*

Drying time (ASTM D1640) (hours)

861 Amt	Amerlock /mixed 5 gal	120/49	90/32	70/21	50/10	32/0	20/-6
		touch °F/°C					
None	400	1½	4½	9	28	96	NR
	400AL	1	4	12	36	96	NR
½ pt	400	1½	3	5	24	72	120
	400AL	1	1½	2½	5	10	24
1 pt	400	1	2	4	15	48	96

Drying time continued

		through					
None	400	6	12	20	40	140	NR
	400AL	1½	7½	24	72	216	NR
½ pt	400	3	6	10	30	96	180
	400AL	2	4	9	24	48	120
1 pt	400	2½	5	9	24	72	160
		Cure for immersion (days)					
None	400	2	4	7	21	NR	NR
	400AL	2	4	7	21	NR	NR
½ pt	400AL	1	2	3	7	21	NR
1 pt	400	1	2	3	7	21	NR

Amercoat 861 Accelerator will slightly discolor Amerlock 400 white and other Amerlock light colors.

NR = Not recommended

Thinner	Amercoat 8, 65, or 101
Equipment cleaner	Thinner or Amercoat 12

Application Equipment

The following is a guide; suitable equipment from other manufacturers may be used. Changes in pressure, hose and tip size may be needed for proper spray characteristics.

Airless spray – Standard equipment with 30:1 pump ratio or larger, with a 0.017- to 0.021-inch fluid tip.

Conventional spray – Industrial equipment, such as DeVilbiss MBC or JGA or Binks 18 or 62 spray gun. A moisture and oil trap in the main air supply line, a pressure material pot with mechanical agitator and separate regulators of air and fluid pressure are recommended.

Power mixer – Jiffy Mixer powered by an air or explosion-proof electric motor.

Brush or roller – Additional coats may be required to attain proper thickness.

Application Procedure

1. Flush all equipment with thinner or Amercoat® 12 before use.
2. Stir resin and cure using an explosion-proof power mixer to disperse pigments.
3. Add cure to resin. Mix thoroughly until uniformly blended to a workable consistency. For low temperature application, use Amercoat 861 accelerator. Do not exceed the 1 pint Amercoat 861 accelerator per 5 gallon unit recommendation.
4. Do not mix more material than can be used within the expected pot life.
5. For optimum application, material should be from 50° to 90°F (10° to 32°C). Above 122°F (50°C), sagging may occur.
6. Use only PPG recommended thinners. For potable water applications, see current NSF listing at www.nsf.org for approved thinners and thinning restrictions. For other applications, above 85°F (29°C) use Amercoat 8, or 101 at lower temperatures use Amercoat 65. A small amount of thinner greatly reduces viscosity; excessive thinning will cause running or sagging. Thin cautiously as follows:

Amercoat 8 or 65 thinner	400	400AL
Airless – up to	¼ pt/gal	1½ pt/gal
Conventional – up to	½ pt/gal	1½ pt/gal

Below 50°F additional thinning may be needed and multiple coats required to achieve specified thickness.

Above 122˚F, up to 250˚F surface temperatures, use Amercoat 101 thinner sparingly to promote flow and leveling. Excessive thinning will cause running or sagging.

7. To minimize orange peel appearance, adjust conventional spray equipment to obtain adequate atomization at lowest air pressure.
8. Apply a wet coat in even, parallel passes with 50 percent overlap to avoid holidays, bare areas and pinholes. If required, cross spray at right angles.
9. When applying Amerlock 400 directly over inorganic zincs or zinc rich primers, a mist coat/full coat technique may be required to minimize bubbling. This will depend on the age of the Dimetcote®, surface roughness and conditions during curing.

Note – Do not use Amerlock 400AL on water damp surfaces

10. Ventilate confined areas with clean air between coats and while curing the final coat. Prevent moisture condensation on the surface between coats.
11. Repair damaged areas by brush or spray.
12. Clean equipment with thinner or Amercoat 12 immediately after use.

Shipping Data

Packaging unit	2 gal	5 gal
cure	1-gal can	2.5-gal can
resin	1-gal can	2.5-gal can
Shipping weight (approx)	lbs	kg
2-gal unit		
400 cure	12.5	5.7
2/400 resin	13.7	6.2
400AL cure	12.1	5.5
400AL resin	11.0	5.0
5-gal unit		
400 cure	31.8	14.4
2/400 resin	35.0	15.9
400AL cure	30.9	14.0
400AL resin	28.3	12.8

Shelf life when stored indoors at 40° to 100°F (4° to 38°C)
resin and cure 3 years from date of manufacture.

Numerical values are subject to normal manufacturing tolerances, color and testing variances. Allow for application losses and surface irregularities.

This mixed product is photochemically reactive as defined by the South Coast Air Quality Management District's Rule 102 or equivalent regulations.

Safety Precautions

Read each component's material safety data sheet before use. Mixed material has hazards of each component. Safety precautions must be strictly followed during storage, handling and use.

CAUTION – Improper use and handling of this product can be hazardous to health and cause fire or explosion.

Do not use this product without first taking all appropriate safety measures to prevent property damage and injuries. These measures may include, without limitation: implementation of proper ventilation, use of proper lamps, wearing of proper protective clothing and masks, tenting and proper separation of application areas. Consult your supervisor. Proper ventilation and protective measures must be provided during application and drying to keep solvent vapor concentrations within safe limits and to protect against toxic hazards. Necessary safety equipment must be used and ventilation requirements carefully observed, especially in confined or enclosed spaces, such as tank interiors and buildings.

This product is to be used by those knowledgeable about proper application methods. PPG makes no recommendation about the types of safety measures that may need to be adopted because these depend on application and space, of which PPG is unaware and over which it has no control.

If you do not fully understand the warnings and instructions or if you cannot strictly comply with them, do not use the product.

Note: Consult Code of Federal Regulations Title 29, Labor, parts 1910 and1915 concerning occupational safety and health standards and regulations, as well as any other applicable federal, state and local regulations on safe practices in coating operations.

This product is for industrial use only. Not for residential use.

PPG Protective & Marine Coatings
www.ppgpmc.com/northamerica
One PPG Place, Pittsburgh, PA 15272 • Tel: 888-9PPGPMC

©2011 PPG Industries • Printed in U.S.A. • R 03/11 supersedes R11/10

Surface temperatures must be at least 5°F (3°C) above dew point to prevent condensation during application and initial dry through. Relative humidity lower than 40% will extend dry times.

Heat curing

Allow 700 to dry to touch before exposing to curing temperatures above 140°F.

APPLICATION PROCEDURE

Adhere to all application instructions, precautions, conditions, and limitations to obtain the maximum performance. For conditions outside the requirements or limitations described, contact your PPG representative.

1. Flush equipment with thinner or Amercoat® 12 before use.
2. Mix to a uniform consistency.
3. Add PSX® 700 cure to 700 resin. Mix thoroughly until uniformly blended.

Pot life (hours)*	°F/°C		
	90/32	70/21	50/10
700 & 700FD	1.5	4	6.5

4. If needed for workability, thin** with Amercoat 65 or 101 up to 1 pint per gallon PSX® 700.
5. Apply a wet coat in even, parallel passes, overlap each pass 50 percent to avoid holidays, bare areas and pinholes. If required, follow with a cross spray at right angles to first pass.

Drying time (ASTM D1640) (hours) @ 40% R.H. or above

	°F/°C			
	90/32	70/21	50/10	32/0
touch (700)	1.5	3	6	12
touch (700FD)	1	2	4.5	9
through (700)	4	6	11	38
through (700FD)	3	4.5	8.5	24

Recoat/topcoat time (hours) @ 40% R.H. or above

	°F/°C			
	90/32	70/21	50/10	32/0
minimum (700 over 700)	3	4.5	9	32
minimum (700FD over 700FD)	2	3	7	18

6. Brush and/or roll applications will require 2 coats to achieve a 7 mil DFT. There will be some surface texture, which is typical for brush and roll applications.
7. When applying PSX® 700 directly over Dimetcote® or Amercoat 68HS see special thinning instructions.
8. Clean all equipment with thinner or Amercoat 12 cleaner immediately after use.

** Thinning material with 1/2 pt/gal after 3 hours will extend pot life to 5 hours at 70°F.*
*** See special thinning for application over Dimetcote and Amercoat 68HS primers.*
**** See surface preparation for aged coatings.*

THINNING FOR APPLICATION OVER DIMETCOTE

Thin PSX® 700 with Amercoat 65 or 101 up to 1 pint per gallon to assist in film thickness control and to minimize bubbling. This will depend on the age of the coating, surface roughness and conditions during curing. Based on conditions an interval between the mist-coat and full-coat may assist in the application.

SAFETY PRECAUTIONS

Read each component's material safety data sheet before use. Mixed material has hazards of each component. Safety precautions must be strictly followed during storage, handling and use.

CAUTION – Improper use and handling of this product can be hazardous to health and cause fire or explosion.

Do not use this product without first taking all appropriate safety measures to prevent property damage and injuries. These measures may include, without limitation: implementation of proper ventilation, use of proper lamps, wearing of proper protective clothing and masks, tenting and proper separation of application areas. Consult your supervisor. Proper ventilation and protective measures must be provided during application and drying to keep spray mists and vapor concentrations within safe limits and to protect against toxic hazards. Necessary safety equipment must be used and ventilation requirements carefully observed, especially in confined or enclosed spaces, such as tank interiors and buildings.

This product is to be used by those knowledgeable about proper application methods. PPG makes no recommendation about the types of safety measures that may need to be adopted because these depend on application environment and space, of which PPG is unaware and over which it has no control. If you do not fully understand these warnings and instructions or if you cannot strictly comply with them, do not use the product.

Note: Consult Code of Federal Regulations Title 29, Labor, parts 1910 and 1915 concerning occupational safety and health standards and regulations, as well as any other applicable federal, state and local regulations on safe practices in coating operations.

This product is for industrial use only. Not for residential use.

SHIPPING DATA

Packaging unit	1-gal	5-gal
cure	0.20 gal in 1-qt can	1 gal in 1-gal can
FD cure	0.20 gal in 1-qt can	1 gal in 1-gal can
resin	0.80 gal in 1-gal can	4 gal in 5-gal can
Shipping weight (approx)	lb	kg
1-gal unit		
cure	2.0	00.9
FD cure	1.8	00.8
resin	10.3	4.7
5-gal unit		
cure	9.0	4.1
FD cure	8.9	4.0
resin	50	22.7

Shelf life when stored indoors at 40 to 100°F (4 to 38°C)
resin and cure 1 year from shipment date

Numerical values are subject to normal manufacturing tolerances, colors and testing variances. Allow for application losses and surface irregularities.
This product is photochemically reactive as defined by the South Coast Air Quality Management District's Rule 102 or equivalent regulations.

PPG Protective & Marine Coatings

www.ppgpmc.com | 1-800-441-9695

PSX® 700

Engineered Siloxane Coating

PSX® ADVANTAGE

PSX® 700 is the world's first weatherable epoxy that embodies the properties of both a high performance epoxy and an acrylic polyurethane in one coat. This multi-purpose coating offers "breakthrough" weather resistance and corrosion control.

PRODUCT DATA/APPLICATION INSTRUCTIONS

- Unique, high-gloss, self-priming coating
- Can be applied directly over inorganic zinc
- Gloss and appearance retention exceeding the best polyurethane
- Significantly lower applied costs
- Excellent resistance to acid and corrosion
- High solids, low VOC
- Resists high humidity and moisture
- Applied by brush, roller or spray—without thinning
- Outstanding resistance to chemical splash and spill

TYPICAL USES

PSX® 700 adheres strongly to bare steel, coated steel and inorganic zinc silicate coated surfaces on new construction, repair and field maintenance coating projects. It provides effective long-term corrosion control and weatherability.

- Structural steel
  - Bridges
  - Marine
- Tanks
- Piping
- Concrete walls and floors
- Industrial power plants
  - Power
  - Wastewater treatment
  - Pulp and paper
  - Chemical and petrochemical
- Transportation
  - Rail car exterior
  - Vehicle equipment–buses, trucks
- Marine
  - Decks
  - Topside and superstructures on ships
  - Boottops
  - Barges and offshore platforms

Enabling Energy
Fiber Glass and Coatings for Wind Power

PPGWind.com

PHYSICAL DATA

Finish	Gloss	
Color	See Color Card	
Yellow, red and orange colors will fade faster than other colors due to the replacement of lead-based pigments with lead-free pigments in these colors.		
Components	2	
Curing mechanism	Chemical reaction	
Volume solids (calculated)		
PSX 700	90% ± 3%	
PSX 700FD	90% ± 3%	
Coats*	1 or 2	
Theoretical coverage	ft^2/gal	m^2/L
1 mil (25 microns)	1444	35.5
3 mils (75 microns)	481	11.8
5 mils (125 microns)	289	7.1
7 mils (175 microns)	206	5.1
VOC**	lb/gal	g/L
700 & 700FD (EPA method 24)	0.7	84.0
700 & 700FD mixed/thinned @ 2 1/2 oz/gal (calculated)	0.83	99.9
Temperature resistance, dry	°F	°C
continuous	200	193
intermittent	250	121
Flash Point (SETA)	°F	°C
resin	207	97
cure	205	96
FD cure	180	82
Amercoat 12	2	-17
Amercoat 65	81	27
Amercoat 101	145	63
Amercoat 939	60	16

QUALIFICATIONS

NFPA – Class A
USDA – Incidental food contact

** When applying more than one coat, it is recommended that total dry film thickness not exceed 10 mils.*

***The mixed and applied coating cure reaction will produce VOC of mixed alcohols. For 100 g/l VOC requirements, a VOC – exempt thinner such as Amercoat 939 may be used as needed.*

TYPICAL PROPERTIES

PHYSICAL		
Abrasion resistance (ASTM D4060)		
1 kg load/1000 cycles	weight loss	
CS-17 wheel	53mg	
Adhesion, elcometer (ASTM D4541)	2700 psi	
Elongation (ASTM D522)	14%	
PERFORMANCE		
Salt spray (ASTM B117)	5500 hours	
Face corrosion, blistering	None	
Humidity (ASTM D2247)	5500 hours	
Face corrosion, blistering	None	
Gloss retention (ASTM G53) QUV-B bulb		
Greater than 50% gloss retention at 26 weeks		
CHEMICAL RESISTANCE GUIDE		
Environment	Splash and Spillage	Fumes and Weather
Acidic	E	E
Alkaline	E	E
Salt solutions		
acidic	E	E
neutral	E	E
alkaline	E	E
Fresh water	E	E
Solvents	E	E
Petroleum products	E	E
F-Fair G-Good E-Excellent		
This table is only a guide to show typical resistances of PSX® 700. For specific recommendations, contact your PPG representative for your particular corrosion protection needs.		

SYSTEMS USING PSX 700 OR 700FD

Substrate	Coats	DFT per Coat
Steel (blasted)	1 or 2	5-7
Intact coating	1	3
Dimetcote†	1	4-6
Amercoat 68HS†, 370 or 385	1	3-5
Amerlock Series	1	3-5
Concrete††	2	5-7
Amercoat 385,	1	3-5
Amerlock Series	1	3-5
Masonry		
Amerlock 400BF	1	3-5
Nu-Klad 965	1	3-5

† Mist-coat/full-coat application may be required. See special thinning instructions.

†† Fill voids with Nu-Klad 114A prior to applying Amercoat 385, Amerlock Series.

APPLICATION DATA

Applied over**	Prepared or primed steel, primed concrete, prepared galvanizing or aluminum		
Surface preparation			
steel	SSPC-SP5, 6 or 10		
concrete	ASTM D4259 or 4260		
galvanizing	Galvaprep or blast lightly		
aluminum	Alumiprep or blast lightly		
aged coatings	Contact your PPG representative		
Primers	Dimetcote® 9 Series, Dimetcote® 21-5, Amerlock® Series, Amercoat 68HS, 351, 370, 385		
Method	Airless or conventional spray, brush or roller		
Mixing ratio (by volume)	4 parts resin to 1 part cure		
Pot life (hours)‡	°F/°C		
	90/32	70/21	50/10
700 & 700FD	1.5	4	6.5
‡ Thinning material with 1/2 pt/gal after 3 hours will extend pot life to 5 hours at 70°F.			

ENVIRONMENTAL CONDITIONS

Temperature	°F	°C
air	40 to 120	4 to 49
surface	40 to 120	4 to 49
Relative humidity	40% minimum	
Surface temperatures must be at least 5°F (3°C) above dew point to prevent condensation during application and initial dry through.		
Relative humidity lower than 40% will extend dry times.		

Heat curing

Allow 700 or 700FD to dry to touch before exposing to curing temperatures above 140°F.

Drying time (ASTM D1640) (hours) @ 40% R.H. or above

	°F/°C			
	90/32	70/21	50/10	32/0
touch (700)	1.5	3	6	12
touch (700FD)	1	2	4.5	9
through (700)	4	6	11	38
through (700FD)	3	4.5	8.5	24

Recoat/topcoat time (hours) @ 40% R.H. or above

	°F/°C			
	90/32	70/21	50/10	32/0
minimum (700 over 700)	3	4.5	9	32
minimum (700FD over 700FD)	2	3	7	18
maximum‡‡	None			

Thinner	Amercoat 65, 101
Equipment cleaner	Thinner or Amercoat 12

‡‡See surface preparation for aged coatings.

***Appearance will vary depending on substrate and application method. Use two coats of PSX® 700 over bare concrete.*

SURFACE PREPARATION

Coating performance is, in general, proportional to the degree of surface preparation. Refer to specifications for the specific primer being used. Prior to coating, primed surface must be clean, dry, undamaged and free of all contaminants including salt deposits. Round off all rough welds and remove all weld spatter.

Steel – Remove all loose rust, dirt, grease or other contaminants by one of the following depending on the degree of cleanliness required: SSPC-SP6 or 10. The choice of surface preparation will depend on the primer selected and end-use service conditions. In very low to low corrosivity environments, PSX 700 may be applied directly to steel that has been abrasive-blasted to a near-white metal condition (SSPC-SP10).

Concrete – Acid etching (ASTM D4260) or abrasive blast (ASTM D4259) new concrete before priming.

Aluminum – Remove oil, grease or soap film with neutral detergent or emulsion cleaner, blast lightly with fine abrasive.

Galvanizing – Remove oil or soap film with detergent or emulsion cleaner, then blast lightly with fine abrasive.

Aged coatings – Contact your PPG representative. A test patch of PSX® 700 over intact clean coating and observation for film defects over a period of time may be required, dependant upon the type of aged coating.

PSX® 700 is compatible over Amercoat 450H and Amershield.

Repair – Prepare damaged areas to original surface preparation specifications, feathering edges of intact coating. Thoroughly remove dust or abrasive residue before touch up.

APPLICATION EQUIPMENT

The following is a guide; suitable equipment from other manufacturers may be used. Changes in pressure, hose and tip size may be needed for proper spray characteristics.

Airless spray – Standard equipment with a 30 to 1 pump ratio or larger with a 0.015- to 0.021-in. (0.38 to 0.53 mm) fluid tip.

Conventional spray – Industrial equipment such as DeVilbiss MBC or JGA spray gun with 78 or 765 air cap and "E" fluid tip, or Binks No. 18 or 62 gun with a 66 x 63 PB nozzle set up. Separate air and fluid pressure regulators, and a moisture and oil trap in the main air supply line are recommended.

Power mixer – Jiffy Mixer powered by an air or an explosion proof electric motor.

Brush – Natural bristle. Maintain wet edge.

Roller – Use industrial roller. Level any air bubbles with bristle brush.

ENVIRONMENTAL CONDITIONS

Temperature	°F	°C
air	40 to 120	4 to 49
surface	40 to 120	4 to 49
Relative humidity	40% minimum	

Attachment C

Transuranic Waste Container Vents

Direct Sample Filter

Direct Sample NucFil®-019 DS Drum Vent Filter

Direct Sample Drum Vent Filter

- Nuclear Filter Technology's new NucFil®-019 DS direct sample drum vent filter is engineered to provide the same effective hydrogen diffusivity as our NucFil®-019 design, plus it has a sample port to allow drum headspace gas sampling without removing the filter.
- The sample port is self-sealing using a septa material for side-port needle insertion and can be double sealed with a nylon tipped sealing set screw.
- Due to the angle of the sample port, the carbon filter is untouched.
- Filters are certified carbon-carbon HEPA drum vent filters that meet WIPP WAC and TRUPACT-II SAR Appendix 1.3.5 requirements.
- DOT Type 7A Certified.

Drum Vent Filters

NucFil® Drum Vent Filters

- Nuclear Filter Technology's drum vent filters are engineered to provide effective hydrogen diffusivity in a 3/4" design.
- Filters are certified carbon-carbon HEPA drum vent filters that meet WIPP WAC and TRUPACT-II SAR Appendix 1.3.5 requirements:
  - H_2 permeability exceeds 11 E-06 mol/s/mol fraction
  - Greater than 99.97% removal of 0.45 micron DOP
  - Greater than 200 ml/min air flow capacity at < 1.0" W.C.
- NucFil® drum vent filters pass the DOT 7A drop test, stacking test, vibrations test, dart impact and water entry test.
- The carbon-carbon composite filter media:
  - Resists acid and chloride corrosion
  - Is 70% porous
  - Is unaffected by extreme temperatures.

NucFil®-013 Carbon-Bonded/Carbon Filter

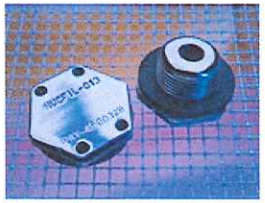

Carbon-carbon offers the best in hydrogen permeability, chemical compatibility and physical durability. The NucFil®-013 has been in use for over 20 years. Filters that have been retrieved from field use and re-tested for filtration performance demonstrate the innate durability and quality of the carbon-carbon filter in a type 304 stainless steel housing.

All filters manufactured are tested for flow rate and percent penetration of 0.45 micron Dioctylpthyalate (DOP) aerosol. We have been manufacturing and testing drum vent filters for ventilation of nuclear and mixed waste drums to NQA-1 standards for over 20 years.

Carbon Composites in Space

The same carbon composite technology used in our NucFil® drum vent filters is used in an Adiabatic Demagnetization Refrigerator on NASA's Astro V Satellite launched on February 7, 2000.

FILTERS

Home
Career Opportunities
Innovations
Filters
Packaging
Analytical Systems Integration
Hydrogen Safety Solutions
Machine Shop
Engineering Services
Quality Assurance
Papers
What's New
Contact Us

Awards Quality Leadership 2009 Click Here

Protecting Our Global Environment Through Innovative Solutions

CLICK HERE Laser Application Division

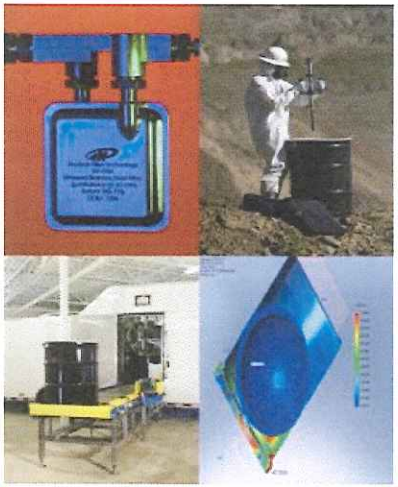

Nuclear Filter Technology (NucFil®) is the first company in the world to provide ventilation for flammable gas mixtures in nuclear waste containers. The company is founded on a unique product that safely vents gases through a robust, chemically inert and radiation resistant carbon composite filter. The activated carbon-bonded-carbon media is the pioneering invention that set the standard and launched an industry in vented nuclear waste packaging.

Over 20 years later, NucFil® is the industry leader dedicated to providing superior packaging, shielding and characterization technologies for ventilation, storage, transportation and disposal of radioactive and mixed waste.

Today, the same innovative thinking that started the company continues, as does our commitment to quality. With a specialized staff of scientists and engineers available to provide engineering, design, fabrication, testing and analytical services, (NucFil®) is able to assist clients with a wide array of needs.

Nuclear Filter Technology
741 Corporate Circle, Suite R
Golden, Colorado 80401

(303) 384-9785 • (303) 384-9579
fax

For information about technical consulting, laboratory and analytical services, and on-site technical support, Please visit:

NFT Incorporated

Drum Vent Filter

Hydrogen Diffusion Advanced NucFil®-019 Drum Vent Filter

- Nuclear Filter Technology's newest drum vent filter is engineered to provide the maximum hydrogen diffusivity in a 3/4" design.

Increased hydrogen diffusion means more loading in each drum

- Filters are certified carbon-carbon HEPA drum vent filters that meet WIPP WAC and TRUPACT-II SAR Appendix 1.3.5 requirements:
  - H_2 permeability exceeds 24 E-06 mol/s/mol fraction- a 5X according to Rev 19 Appendix 2.5
  - Greater than 99.97% removal of 0.45 micron DOP
  - Greater than 200 ml/min air flow capacity at < 1.0" W.C.
- The NucFil®-019 drum vent filter is tested and passes the DOT 7A drop test, stacking test, vibrations test, dart impact and water entry test.
- The carbon-carbon composite filter media:
  - Resists acid and chloride corrosion
  - Is 70% porous
  - Is unaffected by extreme temperatures.

Nuclear Filter Technology

741 Corporate Circle, Suite R Golden, Colorado 80401

Product Specification Data Sheet

Model: NucFil 007 **Date:** 07/07/05
Specification #: NFT-007 **Revision:** 4
Engineering Drawing #: 05260000

Usage:

The NucFil 007 filter is used in conjunction with the NucFil Drum Venting System for drums needing headspace gas analysis in order to comply with shipping regulations and for the control of VOC release and maximum ventilation of Hydrogen gas generated in 30 or 55-gallon drums with or without liners that contain TRU, Low Level, Hazardous or mixed waste

Performance Characteristics:

Particle Removal Efficiency:	≥ 99.97% of 0.45μ mean diameter poly- dispersed di-ocytl phthalate (DOP) aerosol
Resistance to Flow:	≤ 1" W.C. DP @ 200 ml/min
Hydrogen Diffusivity:	≥ 6.1 E^{-06} Mol/Sec/Mol Frac @ 25.0°C
Notes:	

Physical Characteristics:

Filter Media:		Carbon-bonded-carbon
Size:	**Overall Height:**	4.25"
	Diameter:	1.125" head
		3.6" depth into drum.
	Profile:	.66" including .19" O-ring
Material of Construction:		Type 316 Stainless steel
Type of Installation:		9/16 – 11 self tapping tapered threads
Type of Seal:		Neoprene 70 O-Ring, with a silicone sealant secondary seal
Operating Temperature:		-40.0 °C to +70 °C (-40 °F to +158 °F)

In conformance to the following Standards or Specifications:

ASME-NQA-1
DOT 7A 49 CFR – 173.465
Trampac Section 2.5

Identification markings: *(All items will be marked with the following information at a minimum)*

Model Number: **NucFil-007**
Date of Manufacture: (mm/yy)
Unique Serial Number:

Engineering: _____ Quality: _____

Nuclear Filter Technology

741 Corporate Circle, Suite R Golden, Colorado 80401

Product Specification Data Sheet

Model: NucFil-015 DS
Specification #: NFT015DS
Engineering Drawing #: 05150000

Date: Aug. 31, 2004
Revision: 3

Usage:

This specification describes the material, construction, and performance of the NucFil®015 ventilation filter with sample port. The intended use for this filter is the control of VOC release and venting Hydrogen gas generated in containers of, Low Level, Hazardous or mixed waste. The threads are designed to allow installation in a 1" diameter hole in thin gage steel drum lids. The sample port allows direct gas sampling of the container void space while providing maximum hydrogen permeability and qualifying for TRAMPAC, App. 2.5 Rev.19, and 2X HDCF.

Physical Characteristics:

Filter Media:		Carbon-bonded-Carbon
Size:	**Overall Height:**	1.08"
	Diameter:	1.5" Hexagonal head
Material of Construction:		304 SS
Type of Installation:		Special self tapping thread
Type of Seal:		70 Viton O-Ring with silicone RTV secondary seal
Resistance to flow:		Less than 1" W.C. DP @ 200 ml/min
Particle Removal Efficiency:		Greater than 99.97% of 0.3μ to 0.5μ Polydispersed DOP
Hydrogen diffusivity:		≥1.5 E^{-05} Mol/Sec/Mol Frac @ 25.0°C
Operating Temperature:		-40.0° C to +70° C (-40° F to +158° F)
Sample port media:		Silicone septa, with stainless steel hardware
Sample port seal:		Silicone O-ring with stainless steel hardware
Sample port area:		.005 sq. inches

In conformance to the following Standards or Specifications:

ASME-NQA-1, DOT 7A, TRAMPAC, App. 2.5 Rev.19, 2X HDCF

Installation

Drill a 1" (+0.050"/-0.000") diameter hole, such that the top of the filter does not break the plane of the drum lid-retaining ring. Hand start installation, then wrench tighten until o-ring is compressed and the filter goes to zero torque. Apply a bead of silicone RTV sealant between filter housing and the drum lid.

Identification markings:

(All items will be marked with the following information at a minimum)

Model Number: **NucFil 015 DS**
Date of Manufacture: (mm/yy)
Unique Serial Number:

Engineering: _____ Quality: _____

(303) 384-9785 Fax (303) 384-9579 www.nuclearfilter.com

Nuclear Filter Technology

741 Corporate Circle, Suite R Golden, Colorado 80401

Product Specification Data Sheet

Model: NucFil®019
Specification #: NFT-019
Engineering Drawing #: 05190000

Date: 03/18/04
Revision: 2

Usage:

Advanced design for Control VOC release and ventilation of hydrogen gas generated in 55-gallon drums, overpack drums, and Standard Waste Boxes containing TRU, Low Level, Hazardous or Mixed Wastes. Installed into 3/4" flange of newly generated waste drum lids with 10-foot pounds torque. Maximum hydrogen permeability without loss of integrity.

Performance Characteristics:

Particle Removal Efficiency:	Tested at greater than 99.97% of 0.3μ to 0.5μ poly-dispersed (DOP) aerosol.
Resistance to Flow:	Less than 1.0" W.C. DP @200 ml/min
Hydrogen Diffusivity:	2.4 E –05 Mol/sec/mol fraction
Notes:	

Physical Characteristics:

Filter Media:		Carbon-bonded-carbon
Size:	**Overall Height:**	0.72"
	Diameter:	1.50" Hex
	Profile:	0.4"
Material of Construction:		Type 304 Stainless steel
Type of Installation:		Threaded into ¾"-14 NPS
Type of Seal:		Neoprene gasket 0.125" thick 50-70 Durometer

In conformance to the following Standards or Specifications:

ASME-NQA-1

Identification markings:

(All items will be marked with the following information at a minimum)

Model Number: NucFil®019
Date of Manufacture: (MM/YY)
Unique Serial Number:

Engineering: _____ Quality: _____

Attachment D

Seismic Report for TA-63 Transuranic Waste Facility

Los Alamos NATIONAL LABORATORY EST. 1943

memorandum

Earth and Environmental Sciences Division

To/MS: Greg Juerling, TWF Project Manager, MS M870
From/MS: Emily S. Schultz-Fellenz, EES-16, D452
Peter Roberts, EES-17, D443
Richard Kelley, EES-16, D452
Phone/Fax: 7-3605/Fax 7-1628
Symbol: EES16-SHG-2010-001 R1
Date: August 5, 2011

Evaluation of potential seismic hazards from Holocene-age surface-rupturing faults at the site of the proposed transuranic waste facility (TWF), Technical Area 63, Los Alamos National Laboratory: Revision 1

This memorandum summarizes geologic investigations at and around the site of the proposed transuranic waste facility (TWF) at Technical Area 63 (TA-63) of the Los Alamos National Laboratory (LANL) in Los Alamos County, New Mexico.

When selecting a site for a hazardous waste treatment, storage, and/or disposal facility, the owner/operator (in this case, LANS, LLC and NNSA) must adhere to certain location standards, as identified in the Code of Federal Regulations, Title 40 (40 CFR), Part 264.18. The guidelines used to demonstrate compliance with the seismic location standard are presented in 40 CFR, Part 270.14(b)(11).

In this document, we address compliance with the seismic location standard through published geologic data, beginning with a regional view of the Pajarito Plateau and ending with specific focus on the area to be permitted (in this case, a fenced area containing all facilities affiliated with the proposed TWF at TA-63 and proposed to be permitted under the Resource Conservation and Recovery Act [RCRA], herein referred to as the "proposed TWF"). We present a Pajarito Plateau-scale map of faults and aerial photographic lineaments located within a five-mile radius of the area to provide an overview of the structural setting and state of knowledge of the area. We discuss recent published mapping of the Pajarito fault system to determine the presence or absence of Holocene-aged surface-rupturing faults. We also include the following: field reconnaissance and analysis of aerial photography covering a 3,000-ft radius of the area; a thorough discussion of microseismic monitoring, analyses, and identified anomalies in the LANL earthquake catalogue; and a summarization of published geologic studies completed in and around TA-63 for purposes of evaluating Holocene seismic hazards. These studies provide important control on the known extent of possible faults in the area.

Definitions

The following technical terms are used frequently throughout this document. Definitions are taken from The Dictionary of Geological Terms (Bates and Jackson, eds., 1984).

Displacement: a general term for the relative movement of the two sides of a fault, measured in any chosen direction; also, the specific amount of such movement. [Within this report, "displacement" and "offset" are interchangeable terms.]

Holocene: an epoch of the Quaternary period, from the end of the Pleistocene, approximately 8 thousand years ago [*sic*; recent studies have updated the beginning of the Holocene to 11,700 years ago; *cf*. Gradstein et al. (2008); Ogg et al. (2008)] to the present time.

Lineament: a linear topographic feature of regional extent that is believed to reflect crustal structure. Examples are fault lines, aligned volcanoes, and straight stream courses.

An Equal Opportunity Employer / Operated by Los Alamos National Security, LLC for the U.S. Department of Energy's NNSA

Note that the definition of "lineament" used in this report primarily in the context of faulting does not imply that such an identified feature is actually a surficial manifestation of crustal structure with recent tectonic activity until the local geology is carefully considered.

General Geologic Setting

LANL and the Los Alamos townsite sit atop the Pajarito Plateau, which is bounded on its western edge by the Pajarito fault system, a 50-km-long system locally comprised of the down-to-the-east Pajarito fault (the master fault) and subsidiary down-to-the-west Rendija Canyon, Guaje Mountain, and Sawyer Canyon faults (Figure 1). This fault system forms the local active western margin of the Rio Grande rift near Los Alamos.

The proposed TWF area at TA-63 is situated on an unnamed mesa in the north-central part of LANL between Twomile Canyon to the south, Ten Site Canyon to the north, and the headwaters of Cañada del Buey to the east (Figure 2). The local bedrock is the Quaternary Bandelier Tuff, formed in two eruptive pulses from nearby Valles caldera, the eastern edge of which is located approximately 6.5 miles west-northwest of the technical area. The older member (Otowi Member) of the Bandelier Tuff has been dated at 1.61 Ma (Izett and Obradovich 1994). The younger member (Tshirege Member) of the Bandelier Tuff has been dated at 1.256 Ma (age from Phillips et al. 2007) and is widely exposed as the mesa-forming unit around Los Alamos. Several discrete cooling units comprise the Tshirege Member. Commonly accepted stratigraphic nomenclature for the Tshirege Member is described in detail by Broxton and Reneau (1995), Gardner et al. (2001), and Lewis et al. (2009). The cooling unit surficially exposed at TA-63 is Qbt3. Understanding the subtle differences between Tshirege Member cooling units and the nature of the contacts between cooling units is critical to identifying fault-generated displacements around the Pajarito Plateau.

Regional Structural and Seismic Studies

Geologic quadrangle mapping

The New Mexico Bureau of Geology and Mineral Resources, in conjunction with the US Geological Survey's National Cooperative Geologic Mapping Program (STATEMAP), published a geologic and structural map of the Frijoles 7.5-minute quadrangle (Los Alamos area) at 1:24,000 scale (Goff et al. 2002). This study did not identify surficial geologic faults that disrupt the Bandelier Tuff or younger units in the vicinity (e.g., within 3,000 ft) of the proposed facilities at TA-63.

Lineament mapping

Before the completion of detailed geologic mapping at LANL, previous studies had inferred the surface traces of the Rendija Canyon and Guaje Mountain faults to continue southward through TA-55 and TA-63, respectively (including Rogers et al. 1996; Dransfield and Gardner 1985; Vaniman and Wohletz 1990; Wong et al. 1995; Olig et al. 1996; and Wohletz 2004). Studies by Gardner et al. (1998, 1999, 2008), Lewis et al. (2002, 2009), and Lavine et al. (2003, 2005) utilized the most widely-accepted and detailed published stratigraphy of the Bandelier Tuff (that of Broxton and Reneau 1995; published in peer-reviewed literature by Lewis et al. 2009) to map small displacements across Tshirege Member cooling unit contacts throughout much of western and central LANL. Additionally, these more recent studies have acquired information on fault locations and amount of displacement using high-precision geodetic mapping of Tshirege Member cooling unit contacts along canyon exposures. These recent, detailed studies have shown that previously-mapped lineaments in this area are not expressed as young surface-rupturing projections of the Rendija Canyon and Guaje Mountain faults transecting TA-55 and TA-63. In fact, the surface trace of the Rendija Canyon fault bends southwesterly and splays into TA-3 instead of continuing

southerly through TA-55, and the surface expression of the Guaje Mountain fault is not identifiable south of Pueblo Canyon.

While lineament mapping has been completed at a regional scale across much of the Pajarito Plateau, we emphasize that for determining the presence of Holocene faults at a given site, conventional field geologic mapping or paleoseismic trenching must be consulted or performed to confirm that (1) a lineament is truly a fault, and (2) that it displaces young units. Olig et al. (1998) supports this:

> The lineaments [from Wong et al. (1995), Plate 1] were identified on aerial photographs or observed during an aerial reconnaissance and field-checked at a reconnaissance level. However, this generalized map … should be considered preliminary in nature until a more comprehensive and detailed surficial mapping of LANL is completed.

Plate 1 of this report shows the proposed RCRA-permitted TWF fenced area at TA-63, a five-mile buffer around the facility (as mandated by 40 CFR 270.14(b)(11)(A)(2)), mapped surficial faults (Lewis et al. 2009), and mapped lineaments (Vaniman and Wohletz 1990; Wong et al. 1995). The surficial faults shown on Plate 1 and mapped by Lewis et al. (2009) represent the most recent and detailed state of knowledge of the surficial expression of the Pajarito fault system near LANL. The Pajarito fault system was mapped at 1:1,200 scale by personnel with a detailed knowledge of structural geology and Tshirege Member subunits, and the map of Lewis et al. (2009) represents a culmination of many years of work by the LANL Seismic Hazards Geology Team. In many locations around TA-63, high-precision geodetic surveying was used to identify minor (< 3 ft) displacements on the contacts of Tshirege Member subunits along canyon exposures, thus determining the presence or absence of faults in anthropogenically-disturbed areas. No surficial faults with lateral continuity associated with the Pajarito fault system fall within the 3,000 ft buffer surrounding the proposed TWF shown on Plate 1.

Microseismic monitoring and analyses

The Los Alamos Seismic Network (LASN) continuously monitors local earthquake activity in the Los Alamos area in support of LANL's Seismic Hazards program. Seismic monitoring of LANL facilities is a requirement of DOE Order 420.1B (Facility Safety). LASN currently consists of several permanent seismic instrument field stations that telemeter real-time sensitive ground motion data to a central recording facility. Four of these stations are located on LANL property, with three of those positioned within 1 to 4 km of TA-63. Four other stations are in remote locations in the Jemez Mountains, St Peters Dome, and the Caja del Rio plateau across the Rio Grande. The network has been detecting and archiving seismic events from 1973 to present. During that time, over 750 clearly locatable earthquakes were recorded in northern New Mexico. Over 200 of these were located within a 50-km radius of Los Alamos, and roughly 90 of those were within 20 km. Figure 3 shows the current LASN station locations and the seismic events recorded in the area from 1973 to 2007. Because the LASN station spatial coverage is limited, and stations on LANL property are plagued by cultural noise (e.g., construction activities, explosive shots), there can be issues with earthquake identification and location errors. Misidentification of recorded events as local earthquakes is very rare. When it does occur, the most common cause is that LANL test explosions and distant earthquakes occasionally generate signals that can mimic the characteristics of local earthquakes.

Previous versions of the map of LASN-detected local seismic events had plotted two local earthquake epicenters close to TA-63. Subsequent assessment of those specific earthquake signals determined they were erroneously identified as local earthquakes. The two events in question were recorded on September 22, 1992, and on November 11, 2001. The signal characteristics and arrival times at the LASN stations for both of these events led to ambiguous interpretations of the origin of the sources that generated them. LANL seismologists have recently taken a closer look at the signals and identified the 1992 event as a LANL explosion at TA-36, and the 2001 event as a specific type of seismic wave reflected off the Earth's core and generated by a distant earthquake roughly

An Equal Opportunity Employer / Operated by Los Alamos National Security, LLC for the U.S. Department of Energy's NNSA

6,000 km away. No earthquakes detected by LASN have occurred or been located within 3,000 feet of TA-63 during the network's 37 years of operation.

Published geologic studies of relevance to seismic hazards issues at TA-63

Three published geologic investigations sought evidence for the presence or absence of Holocene faulting associated with the Rendija Canyon and Guaje Mountain faults in the TA-63 and surrounding areas. One study in particular examined TA-63 for Holocene faulting hazards in accordance with 40 CFR 264. These investigations provide important constraint on the location, size, distribution, and implications of known faults with relation to TA-63. We summarize these geologic studies below, in chronological order by publication date.

- **Dransfield and Gardner 1985**, Subsurface Geology of the Pajarito Plateau, Española Basin, New Mexico [report number LA-10455-MS]

  This report provides a description of geologic structure in units older than the Bandelier Tuff, based upon drill cores and geophysical surveys across the Pajarito Plateau. The authors note prominent aerial photographic lineaments projecting southward from Pueblo Canyon, and interpret these lineaments as subsurface projections of the Rendija Canyon and Guaje Mountain faults as far south as Water Canyon. The study attributes the lineaments to surficial manifestations of eroded fracture zones propagating upward from the subsurface trace of the faults. Both the Rendija Canyon and Guaje Mountain faults appear in seismic reflection transects south of their mapped surficial traces. A detailed surficial mapping campaign for the antithetic structures of the Pajarito fault system (Rendija Canyon and Guaje Mountain) had not yet been undertaken by the Laboratory at the time of publication of Dransfield and Gardner's work. The work of Dransfield and Gardner, however, provided the impetus for further detailed geologic investigations throughout much of northern and western LANL as the Laboratory complex began to modernize facilities.

- **Reneau et al. 1995**, Surficial Materials and Structure at Pajarito Mesa [from Reneau and Raymond, eds., report number LA-13089-MS]

  A proposed mixed waste disposal facility at Pajarito Mesa prompted geologic surface mapping, high-precision total station mapping, and exploratory trenching around TA-67, south of TA-55 and southwest of TA-63. At the time of this study, it was postulated that young surface faulting associated with the Rendija Canyon fault might trend southward from the Los Alamos townsite, directly through TA-60, TA-48, TA-55, TA-40, and TA-67. Previous studies (including Dransfield and Gardner, 1985) had shown southern projections of the Rendija Canyon and Guaje Mountain faults through Pajarito Mesa. The geological mapping and trenching of Reneau et al. (1995) showed that faulting had affected Pajarito Mesa in the past, but the faulting is more complicated than previously inferred by Dransfield and Gardner (1985). Both down-to-the-east and down-to-the-west faulting is seen at Pajarito Mesa. Small faults were identified through conventional geologic mapping and mesa-edge investigations. Their lateral continuity could not be constrained, so these small faults are identified on maps as point-locations of offset on Tshirege Member cooling units (cf. Plate 2). A full paleoseismic history was not identified in this study, but it was determined that faults did not affect geologic units younger than ~50-60 ka (ka = thousand years ago). No increase in fracture density across the projections of the Rendija Canyon or Guaje Mountain faults was seen, and a detailed geodetic survey showed no displacement of the Bandelier Tuff along the Rendija Canyon fault projection.

- **Kolbe et al. 1995**, Evaluation of the Potential for Surface Faulting at TA-63 [unpublished consulting report prepared for LANL by Woodward-Clyde Federal Services]

In the early 1990s, LANL began planning a hazardous waste treatment facility and radioactive liquid waste treatment facility at TA-63. Since this facility was designed for use in the treatment and storage of hazardous waste (thus requiring compliance with seismic location standards outlined in 40 CFR Part 264), a detailed geologic investigation of the site was undertaken to determine the presence or absence of Holocene faults. This detailed investigation included the examination of a series of paleoseismic trenches across the full west-east extent of TA-63, and southwestern portions of TA-52. Trenches were opened and investigated because Dransfield and Gardner (1985), Vaniman and Wohletz (1990), and Wong et al. (1993) projected faults through the site based on fracture density studies, aerial photography lineaments, and deep seismic analyses. Trenches totaling 685 m in length were excavated (Figure 4). These trenches were oriented perpendicular to the north-south trending geologic faults. The trench locations were dictated by cultural and physical constraints (e.g., archaeological sites, utilities), and were designed with overlap to maximize the opportunity to expose potential fault traces and displacements. At the time of the Kolbe et al. (1995) study, a detailed geologic investigation of surficial deposits at TA-63 had not been undertaken and it was not known whether Holocene surface faulting associated with the Guaje Mountain fault was expressed in this area. The trenches were excavated to expose the Bandelier Tuff and overlying deposits, to evaluate whether evidence of faulting was present, and to constrain the timing of faulting.

Kolbe et al (1995) performed a field reconnaissance of the TA-63 area before any paleoseismic trenching began. The site's geologic conditions were assessed to determine whether fault activity younger than the Bandelier Tuff might be geomorphically expressed at the site. The researchers determined that enough material overlying the tuff was present to make trenching useful in determining the presence or absence of Holocene faulting. Investigators opened four paleoseismic trenches across TA-63 and TA-52 (Figure 4). A fifth trench was also excavated in TA-63 west of the others and across the projected trace of the Guaje Mountain fault as projected by Vaniman and Wohletz (1990) and Wong et al. (1993).

The trenches exposed the Tshirege Member cooling unit Qbt3 and an associated pyroclastic surge deposit, and also exposed discontinuous deposits of six units overlying the tuff. The study attempted through two mechanisms to date the stratified material overlying Bandelier Tuff. The first method, radiocarbon dating, had little success. Only six charcoal samples were recovered from all the trenches at TA-63, with ^{14}C ages ranging from modern to 3050 ± 70 years before present (in radiocarbon years before AD 1950). Sample ages were interpreted by the authors to be inconsistent with the probable age of the units in which the ^{14}C samples were entrained, therefore presenting a challenge for constraining the ages of materials overlying tuff. Considering this, the project used composition of fracture fills, morphology of fractures, assessment of vertical separations at the interface of the tuff and the overlying material, and estimates of soil development rates to evaluate Holocene faulting at the site.

Evaluating fracture age based upon fracture fill also posed problems. Fracture fill varied depending upon the width of the fracture. However, a few fractures were found to contain rounded Tschicoma Formation dacite pebbles, which from other sites around LANL indicated the presence of older alluvial material (e.g., Wong et al., 1993) deposited shortly after the Bandelier Tuff was emplaced. This finding implies that those fractures are old features. In addition, at least three other fractures contained El Cajete pumice, dated at ~50-60 ka, suggesting that by the time of deposition of the El Cajete pumice the fractures were already present.

Fractures in tuff versus overlying material vary markedly in aperture (2 to 80 mm in tuff; 1 to 5 mm in overlying deposits). Only about 10% of through-going fractures found in Qbt3 in the trenches are coincident with fractures in the overlying material. Fractures in overlying material that are coincident with tuff fractures were not found to extend to the ground surface. The morphological difference and lack of coincidence of tuff fractures and those in overlying deposits suggest these fractures are not contemporaneous.

An Equal Opportunity Employer / Operated by Los Alamos National Security, LLC for the U.S. Department of Energy's NNSA

Three, possibly four, episodes of soil formation were documented in the TA-63 and TA-52 trenches. The ages of the soils, identified by thickness, entrained materials (e.g., El Cajete pumice), and degree of soil development, ranged from modern to >50 ka. The most complete stratigraphic column found at the site was in Trench 1 (see Figure 3), in the southeastern corner of TA-63.

No vertical offsets were observed in any stratified material overlying bedrock (tuff) fractures. Evidence for gas-escape structures (fossil fumaroles) were found within Qbt3 in the trenches. These features had random distribution, pipe-like in geometry, and fines-depleted fill material. Similar features have been identified through geologic trenching investigations at TA-55 (Gardner et al. 2008) and TA-67 (Kolbe et al. 1994).

Width, orientation, frequency, and characteristics of fracture fill materials were recorded in all trenches for through-going fractures with dips greater than 45°. These data were further subdivided into faults or joints (by the presence or absence of shearing and/or slickensides). Fracture frequency and width were compiled and plotted. The analyses show no significant increase in fracture density toward or within the projection of the Guaje Mountain fault or toward the cliff edge along the northern and eastern margins of the site. Strikes of steeply-dipping fractures were plotted on lower-hemisphere stereonet projections. Most fractures were vertical with northwest to northeast strikes. The study found no strong correlation between fracture width and fracture density. Average fracture widths increase with proximity to the mesa edge on the eastern side of the site (TA-52), and away from the projection of the Guaje Mountain fault. This is in contrast to Vaniman and Wohletz (1990), which suggested fracture widths should have increased toward/within the area of the projected fault. The study interpreted the widening of fractures as a relationship to settling of tuff blocks toward the canyons, and not to faulting.

To summarize, **no geomorphic or stratigraphic evidence for Holocene faulting was identified at TA-63 through trenching investigations**. At that site, no vertical displacement of the Bandelier Tuff was evident. No scarps from the projected Guaje Mountain fault, as mapped by Vaniman and Wohletz (1990) and Wong et al. (1993) were identified within TA-63, either through site reconnaissance or trenching investigations.

Local Lineament Mapping and Field Reconnaissance at TA-63 and Surrounding Canyons

We present a local lineament map (Plate 2) of the 3,000-ft buffer area surrounding the proposed TWF at TA-63. Present on both Plates 1 and 2 are lineaments from Wong et al. (1995; yellow lines) and Vaniman and Wohletz (1990; orange lines) that trend roughly north-south. The lineaments mapped by Wong et al. (1995) and Vaniman and Wohletz (1990) were identified using aerial photographs. Subsequent published geologic studies that examined the canyon exposures at areas where the lineaments are projected to cross TA-63 (*cf.* Gardner et al., 1998, 1999; Lavine et al. 2003) identified that some lineaments do correspond to small displacements of the Bandelier Tuff. Two small point-locations of displacement were identified on the Qbt2-Qbt3 contact in Twomile and Mortandad Canyons. However, displacement could not be traced down or up through the stratigraphic section, faults were not visible as surficial offset nor could they be traced across mesa-tops through conventional geologic mapping, and were not found to displace geologic units younger than the tuff (younger than 1.256 Ma).

At TA-63, high-precision geodetic surveying was used to identify displacements on the Tshirege Member cooling unit contacts along canyon exposures, thus determining the presence or absence of small-displacement faults. Gardner et al. (1998; 1999) performed high-precision geodetic surveying of Twomile, Ten Site, and Mortandad Canyons to locate small-displacement faults, and while they located numerous small faults further west and south within TA-55, they found no faults within 200 ft of the proposed TWF at TA-63. Similarly, Kolbe et al. (1995) found no evidence of Holocene faulting in numerous trenches across the east-west extent of TA-63.

An Equal Opportunity Employer / Operated by Los Alamos National Security, LLC for the U.S. Department of Energy's NNSA

Figure 5 is a map of the proposed RCRA-permitted TWF area, with 200-ft (red) and 3,000-ft (blue) buffers for RCRA seismic considerations. This map shows no faults within the 200-ft buffer. Two identified points of offset on the Bandelier Tuff Tshirege Member cooling units fall within the 3,000 ft buffer. The point-locations of offset south of the proposed TWF was mapped by Gardner et al. (1999) as 2 ft down-to-the-north displacement, and the point-location of offset north of the proposed TWF was mapped by Lavine et al. (2003) as 2-3 ft down-to-the-west displacement. The points of offset roughly correlate with a lineament mapped by Vaniman and Wohletz (1990). These points of offset were found to have very little to no lateral continuity, could not be traced down or up through the stratigraphic section, were not visible as surficial offset, they could not be followed across mesa-tops through conventional geologic mapping, and were not found to displace geologic units younger than the tuff (younger than 1.256 Ma). Additionally, Kolbe et al. (1995) found no evidence for faulting within the trenches that span TA-63.

This evaluation identifies a few lineaments on Plate 2 (red dotted lines) that broadly correlate to previously mapped lineaments. Only one minor lineament in this current investigation roughly correlates with a horsetail splay of a lineament mapped by Vaniman and Wohletz (1990). Lineaments identified in this mapping do not correlate to known surficial geologic faults , and have not been found to displace the Bandelier Tuff or younger units (where present) in the previous studies summarized above.

Discussion

Site-specific geologic investigations in the TA-63 area, described above, show that the lineaments mapped through TA-63 on Plates 1 and 2 do not correlate with any Holocene faults. Earlier studies that projected lineaments through the site at the ground surface prompted careful geologic site investigations by the extensive trenching campaign of Kolbe et al. (1995), which did not find evidence of Holocene fault activity at TA-63. Neither geologic investigations at the TA-63 area, nor geologic quadrangle mapping in the Los Alamos area, show surficial faults in areas where lineaments were identified on Plate 2 of this report.

One detailed geologic study in the greater TA-63 area identified two point-locations of Tshirege Member offset, one each to the north and south of the technical area in canyon exposures (Gardner et al., 1999). These offsets are small, both in amount of displacement (< 3 ft) and in lateral continuity. The offsets were identified at only one Tshirege Member subunit contact, and could not be similarly found in the same area in subunit contacts higher or lower in the stratigraphic section. In comparison, other locations around Los Alamos where Holocene faulting has occurred and paleoearthquakes have been documented often show tens of feet of displacement along a linear feature that is several miles long. The small point-locations of offset north and south of the TWF are too small to be independently seismogenic and thus the hazard with respect to Holocene surface faulting to the proposed TWF is extremely low.

Since the investigations by Kolbe et al. (1995), anthropogenic disturbance and further facility/infrastructure development at LANL affects much of the area within the 200-ft buffer of the proposed TWF. Many post-Bandelier Tuff sediments have been stripped from the mesa-top within the technical area to construct new facilities. Without undisturbed post-Bandelier Tuff sediments, conducting future geologic field studies with the purpose of identifying potential Holocene movement(s) across geologic structures (including paleoseismic trenching or borehole investigations) would be extremely challenging, if not impossible, in the vicinity of the proposed TWF. Also, further such investigations would be redundant to the careful work of Kolbe et al. (1995).

Conclusions

Trenching investigations across the west-east extent of TA-63 found no geomorphic or stratigraphic evidence for Holocene faulting at the site. Two locations of offset on Tshirege Member cooling units within the 3,000 ft buffer

An Equal Opportunity Employer / Operated by Los Alamos National Security, LLC for the U.S. Department of Energy's NNSA

around the proposed TWF correlate roughly to one lineament mapped by Vaniman and Wohletz (1990). These locations show only small displacements (< 3 ft) on Tshirege Member cooling unit contacts along the mesa edges. The faults cannot be traced across mesas or to other canyon exposures, they do not show movement in Holocene time, and they do not have clear connections to other major regional faults. Therefore, these small faults should not be considered a seismic hazard to the proposed TWF. Based on the data presented in this memo using information from published geologic studies at and around TA-63, aerial reconnaissance of the area within a five-mile radius from the proposed TWF, an analysis of aerial photographs, and field reconnaissance of lineaments and contact elevations, we demonstrate that no faults with Holocene displacement are present within 200 ft of the proposed TWF. Aerial reconnaissance, detailed geologic mapping of portions of LANL, and paleoseismic trenching investigations show that the focus of potential Holocene faulting is concentrated along the main Pajarito fault, over 16,000 ft west of the proposed TWF.

Figure Captions

Figure 1. Map of the Pajarito fault system in the vicinity of Los Alamos National Laboratory (green outline). Location of TA-63 is highlighted as an orange polygon; proposed TWF location represented as red polygon within TA-63. Proposed TWF area is shown in greater detail in Figure 2. **PF** = Pajarito fault; **RCF** = Rendija Canyon fault; **GMF** = Guaje Mountain fault; **SCF** = Sawyer Canyon fault. Fault mapping (bold black lines) from Lewis et al. (2009).

Figure 2. Map view of the location of the proposed TWF within TA-63. The TA-63 technical area is shaded yellow with a green border. The region proposed for RCRA permitting is shown as a pink shaded area with a red ball-bar border. Some proposed support and operational structures are also shown as orange polygons within the proposed RCRA-permitted area. The 200 ft buffer is a bold red line surrounding the proposed TWF. Twomile Canyon lies to the southwest of the technical area; Ten Site Canyon heads along the northeastern corner of TA-63; and the headwaters of Cañada del Buey are along the eastern margin of TA-63.

Figure 3. Map of earthquakes recorded by the Los Alamos Seismic Network (LASN) from 1973 to 2007. Individual earthquake epicenters shown as purple circles; relative circle size indicates earthquake magnitude. TA-63 shown as red square. See report text for further discussion.

Figure 4. Map of trench locations, taken directly from Kolbe et al. (1995). Trenches 5, 4, and 1 span the full west-east extent of TA-63. (At the time of publication of Kolbe et al. (1995), the boundary of TA-63 was slightly different than it is now.) Trenches 1 and 4 span a majority of the footprint of the proposed TWF. Projected trace of the Guaje Mountain fault (as indicated by Vaniman and Wohletz 1990; Wong et al. 1993) shown as bold dashed line.

Figure 5. Map of the proposed TWF (gray polygon at center of map) in relation to the 200 ft (red) and 3,000 ft (blue) buffers. Two locations of offset identified on Tshirege Member cooling unit contacts fall within the 3,000 ft buffer, but none are located within the 200 ft buffer. See text for further discussion.

Plate 1. Color orthophotography, mapped faults, and mapped lineaments within 3,000 feet (blue circle) and five miles (black circle) of the proposed TWF at TA-63. Structural mapping (bold black lines) from Lewis et al. (2009). Mapped lineaments from Vaniman and Wohletz (1990; orange dotted lines), Wong et al. (1995; yellow dotted lines), and this study (red dotted lines). TA-63 is east of the main trace of the Pajarito fault system. See text for further discussion.

Plate 2. Orthophotography, mapped faults, and mapped lineaments in the area surrounding the proposed TWF. Lineaments from Vaniman and Wohletz (1990; orange dotted lines), Wong et al. (1995; yellow dotted lines), and

An Equal Opportunity Employer / Operated by Los Alamos National Security, LLC for the U.S. Department of Energy's NNSA

this study (red dotted lines). Two separate lineaments project into the 3,000 ft buffer (blue circle) around Building 185. These lineaments also project within the 200 ft buffer (red line) surrounding the facility. However, trenching by Kolbe et al. (1995) did not find evidence for young faulting along either of these lineaments. Two locations of offset fall within the 3,000 ft buffer and were mapped by high-precision geodetic studies (Gardner et al. 1999; Lavine et al. 2003). The two offset locations broadly correlate with mapped lineaments; however, displacement could only be identified on the Qbt3-Qbt2 contact, was not found at other locations in the same stratigraphic section, nor was displacement identified at any location along the same mapped lineament north of Mortandad Canyon. See text for further discussion.

References

Bates, RL and JA Jackson, eds., 1984, *Dictionary of Geological Terms*; American Geological Institute, 571 pp.

Broxton, DE and SL Reneau, 1995, Stratigraphic nomenclature of the Bandelier Tuff for the Environmental Restoration Project at Los Alamos National Laboratory; Los Alamos National Laboratory report LA-13010-MS, 21 pp.

Dransfield, BJ, and JN Gardner, 1985, Subsurface geology of the Pajarito Plateau, Española Basin, New Mexico; Los Alamos National Laboratory report LA-10455-MS, 15 pp.

Gardner, JN, A Lavine, D Vaniman, and G WoldeGabriel, 1998, High-precision geologic mapping to evaluate the potential for seismic surface rupture at TA-55, Los Alamos National Laboratory; Los Alamos National Laboratory report LA-13456-MS, 13 pp.

Gardner, JN, A Lavine, G WoldeGabriel, D Krier, D Vaniman, FA Caporuscio, CJ Lewis, SL Reneau, E Kluk, and MJ Snow, 1999, Structural geology of the northwestern portion of Los Alamos National Laboratory, Rio Grande rift, New Mexico: Implications for seismic surface rupture potential from TA-3 to TA-55; Los Alamos National Laboratory report LA-13589-MS, 112 pp.

Gardner, JN, ES Schultz-Fellenz, FA Caporuscio, CJ Lewis, RE Kelley, and MK Greene, 2008, Geology and structure of the Chemistry and Metallurgy Research Facility Replacement Site, Los Alamos National Laboratory, New Mexico; Los Alamos National Laboratory report LA-14378, 295 pp.

Goff, F, JN Gardner, and SL Reneau, 2002, Geologic map and structure of the Frijoles 7.5-minute Quadrangle, Los Alamos and Sandoval Counties, New Mexico; New Mexico Bureau of Geology and Mineral Resources, Geologic Open-File Map OF-GM 42, scale 1:24,000.

Gradstein, FM, JG Ogg, and M van Kranendonk, 2008, On the Geologic Time Scale 2008; *Newsletters on Stratigraphy* **43**, 5-13.

Izett, GA, and JD Obradovich, 1994, $^{40}Ar/^{39}Ar$ age constraints for the Jaramillo normal subchron and the Matuyama-Brunhes geomagnetic boundary; *J Geophys Res* **99** (B2), pp. 2925-2934.

Kolbe, T, J Sawyer, A Gorton, S Olig, D Simpson, C Fenton, S Reneau, J Carney, J Bott, and I Wong, 1994, Evaluation of the potential for surface faulting at the proposed Mixed Waste Disposal Facility, TA-67; unpublished consulting report prepared for Los Alamos National Laboratory by Woodward-Clyde Federal Services, Oakland, California.

Kolbe, T, J Sawyer, J Springer, S Olig, S Reneau, M Hemphill-Haley, and I Wong, 1995, Evaluation of the potential for surface faulting at TA-63; unpublished consulting report prepared for Los Alamos National Laboratory by Woodward-Clyde Federal Services, Oakland, California.

Lavine, A, CJ Lewis, DK Katcher, and J Wilson, 2003, Geology of the north-central to northeastern portion o f Los Alamos National Laboratory, New Mexico; Los Alamos National Laboratory report LA-14043-MS, 44 pp.

Lavine, A, JN Gardner, and ES Schultz, 2005, Evaluation of faulting at the Chemistry and Metallurgy Research Facility Replacement (CMRR) site based on examination of core from geotechnical drilling studies, TA-55, Los Alamos National Laboratory; Los Alamos National Laboratory report LA-14170, 21 pp.

An Equal Opportunity Employer / Operated by Los Alamos National Security, LLC for the U.S. Department of Energy's NNSA

Lewis, CJ, A Lavine, SL Reneau, JN Gardner, R Channell, and CW Criswell, 2002, Geology of the western part of Los Alamos National Laboratory (TA-3 to TA-16), Rio Grande rift, New Mexico; Los Alamos National Laboratory report LA-13960-MS, 98 pp.

Lewis, CJ, JN Gardner, ES Schultz-Fellenz, A Lavine, SL Reneau, and S Olig, 2009, Fault interaction and along-strike variation in throw in the Pajarito fault system, north-central New Mexico; *Geosphere* **5**, pp. 252-269.

Ogg, JG, G Ogg, and FM Grandstein, eds., 2008, *The Concise Geologic Time Scale*; Cambridge University Press, 184 pp.

Olig, SS, KI Kelson, JN Gardner, SL Reneau, and M Hemphill-Haley, 1996, The earthquake potential of the Pajarito fault system, New Mexico; in Goff, F, BS Kues, MA Rogers, LD McFadden, and JN Gardner, eds., *New Mexico Geological Society 47th Annual Fall Field Conference Guidebook; The Jemez Mountains Region*, p. 143-152.

Olig, S, R Youngs, and I Wong, 1998, Probabilistic seismic hazard analysis for surface fault displacement at TA-3, Los Alamos National Laboratory; unpublished consulting report prepared for Los Alamos National Laboratory by Woodward-Clyde Federal Services, Oakland, California.

Phillips, EH, F Goff, PR Kyle, WC McIntosh, NW Dunbar, and JN Gardner, 2007, The $^{40}Ar/^{39}Ar$ age constraints on the duration of resurgence at the Valles caldera, New Mexico; *J Geophys Res* **112** (B09201), DOI: 10.1029/2006JB004511.

Reneau, SL, TR Kolbe, DT Simpson, JS Carney, JN Gardner, S Olig, and DT Vaniman, 1995, Surficial materials and structure at Pajarito Mesa; in *Geological Site Characterization for the proposed Mixed Waste Disposal Facility, Los Alamos National Laboratory*, SL Reneau and R Raymond, eds.; Los Alamos National Laboratory report LA-13089-MS, 31-69.

Rogers, MA, KE Budding, and CVL Christie, 1996, Distinguishing tectonic joints from cooling joints in the Bandelier Tuff (Pleistocene), Pajarito Plateau, Los Alamos county, New Mexico; *New Mexico Geological Society Guidebook* **47**, 293-302.

Vaniman, D and K Wohletz, 1990, Results of geological mapping and fracture studies: TA-55 area; unpublished memo report, Los Alamos National Laboratory, EES1-SH90-17.

Wohletz, K, 2004, Tuff fracture characterization along Mortandad Canyon between OU-1114 and OU-1129; Los Alamos National Laboratory report LA-UR-04-8337, 29 pp.

Wong, I, M Hemphill-Haley, K Kelson, T Kolbe, R Green, H Kanakari, J Bott, W Silva, C Haraden, J Gardner, L House, and S Reneau, 1993, Seismic hazards evaluation of the Los Alamos National Laboratory; unpublished consulting report prepared for Los Alamos National Laboratory by Woodward-Clyde Federal Services, Oakland, California.

Wong, I, K Kelson, S Olig, T Kolbe, M Hemphill-Haley, J Bott, R Green, H Kanakari, J Sawyer, W Silva, C Stark, C Haraden, C Fenton, J Unruh, J Gardner, S Reneau, and L House, 1995, Seismic hazards evaluation of the Los Alamos National Laboratory; unpublished consulting report prepared for Los Alamos National Laboratory by Woodward-Clyde Federal Services, Oakland, California.

Distribution

Gian Bacigalupa, ENV-RCRA, LANL
Mark Haagenstad, ENV-RCRA, LANL
W. Bruce Masse, ENV-ES, LANL
Jim Bossert, EES-DO, LANL
Carl Gable, EES-16, LANL

Attachments (5 figures; 2 plates)

An Equal Opportunity Employer / Operated by Los Alamos National Security, LLC for the U.S. Department of Energy's NNSA

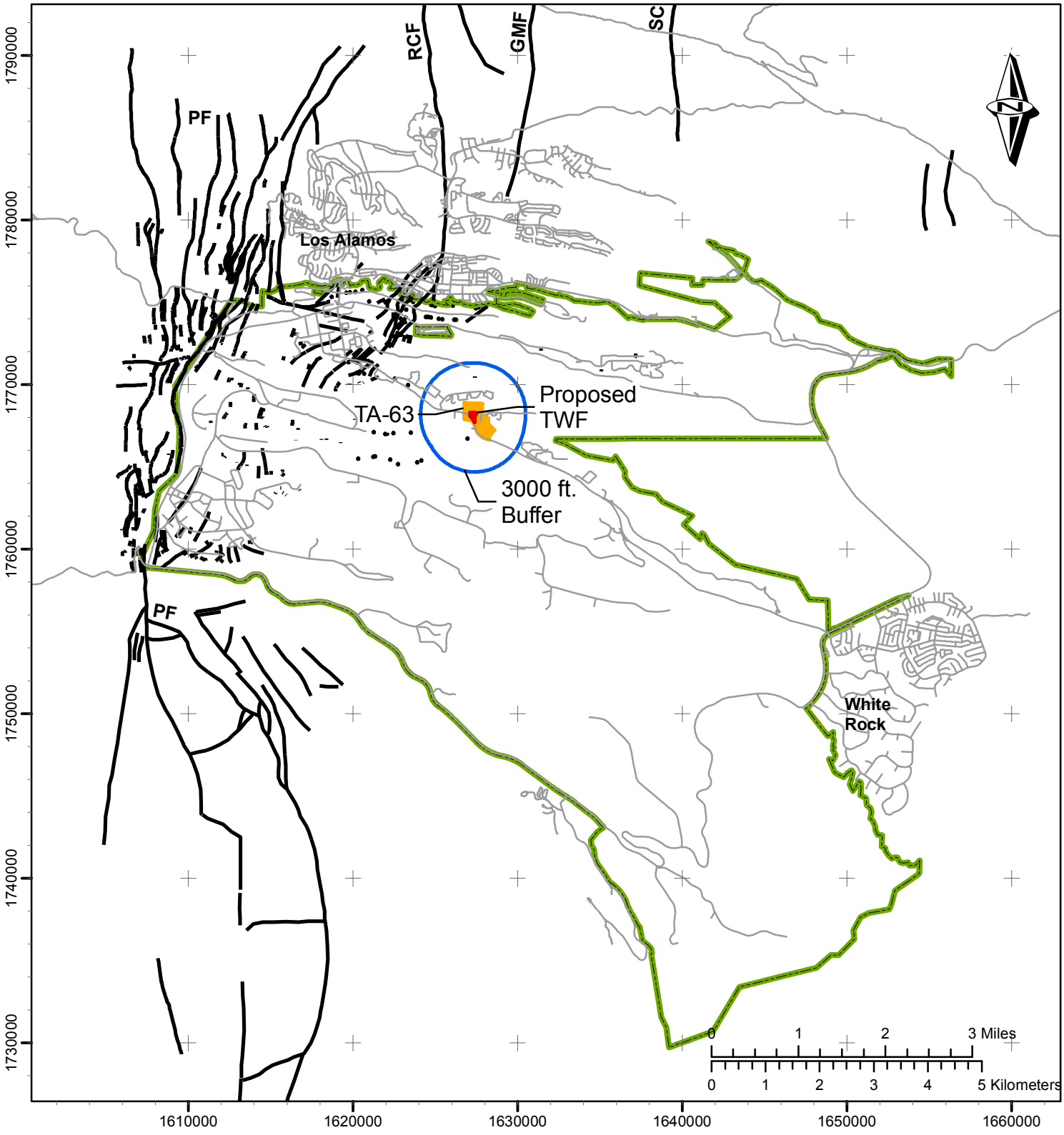

Figure 1:
Map of the Pajarito Fault System in the Vicinity of Los Alamos National Laboratory

Legend
- Planned TWF area
- 3000' buffer
- Road
- LANL boundary
- TA-63 boundary
- Identified Offsets
- Faults

State Plane Coordinate System
New Mexico Central Zone
1983 North American Datum
Grid Provides Units in Feet

GISLab Map No. m202208, rev. 1
GISLab Req. No. 14327
Document No. EES-16-SHG-2010-001
Cartography by Richard E. Kelley
December 20, 2010

Work Performed on Behalf of the TWF Project
Los Alamos National Laboratory
Los Alamos, NM 87545

Neither the United States Government nor Los Alamos National Security (LANS), LLC nor any of their employees makes any warranty, express or implied, including the warranties of merchantability and fitness for a particular purpose, or assumes any legal liability or responsibility for the accuracy, completeness, or usefulness of any information, apparatus, product, or process disclosed, or represents that its use would not infringe privately owned rights.

GISLab
Los Alamos National Laboratory

Los Alamos
NATIONAL LABORATORY
EST. 1943

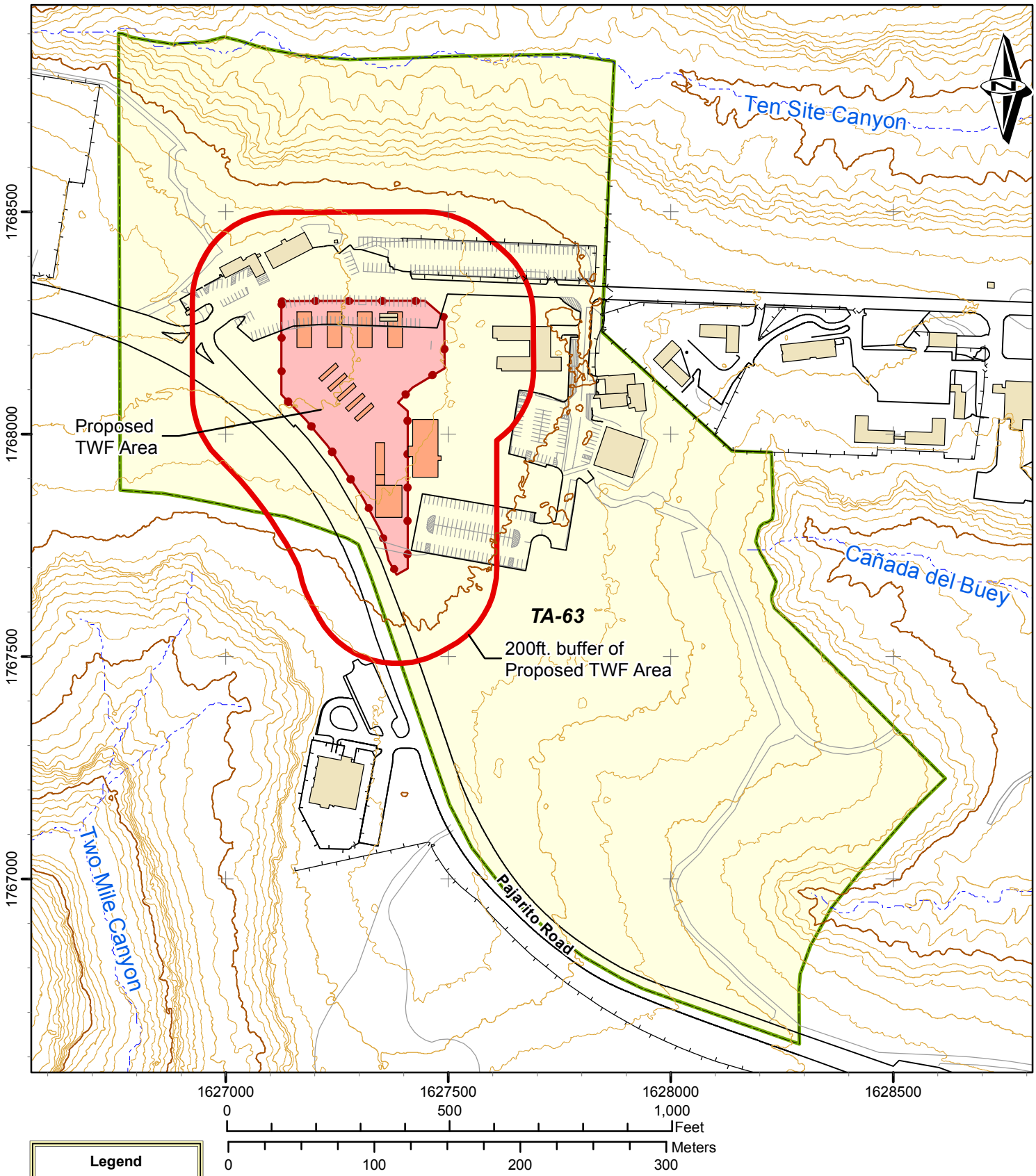

Legend

- TA-63 area
- Existing facility
- Planned TWF structure
- Existing fence
- Proposed TWF area
- 200' buffer
- Drainage
- Paved road
- Parking
- Dirt road

Figure 2. Details of RCRA Permitted Area of Proposed TWF, TA-63

State Plane Coordinate System
New Mexico Central Zone
1983 North American Datum
Grid Provides Units in Feet

GISLab Map No. m202209, rev. 2
GISLab Req. No. 14327
Document No. EES16-SHG-2010-001
Cartography by Richard E. Kelley
August 1, 2011

Contour interval = 10ft

Work Performed on Behalf of the TWF Project
Los Alamos National Laboratory
Los Alamos, NM 87545

Neither the United States Government nor Los Alamos National Security (LANS), LLC nor any of their employees makes any warranty, express or implied, including the warranties of merchantability and fitness for a particular purpose, or assumes any legal liability or responsibility for the accuracy, completeness, or usefulness of any information, apparatus, product, or process disclosed, or represents that its use would not infringe privately owned rights.

Los Alamos NATIONAL LABORATORY EST. 1943

GISLab Los Alamos National Laboratory

Los Alamos Area Seismic Events

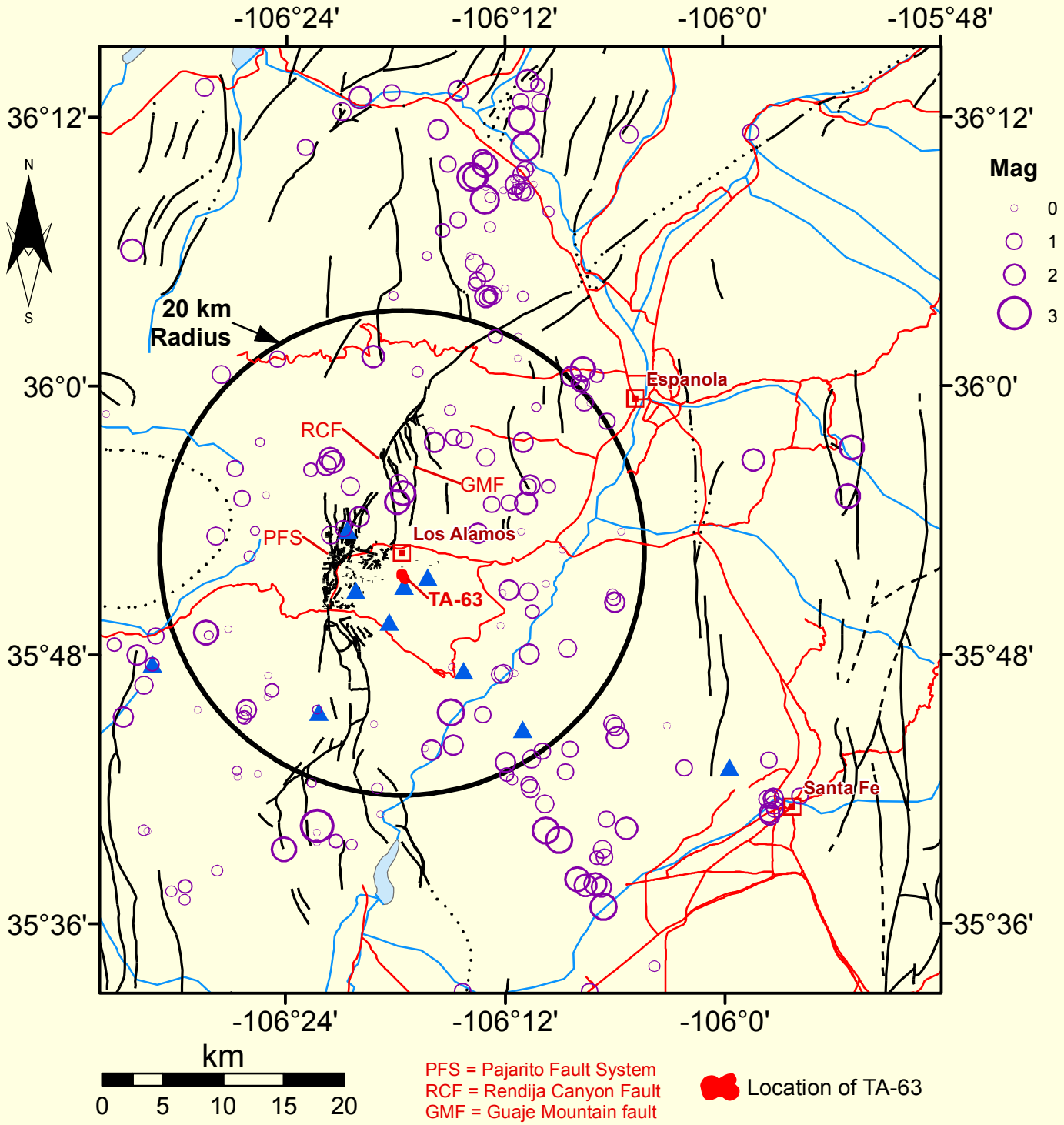

219 Total Local Earthquakes (1973 - 2007)
89 Earthquakes within 20-km Radius of LANL
Blue Triangles: LASN Seismic Stations
Purple Circles: Earthquake Locations and Magnitudes

Figure 3

m202271_earthquakes_20110803

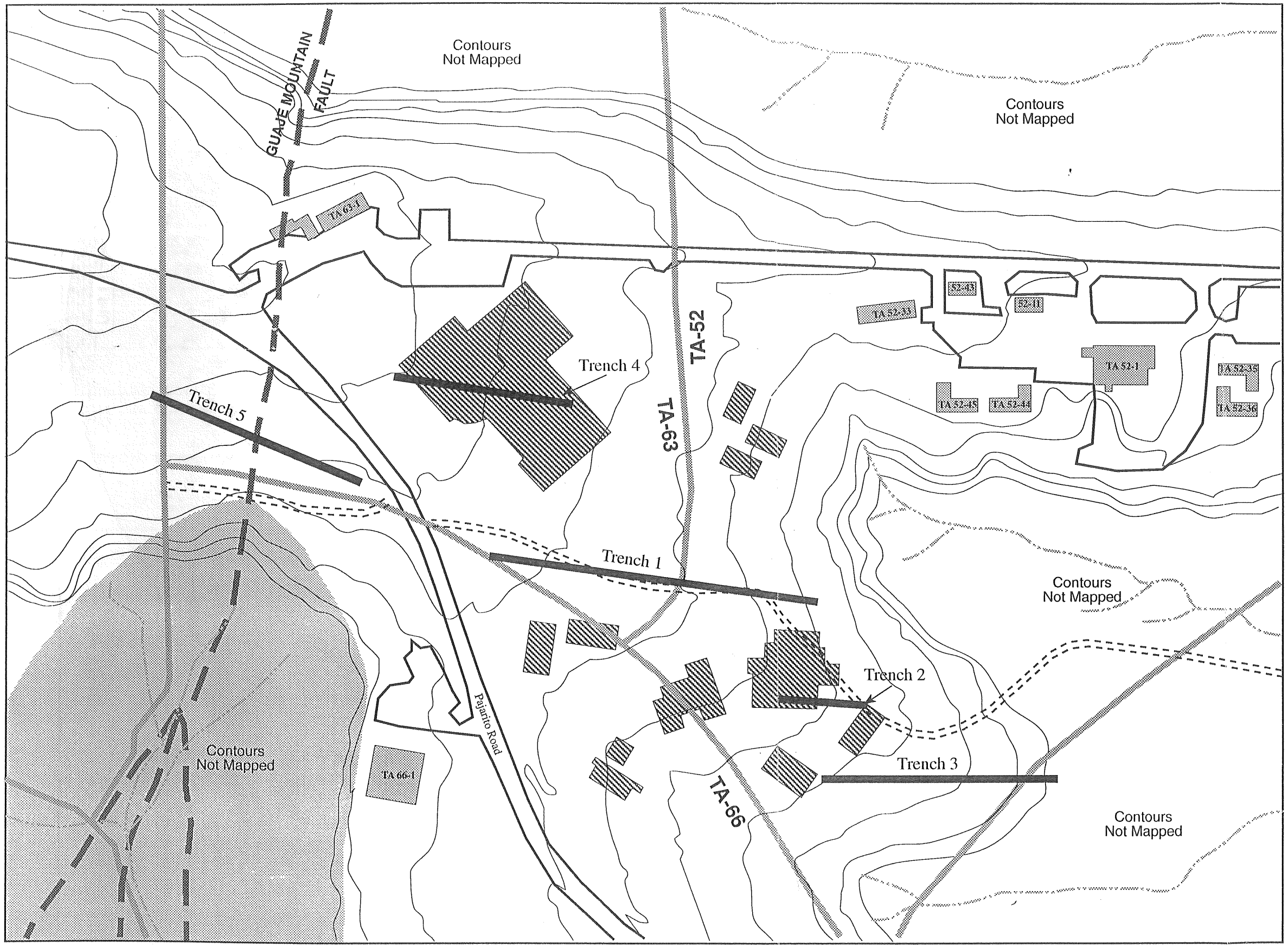

LEGEND

- Proposed new facilities
- TA 52-1 — Existing structures
- Zone of abundant fracturing (Vaniman and Wohletz, 1990)
- Paved road
- Dirt road
- 10 ft Contour
- Stream
- Trench
- Projected trace of the Guaje Mountain fault (Vaniman and Wohletz, 1990; Wong et al., 1993)
- Technical area boundary

N

SCALE
0 50 100 m

Base map: University of California
Los Alamos National Laboratory
Earth & Earth Sciences Division
FIMAD (Facility for Information Management Analysis and Display)
Plot ID: G101144, Date: Aug 19, 1993

Project No. 92C0774	LANL TA-63	MAP SHOWING TRENCH LOCATIONS
Woodward-Clyde Federal Services		

Figure 4
EES16-SHG-2010-001

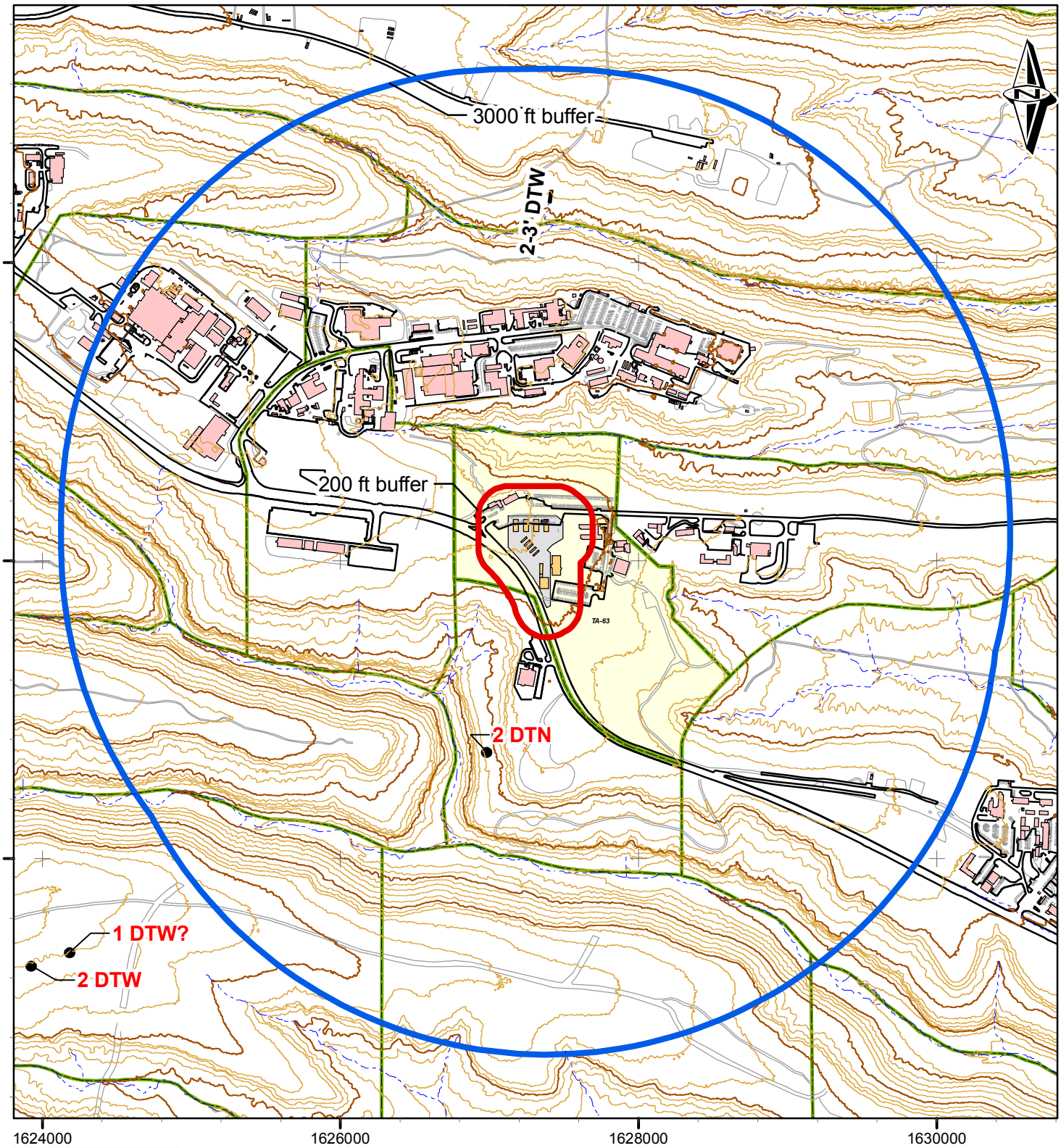

Legend

- Drainage
- Planned facility
- 200' buffer
- 3000' buffer
- Existing facility
- Paved road
- Parking
- Dirt road
- Faults
- Identified Offsets
- Planned fenced area
- TA-63 area
- Other tech ares

0 500 1,000 Feet

0 100 200 300 Meters

200ft and 3000ft Buffers of Proposed TWF

State Plane Coordinate System
New Mexico Central Zone
1983 North American Datum
Grid Provides Units in Feet

GISLab Map No. m202210, rev. 0
GISLab Req. No. 14327
Cartography by Richard E. Kelley
December 01, 2010

Contour interval = 20 ft

Work Performed on Behalf of ENV-RCRA
Los Alamos National Laboratory
Los Alamos, NM 87545

Neither the United States Government nor Los Alamos National Security (LANS), LLC nor any of their employees makes any warranty, express or implied, including the warranties of merchantability and fitness for a particular purpose, or assumes any legal liability or responsibility for the accuracy, completeness, or usefulness of any information, apparatus, product, or process disclosed, or represents that its use would not infringe privately owned rights.

DRAFT

Los Alamos NATIONAL LABORATORY EST. 1943

GISLab Los Alamos National Laboratory

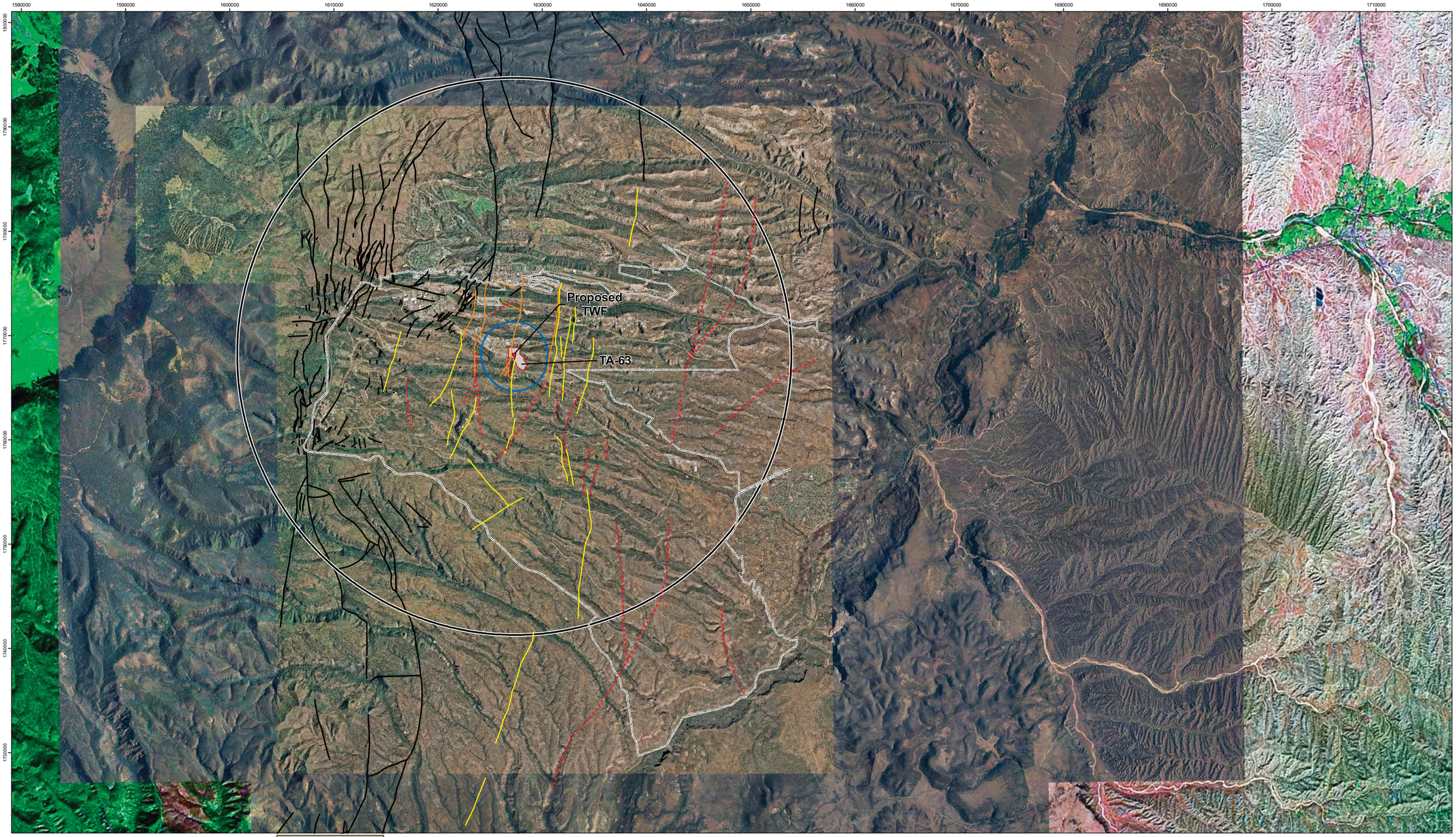

0 1 2 3 Miles

0 1 2 3 4 5 Kilometers

- Linear features -this study
- Lineaments, Vaniman & Wohletz, 1990
- Lineaments, Wong, et al, 1995
- LANL boundary
- Planned fenced area
- TA-63 area
- 3000' buffer
- 5-mile buffer
- Faults, Lewis, et al, 2009

State Plane Coordinate System
New Mexico Central Zone
1983 North American Datum
Grid Provides Units in Feet

GISLab Map No. m202211, rev. 0
GISLab Req. No. 14327
Cartography by Richard E. Kelley
December 01, 2010

Work Performed on Behalf of ENV-RCRA
Los Alamos National Laboratory
Los Alamos, NM 87545

Neither the United States Government nor Los Alamos National Security (LANS), LLC nor any of their employees makes any warranty, express or implied, including the warranties of merchantability and fitness for a particular purpose, or assumes any legal liability or responsibility for the accuracy, completeness, or usefulness of any information, apparatus, product, or process disclosed, or represents that its use would not infringe privately owned rights.

Plate 1:
Color Orthophoto Map of the Area Surrounding Technical Area 63

Los Alamos NATIONAL LABORATORY EST. 1943

GISLab Los Alamos National Laboratory

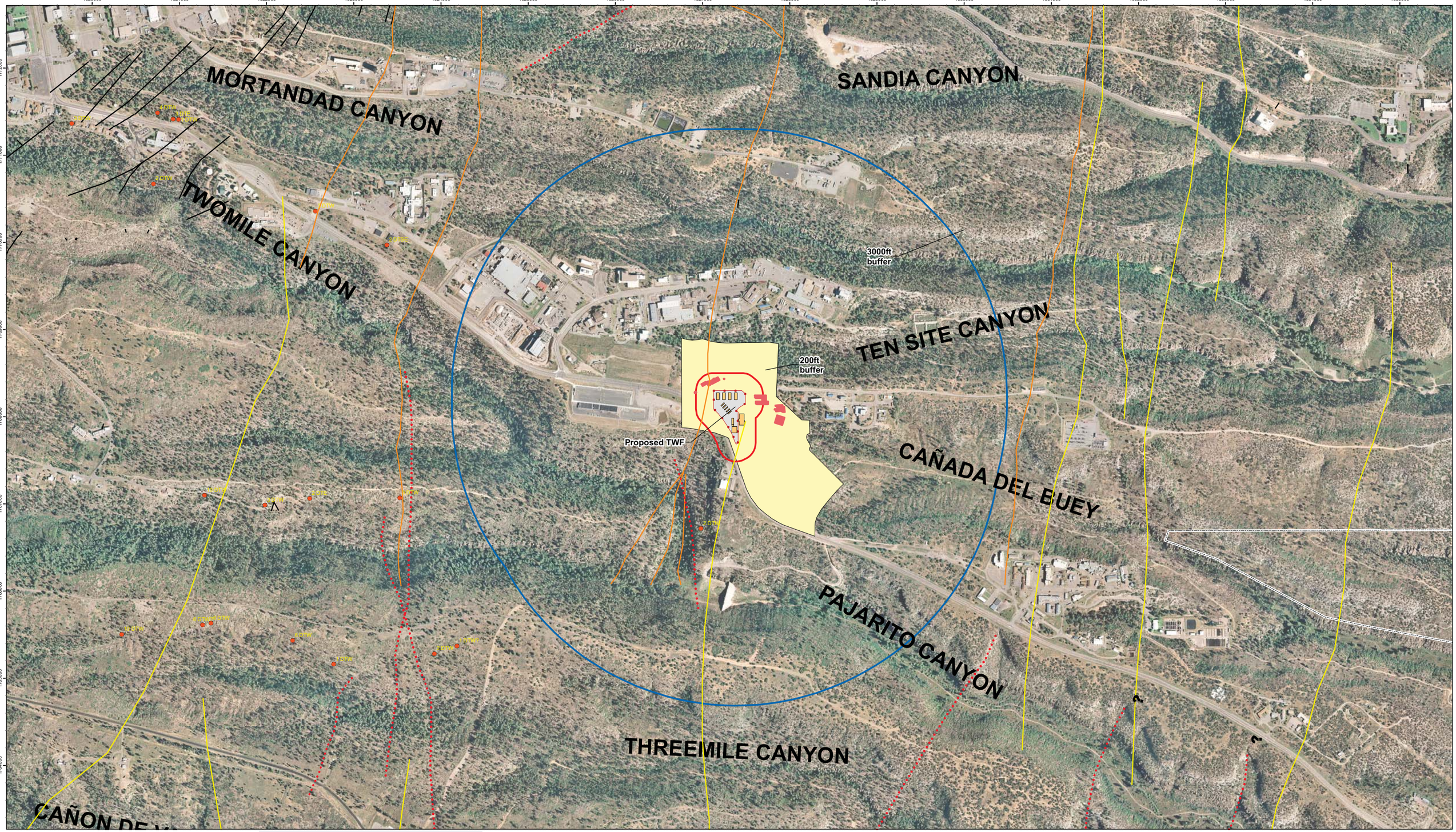

0 1,000 2,000 Feet

0 300 600 Meters

Legend

- Linear features -this study
- Lineaments, Vaniman & Wohletz, 1990
- Lineaments, Wong, et al, 1995
- Planned facility
- Planned fenced area
- Structure
- LANL boundary
- 3000
- 200' buffer
- Identified Offsets
- TA-63
- Faults, Lewis et al., 2009

State Plane Coordinate System
New Mexico Central Zone
1983 North American Datum
Grid Provides Units in Feet

GISLabMap Nom202212rev.0
GISLabReq. No.14327
Cartography by Richard E. Kell
December 01, 2010

Work Performed on Behalf of ENV-RCRA
Los Alamos National Laboratory
Los Alamos, NM 87545

Neither the United States Government nor Los Alamos National Security (LANS), LLC nor any of their employees makes any warranty, express or implied, including the warranties of merchantability and fitness for a particular purpose, or assumes any legal liability or responsibility for the accuracy, completeness, or usefulness of any information, apparatus, product, or process disclosed, or represents that its use would not infringe privately owned rights.

Plate 2:
Ortho-photographic Map of the Area Surrounding Technical Area 63

Aerial photography by Bohannan-Huston, Inc.
Data collected 9/7/2008 - 9/16/2008.

Los Alamos NATIONAL LABORATORY EST. 1943

GISLab Los Alamos National Laboratory

Attachment E

Isco™ Water Sampler

Isco Product Data

Isco 6712FR Fiberglass Refrigerated Sampler

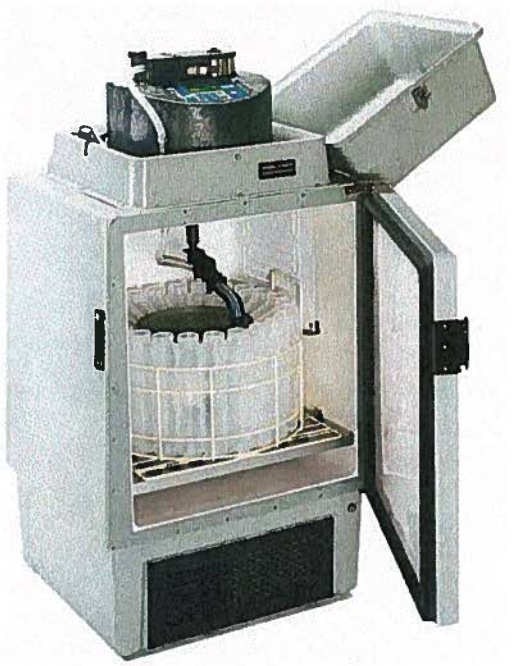

The 6712FR is a sequential or composite refrigerated sampler designed for indoor or outdoor applications where rugged, corrosion-resistant construction is required.The extensive range of programming modes lets you select the most suitable routine for your application. Programming is fast and simple, with on-line help just a key stroke away.

The environmentally-sealed 6712 controller delivers maximum accuracy and easily handles all of your sampling applications, including:

- wastewater effluent
- stormwater monitoring
- CSO monitoring
- permit compliance
- pretreatment complience

In the Standard Programming Mode, the controller walks you through the sampling sequence step-by-step, allowing you to choose all parameters specific to your application. Selecting the Extended Programming Mode lets you enter more complex programs.

Factory installed options

An optional built-in telephone modem lets you change programs and download data remotely, from a touch-tone phone. It also has dial-out alarm features.

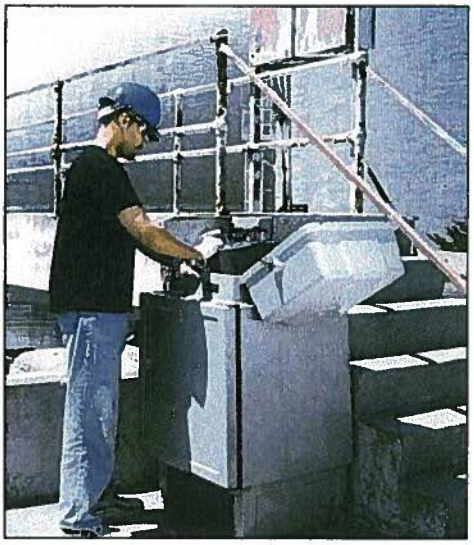

For automatic documentation of sample storage temperature, specify the 6712FR with optional temperature sensor. With this thermally ballasted sensor, the 6712 controller can log compartment temperatures at programmable intervals with 0.1°C precision.

Versatile, Tough, and Reliable

Isco FR samplers feature a corrosion-proof refrigerator cabinet molded from polyester resin fiberglass and supported by a stainless steel frame. A UV-resistant gel coat provides a smooth, non-porous finish for added protection and easy cleaning.

The 6712FR uses thick, foamed-in-place insulation to keep samples preserved at the EPA-recommended 39°F (4°C). An automatically controlled, built-in heater ensures that samples won't freeze, even when ambient temperatures drop to -20°F (-29°C). Coolant is environmentally safe R134a. Durable powder-coated epoxy, phenolic paint, and polyester tubing, protect refrigeration components against corrosion.

The 6712FR provides long service life in corrosive environments, and can be used outdoors without an enclosure.

Specifications

Isco 6712FR	
Size (HxWxD):	49.3 x 26 x 26 inches (125 x 66 x 66 cm)
Weight:	Dry, 160 lbs (73 kg)
Bottle configurations:	24 1-liter PP or 350-ml glass 24 ProPak 1-liter disposable sample bags 12 2.5-liter wedge PE 8 2-liter PE or 1.8-liter glass. 2 2-gallon (7.5-liter) PE or 2.5-gallon (9.4-liter) glass 1 2.5-gallon (9.4 liter) PE or glass 1 4-gallon (15-liter) PE 1 5.5-gallon (21-liter) PE or 5 gallon (19 liter) glass
Refrigerator Body	Fiberglass reinforced plastic with UV-resistant gel coat
Power Requirements:	120 VAC, 60 Hz; or 240 VAC, 50 Hz (specify)
Pump	
Intake suction tubing:	
Length	3 to 99 feet (1 to 30 m)
Material	Vinyl or Teflon
Inside dimension	3/8 inch (1 cm)
Pump tubing life:	Typically 1,000,000 pump counts
Maximum lift:	28 feet (8.5 m)
Typical Repeatability	±5 ml or ±5% of the average volume in a set
Typical line velocity at Head height: of	
3 ft. (0.9 m)	3.0 ft./s (0.91 m/s)
10 ft. (3.1 m)	2.9 ft./s (0.87 m/s)
15 ft. (4.6 m)	2.7 ft./s (0.83 m/s)
Liquid presence detector:	Non-wetted, non-conductive sensor detects when liquid sample reaches the pump to automatically compensate for changes in head heights.

Controller	
Weight:	13 lbs. (5.9 kg)
Size (HxWxD)	10.3 x 12.5 x 10 inches (26 x 31.7 x 25.4 cm)
Operational temperature:	32° to 120°F (0° to 49°C)
Enclosure rating:	NEMA 4X, 6 (IP67)
Program memory:	Non-volatile ROM
Flow meter signal input:	5 to 15 volt DC pulse or 25 millisecond isolated contact closure.
Number of composite samples:	Programmable from 1 to 999 samples.
Clock Accuracy:	1 minute per month, typical, for real time clock
Software	
Sample frequency:	1 minute to 99 hours 59 minutes, in 1 minute increments. Non-uniform times in minutes or clock times 1 to 9,999 flow pulses
Sampling modes:	Uniform time, non-uniform time, flow, random interval event. (Flow mode is controlled by external flow meter pulses.)
Programmable sample volumes:	10 to 9,990 ml in 1 ml increments
Sample retries:	If no sample is detected, up to 3 attempts; user selectable
Rinse cycles:	Automatic rinsing of suction line up to 3 rinses for each sample collection
Program storage:	5 sampling programs
Sampling Stop/Resume:	Up to 24 real time/date sample stop/resume commands
Controller diagnostics:	Tests for RAM, ROM, pump, display, and distributor

Ordering Information

Note: Bottle configuration, suction line, and strainer must be ordered separately. Many options and accessories are available for 6712 Samplers; see separate literature for 700 Series Modules and other components to expand your monitoring capabilities.

Description	Part No.
6712FR Refrigerated Sampler, 120VAC 60Hz Includes controller, distributor arm, instruction manual, pocket guide.	68-6710-072
6712FR Refrigerated Sampler, 230VAC 50Hz includes controller, distribution arm instruction manual, pocket guide.	68-6710-073
6712FR with temperature logging, 120VAC 60Hz As above, with internal temperature sensor	68-6710-144
6712FR with temperature logging, 230VAC 50Hz As above, with internal temperature sensor	68-6710-145

The 6712 Controller is also an SDI-12 data logger, and has many optional capabilities. Please contact Isco or your Isco distributor for more information.

ISCO®
Water is life. Protect it.

Teledyne Isco, Inc.
4200 Superior Street
Lincoln NE 68504 USA
Phone: (402) 464-0231
USA and Canada: (800) 228-4373
Fax: (402) 465-3022
E-Mail: iscoinfo@teledyne.com
Internet: www.isco.com

Isco reserves the right to change specifications without notice.
©2007 Teledyne Isco, Inc. • L-1109 • 2/07

ATTACHMENT F
TECHNICAL AREA 63
TRANSURANIC WASTE FACILITY
CLOSURE PLAN

TABLE OF CONTENTS

LIST OF TABLES 3
LIST OF FIGURES 4
1.0 INTRODUCTION 6
2.0 DESCRIPTION OF THE UNIT TO BE CLOSED 6
UNIT TO BE CLOSED - structures within the concrete pad: 6
OTHER TWF STRUCTURES: 6
4.2 Closure Schedule 7
5.0 CLOSURE PROCEDURES 8
5.1 Removal of Waste 8
5.2 Records Review and Structural Assessment 8
5.2.1Records Review 8
5.2.2 Structural Assessment 8
5.3 Decontamination and Removal of Equipment and Structures 9
5.3.1 Decontamination of Equipment 9
5.3.2 Removal of Structures and Related Equipment 9
5.4 Equipment Used During Decontamination Activities 10
6.0 VERIFICATION CRITERIA 10
6.1 Alternative Closure Requirements 10
7.0 SAMPLING AND ANALYSIS PLAN 10
7.1 Decontamination Verification 11
7.2 Sample Collection Procedures 12
7.2.1 Liquid Sampling 12
7.2.2 Wipe Sampling 12
7.2.3 Soil Sampling 12
7.2.4 Cleaning of Sampling Equipment 12
7.3 Sample Management Procedures 12
7.3.1 Sample Documentation 13
7.3.1.1 Chain-of-Custody 13
7.3.1.2 Sample Labels and Custody Seals 13
7.3.1.3 Sample Logbook 13
7.3.2 Sample Handling, Preservation, and Storage 14
7.3.3 Packaging and Transportation of Samples 14
7.4 Sample Analysis Requirements 14
7.4.1 Analytical Laboratory Requirements 14
7.4.2 Quality Assurance/Quality Control 15
7.4.2.1 Field Quality Control 15
7.4.2.2 Analytical Laboratory QC Samples 15
7.4.3 Data Reduction, Verification, Validation, and Reporting 15

7.4.4 Data Reporting Requirements 15
8.0 WASTE MANAGEMENT 16
9.0 CLOSURE CERTIFICATION REPORT 16
10.0 DEPARTMENT CLOSURE ASSESSMENT 17
11.0 REFERENCES 17

LIST OF TABLES

TABLE NO.	TITLE
1	TWF Unit Capacities and Waste Categories
2	Closure Schedule for the TWF Unit
3	Potential Waste Materials, Waste Types, and Disposal Options
4	Hazardous Waste Constituents of Concern at the TWF
5	Summary of Proposed Analytical Methods
6	Recommended Sample Containers, Preservation Techniques, and Holding Times
7	Recommended Quality Control Sample Types, Applicable Analyses, Frequency, and Acceptance Criteria
8	List of Permitted Unit Equipment

LIST OF FIGURES

FIGURE NO.	TITLE
F-1	Flowchart of Closure Progression for TWF
F-2	TWF Soil Sampling Grid

TRANSURANIC WASTE FACILITY
CLOSURE PLAN

1.0 INTRODUCTION

This closure plan describes the activities necessary to close the permitted mixed waste Transuranic Waste Facility (TWF) at Technical Area (TA)-63 at the Los Alamos National Laboratory (Facility) hereinafter referred to as the "Unit To Be Closed," or the "Unit." The information provided in this closure plan addresses the closure requirements specified in Permit Part 9 and the Code of Federal Regulations (CFR), Title 40, Part 264, Subparts G and I for waste management units operated at the Facility under the Resource Conservation and Recovery Act (RCRA) and the New Mexico Hazardous Waste Act.

Until closure is complete and has been certified in accordance with Permit Part 9.5 and 40 CFR §264.115, a copy of the approved closure plan or the hazardous waste facility permit containing the plan, any approved revisions to the plan, and closure activity documentation associated with the closure will be on file with hazardous waste compliance personnel at the Facility and at the U.S. Department of Energy (DOE) Los Alamos Site Office. Prior to closure of the unit, this closure plan may be amended in accordance with Permit Section 9.4.8 to provide updated sampling and analysis plans and to incorporate updated decontamination technologies. Amended closure plans shall be submitted to the New Mexico Environment Department (the Department) for approval prior to implementing closure activities.

2.0 DESCRIPTION OF THE UNIT TO BE CLOSED

The TWF is located in TA-63 at the junction of Pajarito Road and Puye Road, within the triangle formed by Building 63-111 to the east, Puye Road to the north, and Pajarito Road to the southwest. It is designed, constructed, and commissioned as a Hazard Category (HC)-2 nuclear facility permitted as Resource Conservation and Recovery Act (RCRA) Storage Facility for TRU, mixed TRU and hazardous wastes. Refer to Figure 2-5 of this permit modification request for the TWF Site Plan.

UNIT TO BE CLOSED - STRUCTURES WITHIN THE CONCRETE PAD:

- Storage Buildings: 63-0149, 63-0150, 63-0151, 63-0152, and 63-0153
- Storage and Characterization Building: 63-0154
- Forklift Charging Station: 63-0146
- Characterization Pads: 63-0155, 63-0156, and 63-0156
- Calibration Source and Matrix Module (CSMM) Building: 63-0158
- Equipment Storage Shed: 63-0159
- Retention Basin

Six buildings are designated for storage of TRU and Mixed TRU wastes in support of LANL DP programs and missions. One of the storage structures is used for both storage of larger-sized waste containers and for head space gas sampling and analysis. Certification of containers in accordance with WIPP Waste Acceptance Criteria (WAC) will occur at the three characterization and testing trailers. A concrete pad underlies the storage and characterization buildings and trailers, as well as the intra-site waste receiving and shipping area. The boundaries of the pad will be used to designate the RCRA-permitted portion of the TWF.

OTHER TWF STRUCTURES:

- Operations Support Building: 63-0144
- Canopy Building: 63-0145
- Forklift Charging Station: 63-0146
- Utility Building: 63-0147

- Fire Water Storage Tank: 63-0148

3.0 ESTIMATE OF MAXIMUM WASTE STORED

The TWF will be capable of storing/staging a minimum of 825 55-gallon drum/drum equivalents (D/DE) with overflow storage capacity up to 1,240 D/DE. On a yearly basis, the TWF will process 1100 D/DE per year, or 33000 D/DE or 1.815 million gallons during the lifetime of the facility – TRU Waste Facility Document No. 102355-PLAN-00005 Preliminary Project Execution Plan.

4.0 GENERAL CLOSURE REQUIREMENTS

The following sections describe the closure objectives and schedule for the permitted unit.

4.1 Closure Performance Standard

As required by Permit Section 9.2, the permitted unit will be closed to meet the following performance standards:
a. Remove all hazardous waste residues and hazardous constituents;
b. Ensure contaminated media do not contain concentrations of hazardous constituents greater than the clean-up levels established in accordance with Permit Sections 11.4 and 11.5. For soils the cleanup levels shall be established based on residential use. The Permittees must also demonstrate that there is no potential to contaminate groundwater.

If the Permittees are unable to achieve either of the clean closure standards above, they must:
c. control hazardous waste residues, hazardous constituents, and, as applicable, contaminated media such that they do not exceed a total excess cancer risk of 10^{-5} for carcinogenic substances and, for non-carcinogenic substances, a target Hazard Index of 1.0 for human receptors, and meet Ecological Screening Levels established under Permit Section 11.5;
d. minimize the need for further maintenance;
e. control, minimize, or eliminate, to the extent necessary to protect human health and the environment, the post-closure escape of hazardous waste, hazardous constituents, leachate, contaminated runoff, or hazardous waste decomposition products to the ground, groundwater, surface waters, or to the atmosphere; and
f. comply with the closure requirements of Permit Part 9 (*Closure*) and 40 CFR Part 264, Subparts G and I for container storage units.
Closure of the permitted unit will be deemed complete when:
1) All surfaces and equipment have been decontaminated, or otherwise properly disposed of; 2) closure has been certified by an independent, professional engineer licensed in the State of New Mexico; and
3) Closure certification has been submitted to, and approved by, the Department.

4.2 Closure Schedule

This closure plan is intended to address closure requirements for the permitted unit within the authorized timeframe of this Permit (see Permit Section 9.4.1). However, pursuant to 40 CFR §264.112(e), removing hazardous wastes and decontaminating or dismantling equipment in accordance with an approved closure plan may be conducted at any time before or after notification of closure. For the purposes of this closure plan, portable and temporary structures in this permitted unit such as transportainers are considered to be equipment by their design and to facilitate the closure schedule for the TWF.

Notification of closure will occur at least 45 days prior to when LANL expects to begin closure (see 40 CFR § 264.112(d)(1)). Closure activities will begin according to the requirements of 40 CFR § 264.112(d)(2). Notification of the structural assessment (assessment), as described in Section 5.2 of this closure plan, will occur in accordance with Permit Section 9.4.6.2.

Within 90 days of the final receipt of hazardous waste, LANL will conduct the records review (review) and assessment and submit an amended closure plan, if necessary, to the NMED for review and approval as a permit modification. Within five days of approval of the modified closure plan, if applicable, LANL will remove all stored waste and begin decontamination of unit structures, surfaces, and equipment. Decontamination verification sampling activities, and soil sampling if applicable, will be conducted to demonstrate that surfaces, related equipment, and media, if applicable, at the TWF meet the closure performance standards in Permit Section 9.2.

All closure activities, including submittal of a final closure certification report to the NMED for review and approval, will be completed within 180 days after commencement of closure. The final closure report and certification will be submitted to NMED 240 days after initiating closure. In the event that closure of the TWF cannot proceed according to schedule, LANL will notify the NMED in accordance with the extension request requirements in Permit Section 9.4.1.1.

5.0 CLOSURE PROCEDURES

The following sections describe the procedures to be used for closure of the permitted unit. The procedures will proceed in the order described although the operating records review described in Section 5.2.1 may be started earlier. Figure F-1 provides an outline of the general procedures that will be conducted and the decision-making strategy for the closure activities.

5.1 Removal of Waste

In accordance with Permit Part 9.4.2, all stored hazardous waste will be removed from the permitted unit scheduled for closure. Depending upon their size, containers will be removed with forklifts, container dollies, pallets, or manually. Containers will be placed on flat bed trucks, trailers, or other appropriate vehicles for transport from the permitted unit. Appropriate shipping documentation will be prepared for the wastes during transport. All hazardous waste containers will be moved to a permitted on-site storage unit or a permitted off-site treatment, storage, or disposal facility.

5.2 Records Review and Structural Assessment

Before starting decontamination and sampling activities, the operating and inspection records for the permitted unit will be reviewed and a structural assessment of the unit will be conducted to determine any finding(s) or action(s) that may influence closure activities or additional sampling locations.

5.2.1Records Review

The Facility Operating and Inspection Records shall be reviewed in accordance with Permit Section 9.4.6.1. The goals of this review will be to:

Confirm the specific hazardous waste constituents of concern; and

Confirm additional sampling locations (e.g., locations of any spills or chronic conditions identified in the Operating Record).

5.2.2 Structural Assessment

A structural assessment (assessment) of the unit's physical condition will be conducted in accordance with Permit Section 9.4.6.2 and documented with photographs and drawings, as necessary. If the assessment reveals any evidence of a release (e.g., stains) or damage (e.g., cracks, gaps, chips) to the flooring or building materials, the Permittees must incorporate these locations as additional sampling points in the updated sampling and analysis plan (see Section 7.0) and include the applicable sampling methods and procedures. If evidence of a release or damage is present, a wipe sample or a representative sample of the media (e.g., concrete chip) will be collected according to the procedures in Section 7.2

5.3 Decontamination and Removal of Equipment and Structures

The following sections describe the decontamination procedures to be used for closure of the permitted unit.

5.3.1 Decontamination of Equipment

The decontamination needs for equipment present in the permitted unit are based on whether the equipment will be managed as waste or how the equipment can be decontaminated without damage. Equipment that is managed as waste or portable equipment that can be used in other waste management units will not be decontaminated before it is removed from the TWF. All materials and equipment that are removed as waste or cannot be decontaminated will be solid and potentially hazardous waste (as defined by RCRA) when removed and will be managed as described in Section 8.0 of this closure plan and Permit Part 9. Equipment and operating machinery that needs decontamination and that is not sensitive to water intrusion such as fixed storage structures, characterization trailers, transportainers that have stored mixed waste, and/or equipment will be pressure or steam washed as dictated by assay. Other equipment needing decontamination that is sensitive to water such as portable air monitors, electronic devices or tools, PPE, portable eyewashes, and spill cleanup equipment containers in the storage buildings will be cleaned with a wipe-down wash. The lists of equipment needing decontamination will be reviewed during the pre-closure and structural assessment described in Part 9 of this Permit (see Table 8).

Water resistant equipment at the permitted unit will be decontaminated by steam cleaning using water or pressure washing with a solution consisting of a surfactant detergent (e.g., Alconox®) and water. Wipe-down washing with a solution consisting of a surfactant detergent (e.g., Alconox®) and water may be conducted on equipment within the unit if containment cannot be established for the steam cleaning water or pressure wash solution or these methods will damage the equipment preventing further use or recycling. The quantity of the wash solution will be minimized by dispensing from buckets, spray bottles, or other types of containers. Cheesecloth, rags, or other absorbent materials will be used to wipe down the equipment after being wetted in the wash solution or after spraying solution onto the equipment. If necessary, portable berms or other devices (e.g., absorbent socks, plastic sheeting, wading pools, or existing secondary containment) designed to collect and provide containment will collect excess wash water and provide containment during the decontamination process. Wash solution will not be allowed to enter the fire suppression water drains.

Portable equipment at the permitted unit may also be swiped or monitored using radioassay procedures before the equipment is removed. Any detected radioactivity above free release levels may serve as an indicator, in accordance with Permit Part 9.4.4, for potential contamination by hazardous constituents.

5.3.2 Removal of Structures and Related Equipment

Storage structures will be deconstructed upon completion of decontamination. The characterization trailers – as a whole, will be removed from the TA-63 Unit location upon completion of the decontamination process. Construction materials will be characterized using the procedures contained in Permit Attachment C and managed for reuse, recycle, or waste disposition based upon that characterization.

After additional sampling locations have been determined as a result of the structural assessment, the concrete pad, materials associated with the concrete pad and a minimum of 6 inches of the base course and soil underlying the asphalt pad will be removed. The Permittees will add additional sampling locations if any stains attributable to waste management activities on the pad are evident in the underlying soil.

During the structural assessment, the use of dust suppression procedures at the site will be assessed using the Permittees' construction policies to restrict spreading of any hazardous waste constituents before sampling can be implemented. The option of removing small areas of concrete at sampling locations

where contamination is suspected (i.e., spill or staining sites) to allow sampling without disturbing the surrounding area prior to the general removal of the pad will be assessed at that time.

5.4 Equipment Used During Decontamination Activities

Reusable protective clothing, tools, and equipment used during closure activities will be cleaned with a wash water solution. The solution will be characterized and managed as a hazardous waste if appropriate. Residue, disposable equipment, and equipment that cannot be decontaminated will be containerized and managed as waste.

6.0 VERIFICATION CRITERIA

Successful decontamination to demonstrate clean closure of the permitted unit will meet the criteria outlined in Permit Part 9 including the following:

No detectable RCRA-regulated constituent residues from the management of authorized RCRA-regulated wastes are identified in samples collected during closure activities.

Analytical results of samples collected during decontamination verification activities identify no statistically significant concentrations of RCRA regulated hazardous constituents, above appropriate baseline/background data:

Baseline/background for liquid sampling results will be the discrete analytical results for a baseline (or blank) sample obtained from the verification solution prior to its use for the verification (clean-up confirmation) wipe down;

Baseline/background levels for wipe sample analytical results will be equivalent to the analytical results of an unused wipe media sample (blank); or

Baseline/background soil analytical results will be established in coordination with the corrective action activities described in Section 6.1.

6.1 Alternative Closure Requirements

If the decontamination verification sampling activities discussed in Section 7.1 of this closure plan indicate that residual contamination is present in the soil underlying TWF, alternative closure requirements may be applied to the closure as allowed by Part 9 of this Permit and 40 CFR §264.110(c). This provision allows for the replacement of the requirements in this closure plan with alternative requirements contained in a separate enforceable document when the waste management unit is situated among solid waste management units or areas of concern, a release has occurred, and one or more of the units are likely to have contributed to the release.

7.0 SAMPLING AND ANALYSIS PLAN

This sampling and analysis plan (SAP) describes the sampling and analytical methods as well as the quality assurance and quality control (QA/QC) procedures that will be used to demonstrate that the permitted unit is closed in accordance with Permit Part 9 and all applicable closure requirements.

All samples will be collected from locations in accordance with the methods and procedures provided in Section 7.2 of this closure plan, Permit Part 9, and in accordance with QA/QC procedures included in this section. Samples will be analyzed by an independent laboratory for all of the constituents listed in 40 CFR Part 261 Appendix VIII and Part 264 Appendix IX subject to modification by this closure plan or as a result of the review described in Section 5.2 of this closure plan.

7.1 Decontamination Verification

Performance-based verification activities will be conducted at the permitted unit in order to verify that the surfaces of the permitted unit and its related equipment have been decontaminated (see Permit Sections 9.4.4.1 and 9.4.4.2) to meet the closure performance standards in Permit Section 9.2.

Performance-based activities will consist of the collection of soil samples from beneath the concrete pad of the unit and in additional sampling locations specified to meet the conditions of Permit Section 9.4.7.1.ii. One wipe sample from each piece of decontaminated equipment related to the permitted unit will be collected for decontamination verification. All samples will be collected and analyzed in accordance with the procedures in Sections 7.2 and 7.5 of this closure plan. The primary condition applicable to this waste management unit requires random sampling every 900 square feet in storage areas and 250 feet in loading areas utilized for RCRA waste management activities.

TWF defined loading areas will be in the loading/unloading canopy and at each characterization trailer. One soil sample will be taken in any area of the TWF where contamination is known to have penetrated through the concrete or that was identified for specific sampling in the structural assessment.

The waste management activities that will occur in the storage structures involve moving waste to storage stacks or other locations directly without staging in a loading area. Thus, only the 900 square foot sampling condition for storage will apply in the areas covered by the storage buildings themselves.

Figure F-2 illustrates the proposed sampling grid for the permitted unit. At the time of sampling, the precise location of the sample will be randomly selected from within each 900 square feet sampling box. This location will be determined by applying a sub-grid of potential sampling points followed by random selection of the exact point. This sampling strategy will result in a minimum of 30 samples (unit as a whole is approximately 27000 square feet) taken from the TWF concrete pad. If it is determined at the time site assessment occurs, that there is need to take additional samples within the area of the sampling box (e.g., stained cracks in the concrete pad), these locations will be sampled within the grid sampling box as judgmental samples, replacing the random sample. In addition to the 30 samples collected from the 900 square foot grids, 3 samples will be collected (truck entrance, truck exit and forklift entrance/exit) of the loading/unloading canopy; one sample each from the loading/unloading point for the RTR and HENC trailers; one sample from the loading side and one from the unloading (opposite side) of the SuperHENC trailer.

Additionally, Permit Part 9.4.7.ii.a includes a condition that requires collection of samples from beneath every ten feet of underground pipe. The concrete pad has been designed and will be built to direct storm water and fire suppression water by sheet flow to the retention basin. For drainage purposes, the unit is divided into north and south sections by the 5 feet wide and 3 inches deep valley gutter. The north side of the unit - where all regulated waste management will occur in permitted buildings – drains to the retention basin. The south side drainage sheet flows generally to the southeast toward TA-63 parking lots. At least one wipe sample will be collected at the discharge point for the retention basin to determine the need for further sampling. The discharge point is a manually activated valve to the underground piping system; should standing liquid be present at the pipe discharge point, an additional liquid sample will be collected.

Permit Part 9.4.7.1.ii.a also states that samples be taken at liquid discharge points associated with the permitted unit. Storm water flow at the TWF will be directed across the pad by the south-ward slope and. The slope below the curbing is protected with rock and concrete. Concrete curbing also extends along the west and partially the south sides of the pad and ends at a concrete and rock drainage structure. The remainder of the south side of the pad is uncurbed. A soil sample will be taken at the drainage structure and at 30 foot intervals just off the pad along the uncurbed portion of the south side. The soil sampling grid is shown in Figure F-2.

Design-based activities will consist of decontaminating at least two times (*see* Permit Section 9.4.3.1) the permitted unit's related equipment (*see* Permit Section 9.4.4.2). The design-based activities are intended

to achieve the performance standard in Permit Section 9.2 where there are no applicable sampling methods for the detection of certain compounds (i.e., volatile organic compounds) on structures and equipment. In the event that the wash medium (e.g., steam) or the choice of an additive (e.g., Alconox®) to the wash medium can be shown to provide sufficient decontamination of the compounds, the decontamination will be reduced to one time.

7.2 Sample Collection Procedures

Samples will be collected in accordance with the most recent and appropriate Facility sampling plan incorporating guidance from the U.S. Environmental Protection Agency (EPA, 1986 and EPA, 2002) and DOE (DOE, 1995), or other approved procedures.

7.2.1 Liquid Sampling

Liquid sampling will consist of grab samples of the liquid at the drain of the retention basin, if applicable, to ensure the drain system has not been contaminated. Liquid sampling will be conducted using glass or plastic tubes, a composite liquid waste sampler, a bacon bomb, a bailer, or by pouring liquid into sample containers.

7.2.2 Wipe Sampling

When surface wipe samples are used to determine if residual hazardous constituents remain for structures or surfaces within the TWF, the samples will be taken in accordance with the National Institute of Occupational Safety and Health (NIOSH) *Manual of Analytical Methods*, Method 9100 (NIOSH, 1994), or other approved methodology. The appropriate use of wipe sample methods will consider the type of surface being sampled, the type of contaminant, the solution used, and the desired contaminant concentration detection limits. The NIOSH method includes wiping a 100 square centimeter area at each discrete location with a gauze wipe wetted with a liquid solution appropriate for the desired analysis (e.g., de-ionized water for lead). For wipe sampling, guidance from the analytical laboratory must be obtained prior to wipe verification sampling to confirm that the solution chosen for each analysis is appropriate for the analysis to be conducted and that wipe sampling is a proper technique for the analysis.

7.2.3 Soil Sampling

Soil will be sampled using a spade, scoop, auger, trowel, or other equipment as specified in approved methods for the type of analyte (i.e., EPA 1996 or 2002). The sample of soil will be taken from 0 to 6 inches of the surface. Samples will be kept at their at-depth temperature or lower, protected from ultraviolet light, sealed tightly in the recommended container, and analyzed within the specific holding times listed in Table 6.

7.2.4 Cleaning of Sampling Equipment

Reusable sampling equipment will be cleaned and rinsed prior to use. Sampling equipment rinsate blanks will be collected and analyzed only if reusable sampling equipment is used. Reusable decontamination equipment, including protective clothing and tools, used during closure activities will be scraped as necessary to remove residue and cleaned with a wash water solution. Sampling equipment will be cleaned prior to each use with a wash solution, rinsed several times with tap water, and air-dried or wiped dry to prevent cross contamination of samples. A disposable sampler is considered clean if still in a factory-sealed wrapper. Residue, disposable decontamination equipment, and reusable decontamination equipment that cannot be decontaminated will be containerized and managed appropriately at an approved on-site facility.

7.3 Sample Management Procedures

The following information presents general sample management and sampling equipment cleaning procedures for closure of the permitted unit. Samples will be collected and transported using documented chain-of-custody and sample management procedures to ensure the integrity of the sample and provide an

accurate and defensible written record of the possession and handling of a sample from the time of collection through laboratory analysis. Sample collection equipment will include labels, chain-of-custody forms, EPA-certified clean containers, coolers, preservatives, and custody seals. The following provides a description of sample documentation; sample handling, preservation, and storage; and sample packaging and transportation requirements that will be followed during the sampling activities associated with the closure.

7.3.1 Sample Documentation

Sampling personnel will complete and maintain records to document sampling and analysis activities. Sample documentation will include sample identification numbers, chain-of-custody forms, analysis requested, sample logbooks detailing sample collection activities, and shipping forms (if necessary).

7.3.1.1 Chain-of-Custody

Chain-of-custody forms will be maintained by sampling personnel until the samples are relinquished to the analytical laboratory. One chain-of-custody form may be used to document all of the samples collected from a single sampling event. The sample collector will be responsible for the integrity of the samples collected until properly transferred to another person. The EPA considers a sample to be in a person's custody if it is:

- In a person's physical possession,
- In view of the person in possession, or
- Secured by that person in a restricted access area to prevent tampering.

The sample collector will document all pertinent sample collection data. Individuals relinquishing or receiving custody of the samples will sign, date, and note the time on the analysis request/chain-of-custody form. A chain-of-custody form must accompany all samples from collection through laboratory analysis. The completed original chain-of-custody form will be returned by the analytical laboratory and will become a part of the permanent record documenting the sampling effort.

7.3.1.2 Sample Labels and Custody Seals

A sample label will be affixed to each sample container. The sample label will include the following information:

- A unique sample identification number;
- Name of the sample collector;
- Date and time of collection;
- Type of preservatives used, if any; and
- Location from which the sample was collected.

A custody seal will be placed on each sample container to detect unauthorized tampering with the samples. These labels must be initialed, dated, and affixed by the sample collector in such a manner that it is necessary to break the seal to open the container.

7.3.1.3 Sample Logbook

All pertinent information on the sampling effort must be recorded in a bound logbook. Information must be recorded in ink and any cross outs must be made with a single line and the change initialed and dated by the author. The sample logbook will include the following information:

- The sample location,
- Suspected composition,
- Sample identification number,
- Volume/mass of sample taken,
- Purpose of sampling,
- Description of sample point and sampling methodology,
- Date and time of collection,
- Name of the sample collector,
- Sample destination and how it will be transported,
- Observations, and
- Names of personnel responsible for the observations.

7.3.2 Sample Handling, Preservation, and Storage

Samples will be collected and containerized in appropriate pre-cleaned sample containers. Table G.10-6 presents the requirements in SW-846 (EPA, 1986) for sample containers, preservation techniques, and holding times. Samples that require cooling to 4 degrees Celsius will be placed in a cooler with ice or ice gel or in a refrigerator immediately upon collection.

7.3.3 Packaging and Transportation of Samples

All packaging and transportation activities will meet safety expectations, QA requirements, DOE Orders, and relevant local, state, and federal laws (including 10 CFR and 49 CFR). Appropriate Facility documents establish these requirements for packaging design, testing, acquisition, acceptance, use, maintenance, and decommissioning and for on-site, intra-site, and off-site shipment preparation and transportation of general commodities, hazardous materials, substances, waste, and defense program materials.

Off-site transportation of samples will occur via private, contract, or common motor carrier; air carrier; or freight. All off-site transportation will be processed through the Facility packaging and transportation organization, unless the shipper is specifically authorized through formal documentation by that organization to independently tender shipments to common motor or air carriers.

7.4 Sample Analysis Requirements

Samples will be analyzed for the appropriate hazardous constituents included within 40 CFR Part 261 Appendix VIII and 40 CFR Part 264 Appendix IX that have been stored at the permitted unit over its operational history (see Table 4). Table 4 will be modified, as necessary, at the time of notification of closure to incorporate changes based on the permitted unit's records review. Samples will be analyzed by an independent laboratory using the methods outlined in Table 6. Analytes, test methods and instrumentation, target detection limits, and rationale for metals and organic analyses are presented in Table 5

7.4.1 Analytical Laboratory Requirements

The analytical laboratory will perform the detailed qualitative and quantitative chemical analyses specified in Section 7.5.2. This analytical laboratory will have:

A documented comprehensive QA/ QC program,

Technical analytical expertise,

A document control/records management plan, and

The capability to perform data reduction, validation, and reporting.

The selection of the analytical testing methods identified in Table 5 was based on the following considerations:

- The physical form of the waste,
- Constituents of interest,
- Required detection limits (e.g., regulatory thresholds), and
- Information requirements (e.g., waste classification).

7.4.2 Quality Assurance/Quality Control

Field sampling procedures and laboratory analyses will be evaluated through the use of QA/QC samples to assess the overall quality of the data produced. QC samples evaluate precision, accuracy, and potential sample contaminations associated with the sampling/analysis process and are described in the following sections, along with information on calculations necessary to evaluate the QC results. QA/QC samples will be collected in accordance with the Facility's most recent and appropriate sampling plan incorporating guidance from the EPA (EPA, 2002) and DOE (DOE, 1995), or other approved procedures. Analysis will be conducted in accordance with procedures given in SW-846 (EPA, 1986), or other approved procedures or methods.

7.4.2.1 Field Quality Control

The field QC samples that may be collected include trip blanks, field blanks, field duplicates, and equipment rinsate blanks. Table 7 presents a summary of QC sample types, applicable analyses, frequency, and acceptance criteria. QC samples will be given a unique sample identification number and submitted to the analytical laboratory as blind samples. QC samples will be identified on the applicable forms so that the results can be applied to the associated sample.

7.4.2.2 Analytical Laboratory QC Samples

QA/QC considerations are an integral part of analytical laboratory operations. Laboratory QA ensures that analytical methods generate data that are technically sound, statistically valid, and that can be documented. QC procedures are the tools employed to measure the degree to which these QA objectives are met.

7.4.3 Data Reduction, Verification, Validation, and Reporting

Analytical data generated by the activities described in this closure plan will be verified and validated. Data reduction is the conversion of raw data to reportable units; transfer of data between recording media; and computation of summary statistics, standard errors, confidence intervals, and statistical tests.

7.4.4 Data Reporting Requirements

Analytical results will include all pertinent information about the condition and appearance of the sample-as-received. Analytical reports will include:

A summary of analytical results for each sample;

Results from QC samples such as blanks, spikes, and calibrations;

Reference to standard methods or a detailed description of analytical procedures; and

Raw data printouts for comparison with summaries.

The laboratory will describe off-normal sample preparations that occur during the analysis in sufficient detail so that the data user can understand how the sample was analyzed.

8.0 WASTE MANAGEMENT

All waste generated during closure will be controlled, handled, characterized, and disposed of in accordance with Permit Section 9.4.5, Permit Attachment C (*Waste Analysis Plan*), and Facility waste management procedures. Closure activities may generate different types of waste materials, which are listed with potential disposal options in Table G.10-3 of this closure plan. Subsequent disposition options for the decontaminated structures and equipment include reuse, recycling, or disposal.

Portable berms or other devices, if necessary, will be used to collect excess wash water and provide containment during the decontamination activities to prevent releases. The excess wash water will be collected, transferred to containers, sampled, and analyzed for the hazardous constituents listed in Table G.10-4. The results of this analysis will determine if the excess wash water should be managed as hazardous or non-hazardous wastewater. Reusable protective clothing, tools, and equipment used during decontamination will be cleaned with a wash water solution. Disposable equipment and other small equipment that cannot be decontaminated will be containerized and managed as waste.

9.0 CLOSURE CERTIFICATION REPORT

Upon completion of the closure activities at the TWF, a closure certification report will be prepared and submitted to the Department. The report will document that the unit has been closed in compliance with the specifications in this closure plan and will contain the following:

- A copy of the certification described in Part 9 of this Permit.
- Any significant variance from the approved activities and the reason for the variance.
- A summary of all sampling results, showing:
- Sample identification
- Sampling location
- Datum reported
- Detection limit for each datum
- A measure of analytical precision (e.g., uncertainty, range, variance)
- Identification of analytical procedure
- Identification of analytical laboratory.
- A QA/QC statement on analytical data validation and decontamination verification.
- The location of the file of supporting documentation, including:
- Field logbooks
- Laboratory sample analysis reports
- QA/QC documentation
- Chain-of-custody forms.
- Storage or disposal location of regulated hazardous/mixed waste resulting from closure activities.
- A certification of accuracy of the report.

10.0 DEPARTMENT CLOSURE ASSESSMENT

Upon submittal of the closure certification report described in Section 9.0 of this closure plan, the Facility will arrange an on-site closure review with representatives of the Department to assess the completion of the closure activities of the permitted unit's closure activities. The Facility may also arrange, at reasonable times, for other on-site reviews before, during, or after the closure period upon request by Department representatives.

11.0 REFERENCES

DOE, 1995. "DOE Methods for Evaluating Environmental and Waste Management Samples," DOE/EM-0089T, Rev. 2. Prepared for the U.S. Department of Energy by Pacific Northwest Laboratory, Richland, Washington.

EPA, 1986 and all approved updates. "Test Methods for Evaluating Solid Waste, Physical/Chemical Methods," EPA-*SW-846*, U.S. Environmental Protection Agency, Office of Solid Waste and Emergency Response, U.S. Government Printing Office, Washington, D.C.

EPA, 2002. "RCRA Waste Sampling Draft Technical Guidance Planning, Implementation, and Assessment," EPA530-D-02-002, August 2002, Office of Solid Waste, U.S. Environmental Protection Agency, Washington, D.C.

LANL, 1999. "Screening Level Ecological Risk Assessment Methods," LA-UR-99-1406, Los Alamos National Laboratory, Los Alamos, New Mexico.

NIOSH, 1994. The National Institute for Occupational Health and Safety (NIOSH) *Manual of Analytical Methods*, Method 9100, 4th ed. Issue 1. 1994.

NMED, 2006. "Technical Background Document for Development of Soil Screening Levels," Rev. 4.0, June 2006, New Mexico Environment Department, Santa Fe, New Mexico.

Table 1
Technical Area 63 TWF Storage Unit Capacities and Waste Categories

Structure	Estimated Maximum Waste[a] (gallons)	55-gallon Drum Equivalent	Estimated Inventory[b, c] (gallons)	Waste Category	Dimensions (feet^2)
TA-63-0149	11,367	206.7	302,500	TRU, MTRU	62’4” x 31’4”
TA-63-0150	11,367	206.7	302,500	TRU, MTRU	62’4” x 31’4”
TA-63-0151	11,367	206.7	302,500	TRU, MTRU	62’4” x 31’4”
TA-63-0152	11,367	206.7	302,500	TRU, MTRU	62’4” x 31’4”
TA-63-0153	11,367	206.7	302,500	TRU, MTRU	62’4” x 31’4”
TA-63-0154	11,367	206.7	302,500	TRU, MTRU	77’11” x 31’4”
Totals	68,200	1,240	1,815,000		

[a] Estimated maximum quantity of waste that can be stored at the unit at one time.

[b] Estimated lifetime inventory of waste stored/treated at the unit.

[c] Estimated waste inventories include future use.

Table 2
Closure Schedule for the TA-63 TWF

Closure Activity	Schedule
Notify the Department of the initiation of closure.	Day 0
Remove all wastes including hazardous, mixed, and solid waste	No later than Day 90
Conduct records review	After initiating closure and before Structural Assessment
Conduct structural assessment	After removal of all wastes and before decontamination
Submit a request to modify the Closure Plan and the records review and structural assessment report	After conducting the records review and structural assessment and before decontamination
Complete all closure activities	No later than Day 180
Submit final Closure Report and Certification to the Department.	No later than Day 240

Note: The schedule above indicates calendar days in which the listed activities shall be completed from the day closure activities are initiated. Some activities may be conducted simultaneously.

Table 3
Potential Waste Materials, Waste Types, and Disposal Options

Potential Waste Materials	Waste Types	Disposal Options
Personal protective equipment (PPE)	Non-regulated solid waste	Subtitle D landfill
	Hazardous waste	The PPE will be treated to meet Land Disposal Restriction (LDR) treatment standards, if necessary, and disposed in a Subtitle C or D landfill, as appropriate.
	Low-level radioactive solid waste	Either an authorized on-site radioactive waste disposal area that is not undergoing closure under RCRA, or an authorized off-site radioactive waste disposal facility.
	Mixed waste	Waste will be treated to meet LDR treatment standards, if necessary, and disposed in a Subtitle C or D mixed waste landfill or the WIPP, as appropriate.
Decontamination wash water	Non-regulated liquid waste	Sanitary sewer
	Hazardous waste	Waste will be treated to meet LDR treatment standards, if necessary, and disposed in a Subtitle C or D landfill, as appropriate.
	Radioactive liquid waste	Radioactive Liquid Waste Treatment Facility (RLWTF)
	Mixed waste	Waste will be treated to meet LDR treatment standards, if necessary, and disposed in a Subtitle C or D mixed waste landfill or WIPP, as appropriate.
Verification water	Non-regulated liquid waste	Sanitary sewer
	Hazardous waste	Waste will be treated to meet LDR treatment standards, if necessary, and disposed in a Subtitle C or D landfill, as appropriate.
	Radioactive liquid waste	RLWTF
	Mixed waste	Waste will be treated to meet LDR treatment standards, if necessary, and disposed in a Subtitle C or D mixed waste landfill or WIPP, as appropriate.
Metal	Non-regulated solid waste	Subtitle D landfill or recycled
	Hazardous waste	Waste will be treated to meet LDR treatment standards, if necessary, and disposed in a Subtitle C or D landfill, as appropriate.
	Low-level radioactive solid waste	Either an authorized on-site radioactive waste disposal area that is not undergoing closure under RCRA, or an authorized off-site radioactive waste disposal facility.
	Mixed waste	Waste will be treated to meet LDR treatment standards, if necessary, and disposed in a Subtitle C or D mixed waste landfill, or WIPP, as appropriate.
Discarded waste	Non-regulated solid waste	Subtitle D landfill

Potential Waste Materials	Waste Types	Disposal Options
management equipment	Hazardous waste	Waste will be treated to meet LDR treatment standards, if necessary, and disposed in a Subtitle C or D landfill, as appropriate.
	Low-level radioactive solid waste	Either an authorized on-site radioactive waste disposal area that is not undergoing closure under RCRA, or an authorized off-site radioactive waste disposal facility
	Mixed waste	Waste will be treated to meet LDR treatment standards, if necessary, and disposed in a Subtitle C or D mixed waste landfill or WIPP, as appropriate.
Sampling equipment	Non-regulated solid waste	Subtitle D landfill
	Hazardous waste	Waste will be treated to meet LDR treatment standards, if necessary, and disposed in a Subtitle C or D landfill, as appropriate.
	Low-level radioactive solid waste	Either an authorized on-site radioactive waste disposal area that is not undergoing closure under RCRA , or an authorized off-site radioactive waste disposal facility.
	Mixed waste	Waste will be treated to meet LDR treatment standards, if necessary, and disposed in a Subtitle C or D mixed waste landfill or WIPP, as appropriate.
Storage Structures	Non-regulated solid waste	Subtitle D landfill
	Hazardous waste	Waste will be treated to meet LDR treatment standards, if necessary, and disposed in a Subtitle C or D landfill, as appropriate.
	Low-level radioactive solid waste	Either an authorized on-site radioactive waste disposal area that is not undergoing closure under RCRA, or an authorized off-site radioactive waste disposal facility.
	Mixed waste	Waste will be treated to meet LDR treatment standards, if necessary, and disposed in a Subtitle C or D mixed waste landfill or WIPP, as appropriate.
Concrete Pad	Non-regulated solid waste	Subtitle D landfill or potentially, re-use/recycle
	Hazardous waste	Waste will be treated to meet LDR treatment standards, if necessary, and disposed in a Subtitle C or D landfill, as appropriate.
	Low-level radioactive solid waste	Either an authorized on-site radioactive waste disposal area that is not undergoing closure under RCRA, or an authorized off-site radioactive waste disposal facility.
	Mixed waste	Waste will be treated to meet LDR treatment standards, if necessary, and disposed in a Subtitle C or D mixed waste landfill or WIPP, as appropriate.

Table 4
Hazardous Waste Constituents of Concern at the TWF[a]

Category	EPA Hazardous Waste Numbers	Specific Constituents
Toxic Contaminants	D004	Arsenic
	D005	Barium hydroxide
	D006	Cadmium
	D007	Chromium
	D008	Lead
	D009	Mercury
	D010	Selenium
	D011	Silver
	D018	Benzene
	D019	Carbon tetrachloride
	D021	Chlorobenzene
	D022	Chloroform
	D026	Cresol
	D027	1,4-Dichlorobenzene
	D028	1,2-Dichloroethane
	D029	1,1-Dichloroethylene
	D030	2,4-Dinitrotoluene
	D032	Hexachlorobenzene
	D033	Hexachlorobutadiene
	D034	Hexachloroethane
	D035	Methyl ethyl ketone
	D036	Nitrobenzene
	D037	Pentachlorophenol
	D038	Pyridine
	D039	Tetrachloroethylene
	D040	Trichloroethylene
	D041	2,4,5-Trichlorophenol
	D042	2,4,6-Trichlorophenol
	D043	Vinyl chloride
Volatile Organic Compounds	F001	Spent halogenated solvents, trichloroethylene
	F002	Spent halogenated solvents
	F003	Spent non-halogenated solvents, xylene, acetone
	F004	Spent non-halogenated solvents
	F005	Spent non-halogenated solvents
Toxic listed waste	U080	Methylene chloride

[a] This will be modified as needed, based on the unit operating record.
EPA = U.S. Environmental Protection Agency

Table 5
Summary of Proposed Analytical Methods

Analyte	EPA SW-846 Analytical Method [a]	Test Methods/ Instrumentation	Target Detection Limit [b]	Rationale
Metal Analysis				
Antimony	6010, 7010	ICP-AES, GFAA	20 ug/L	Determine the metal concentration in the samples.
Arsenic	6010, 7010, 7061A	ICP-AES, GFAA, CVAA	10 ug/L	
Barium	6010, 7010	ICP-AES,GFAA	200 ug/L	
Beryllium	6010, 7010	ICP-AES, GFAA	0.2 ug/L	
Cadmium	6010, 7010	ICP-AES, GFAA	2 ug/L	
Chromium	6010, 7010	ICP-AES, GFAA	10 ug/L	
Cobalt	6010, 7010	ICP-AES, GFAA	5 ug/L	
Copper	6010, 7010	ICP-AES, GFAA	5 ug/L	
Lead	6010, 7010	ICP-AES, GFAA	5 ug/L	
Mercury	6010, 7470A, 7471B	ICP-AES, CVAA	0.2 ug/L	
Selenium	6010, 7010, 7741A	ICP-AES, GFAA, CVAA	5 ug/L	
Silver	6010, 7010	ICP-AES, GFAA	10 ug/L	
Thallium	6010, 7010	ICP-AES, GFAA	30 ug/L	
Vanadium	6010, 7010	ICP-AES, GFAA	5 ug/L	
Zinc	6010, 7010	ICP-AES, GFAA	1 ug/L	
Organic Analysis				
Target compound list VOCs plus ten tentatively identified compounds (TIC)	8260B	GC/MS	10 mg/L	Determine the VOCs concentration in the samples.
Target compound list SVOCs plus 20 TICs	8270D, 8275	GC/MS	10 mg/L	Determine the SVOCs concentration in the samples.
Other Parameters				
Cyanide	9010, 9012	Colorimetric	20 ug/L	Determine cyanide concentration

[a] U.S. Environmental Protection Agency (EPA), 1986 and all approved updates, "Test Methods for Evaluating Solid Waste, Physical/Chemical Methods," SW-846.

[b] Detection limits listed for metals are for clean water. Detection limits for organics are expressed as practical quantitative limits. Actual detection limits may be higher depending on sample composition and matrix type.

CVAA = Cold-vapor atomic absorption spectroscopy
FLAA = Flame atomic absorption spectroscopy
GC/MS = Gas chromatography/mass spectrometry
GFAA = Graphite furnace atomic absorption spectroscopy

ICP-AES = Inductively coupled plasma-atomic emission spectrometry
mg/L = milligrams per liter
SVOC = semi volatile organic compounds
ug/L = micrograms per liter.
VOC = volatile organic compounds

Table 6
Recommended Sample Containers[a], Preservation Techniques, and Holding Times[b]

Analyte Class and Sample Type	Container Type and Materials	Preservation	Holding Time
Metals			
TCLP Metals: Arsenic, Barium, Cadmium, Chromium, Lead, Selenium, Silver	Aqueous Media: 500-mL Wide-Mouth-Polyethylene or Glass with Teflon Liner	Aqueous Media: HNO_3 to pH <2 Cool to 4°C	180 Days
	Solid Media: 125-mL Glass	Solid Media: Cool to 4°C	
TCLP/Total Mercury	Aqueous Media: 500-mL Wide-Mouth-Polyethylene or Glass with Teflon Liner	Aqueous Media: HNO_3 to pH <2 Cool to 4 °C	28 Days
	Solid Media: 125-mL Glass	Solid Media: Cool to 4°C	
Volatile Organic Compounds			
Target Compound Volatile Organic Compounds	Aqueous Media: Two 40-mL Amber Glass Vials with Teflon-Lined Septa	Aqueous Media: HCl to pH<2 Cool to 4 °C	14 days
	Solid Media: 125-mL Glass or Two 40-mL Amber Glass Vials with Teflon-Lined Septa	Solid Media: Cool to 4°C Add 5 mL Methanol or Other Water Miscible Organic Solvent to 40-mL Glass Vials	
Semi-Volatile Organic Compounds			
Target Compound Semi-volatile Organic Compounds	Aqueous Media: Four 1-L Amber Glass with Teflon-Lined Lid	Aqueous Media: Cool to 4 °C	Seven days from field collection to preparative extraction. 40 days from preparative extraction to determinative analysis.
	Solid Media: 250-mL Glass	Solid Media: Cool to 4°C	

[a] Smaller sample containers may be required due to health and safety concerns associated with potential radiation exposure, transportation requirements, and waste management considerations.
[b] Information obtained from "Test Methods for Evaluating Solid Waste, Physical/Chemical Methods," SW-846, U.S. Environmental Protection Agency, 1986 and all approved updates.

°C = degrees Celsius
HNO_3 = nitric acid
HCl = hydrochloric acid
L = Liter
mL = milliliter
TCLP = Toxicity Characteristic Leaching Procedure

Table G.10-7
Recommended Quality Control Sample Types, Applicable Analyses, Frequency, and Acceptance Criteria

QC Sample Type	Applicable Analysis [a]	Frequency	Acceptance Criteria
Trip Blank	VOC	One set per shipping cooler containing samples to be analyzed for VOCs	Not Applicable
Field Blank	VOC/SVOC, metals	One sample daily per analysis	Not Applicable
Field Duplicate	Chemical	One for each sampling sequence	Relative percent difference less than or equal to 20 percent
Equipment Rinsate Blank[b]	VOC/SVOC, metals	One sample daily	Not Applicable

[a] For VOC and SVOC analysis, if blank shows detectable levels of any common laboratory contaminant (e.g., methylene chloride, acetone, 2-butanone, toluene, and/or any phthalate ester), sample must exhibit that contaminant at a level 10 times the quantitation limit to be considered detectable. For all other contaminants, sample must exhibit the contaminant at a level 5 times the quantitation level to be considered detectable.

[b] Collected only if reusable sampling equipment used.

QC = quality control
VOC = volatile organic compound
SVOC = semi-volatile organic compound

Table 8
List of Permitted Unit Equipment

Equipment	Decontamination	Disposal[a]
Storage structure and associated equipment	X	
Any storage transportainers	X	
Equipment and spill kit cabinets	X	
Container pallets	X	X
Communication equipment	X	X
Access barriers and chains	X	X

[a] Disposal of waste items may include recycle or re-use as appropriate.

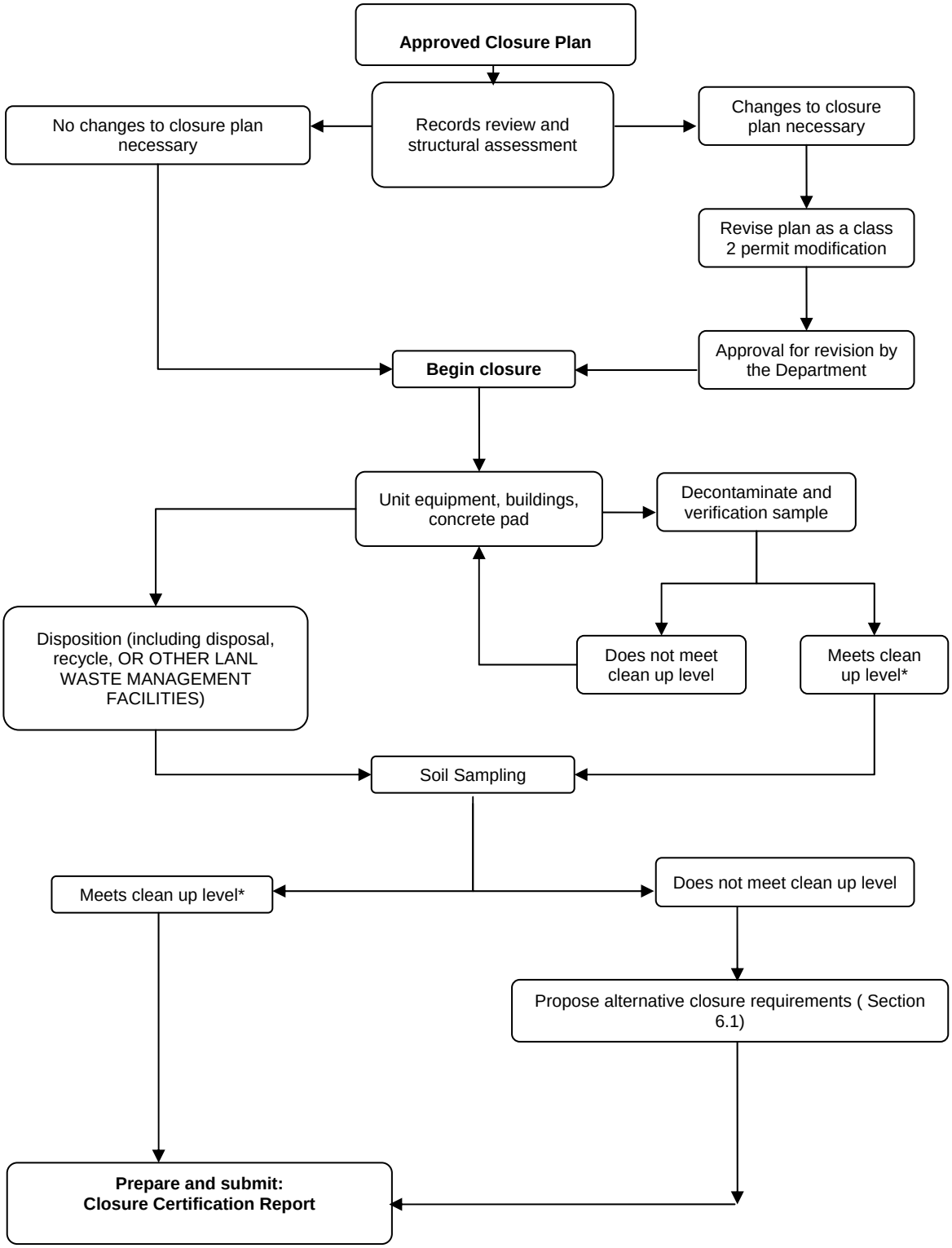

*Includes non-detect and comparison to baseline/background/screening levels.

Figure F-1 Flowchart of Closure Progression for TA-63 TWF Permitted Unit

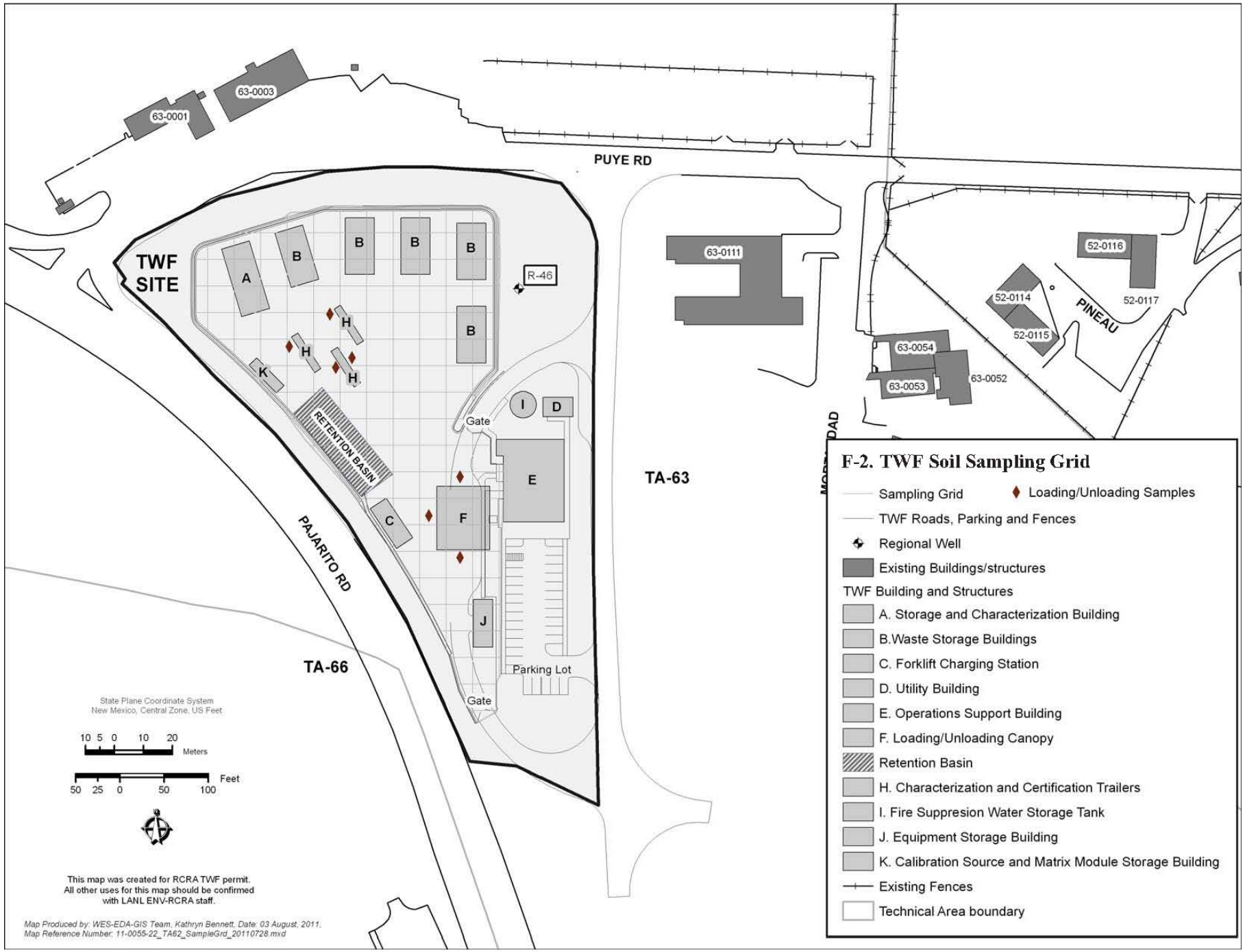
F-2. TWF Soil Sampling Grid
Sampling Grid
Loading/Unloading Samples
TWF Roads, Parking and Fences
Regional Well
Existing Buildings/structures
TWF Building and Structures
A. Storage and Characterization Building
B.Waste Storage Buildings
C. Forklift Charging Station
D. Utility Building
E. Operations Support Building
F. Loading/Unloading Canopy
Retention Basin
H. Characterization and Certification Trailers
I. Fire Suppresion Water Storage Tank
J. Equipment Storage Building
K. Calibration Source and Matrix Module Storage Building
Existing Fences
Technical Area boundary
TWF SITE
PUYE RD
PAJARITO RD
PINEAU
TA-63
TA-66
63-0001
63-0003
63-0111
52-0116
52-0114
52-0117
52-0115
63-0054
63-0053
63-0052
R-46
RETENTION BASIN
Gate
Parking Lot
State Plane Coordinate System
New Mexico, Central Zone, US Feet
Meters
Feet
This map was created for RCRA TWF permit.
All other uses for this map should be confirmed
with LANL ENV-RCRA staff.
Map Produced by: WES-EDA-GIS Team, Kathryn Bennett, Date: 03 August, 2011.
Map Reference Number: 11-0055-22_TA62_SampleGrd_20110728.mxd

Attachment G

Proposed Revisions to the LANL Hazardous Waste Facility Permit

(1) the Part A Application dated June 2009;

(2) the General Part B Permit Application dated August 2003;

(3) the TA-3-29 CMR Part B Application dated September 1999;

(4) the TA-16 Part B Permit Application dated June 2003;

(5) the TA-50 Part B Permit Application dated August 2002;

(6) the TA-54 Part B Permit Application dated June 2003; and

(7) the TA-55 Part B Permit Application dated September 2003.

(8) the TA-63 Permit Modification Request dated July 2011

Any inaccuracies found in the Application may be grounds for the termination, revocation and re-issuance, or modification of the Permit in accordance with 40 CFR §§ 270.41 through 270.43, which are incorporated herein by reference, and for enforcement action.

The Permittees shall inform the Department of any deviation from, or changes in, the information contained in the Application that would affect the Permittees' ability to comply with this Permit. Upon knowledge of such deviations, the Permittees shall, within 30 days, provide this information in writing to the Department in accordance with Permit Sections 1.9.14 and 1.9.15 and 40 CFR §§ 270.30(l)(11) and 270.43(a)(2), which are incorporated herein by reference.

1.6 PERMIT ACTIONS

1.6.1 Duration of Permit

This Permit shall be effective for a fixed term of ten years from its effective date. The effective date of this Permit shall be 30 days after notice of the Department's decision has been served on the Permittees or such later time as the Department may specify (*see* 40 CFR § 270.50(a)).

1.6.2 Permit Modification

This Permit may be modified for both routine and significant changes as specified in 40 CFR §§ 270.41 through 270.43, and any modification shall conform to the requirements specified in these regulations. The filing of a permit modification request by the Permittees, or the notification by the Permittees of planned changes or anticipated noncompliance, does not stay the applicability or enforceability of any permit condition (*see* 40 CFR § 270.30(f)).

3.13 TA-55 CONTAINER STORAGE REQUIREMENTS

3.13.1 General Operating Conditions

The Permittees shall ensure that storage of hazardous or mixed waste in containers at TA-55 occurs only in the permitted units B45, B40, B05, K13, the vault located at TA-55-4, TA-55-185, and the outdoor container storage pad located northwest of TA-55-4, and as identified in Attachment A (*Technical Area Unit Descriptions*) and Attachment J (*Hazardous Waste Management Units*).

3.14 TA-63 CONTAINER STORAGE REQUIREMENTS

1. General Operating Conditions

The Permittees shall ensure that storage of hazardous waste in containers at the TWF occurs only on the permitted unit pad at TA-63, and as identified in Attachment A (*Technical Area Unit Descriptions)* and Attachment J (*Hazardous Waste Management Units*).

Transuranic Waste Facility

(1) The Permittees shall ensure that at the TWF, all containers storing hazardous waste with free liquids are stored on secondary containment pallets., except inside the following structures: Trailers 155, 156, and 157.

ATTACHMENT A

TECHNICAL AREA (TA) - UNIT DESCRIPTIONS

TA-55 is patrolled by security personnel during both operational and nonoperational hours to ensure that the gates are locked and that unauthorized entry has not occurred. The entire length of both security fences is also inspected several times each day by on-site security personnel. The locations of the security fences, entry gates, and entry stations are shown on Figure 10 in Attachment N (*Figures)*.

In addition to the fence and entry gates, cliffs and canyons surrounding TA-55 provide natural barriers to discourage unauthorized entry.

Warning signs are posted on the perimeter fences at approximately 40 to 110-ft intervals and can be seen from any approach to TA-55. Warning signs are also posted at each access to the waste management units in sufficient numbers to be seen from any approach. The legends on the signs are bilingual (*i.e.*, English and Spanish) and indicate "No Trespassing by Order of the United States Department of Energy." The signs are legible from a distance of 25 ft.

A.5.11 Emergency Equipment

Buildings at TA-55 are equipped with multiple audible and visual safety-alarm systems to alert personnel in the event of an emergency and to evacuate the area. These alarm systems are located both inside and outside buildings at TA-55 and are monitored and controlled by the facility monitor and control system (FMCS). The FMCS is in operation 24 hours a day and is located in the Operations Center at TA-55-4 with access through TA-55-3. Specific FMCS alarm systems at TA-55 are discussed below.

A TA-55 computer system monitors the smoke and heat sensors, fire-alarm pull boxes, and drop box push-button alarms located throughout TA-55. Fire-alarm pull boxes and/or drop box push-button alarms are located in the vicinity of the waste management units addressed in this permit application. Fire-alarm pull boxes may be used by personnel to activate a local fire alarm when a fire or other emergency is discovered. Fire-alarm pull boxes are located in TA-55-4, Room 401, and throughout the basement in the vicinity of the container storage management units. The equipment includes portable eyewash stations and safety showers. Eyewash stations and safety showers are located in Room 401 and throughout the basement of TA-55-4. Eyewash stations are also located on the Container Storage Pad and outside on the south side of TA-55-4 near TA-55-185. Safety showers are readily available in the following locations: TA-55-4, Room 401; in the basement of TA-55-4; on the Container Storage Pad; and outside on the south side of TA-55-4. TA-55-185 is equipped with a portable safety shower prior to wastes being managed there. Material Safety Data Sheets (MSDS) provide useful exposure information and are available in Room 401 and in the basement of TA-55-4. The MSDS will also be located in TA-55-185 prior to wastes being managed there.

A.6 TA-63 TWF UNIT

The following section generally describes the proposed TWF unit with detailed descriptions of the unit's structures in the subsections. The TWF will consist of one waste management unit that will provide storage in containers for hazardous wastes, including the hazardous component of

mixed TRU and, potentially, mixed low-level waste streams. The TWF may also manage hazardous-only waste streams generated on site.

The TWF will be located at TA-63 on a mesa between a branch of Mortandad Canyon on the north and Pajarito Canyon on the south in the north central portion of LANL. It will be at the juncture of Pajarito Road and Puye Road, within the triangle formed by Building 63-111 to the east, Puye Road to the north, and Pajarito Road to the southwest. The closest facilities are shops immediately north of Puye Road, offices including Building 63-111, and records storage buildings immediately east of the TWF location, and buildings and structures on Pecos Drive further north of the TWF. During the future construction of the Nuclear Laboratory Facility/Chemistry and Metallurgy Research Replacement Project at TA-55, that activity will require a concrete plant and staging area that will be located south-east of the TWF.

One purpose of the TWF is safe, indoor storage of TRU waste newly generated by LANL operations. The second primary purpose is waste containers stored at the TWF will be subject to characterization including review of generator documentation (acceptable knowledge), headspace gas sampling (to determine the potential need for segregation of incompatible, ignitable, or reactive wastes), and non-intrusive radioassay. The overall process of waste characterization at LANL is described in Attachment C, *Waste Analysis Plan*, of the Permit.

Waste will be contact handled (CH) TRU waste; no remote-handled TRU waste will be stored at the TWF. Some TRU waste containers may be determined through final waste characterization not to meet the WIPP requirements for TRU waste. Depending on the presence of hazardous constituents, these waste containers will be reclassified to either low-level radioactive waste or mixed low-level waste and stored at the TWF until they are dispositioned appropriately.

Waste shipments will be made from the LANL waste generating facilities to the TWF for storage and then to the RCRA permitted Radioactive Assay and Nondestructive Testing (RANT) Facility at TA-54-38 West. The RANT facility is used to load the TRU waste containers into TRUPACTs (steel shipment containers) required for off-site shipment to the WIPP. Waste shipments may also occur from TWF to the RCRA permitted TA-50-69 Waste Characterization, Reduction, and Repackaging Facility (WCRRF) if repackaging of the containers is necessary.

The TWF will be approximately 28,100-sf (square feet). The layout of the facility is depicted in Figure 2-5 with the location of areas where storage will occur highlighted. The main structure for the unit will be the concrete pad providing a physical base and operational boundary for six waste storage buildings, several waste characterization trailers, outside storage of waste containers too large for the buildings, and the loading/unloading canopy. The pad will be surrounded by a security fence that will define the waste storage portions of the unit. One of the storage buildings will be used for the storage of large waste containers (e.g., SLB2s, SWBs) and for head space gas sampling and analysis.

To provide containment for the unit, a retention basin is designed to capture and distribute storm water at the TWF, and will also retain fire suppression water in the event of a fire. An automated water sampler will collect and preserve grab samples as storm water flows into the basin. Water will be released via a manual valve providing control of the flow rate from the basin. Should a fire occur, water collected will be analyzed for contaminants prior to discharge.

The unit will also include a small storage building for calibration sources used for waste characterization activities, a covered forklift charging station, and an equipment storage shed. Outside the fence, other site structures include an operations support building and a fire water storage tank and associated utility building.

A.6.1 Concrete Pad

The TWF concrete pad will be of reinforced concrete construction, on grade to provide support for the site structures and vehicle movement. The concrete pad will also provide a low combustible-loading between the buildings and for the site. The pad will be laid on a graded soil and gravel base course and be nominally 8 inches thick. The existing ground slopes from the northwest to the southeast. There is a significant grade difference from the northwest corner to the southwest corner of the site. After the site has been graded, portions will be lower in elevation than Pajarito Road or Puye Road. Given the elevation difference on the site, retaining walls are used along the northwest portion of the site. The pad will be sloped at approximately 2% to provide for storm water and fire suppression water drainage.

The perimeter of the pad will have a 24" gutter and 6" high curb to provide run-off control. A valley gutter isolates the northern portion of the pad. Storm water and potentially contaminated firewater run-off (in the event of a fire in the storage buildings) from the northern portion of the pad flows to the valley gutter then will be channeled to the retention basin, thus, providing containment for the site. This is a feature that negates the need for berms, dikes, or sumps around each storage building. The southern portion of the unit (where waste is not stored) slopes southeast providing drainage off the pad toward the parking lot.

A.6.2 Storage Buildings

The TWF will include six storage buildings, five of which will be functionally identical and are described in this section. These buildings will measure 33 x 64 ft or approximately 2112 square feet, and will be 15 ft high. The storage buildings provide safe covered storage, for LANL generated TRU waste containers through weather protection, physical security, and DOE design requirements for safety at nuclear facilities. Multiple buildings are being proposed to minimize the radioactive material content at individual storage buildings and to reduce the potential impact from accidents relative to a single larger building. Multiple smaller buildings will also reduce overall risk associated with events such as vehicle impact or fire. The storage building floor plan is presented in Figure 2-6. These five storage buildings will be designated 63-0149, 63-0150, 63-0151, 63-0152, and 63-0153.

Containers loaded onto pallets will be stored on a reinforced concrete floor. The building floor (i.e., mat slab) will be higher than the concrete pad to prevent run-on, and will be sloped towards a roll-up door at the building entrance for drainage in the event of a fire.

The concrete floors will be coated to provide a sealed surface and chemical resistance, although secondary containment pallets will be used to meet the containment requirements of the Permit for potential liquid containing waste in the storage buildings.

Each of the storage buildings will be a covered single-story structural steel frame. Each storage building is designed to exceed the snow load for roof design and the design wind force for open buildings and other structures, as described in ASCE 7*Minimum Design Loads for Buildings and Other Structures*. The steel frame is an ordinary moment frame with joists to attach roof panels and girts to attach wall panels. The walls of the facility will be rigid to provide protection from the elements and external forces. Gypsum board on light gauge metal studs with industrial coating will finish the interior walls. The roof is a high quality metal standing seam. Batt insulation in the ceiling and on the inside of the walls will reduce heat loss and gain inside the buildings. Electric heaters will heat the interior to prevent fire suppression systems and eyewash stations from freezing. Cooling will be provided by venting fans. In order to drain the building in the event of a fire, the floors will be constructed to provide a shallow slope (1/8 inch to 1 foot) from the back end of the building towards the front, and then out the roll-up door opening to the concrete pad outside the building.

A.6.3 Storage and Characterization Building

The sixth storage building is divided into a storage area, a room for the thermal equilibrium of containers to prepare for head space gas sampling, and additional support and analytical equipment rooms. The storage area in this building will be used for a variety of containers including SLB2's and SWB's. In order to accurately analyze headspace gas, the container temperature must be allowed to equilibrate to a minimum of 64 degrees Fahrenheit for 72 hours, as described in the Central Characterization Project procedure: CCP-TP-093, *CCP Sampling of TRU Waste Container, (CCP, 2010)*. Sampling equipment is available for obtaining headspace gas samples and flammable gas samples from waste containers. Gas chromatography and mass spectrometry on the flammable gas sample will occur in an adjacent room.

The floor plan of the building measures 80 x 33 ft or approximately 2640 square ft, and is 15 ft high. The building will otherwise be constructed to the same standards as the other storage buildings. The building will be numbered 63-0154.

A.6.4 Characterization Trailers

The TWF facility will include pads with utility hook-ups for the characterization trailers used to certify containers to DOE/WIPP-02-3122, *Transuranic Waste Acceptance Criteria (WAC) for the Waste Isolation Pilot Plant*, (WIPP, 2010). The non-destructive evaluation (NDE) and non-destructive assay (NDA) equipment will be provided for the TWF in mobile modified commercial trailers placed in the facility. These trailers are in use and functional at other DOE waste characterization sites. These trailers are currently providing this function for TRU waste management at the TA-54, Area G, Pad 10 permitted hazardous waste unit and will be moved to the TWF to continue this use. Radiographic assay equipment used for characterization is housed in these trailers as follows:

- Real-Time Radiography (RTR) unit. The assay equipment in the trailer is designed to provide X-ray examination of the contents of transuranic waste drums. This trailer is currently designated as TA-54-0497 in use at Area G.

- High-Efficiency Neutron Counter (HENC) unit. The assay equipment in the trailer is designed to provide a passive neutron and gamma measurement of 55-gallon transuranic waste drums. This trailer is currently designated as TA-54-0498 in use at Area G.
- SuperHENC unit. The assay equipment in the trailer is similar to the HENC but includes a high efficiency neutron counter and a gamma counter that are both designed to handle standard waste boxes (SWBs). This trailer is currently designated as TA-54-0457 in use at Area G.

The RTR is a self-contained, non-intrusive X-ray unit, physically housed in a mobile container 48 feet in length by 8 feet wide used to X-ray waste containers up to 85 gallons in volume. Radiography is a nondestructive qualitative and semi-quantitative technique that involves X-ray scanning of waste containers to identify and verify waste container contents. Radiography is used to examine the waste container to verify its physical form. This technique can detect prohibited items such as liquid wastes and gas cylinders, which are prohibited for WIPP disposal. Radiography examination must achieve the following to meet the WIPP criteria:

- Verify and document the physical form of each waste container.
- Identify any prohibited waste in the waste container.
- Confirm that the physical form of the waste matches its waste stream description (i.e., homogeneous solids, soil/gravel, or debris waste [including uncategorized metals]).

The HENC is a self-contained, non-intrusive, passive assay unit, physically housed in a mobile assay container 48 feet in length by 8 ½ feet wide by 12 ¾ feet high. The HENC is designed to assay 55-gallon (208 liter) drums containing fissionable radionuclides. The system simultaneously performs passive neutron counts and gamma spectrometry to detect gamma-emitting radionuclides for the purpose of determining quantitative concentrations of TRU constituents. The equipment and mobile container only require electrical power to operate. Approximately 10 to 13 drums a day can be processed through the HENC, with each drum taking approximately 45 minutes for examination. The HENC is a large rectangular-shaped neutron counter that is specifically designed to assay the container in a 4π counting geometry. The HENC system uses passive and add-a-source neutron analysis methods to assay the nuclide mass contained in 55-gal drums of TRU waste. Waste drums to be assayed are placed on a conveyor that feeds drums into the system.

The SuperHENC operates on the same principle as the HENC, within a similar tractor trailer. The process however, is applicable to assay of TRU radionuclides in waste packages such as SWBs and Standard Large Boxes (SLB2). Data from this process is used to assay the radioactive content of SWBs containing TRU waste, sorting SWBs based on the 100 nanocurie per gram (nCi/g) TRU limit, and confirming radioisotopes indentified via Acceptable Knowledge.

The trailers will be numbered 63-0155, 63-0156, and 63-0157 at TA-63.

A.6.5 Loading/Unloading Canopy

The canopy, designated Building 63-0145, will be used for shipping and receiving of TRU waste containers. The covered area of the canopy is approximately 48 ft by 60 ft and is large enough to conduct operations out of the weather. The roof will be pitched west to east and will not drain to

the concrete pad. Waste transportation trucks entering the controlled area of the TWF through the access gates on the east side will park beneath the canopy for both loading and unloading operations. A bump out is provided in the driveway to allow forklift access to both sides and rear of the truck. The canopy will support a photovoltaic array to provide a source of renewable energy to meet Leadership in Energy and Environmental Design (LEED) requirements.

A.6.6 Retention Basin

The storage buildings and characterization trailers are located within the northern portion of the site. The retention basin is located south of the storage buildings and characterization trailers along the western edge of the site. The retention basin is designed to collect water from this area in two types of events. Primarily, surface storm water or melt water run-off from the concrete pavement in this area is directed to the retention basin via the slope (nominally 2%) of the concrete pad. A valley gutter also helps to channel water from the east side of the concrete pad to the retention basin. Secondly, in the event of a fire at the unit, fire suppression water will potentially flow out of the storage buildings or from other unit structures to the concrete pad and then to the retention basin.

The designed volume capacity for the retention basin includes the potential for a combination of both events. This includes run-off from a projected 25 year frequency and 2 hour duration precipitation event (1.94 inches of precipitation resulting in approximately 85,900 gallons (11,500 cubic ft.) from 1.63 acres). For a fire suppression event, an estimate of suppression water needed is calculated from NFPA 13 factors (380 gpm for 30 min. of sprinkler demand and 500 gpm for 30 min. fire hose stream allowance), for a total of approximately 26,400 gallons (3,530 cubic ft.). Volume from both events results in a total capacity of approximately 112,300 gallons (approximately 15,000 cubic ft.). The designed total retention basin volume also includes 0.5 ft of freeboard, resulting in a total capacity of 137,450 gallons (18,375 cubic ft.). Final dimensions of the basin will be 125 ft by 42 ft by 3.5 ft deep.

The retention basin will be drained as needed via a manual release valve that is normally in the closed position. The retention basin will also be equipped with an Isco™ 6712 FR automated storm water sampling station or an equivalent sampler. In normal storm water events the manual drain valve will be opened and the collected storm water will be released through a pipeline at the calculated predevelopment flow rate (i.e., the rate of storm water runoff from the site prior to construction of the facility) after the opening of the valve. The released storm water will drain through the pipe line to a release site on the east side of the TWF and then to other stormwater retention structures developed for the aggregate area.

In the event of a fire at the TWF, the retention basin will serve the critical function of collecting the fire suppression water in the basin. The slope of the unit's concrete pad and the valley gutter serve to ensure that any water draining from the unit's storage buildings or the characterization trailers will be routed to the retention basin. This key design feature provides containment of possible contamination and a backup option for any emergency management activities. In such an event, collected water will remain in the basin until sampling and water-quality analysis can be performed to determine whether or not the water is contaminated. Once that is determined, the water will managed accordingly. In the event of such a fire or release, any further

decontamination of the retention basin will be subject to the provisions of Attachment D, *Contingency Plan*, of the Permit.

A.6.7 Other Project Structures

Other project structures are present at the TWF to provide support for the hazardous waste management activities at the unit. These are outside the boundary of the hazardous waste management unit or do not directly store or manage hazardous wastes.

The Operations Support Building provides offices and services for operations personnel and management. Personnel are housed in the separate building to ensure that radiological exposures are as low as reasonably achievable (ALARA) by increasing distance from the waste management activities. The Operations Support Building is approximately 75 ft by 80 ft. Operations and characterization personnel will be housed in this building, although it will not be occupied continuously. However, it will provide storage of waste container data and monitoring of key operational parameters and specific safety structure, system, and component (SSC) status. In addition, a public address system will be powered from this building to facilitate emergency response. The building will include offices, conference rooms, restrooms, change rooms, site security access, and circulation space for about 25 workers. The building will be outside the security control fence; windows provide visual observation of the control area. The building will use an ordinary steel moment frame in both directions, and include nonload bearing metal panel walls. The exterior finish will be metal sandwich insulating panels. The roof will be a low slope membrane-type with high solar reflectance and roof and overflow drains. The floor will be reinforced concrete slab on grade and finished concrete in some areas.

Access to the waste management site is via a gated driveway east of the concrete pad. Gates are normally closed and vehicle access to the controlled area within the unit fence line requires check-in at the Operations Support Building. Pedestrian access to the controlled area also requires check-in through the Operations Support Building. Parking for site workers and visitors is provided south of the Operations Support Building and outside the controlled area fence.

Located to the north of the Operations Support Building, on the project site but outside the controlled area fence, is a dedicated fire water supply tank and utility building. The utility building is adjacent to the water tank that supplies water for the fire suppression system. This building will house two fire water pumps and instrumentation needed to ensure operation of the fire suppression system. The back-up pump is diesel powered. Access into the fenced unit will not be required for filling the diesel pump fuel tank, a fuel truck parked on the roadway will serve this purpose.

Further to the north, across the access driveway is an existing groundwater monitoring well. The monitoring well is R-46, part of the LANL groundwater monitoring network. The TWF controlled area fence line is located to the west of the monitoring well. Space has been allocated to allow for routine and upset condition access to the monitoring well. Access to the TWF is not required for activities associated with the monitoring well.

A forklift charging station is located to the west of the canopy along the western edge of the site. This structure will be an open roofed shed with storage areas for the forklifts and charging equipment.

There will be an equipment storage shed on the west side of the unit. This shed will be a light warehouse of 1250 square feet and will be used to store items such as metal pallets, containers used to over-pack waste containers if necessary, and snow removal equipment. The building will be 25x50x15 high. The sides of the shed will be closed with a rollup (garage-type door) in addition to a personnel access/egress door. There will be no fire protection in this building.

The characterization process will require sealed radioactive sources for calibration of RTR and HENC sensors. A separate building designated the Characterization Source and Matrix Management (CSMM) Building will house sealed sources.

A.6.8 SECURITY AND ACCESS CONTROL

The DOE provides security for the area within LANL boundaries. Guard stations will control public access to this area of LANL from Pajarito Road east and west of TA-63. Therefore, only properly identified LANL and DOE employees authorized to enter the facility or individuals under their escort will have access to the TWF.

The unit security requirement will be met because the TWF will be within a security fenced area with controlled access gates. The security fence around the waste management portion of the TWF will be at least 8 feet (ft) high and be a chain link type fence with steel pipe fence posts. Fence tops will have at least three strands of barbed wire angled away from the protected area to prevent a person from scaling the fence. Two vehicle access gates will be integrated into the fence line. These gates, when opened, shall provide at least a 16 foot wide clearance to enable vehicle access. Gates will be locked when the facility is not operational.

Controlled entry to the unit will be provided by a system of access controls (badge readers and administrative controls will be required prior to entrance) to ensure that only authorized personnel are granted access. These access controls will also ensure that all facility personnel can be identified and located in an emergency.

The TWF will be patrolled by LANL security personnel during both operational and non-operational hours to ensure that the gates are locked and that unauthorized entry does not occur.

Warning signs stating "Danger – Unauthorized Personnel Keep Out," will be posted on the perimeter fences and gates. These will be able to be seen from any approach to the TWF in accordance with Permit Section 2.5.2, *Warning Signs*. The legends on the signs will be bilingual (i.e., English and Spanish) and will also indicate "No Trespassing by Order of the United States Department of Energy." The signs will be legible from a distance of 25 feet. Signs for any confined areas, if necessary, may be reduced in size, but will be legible to personnel who require access to these areas. TA-63 does not have a shared boundary with the Pueblos of San Ildefonso or Santa Clara and, therefore, the signs will not include warnings in Tewa dialects.

A.6.9 Required Equipment

The TWF will be equipped with safety-alarm systems to alert personnel in the event of an emergency and to evacuate the area. These alarm systems will be located both inside and outside the unit and will be monitored. The facility monitor/control system will be in operation 24 hours a day and will be located in the access control station at the TWF; the system will also be connected to the LANL CAS. Specific facility monitor/control system equipment to be located at the TWF is discussed below.

Emergency equipment will be located throughout the TWF and will include fire alarms, fire response systems, alarm systems, internal communications, spill kits, and decontamination equipment. Detailed information on the required emergency and safety equipment located at the TWF is provided below.

Fire-alarm pull boxes and/or drop box push-button alarms will be located pursuant to NFPA standards in the TWF where waste management activities will be conducted. Fire-alarm pull boxes may be used by personnel to activate a local fire alarm when a fire or other emergency is discovered. Once manually activated, an alarm will sound in the TWF access control station and at the LAFD through LANL's CAS. The TWF will also be equipped with automatic fire-suppression alarm systems. The fire-suppression alarms will be activated when water flow is detected in the sprinkler pipes of the fire-suppression system. Upon activation of the fire-alarm system, an alarm will sound and red lights will flash to alert personnel of emergency conditions. All fire-alarm pull boxes and automatic fire-suppression systems that will be located at the TWF will be connected to the LAFD through LANL's CAS.

In addition to the alarms described above, a public address (PA) system may also be used to announce emergency conditions or to initiate an evacuation at the TWF. The PA system will be audible throughout the TWF and will be activated by the access control station in the Operations Support Building.

Personnel working at the TWF will have the ability to communicate the location and nature of hazardous conditions using conventional telephones, or cellular telephones to call the access control station. This type of call will summon assistance from the Emergency Management and Response Office, local police and fire departments, and state emergency response teams, if necessary.

Fire control equipment will be readily available for the waste management unit. Portable fire extinguishers will be available and may be used by trained on-site personnel depending on the size of the fire and the fuel source. However, LANL policy encourages immediate evacuation of the area and notification of appropriate emergency personnel. Fire hydrants are located in accordance with NFPA standards on the west and east sides of the TWF pad and near the Operations Building. Water will be supplied to the fire hydrants by a municipal water system which will provide adequate volume and pressure (i.e., greater than 1,000 gal per minute and 90 pounds per square inch static pressure) to multiple water hoses in the event of a fire. The LAFD will supply all water hoses needed in the event of a fire at the TWF.

There will be spill kits available at the TWF in the storage areas to mitigate containable spills. These kits will typically contain sorbents, neutralizers, personal protective equipment (PPE), and other equipment essential for containment of spills. Trained personnel will use the spill kits only if they know what has been spilled and they are sure their actions will not put themselves or others at risk. In addition to the spill kits, cleanup equipment such as shovels, bags, drums, etc. will be available at the TWF. Overpack drums and sorbents will also be stored in an equipment storage shed on the west side of the TWF. Emergency personnel can also provide additional spill control equipment and assistance upon request depending on the size and severity of the spill.

Personnel decontamination equipment that will be available at the TWF will include safety showers and eye wash stations located inside each of the storage buildings. These will be situated at all the waste storage buildings in accordance with OSHA requirements. Additional decontamination equipment may be provided by emergency personnel. Material Safety Data Sheets MSDS (e.g., for cleaners, solvents, used on site) will be available at operations areas and will provide useful exposure information in accordance with OSHA requirements.

A.6.10 Control of Run-on/Run-off

Controlling run-on and run-off at the TWF locations where waste management operations will regularly occur is accomplished by the design of the buildings and the use of control structures with appropriate contouring of surface areas. Run-on of storm water into the storage buildings will not occur: walls enclose raised floors, and surface contouring slopes away from the building to prevents storm water from pooling against the foundations, doors, and loading areas. The internal floors of the buildings will be sloped to the front doors to prevent flooding by precipitation or storm water in addition to providing drainage to the outside.

The TWF site will maintain a nominally 2% slope to optimize drainage and the use of electric forklifts to handle waste containers. After the site has been graded, the site will be lower in elevation than Pajarito Road or Puye Road. A retention wall will maintain the differences in elevation between the roads and the site. The site will be surfaced in concrete and will include a retention basin for management of storm water and for the collection of fire suppression water until it is sampled and verified to be uncontaminated. Retention basin capacity includes the run-off from a 25 yr-2 hr precipitation event in addition to a fire event or a total capacity of approximately 137,450 gallons or 18,375 cubic feet of water.

Secondary containment will be provided where potential liquid-bearing containers are stored in the buildings to prevent run-off. Secondary containment systems (e.g. pallets) will be utilized, as needed, and will have sufficient capacity to contain at least 10 percent (%) of the volume of potential liquid-bearing containers or the volume of the largest container stored in the system, whichever is greater, pursuant to the requirements of 40 CFR §264.175(b)(3) and Permit Section 3.7, *Containment Systems*.

Waste spills or leaks will be managed inside the characterization trailers to prevent run-off. Waste staged under the canopy will be protected by the roof. Containers stored outside on the concrete pad will be protected from contact with precipitation in accordance with Permit Section 3.5.1 (5).

ATTACHMENT D

CONTINGENCY PLAN

TA-63 Transuranic Waste Facility

Emergency Equipment

FIRE CONTROL EQUIPMENT

ABC and/or BC rated fire extinguishers are available at TA-63-145, TA-63-149, TA-63-150, TA-63-151, TA-63-152, TA-63-153, TA-63-154, TA-63-155, TA-63-156, and TA-63-157

Description of General Capabilities:
These portable, manually operated fire extinguishers may be used by any qualified employee in the event of a small fire. For larger fires, security personnel and the Los Alamos Fire Department (LAFD) are alerted.

Flame or smoke detection equipment and fire alarm pull stations will be located within structures at TA-63-149, TA-63-150, TA-63-151, TA-63-152, TA-63-153, and TA-63-154.

Dry-pipe fire suppression systems are available at TA-63-149, TA-63-150, TA-63-151, TA-63-152, TA-63-153, and TA-63-154.

Fire alarm pull stations are available at TA-63-145, TA-63-149, TA-63-150, TA-63-151, TA-63-152, TA-63-153, TA-63-154, TA-63-155, TA-63-156, and TA-63-157.

Description of General Capabilities:
Fire alarms may be activated by any employee in the event of a fire to notify the LAFD and security personnel. Security personnel and LAFD are also notified upon activation of the flame or smoke detectors.

Two fire hydrants are located in TWF. These fire hydrants will supply water at an adequate volume and pressure to satisfy the requirements of 40 CFR 264.32(d)

SPILL CONTROL EQUIPMENT

Spill control stations and/or portable spill kits are located at TA-63-145, TA-63-149, TA-63-150, TA-63-151, TA-63-152, TA-63-153, TA-63-154, TA-63-155, TA-63-156, and TA-63-157 Each spill kit generally includes bags of absorbent and an inventory of tools and supplies.

COMMUNICATION EQUIPMENT

Telephones and the public address system are located inside the Operations Support Building.

Description of General Capabilities:

Telephones for internal and external communication are available for use by any employee. Employees can be notified of an emergency situation and appropriate response action through the public address system.

Fire alarm pull stations are located in the storage buildings, the receiving canopy, and at operations support building.

Description of General Capabilities:

Manually-operated fire alarms may be activated by any employee in the event of a fire to alert TWF site personnel, LANL Emergency Response Personnel, and the LAFD.

Fire and public address system alarms

Description of General Capabilities:

The fire and public address system are activated or used to provide a sound signal to alert personnel of fires or the need to clear the area.

DECONTAMINATION EQUIPMENT

Eyewash/emergency shower stations and MSDSs are available in the storage buildings and the Operation Support Building. MSDS information is maintained where appropriate for personnel accessibility and are used for chemicals that will be needed to support operations or emergency activities.

Description of General Capabilities:

Eyewashes and emergency showers may be used by personnel who receive a chemical splash to the eyes or body. Specific MSDSs should be reviewed prior to working with chemicals.

PERSONAL PROTECTIVE EQUIPMENT

Personnel at TWF will be required to use appropriate personal protective equipment (PPE) protect themselves from hazards found under normal conditions. This PPE may include gloves, steel toe shoes, and eye protection, additional PPE may be required during unusual hazardous situations. First aid kits and hearing protection will also be available.

Description of General Capabilities:

To prevent undue exposure of personnel to hazardous or mixed waste, personal protective equipment (PPE) appropriate for the waste containers being managed will be worn by all on-site personnel at the TWF (see section 2.5.6). First aid kits may be used by personnel who sustain minor injuries at the unit in the course of operations. Hearing protection may be used by operations personnel to mitigate noise impacts.

ATTACHMENT J

HAZARDOUS WASTE MANAGEMENT UNITS

Unit Identifier	Process Codes	Operating Capacity	General Information	Type of Unit
			Total square footage - 2,400	
TA-55-4 Outdoor Pad	S01	135,000 gal	Located outside and west of TA-54-4 Total square footage – 11,100	Outdoor (not associated with a regulated unit)
TA-63 Transuranic Waste Facility	S01	105,875 gal	Includes TA-63-145 Receiving Canopy, TA-63-149 through 153 Storage Buildings, TA-63-154 Storage and Characterization Building, TA-63-155 through 157 Characterization Trailers, and Outside Storage Pad	Outdoor (not associated with a regulated unit)

ATTACHMENT N

FIGURES

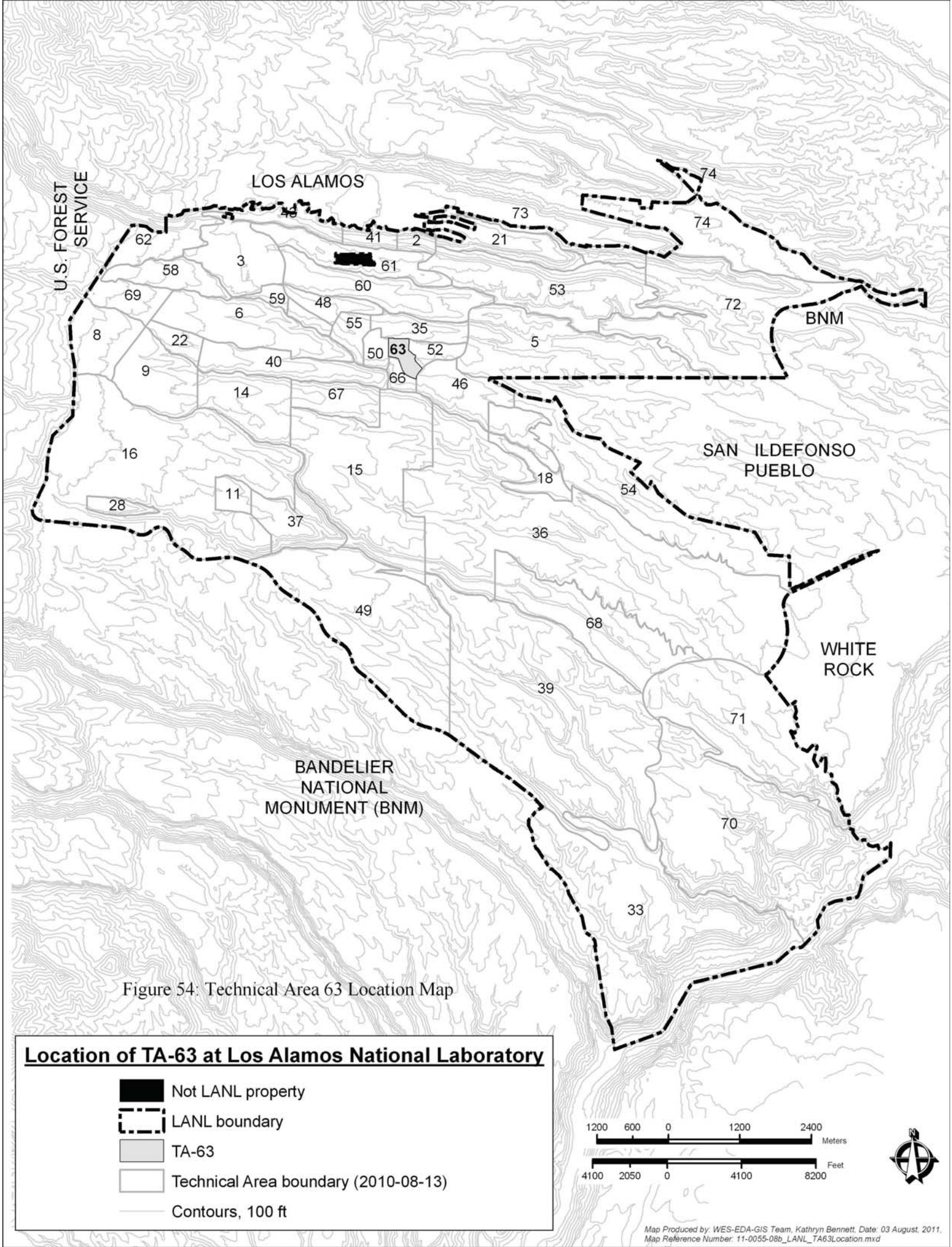

Figure 54: Technical Area 63 Location Map

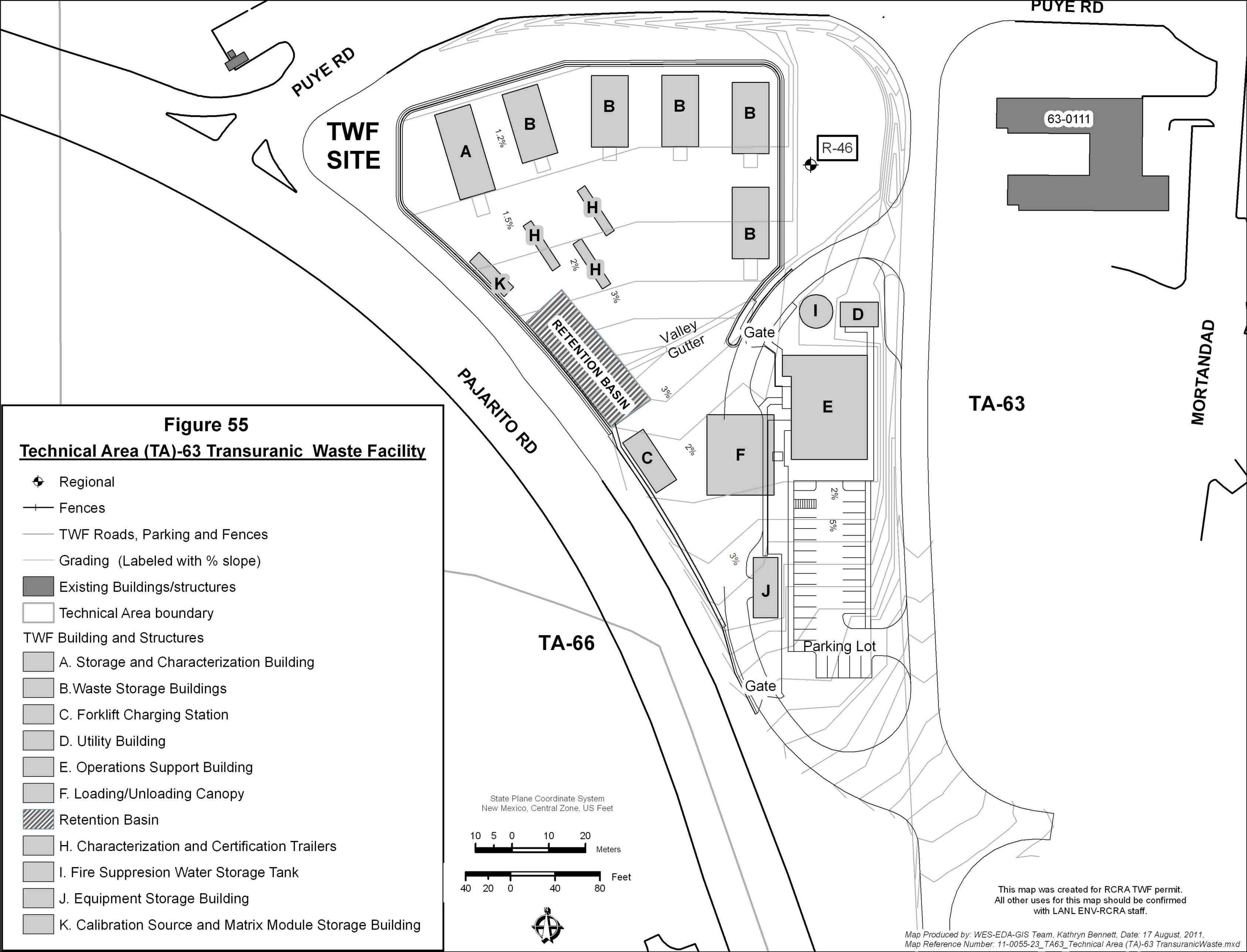

Figure 55

Technical Area (TA)-63 Transuranic Waste Facility

- Regional
- Fences
- TWF Roads, Parking and Fences
- Grading (Labeled with % slope)
- Existing Buildings/structures
- Technical Area boundary

TWF Building and Structures

- A. Storage and Characterization Building
- B.Waste Storage Buildings
- C. Forklift Charging Station
- D. Utility Building
- E. Operations Support Building
- F. Loading/Unloading Canopy
- Retention Basin
- H. Characterization and Certification Trailers
- I. Fire Suppresion Water Storage Tank
- J. Equipment Storage Building
- K. Calibration Source and Matrix Module Storage Building

Attachment H
Pre-submittal Public Information Meeting, August 10, 2011

Los Alamos National Laboratory
Permit Modification Request
TA-63 Transuranic Waste Facility
Hazardous Waste Container Storage Unit
Pre-submittal Public Information Meeting
5:30 pm – 7:30pm, August 10, 2011
Fuller Lodge, Los Alamos, New Mexico

Summary

Los Alamos National Laboratory hosted a pre-submittal meeting prior to the submittal of the Transuranic Waste Facility (TWF) permit modification request using the guidelines set out in 40 CFR §124.31 regarding expanded public participation for environmental permits. The purpose of the meeting was to describe the proposed facility and solicit public comments to be included in this permit modification request. The meeting included presentations on the TWF function and its relation to the LANL TRU waste program, the physical layout and safety factors for the unit, and the permit modification schedule and public input process. This attachment contains copies of the presentation power point slides for the meeting, the sign-in list, and comments collected. This meeting was rescheduled after a previously announced meeting on June 27, 2011 had to be cancelled due to the evacuation of Los Alamos during the Las Conchas Fire.

Transuranic Waste Facility Permit Modification Request

Public Information Meeting

LANL Hazardous Waste Facility Permit

Fuller Lodge, Los Alamos
Wednesday, August 10, 2011

LA-UR-11-04597

Meeting Procedures

Presenter: Bruce McAllister, Meeting Facilitator

Topics and Guidelines

- The meeting focus is on permit compliance activities.
- The purpose of this meeting is to share information and status.
- The meeting is not designed to include debate about LANL's programmatic mission.
- We will be collecting questions and comments on Permit Question Cards
- We will answer as many questions as time allows.
- Any unanswered questions and suggestions will be provided to the program managers for future reference.
- If you have suggestions to improve the meeting, please use the Meeting Comment Cards

Agenda

Time	Subject	Speaker
5:30 – 5:45	Posters Meet and Greet	
5:45 – 5:55	Meeting purpose	Bruce MacAllister
5:55 – 6:15	Purpose of the Transuranic Waste Facility (TWF)	Matthew Nuckols Program Director
6:15 – 6:35	Description of the TWF	Greg Juerling Project Manager
6:35 – 6:55	Permit Modification Request	Gian Bacigalupa RCRA Permitting
6:55 – 7:30	Question and Answer	Bruce MacAllister

General Meeting Procedures

- **Please write your questions on the cards so we can collect them.**
- **Please identify yourself before speaking.**
- **Please keep your questions short and remember that others may be waiting to ask questions.**
- **Please honor the process by keeping questions and comments civil and by using appropriate language.**
- **Please yield the floor if requested by the facilitator**
- **Please help the participants and facilitator keep to the agenda and timeframes**

New Mexico Environment Department (NMED) Approves Permits under the Resource Conservation and Recovery Act (RCRA)

- **Los Alamos National Laboratory (LANL) will request approval of a permit modification to the current Hazardous Waste Facility Permit for the proposed Transuranic Waste Facility (TWF).**
- **The permit modification request will be reviewed by the NMED for approval of construction and incorporation into the Permit.**
- **The permit modification request follows regulatory procedures, including this meeting.**
- **Seeking public comment is an important aspect of the regulatory process for review and approval of the new unit.**
- **Your written questions and comments will be provided to NMED when LANL submits the permit modification request .**

End of Meeting Section

- **Does anyone have questions or comments related to meeting procedures?**

Transuranic Waste Facility Project

Presenter: Matthew Nuckols, Program Director Capital Projects

Basis for Permit Modification

- **Container storage unit to replace existing waste management units when Material Disposal Area G at TA-54 is closed in compliance with the 2005 NMED Compliance Order on Consent.**
- **Waste management capability is required to continue to process newly generated (future) TRU waste from LANL to the Waste Isolation Pilot Plant near Carlsbad, NM.**

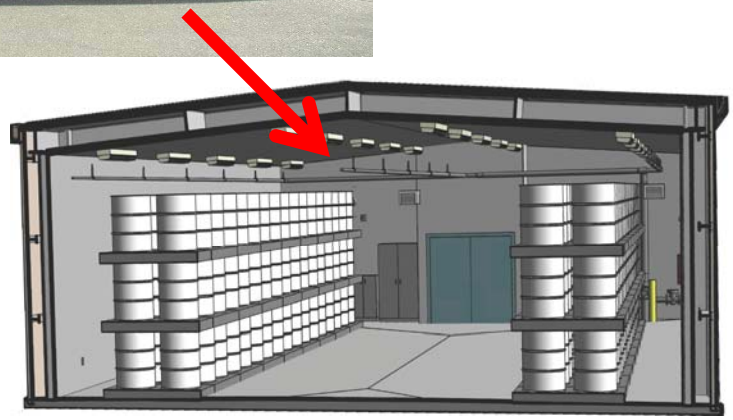

TA-54 AREA G – Current Transuranic Waste Storage

Transuranic Waste in TA-54 Dome

Area G Comparison

TWF Site Superimposed on Area G

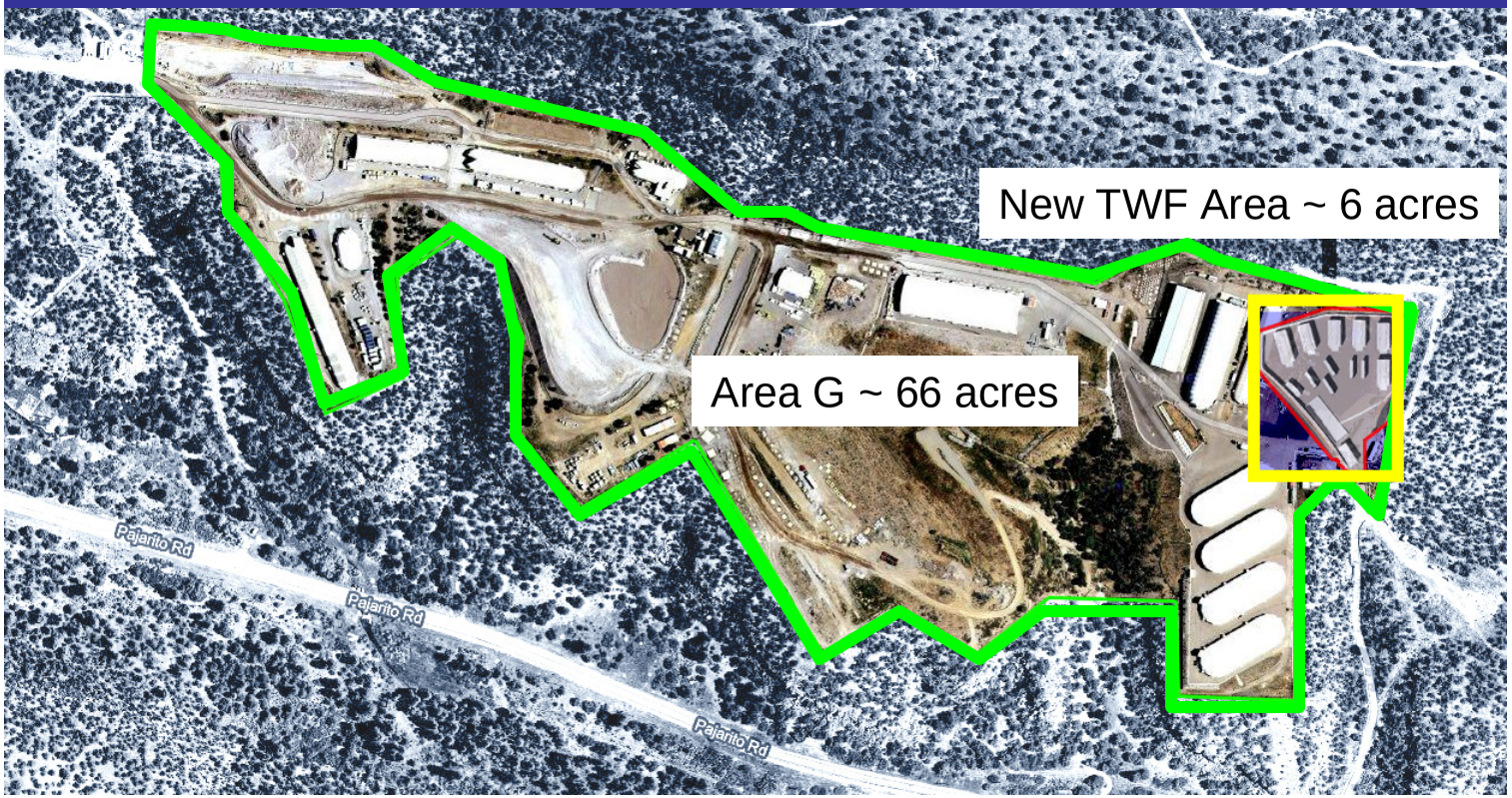

TWF Provides Container Storage and Analytical Capability to Support Disposal at WIPP

Plutonium Facility (TA-55)

Chemistry and Metallurgy Research (TA-3)

Radioactive Liquid Waste Treatment Facility (TA-50)

Off-site Source Recovery Project

Storage & Waste Certification at New TWF

Generator Intra-site Transport of WIPP compliant containers to New TWF

Intra-site Transport to RANT

Loading at Radio Assay Non-destructive Testing (RANT) Facility

Ship To WIPP

Scope removed from previous TWF Project

- ***Decontamination***
- ***Repackaging***
- ***Size Reduction***
- ***Loading to WIPP***

TWF Functions

- **Storage of Waste Containers in Protective, Enclosed Buildings**
- **Characterization and Certification of Containers in Trailers**

Location of New Facility at TA-63

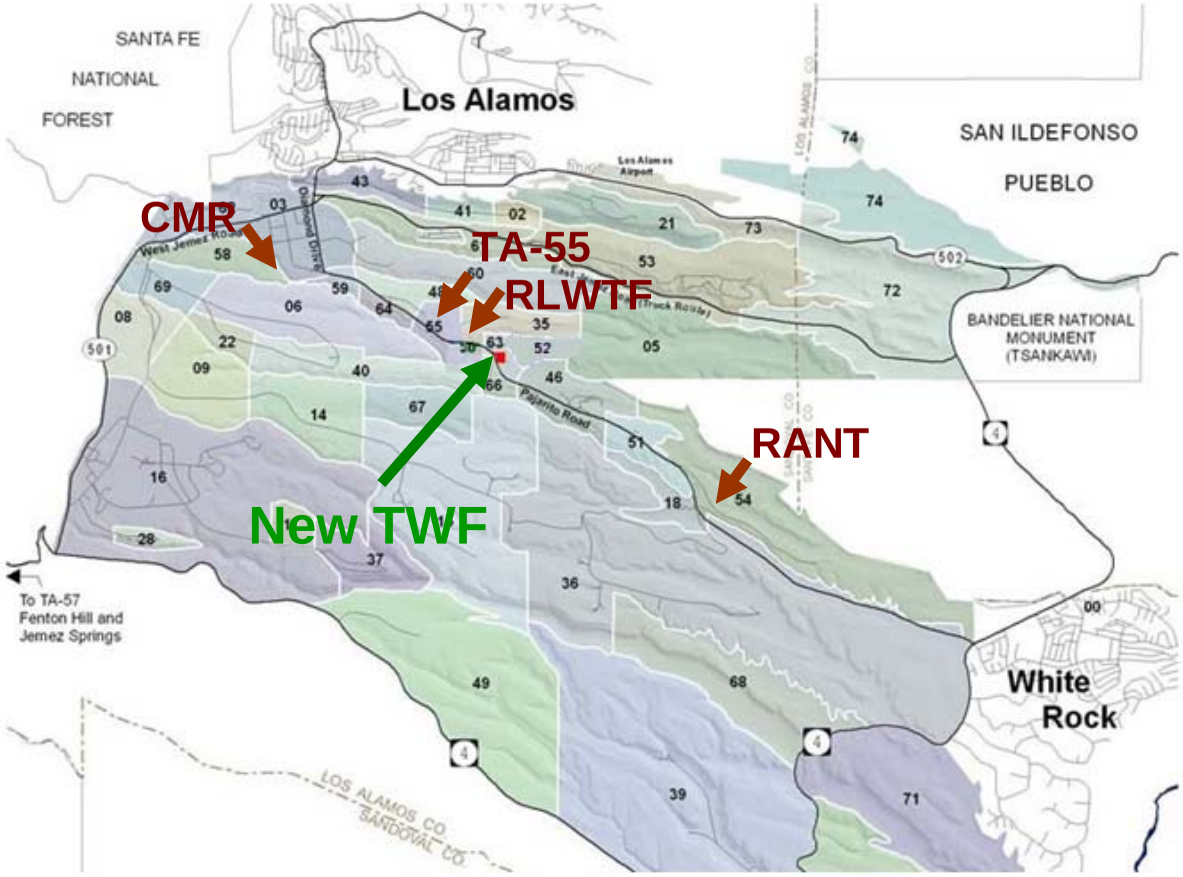

New Facility Schedule and Benefits

- TWF design for permit modification is complete.
- Construction planned to start in 2013 and finish in 2014. Facility will be ready to accept waste in early 2016.
- Ends newly generated transuranic waste shipment to Area G
- Much smaller storage capacity (2.5% of Area G capacity)
- Shorter transport distances from waste generating activities to storage area
- Interior site location, away from the Laboratory boundaries
- Enhanced protection for waste container storage.

End of TWF Project Section

- **Does anyone have questions or comments related to TWF Program purpose or functions?**

Transuranic Waste Facility Design

Presenter: Greg Juerling, TWF Project Manager

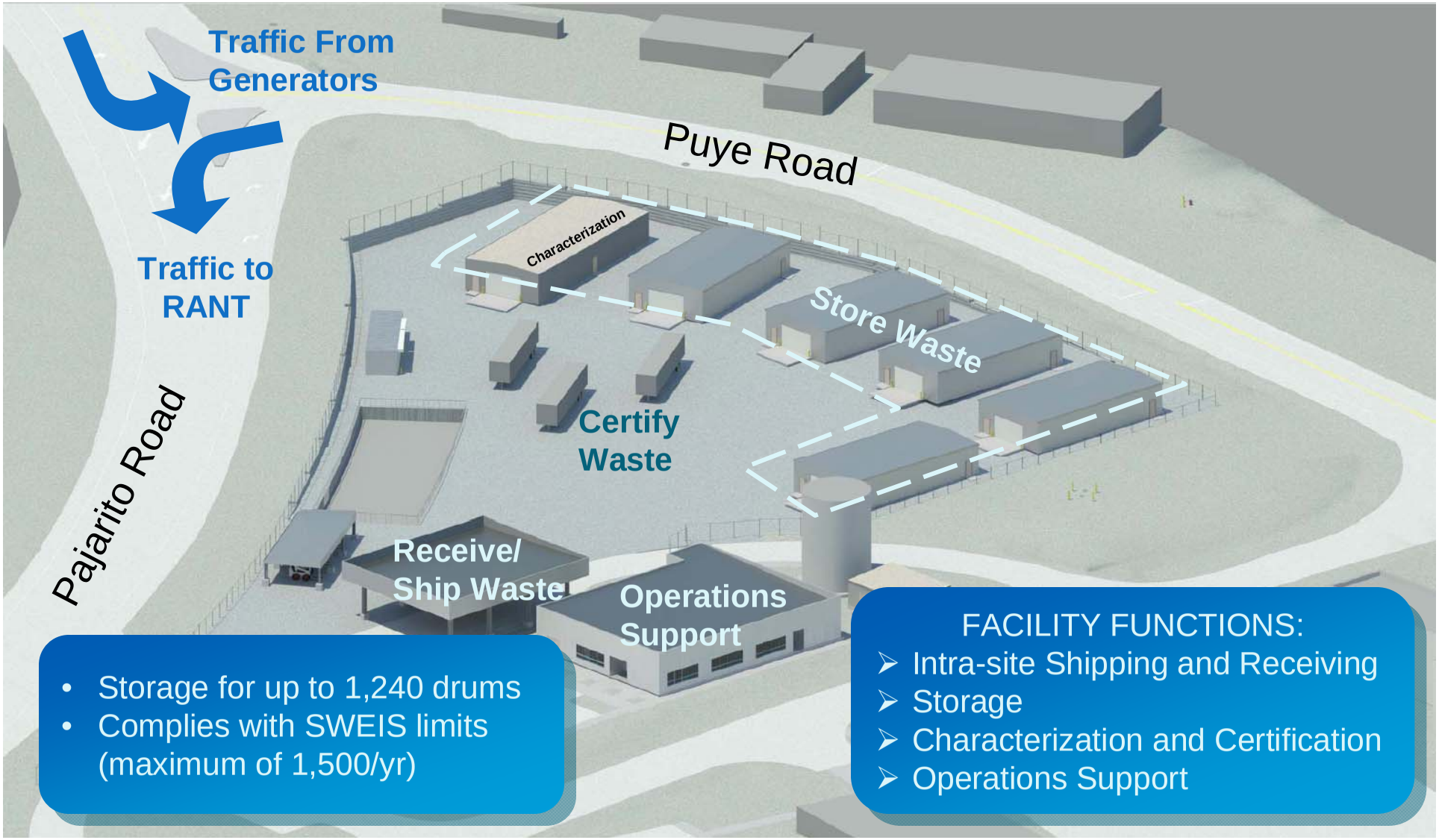

- Storage for up to 1,240 drums
- Complies with SWEIS limits (maximum of 1,500/yr)

FACILITY FUNCTIONS:

- Intra-site Shipping and Receiving
- Storage
- Characterization and Certification
- Operations Support

TWF Waste Management Activities

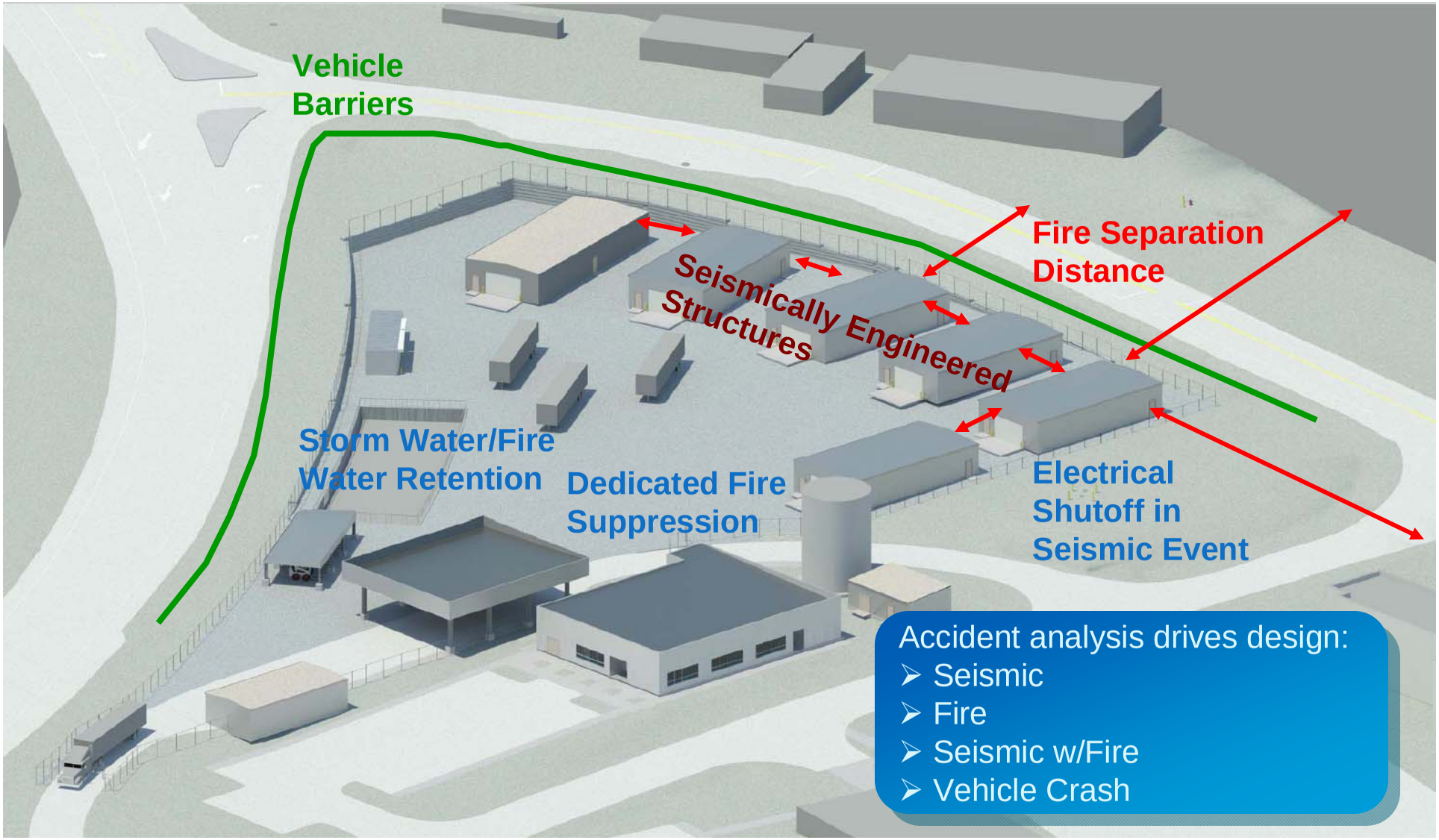

TWF Waste Protective Features

Wild land fire protection

Defensible space perimeter of 75 feet is recommended for wild land fire control

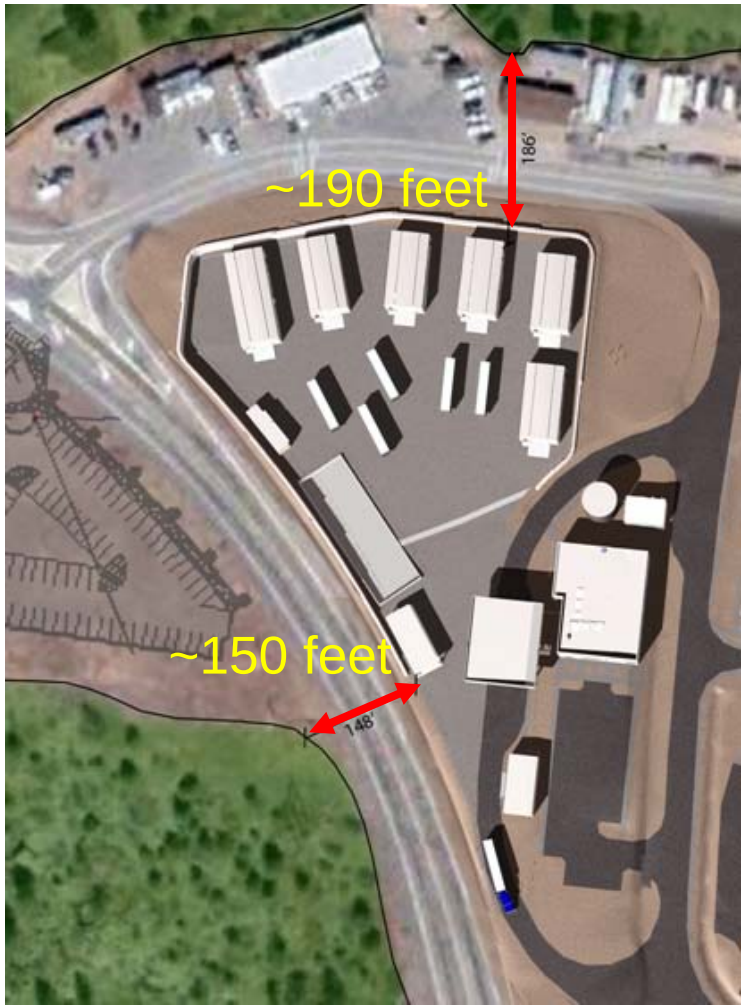

TWF Project Schedule

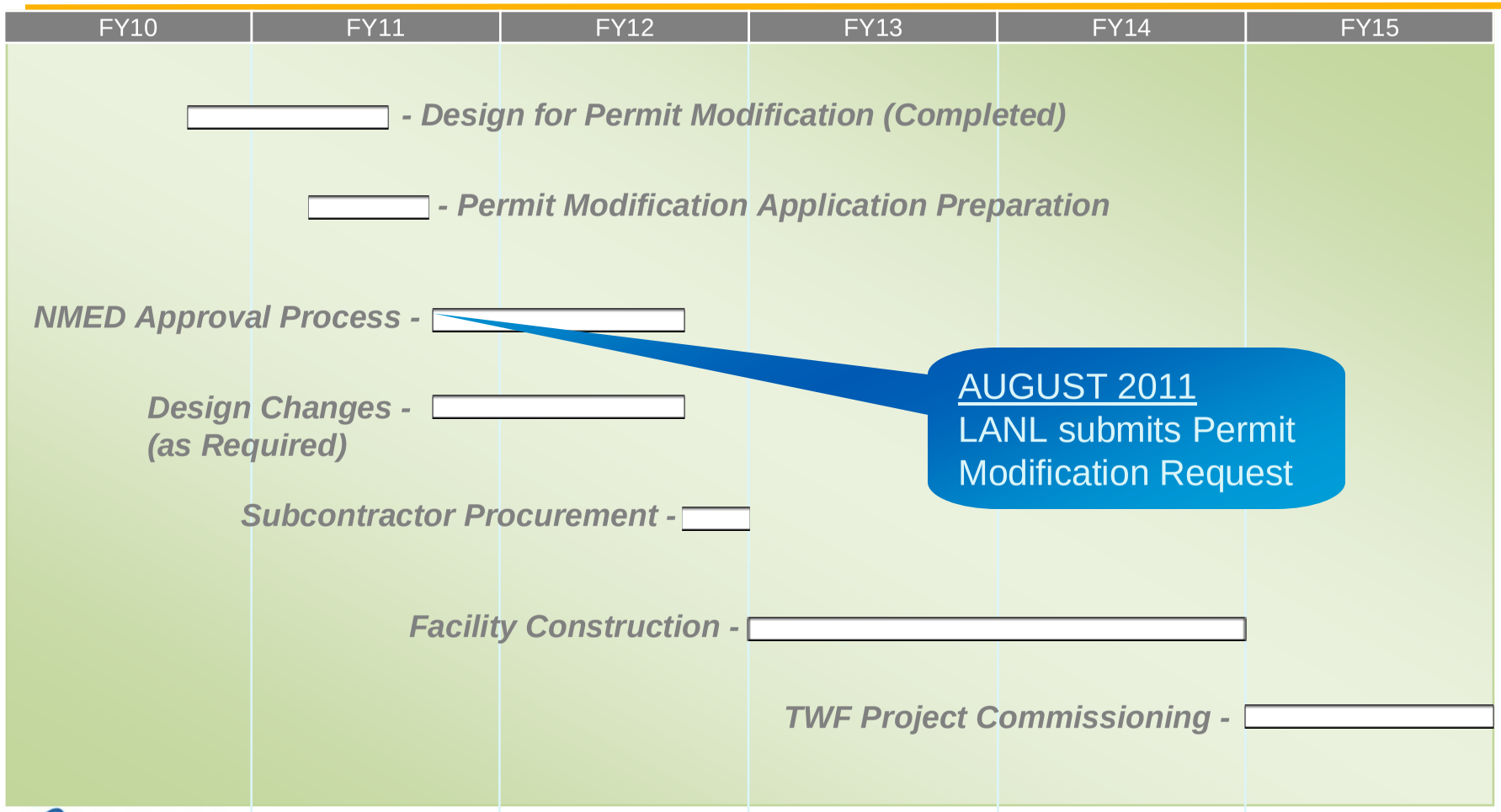

End of Project Design Section

- **Does anyone have questions or comments related to TWF design, layout, or safety features?**

Permit Modification Request

Presenter: Gian Bacigalupa, RCRA Permitting

Permit Modification Request Content

- Permit Modification Request
  - Descriptions and construction figures for unit structures
  - Waste management practices
  - Emergency equipment and procedures
  - Draws on current LANL Hazardous Waste Facility Permit conditions
  - Attachments (e.g., specifications, closure plan, revisions to permit pages)
  - Seismic Analysis: During 1992-1993, trenches were excavated across TA-63 and immediately adjacent areas. No evidence of Holocene faulting was observed.

Permit Modification Request Content (cont'd)

- Revision of current LANL Part A Permit Application incorporating the proposed new unit.
  - 1 RCRA permitted hazardous waste management unit
  - Storage at TWF – Maximum 105,875 gallons in DOT Type A Metal Containers
  - Storage capacity at new TWF is less than 2.5% of current permitted storage at Area G
- Copies of pre-submittal public information meeting written comments

Process for Public Comments

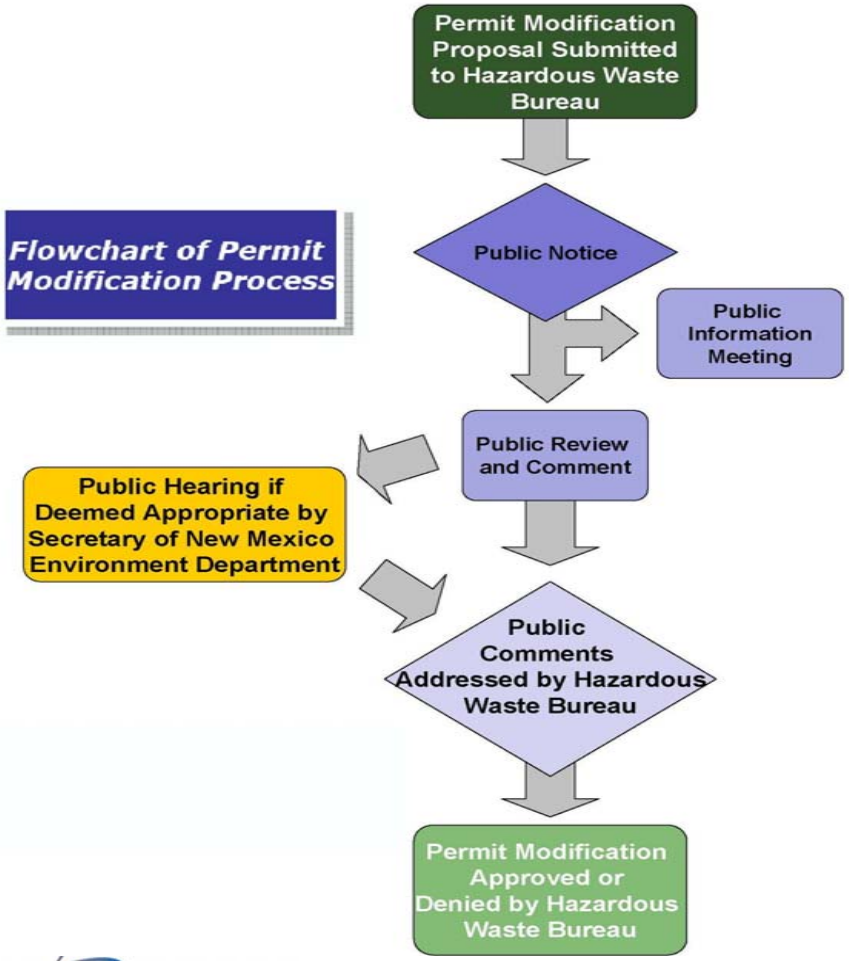

- Submit comments during this public information meeting to be included with permit modification request submittal to NMED
- Review permit modification request and submit comments to NMED before the end of the public review and comment period (August 25 to October 24, 2011).
- Submit comments at public comment meeting during public review and comment period.
- NMED reviews and responds to public comments regarding the permit modification request.
- NMED issues final decision.

Permit Modification Schedule

- **August 10, 2011.** Pre-submittal public information meeting for proposed new Transuranic Waste Facility Permit Modification. Please submit any comments by August 12, 2011.
- **August 18, 2011.** LANL anticipates submittal of permit modification request to NMED – Hazardous Waste Bureau.
- **August 25, 2011.** 60-day public comment period for the permit modification will begin with the publishing of legal notices and mailing notice to the facility mailing list.
- **September 9 – October 9, 2011.** Range of dates for public comment meeting during comment period.
- **October 24, 2011.** Public comment period ends.

Contacts for Public Comment Submittal

- Written comments may be given to the meeting facilitators tonight or sent to Lorrie Bonds-Lopez, envoutreach@lanl.gov, or at Environmental Outreach and Public Involvement, Los Alamos National Laboratory, P.O. Box 1663, MS M996, Los Alamos, NM 87545 by August 12, 2011.
- Copies of the proposed permit modification will be available for public review after the August 18, 2011 submittal at:
  - Hazardous Waste Bureau, New Mexico Environment Department, 2905 Rodeo Park Drive East, Building 1, Santa Fe, New Mexico 87505-6303 (also on website @ http://www.nmenv.state.nm.us/hwb/lanlperm.html)
  - J. Robert Oppenheimer Study Center and Research Library, 4200 West Jemez Road at Casa Grande, Los Alamos, NM 87545
  - LANL electronic public reading room: http://eprr.lanl.gov/,
- To comment after the submittal:
  - John E. Kieling, Permits Management Program Leader, NMED-HWB at (505) 428-2500 or john.kieling@state.nm.us

End of TWF Permit Modification Request Section

- **Does anyone have questions or comments related to permit modification request contents, procedures, or schedule?**

Final Questions and Comments

Presenter: Bruce McAllister, Facilitator

Los Alamos
NATIONAL LABORATORY

Wednesday, August 10, 2011
TRU Waste Facility Permit Modification Public Information Meeting @ Fuller Lodge – SIGN IN SHEET

Do you want to be on the mailing list

NAME (please print)	ADDRESS	TELEPHONE NUMBER	E-MAIL	YES	NO
John Severance	LA Monitor		John@lamonitor.com		
Eric Trujillo	LASO	665-5914	ETRUJILLO@DOEAL.GOV		
Dennis Mikeresen	LANS	665-7751	dlh@lanl.gov		
Steve Pullen	NNEP	476-6044	Steve.Pullen@state.nm.us		
Toni Chui	LASO	667-6691			✓
Kyle Deines	LANL				✓
Kelsey Sonza	LANL				✓
Austin Blanks	LANL				
Jeff Carnschal	LANL	665-2505			
Ken Hargis	LANL	667-2347	khargis@lanl.gov		✓

Los Alamos
NATIONAL LABORATORY

Wednesday, August 10, 2011
TRU Waste Facility Permit Modification Public Information Meeting @ Fuller Lodge – SIGN IN SHEET

Do you want to be on the mailing list

NAME (please print)	ADDRESS	TELEPHONE NUMBER	E-MAIL	YES	NO
John Ahlquist	Walnut Creek, CA				
BLAKE CLEGHORN					
Catherine Juarez	4740 Delaware Dr RR, NM		catherinejuarez@msn.com		
Angela Martinez	P.O. Box 1403 Santa Cruz, NM 87567		angmtz2505@gmail.com	✓	
Patricia Jones	709 C Vista Dr. Santa Fe 87501		pjones[illegible]@yahoo.com		
Joni Arends	107 Cienega SF 87501		jarends@nuclearactive.org	—	
Susan Gordon	903 W Alameda #505 SF NM 87501		sgordan@anunuclear.org		
Scott Kovac	561 W Cordova #808 #87505, SF NM		scott@nukewatch.org	✓	
Luciana Vigil Holterman	43209 NB 84 Espanola NM		vigilholterman@gmail.com		
TAMMY DIAZ	Santa Fe, NM		tammy_diaz@hotmail.com		✓

Los Alamos
NATIONAL LABORATORY

Wednesday, August 10, 2011
TRU Waste Facility Permit Modification Public Information Meeting @ Fuller Lodge – SIGN IN SHEET

Do you want to be on the mailing list?

NAME (please print)	ADDRESS	TELEPHONE NUMBER	E-MAIL	YES	NO
Nick Salazar	PO Box 644	505 629 9598	nicks@lanl.gov	X	
Janice Salazar	P.O. Box 644	606-2077	jaragon@lanl.gov	X	
Edwin Groover	1306 Bikini Pl Augusta GA 30909	706-736-3624	egroover83@hotmail.com		X
Crystal Rodriguez-Romero	—	505-927-3297	crystal@lanl.gov	X	
Terry Singell	—	505 662 5630	singell@lanl.gov		X
Patrice Harlow	LA	662 6179			no need
Dan Vitaletti	PO Box 912 LA		DVITALETTI@AOL.com		X
Joe Frey					X
Judy Frey					X
Dan Schmitt			dschmitt@lanl.gov		X

Los Alamos
NATIONAL LABORATORY

Wednesday, August 10, 2011
TRU Waste Facility Permit Modification Public Information Meeting @ Fuller Lodge – SIGN IN SHEET

NAME (please print)	ADDRESS	TELEPHONE NUMBER	E-MAIL	YES	NO
JUAN GRIEGO		505 665 6439	JUAN.GRIEGO@NNSA.DOE.GOV		
Jermaine Herrera		667-1023	jermaine@lanl.gov		

Los Alamos NATIONAL LABORATORY EST. 1943

Los Alamos National Laboratory
TRU Waste Facility MODIFCATION

COMMENT AND QUESTION CARD

Why is this meeting being held without having released the permit modification?

The storage is being reduced. Has the lab considered the smaller amount of waste that will be generated when examing the need for this facility?

How much of the existing waste has to be moved to the new facility? Why can't it stay where it is?

What new waste will be received when it opens?

Provide a paper color copy of mod Request when given to NMED.

(Optional) Name: S Gordon Telephone: _____ Email: sgordon@amanuclear.org

Mailing List: _____

Address City State Zipcode

Visit our website: www.lanl.gov/environment

Los Alamos National Laboratory
TRU Waste Facility MODIFCATION

COMMENT AND QUESTION CARD

Please put presentation and posters online.

Would like to have the storage buildings built more robustly. HARDENED STORAGE.

WE NEED TO HAVE A Copy of the DRAFT Permit for This Meeting!

MAKE These ~~Lines~~ spaces Bigger, please.

There is a smaller chance that the public will try to ask for a hearing if the public has a Copy of the draft permit at this meeting.

Please explain why RANT-type facility is not planned for here.

(Optional) Name: SK Telephone: Email:

Mailing List:

Address City State Zipcode

Thanks

Visit our website: www.lanl.gov/environment

Los Alamos National Laboratory
TRU Waste Facility MODIFCATION

Los Alamos
NATIONAL LABORATORY
EST. 1943

COMMENT AND QUESTION CARD

It appears that this facility has been well designed through a robust process. I urge it be completed as expeditiously as possible. It will lead to improved waste management.

(Optional) Name: John Ahlquist Telephone: on record Email:

Mailing List:

Address City State Zipcode

Visit our website: www.lanl.gov/environment

Los Alamos NATIONAL LABORATORY EST. 1943

Los Alamos National Laboratory
TRU Waste Facility MODIFCATION

COMMENT AND QUESTION CARD

Request for paper color copy of PMR application submitted to NMED

Please send to:

CCNS
107 Cienega
Santa Fe, NM 87501

Please coordinate calendars w/ NNSA CMRR semi-annual pt OD PMR FEED Mtg. and TWF PMR Mtg.

(Optional) Name:_____ Telephone:_____ Email: _____

Mailing List: _____

Address City State Zipcode

Please schedule only one public Mtg a week. Please honor Pueblo cultural calendar.

Visit our website: www.lanl.gov/environment

Los Alamos National Laboratory
TRU Waste Facility MODIFCATION

COMMENT AND QUESTION CARD

What is the design-basis earthquake for the proposed TWF?
What is the vertical PGA?
What is the horizontal PGA?
What is VPGA for simultaneous earthquake?
HPGA " "?
What is VPGA for synchronous earthquake?
" HPGA " "?
What is the cite for the exemption under NM law for no air quality construction permit?

(Optional) Name: CCNS Telephone: Email: CCNS@nuclearactive.org
Mailing List:
Address City State Zipcode

Visit our website: www.lanl.gov/environment

MEETING FEEDBACK CARD

Los Alamos NATIONAL LABORATORY EST. 1943

Meeting Date: 8/10/11

Meeting Title: Tru Waste Facility Permit Mod

In order to serve you better, we are collecting feedback and suggestions about our public outreach effectiveness and suggestions for project execution.

	Strongly agree	Agree	Disagree	Strongly disagree	Not applicable
I was provided the information I needed to give comments				X	
The information presented was clear and effective					
The technical staff, poster displays, and information sheets were helpful			X		

Suggestions or Comments:

A draft of the permit should have been available before this meeting.

(Optional) Name:_____ Telephone:_____ Email: _____

Mailing List: _____

Address City State Zipcode

Visit our website: www.lanl.gov/environment