EA Engineering, Science, and Technology, Inc., PBC
320 Gold Avenue SW, Suite 1300
Albuquerque, New Mexico 87102
Phone: (505) 224-9013

August 28, 2019

Mr. Justin Ball
New Mexico Environment Department
Ground Water Quality Bureau
Remediation Oversight Section
121 Tijeras Ave. NE, Suite 1000
Albuquerque, New Mexico 87102

Dear Mr. Ball:

On behalf of Suertudo Development LLC, EA Engineering, Science, and Technology, Inc., PBC is submitting the Stage 2 Abatement Plan for the former McCatharn Dairy located in Bernalillo County, New Mexico. Please let me know if you have any questions regarding the information provided in this plan.

Sincerely,

Jay Snyder, P.E.
Senior Hydrogeologist
Enclosure

Cc: John McCatharn, Suertudo Development, LLC
Peter V. Domenici, Jr., Esquire, Domenici Law Firm
File

STAGE 2 ABATEMENT PLAN
FORMER MCCATHARN DAIRY
BERNALILLO COUNTY, NEW MEXICO

Prepared for:

Suertudo Development, LLC
P.O. Box 19306
Albuquerque, New Mexico

Prepared by:

EA Engineering, Science,
and Technology, Inc., PBC
320 Gold Avenue SW, Suite 1300
Albuquerque, New Mexico 87102

August 2019

EA Project No. 1506902.01
Revision 0

EA Engineering, Science,
and Technology, Inc., PBC

320 Gold Avenue SW, Ste.1300
Albuquerque, NM 87102
Telephone: 505-224-9013

STAGE 2 ABATEMENT PLAN
FORMER MCCATHARN DAIRY (DP-585)
BERNALILLO COUNTY, NEW MEXICO

Prepared for:

Suertudo Development, LLC
Post Office Box 19306
Albuquerque, New Mexico

Prepared by:

EA Engineering, Science,
and Technology, Inc., PBC
320 Gold Avenue SW, Suite 1300
Albuquerque, New Mexico

August 28, 2019

Jay Snyder, P.E.
Senior Hydrogeologist

Date

August 2019

TABLE OF CONTENTS

Section Page

1.0 INTRODUCTION 1

2.0 DESCRIPTION OF CURRENT SITUATION 1

2.1 Site Background 1

2.2 Geology and Hydrology 2

2.2.1 Regional Geology 2
2.2.2 Site Geology 3
2.2.3 Site Hydrology 3

2.3 Discussion of Contamination 4

2.3.1 Sources of Contamination 4
2.3.2 Summary of Soil Data 4
2.3.3 Summary of Groundwater Data 4
2.3.4 Nature and Extent of Contamination 5

2.4 Contaminant Fate and Transport 5

2.5 Stage 2 Abatement Plan Area Defined 6

2.5.1 Groundwater Cleanup Goals 7

3.0 ASSESSMENT OF ABATEMENT OPTIONS 7

3.1 Source Area Soil Contamination Abatement Options 7

3.2 Solute Plume Abatement Options 7

3.2.1 No Further Action 7
3.2.2 Limited Action 7
3.2.3 Containment 8
3.2.4 Treatment 9

4.0 DESCRIPTION OF PREFERRED ABATEMENT OPTION 10

4.1 Institutional Control 10

4.2 Groundwater Extraction with Irrigation Reuse 10

4.3 Long-Term Monitoring 10

5.0 DESIGN OF PREFFERED ABATEMENT OPTION 11

5.1 Well Hydraulic Analysis 11

5.2 evaluation of cleanup time 12

5.3 Irrigation Demand Analysis 13

5.4 Pump Design 13

6.0 ACCESS AND ADMINISTRATIVE REQUIREMENTS 13

7.0 MODIFICATION OF MONITORING PLAN 14

7.1 Sampling Frequency 14
7.2 Long-Term Monitoring protocols 14
7.2.1 Well Gauging 14
7.2.2 Hand-Bailed Well Sampling 14
7.2.3 Submersible Pump Well Sampling 15
7.2.4 Extraction Well and Water Supply Well Sampling 15
7.2.5 Sample Handling 15
7.2.6 Decontamination and Purge Water 15
8.0 REPORTING AND PERFORMANCE ASSESSMENT 15
8.1 Semi-Annual Monitoring and Reporting 15
8.2 Annual Reporting and Performance Assessment 16
8.3 Contingency Measures 16
9.0 MAINTENANCE ACTIVITIES POST TERMINATION OF ABATEMENT 16
10.0 SCHEDULE 16
11.0 PUBLIC NOTIFICATION 16
12.0 REFERENCES 18

LIST OF FIGURES

Figure 1 Site Location Map
Figure 2 Site Map with Process Areas
Figure 3 Potentiometric Surface Map – December 2015
Figure 4 Potentiometric Surface Map – June 2018
Figure 5 Groundwater Impacts – December 2015
Figure 6 Groundwater Impacts – June 2018
Figure 7 Proposed Lot Boundaries and Irrigation Area
Figure 8 Preferred Abatement Option –Plan View
Figure 9 Process Flow Diagram
Figure 10 Schedule

LIST OF TABLES

Table 1 Well Construction Details
Table 2 Summary of Monitoring Well Fluid Gauging Data
Table 3 MW-5 Specific Capacity Test 6-15-18
Table 4 Summary of Groundwater Analytical Results
Table 5 Quality Assurance/Quality Control Requirements
Table 6 Long-Term Monitoring Regimen

LIST OF APPENDICES

Appendix A Boring Logs
Appendix B Concentration Trend Graphs
Appendix C Irrigation Analysis
Appendix D Sprinkler and Pump Specification
Appendix E Public Notice

1.0 INTRODUCTION

On behalf of Suertudo Development, LLC, EA Engineering, Science, and Technology, Inc., PBC (EA) has prepared this Stage 2 Abatement Plan (S2AP) for the Former McCatharn Dairy (Discharge Plan 585 [DP-585]). McCatharn Dairy is located at 6363 New Mexico State Highway 47, Albuquerque, New Mexico (Figure 1).

This plan is organized with the following New Mexico Administrative Code (NMAC) 20.6.2.4106.E and contains the following Sections:

- Description of Current Situation
- Assessment of Abatement Option
- Description of Preferred Abatement Option
- Modification of Monitoring Plan
- Reporting and Performance Assessment
- Site Maintenance Activities After Termination of Abatement Activities
- Schedule
- Public Notification; and References.

2.0 DESCRIPTION OF CURRENT SITUATION

2.1 SITE BACKGROUND

McCatharn Dairy is located south of Albuquerque at the southwest corner of Broadway Boulevard and Desert Road (Figure 1). The immediate area is primarily commercial business with farmland to the west. The Dairy had been in operation since the 1950s but was closed in July 2013.

The McCatharn Dairy has been in operation since the 1950s. A site map showing manure storage areas, land application areas, storm water detention pond, wastewater impoundments, and locations of soil borings and monitoring wells is provided as Figure 2.

The original Lagoon #1 was unlined and used for wastewater storage/evaporation through 1990. In 1991, Lagoon #1 was redesigned and rebuilt with a bentonite liner. At the same time, Lagoon #2 was designed and constructed with a bentonite liner to provide additional wastewater storage. Lagoon #3 was designed and installed unlined to accommodate storm water runoff collection.

In 1992, groundwater monitoring well MW-1 was completed at the south berm of Lagoon #1, and annual groundwater monitoring was initiated. In addition, documentation of weekly inspections and quarterly lagoon analytical reports were initiated.

New Mexico Environment Department (NMED) Ground Water Quality Bureau (GWQB) initially identified nitrate contamination in the groundwater beneath the site in MW-1, and the dairy was the suspected source. In response to elevated nitrate concentration in groundwater collected from MW-1, four soil borings were completed in the area of the lagoons in 1998; two borings were completed as monitoring wells (MW-2 and MW-3), and quarterly groundwater

sampling was implemented to include all three monitoring wells (Figure 2). In mid-2001, Lagoon #1 was synthetically lined, and Lagoon #2 was synthetically lined in 2003. In June 2007, MW-4 was completed near the east property boundary (Figure 2).

Chronology of Events

Date	Event
August 1988	Monitoring well MW-1 installed, and groundwater monitoring commenced in December 1988.
February 1989	Dairy proposes to construct a new lagoon with 8% bentonite mixed with native soil liner. Prior to this time, the dairy was discharging into two smaller manure-lined lagoons by gravity flow. The proposal was implemented. This is referred to as Lagoon #1.
August 1991	Plans were submitted to combine and bentonite line the two old lagoons to create one larger lagoon referred to as Lagoon #2. This was completed in December 1991, and six inches of manure was placed on top of the soil/bentonite mixture.
September 1998	Monitoring wells MW-2 and MW-3 installed and added to the groundwater sampling regimen.
September 2000	Plans submitted to synthetically line Lagoon #1 with 60 mil HDPE liner.
May 2001	The Snow Company completed lining Lagoon #1, and a solids separator was also installed.
March 2002	Temporary permission to land apply water from Lagoon #2 approved. This lagoon was emptied so that it could be synthetically lined.
September 2003	The Snow Company finished lining Lagoon #2 with 60 mil HDPE liner.
February 2007	Monitoring well MW-4 installed and added to the groundwater sampling regimen.
March 2015	Monitoring wells MW-5 and MW-6 installed and added to the groundwater sampling regimen.
December 2015	Groundwater sampling event
June 2018	Groundwater sampling event

2.2 GEOLOGY AND HYDROLOGY

2.2.1 Regional Geology

The physiography of the Albuquerque area is controlled by the Rio Grande rift. Most of Albuquerque area lies on an apron of material eroded from the mountains surrounding the rift axis and deposited within it. Thousands of feet of sediment have consolidated to form a porous zone that stores large quantities of water in the Albuquerque Basin.

According to the United States Geological Service (USGS) (Bartolino and Cole 2002), the major groundwater resource in the Albuquerque, New Mexico area is the Santa Fe Group Aquifer. The Santa Fe Group aquifer system is divided into three parts: the upper (from less than 1,000 to 1,500 feet thick), middle (from 250 to 9,000 feet thick), and lower (from less than 1,000 to 3,500

feet thick). Much of the lower part has low permeability and poor water quality; thus, groundwater is mostly withdrawn from the upper and middle parts of the aquifer. Only the upper 2,000 feet of the aquifer is typically used for groundwater withdrawal. Groundwater from the Santa Fe Group aquifer system is currently a major source of water for municipal supply, domestic, commercial, and industrial use in the middle Rio Grande Basin.

2.2.2 Site Geology

At the site, the soil consists of ancestral Rio Grande fluvial deposits consisting of brown silty sand to coarse sand with gravel. The bore logs from soil borings and monitoring wells show no clay to impede drainage and migration of contaminants from the impoundments to the groundwater. Copies of boring logs are provided in Appendix A.

The soil as logged is consistent with a permeability of 28 feet per day (roughly 10^{-2} cm/sec) as discussed below. So, although the soil at the site is sandy and highly permeable, providing little inhibition to contaminant migration, it should be equally amenable to cleanup by extractive technologies such as pumping and reuse.

2.2.3 Site Hydrology

The direction of groundwater flow is just south of due east, and the hydraulic gradient is around one foot per thousand (0.001 ft/ft), which varies slightly in time and across the site. Potentiometric surface maps for December 2015 and June 2018 are provided as Figures 3 and 4, respectively. Well construction details are provided in Table 1, and water level gauging data is presented in Table 2.

In order to establish well capacity, Rogers and Company, under the direction of INEX, conducted a well capacity test on MW-5 in March 2015. The field data, as well as analysis, is presented in Table 3. MW-5 was pumped at a rate of 11.5 gallons per minute (gpm) for four hours. Steady state drawdown was achieved instantaneously—in fact MW-5 developed slightly in response to pumping, with initial drawdown of 6.39 feet improving to the steady 6.02 feet 2 hours into the test.

Well capacity (pumping rate [Q] divided by drawdown [s]), was calculated, then transmissivity estimated using the method for unconfined aquifers provided in Groundwater and Wells (Driscoll 1986, page 1021). The transmissivity was in turn used to estimate hydraulic conductivity by dividing the transmissivity by aquifer thickness. Ignoring partial penetration effects, the aquifer thickness was set equal to MW-5 screen submergence, or 13.8 feet on the day of the test.

The transmissivity was calculated as 2,865 gpm/ft/day, or 383 ft^2/day. The corresponding hydraulic conductivity is 28 feet per day (7×10^{-3} centimeters/second), typical of medium to coarse sand (Domenico and Schwartz 1990). For the purpose evaluating abatement options, transmissivity of 383 ft^2/day and hydraulic conductivity of 28 ft/day will be used.

2.3 DISCUSSION OF CONTAMINATION

2.3.1 Sources of Contamination

Potential sources of contamination at the Former McCatharn Dairy include historic unlined wastewater impoundments (lagoons), feed pen infiltration, and deep infiltration from land application. Groundwater monitoring data suggest infiltration through the feed pens and land application areas are not the problem; rather, discharge from the bottom of the wastewater lagoon through the sandy soils, then to groundwater is the source of contamination. This is supported by declining source area nitrate trends observed in MW-1 and MW-3 once the wastewater lagoons were lined, thereby eliminating continued discharge.

2.3.2 Summary of Soil Data

Subsurface soil investigation was conducted by Innovative Explorations (INEX) in 1998. Four soil borings were advanced, with two borings installed in source areas and two borings converted to monitoring wells. Soil boring SB-1 was installed between the main waste impoundment and the winter impoundment (Figure 2), soil boring SB-2 was installed in the storm water runoff pond, monitoring well MW-2 was installed at the upgradient edge of the dairy, and MW-3 was installed at the southeast corner of the winter impoundment and downgradient of existing MW-1.

The soil samples were field screened by INEX for total nitrogen using a Hach N-Trak field kit, with select samples analyzed in the laboratory for total Kjeldahl nitrogen (TKN). The TKN values are expected to exceed the nitrate results so it is conservative to compare TKN results to Soil Screening levels for various nitrogen pathways in Table A-1 (NMED 2017). The applicable soil screening levels (SSL) are: Residential Soil, non-cancer 125,000 mg/kg; Construction Worker Soil, non-cancer 566,000 mg/kg; and New Mexico Groundwater or Federal Maximum Contaminant Level (MCL) based SSL at DAF 10 of 67.3 mg/kg for soil contaminants leaching to groundwater. DAF 10 was used for a 30-acre source area as described on page 76, NMED Risk Assessment Guidelines (NMED 2017).

At depth (e.g., SB-1 at 58-60 ft bgs and 68-70 ft bgs; SB-2 28-30 ft bgs; MW-3 18-20 ft bgs) TKN results ranged from 42 to 84 mg/kg, which are all near the DAF 10 SSL of 67.3. These results are from 1998, and conditions have certainly improved since the dairy has ceased operations and the impoundments are no longer loaded with waste. Therefore, based on these results, no abatement of soil is proposed – rather, confirmation samples will be collected as groundwater abatement achieves the MCL for nitrate near termination of abatement. The complete INEX report *Subsurface Soil and Groundwater Investigation: McCatharn & Son Dairy, NM State Road 47, Albuquerque, NM* is included as Appendix F to Final Site Investigation Report, McCatharn Dairy (EA 2018).

2.3.3 Summary of Groundwater Data

Groundwater monitoring has been conducted in monitoring well MW-1 at the Dairy since December 1988. Monitoring wells MW-2 and MW-3 were added to the monitoring regimen in September 1998; monitoring well MW-4 was added in June 2007, and wells MW-5 and MW-6

were added in June 2015.

The highest chloride concentration observed at the site historically was in well MW-3 at 590 mg/L during the June 2006 event. However, during the last two sampling events, December 2015 and June 2018, all Dairy monitoring wells were below the New Mexico Water Quality Control Commission (NMWQCC) standard of 250 mg/L for chloride.

The highest nitrate concentration observed at the site historically was in well MW-1 at 280 mg/L during the September 1992 event. Nitrate concentrations in well MW-3 peaked during the March 2004 event at a concentration of 230 mg/L. Both wells have had decreasing trend lines over the last decade. The nitrate concentration trend line for well MW-4 appears diagnostic of background concentrations due to being stable for over 15 years.

During the December 2015 event, wells MW-1, MW-3, and MW-5 were above the NMWQCC standard for total dissolved solids (TDS) of 1,000 mg/L with the highest concentration of 2010 mg/L observed in well MW-3. In June 2018, MW-1 had dropped below standard at 778 mg/L. Wells MW-1, MW-2, and MW-3 have had a decreasing TDS trend line for about a decade.

No McCatharn Dairy monitoring well has ever exceeded the NMWQCC standard of 600 mg/L for sulfate.

NMED GWQB collected a sample on January 19, 2018 and two samples (initial and after 45-minute purge) on April 16, 2018 from the Copart Well (Figure 6 and Table 4). Highest nitrate concentration was 12.7 mg/L, slightly above the standard of 10 mg/L.

2.3.4 Nature and Extent of Contamination

Historical analytical data for analytes chloride, nitrate, TDS, total Kjeldahl Nitrogen (TKN), and sulfate are summarized in Table 4 and trend graphs are presented in Appendix B. Distribution of contaminants in groundwater is shown on Figure 5 for December 2015, and on Figure 6 for June 2018. Soil contamination appears to be limited to in and around the waste impoundments and the storm water runoff pond. The nitrate groundwater plume emanates from these sources and completes the pathway from release point to groundwater. Detections of nitrate downgradient at the Copart Well have not been explicitly linked to the dairy plume; however; for the purpose of this S2AP it is assumed the preferred abatement option must be protective of this point of exposure.

2.4 CONTAMINANT FATE AND TRANSPORT

The groundwater seepage velocity can be calculated from the hydraulic conductivity estimated from the well capacity test, the measured hydraulic gradient from Figure 4, and an estimate of effective porosity in unconsolidated sand. The transmissivity obtained from the well capacity test is 2,865 gallons per foot per day, or 383 ft^2/day. The hydraulic conductivity (K) was then estimated by using an aquifer thickness equal to the screen submergence below the water table in MW-5, 13.8 feet. Dividing the transmissivity into the aquifer thickness yields a K of 28 feet per day. The hydraulic gradient can be directly measured between MW-1 and MW-6 (see Figure 4),

and is 0.5 feet in 625 feet, equal to 0.0008 ft/ft. Finally, the effective porosity of unconsolidated sand was estimated as 90 percent the total porosity (Hudak 1994). For a total porosity estimated at 30 percent for sand (Domenico and Schwartz 1990), the effective porosity is estimated at 27 percent.

Seepage velocity is calculated by Darcy's Law:

$$V = \frac{1}{\varphi_e} K * \frac{dH}{dl} = \frac{1}{0.27} * 28 * 0.0008 = 0.083 \frac{ft}{day} = 30.3 \frac{ft}{yr}$$

Where: φ_e = effective porosity (dimensionless)
K = hydraulic conductivity (ft/day)
$\frac{dH}{dl}$ = hydraulic gradient along flow path (ft/ft)

Since the gradient is not uniform across the site, and to be conservative, a groundwater seepage velocity of 40 feet per year will be used for analysis of abatement options. Since neither nitrate, nor chloride, sulfate, or TDS sorb appreciably onto aquifer matrix, the solute transport will be considered unretarded, such that all dairy-related contaminants migrate at the seepage velocity of groundwater–40 feet per year.

The contaminants of concern at the site are nitrate, chloride, sulfate and TDS. Although transformation of nitrate and sulfate is possible under anaerobic conditions, the groundwater at the site is considered aerobic and of good quality. Therefore, transformation is considered negligible and this S2AP has been prepared assuming all site contaminants are conservative. This implies they do not partition significantly with soil, and their transport in groundwater is not retarded (i.e., contaminants migrate with the same velocity as the groundwater).

Nitrate migration was modeled using site parameters in the Final Site Investigation Report (EA 2018). The results of this analysis indicate that nitrate from McCatharn Dairy may have migrated downgradient sufficiently historically to impact the Copart Well, and this cannot be discounted since very little is known about downgradient nitrate distribution prior to installation of MW-5 and MW-6. However, since lining the lagoons, contaminant concentrations have stabilized and declined substantially, and the modeling indicated that risk relative to current source concentrations which are less than half the initial concentrations are not a problem. Regardless, the fact the Copart Well represents an actual potential receptor, active remedy for groundwater impacts is appropriate.

2.5 STAGE 2 ABATEMENT PLAN AREA DEFINED

Based on the current extent of nitrate in groundwater, the abatement plan area (APA) is defined by Lot 4 on the replatted dairy property (Figure 7). In addition, the upgradient monitoring well MW-2 and downgradient Copart Well will be included in the monitoring regimen. Inclusion of Copart Well is appropriate since it (1) has nitrate impacts at the WQCC standard, and (2) is directly downgradient of the lagoons at Former McCatharn Dairy.

2.5.1 Groundwater Cleanup Goals

The primary contaminant of concern is nitrate since it has a human health-based standard under Section 3103.A of 20.6.2 NMAC. Other dairy waste contaminants of concern include chloride, sulfate, and TDS. Standards for these contaminants in groundwater include: nitrate 10 mg/L, chloride 250 mg/L, sulfate 600 mg/L and TDS 1,000 mg/L.

3.0 ASSESSMENT OF ABATEMENT OPTIONS

There are several abatement options for nitrate, chloride, sulfate and TDS in groundwater contamination. A discussion of the abatement options, technology and process, effectiveness, implementability, and cost effectiveness are discussed below.

3.1 SOURCE AREA SOIL CONTAMINATION ABATEMENT OPTIONS

Based on source area soil contaminant levels, and declining source area monitoring well nitrate concentrations observed in MW-1 and MW-3, abatement of soil contamination does not appear necessary. Section 2.4.2 provides a discussion of soil results compared to applicable SSLs.

3.2 SOLUTE PLUME ABATEMENT OPTIONS

Several abatement options are available to control the plume migration and reduce contaminant concentrations in groundwater. Based on the contaminant fate and transport as discussed in Section 2.4 above, the goals of the selected abatement option(s) include:

- Prevent migration of nitrate in groundwater to Copart Well while the S2AP is being implemented;
- Prevent exposure throughout the APA;
- Reduce contaminant mass via groundwater extraction and reuse; and
- Conduct long-term monitoring to demonstrate protectiveness of abatement option.

To achieve these goals, several options may be appropriate for all or parts of the plume, and advantages and disadvantages of these options are discussed below.

3.2.1 No Further Action

No further action would require that no action be taken for the solute plume. No further action requires no active remediation and no monitoring of groundwater. No action is not protective, is not in accordance with abatement requirements, and is therefore rejected.

3.2.2 Limited Action

Limited action includes institutional controls, engineering controls and long-term monitoring. Limited action options are implementable, and two limited actions are selected in the proposed

S2AP: (1) New Mexico Office of the State Engineer (OSE) Order proscribing drilling new wells in the solute plume and (2) long term monitoring (LTM).

Engineering controls are not necessary. No uncontrolled waste exist on site, soil contamination does not appear to pose a leaching threat, and the liners remain in place which substantially restrict infiltration.

3.2.3 Containment

Containment is typically facilitated with vertical barriers which physically restrict groundwater movement, and hydraulically which contains groundwater via pumping and capture. These options are discussed below.

3.2.3.1 Vertical Barriers

Vertical barriers include slurry walls, sheet piling, and grout curtains. These physical barriers are used to limit and/or eliminate the migration of contaminants in groundwater. They are typically utilized to isolate significant sources of contaminant mass loading to groundwater. This is not a problem at McCatharn Dairy – the mass loading to groundwater has declined since the lagoons were lined, and groundwater trends suggest declining loading. Finally, the depth to groundwater renders this technology economically and technically infeasible.

3.2.3.2 Hydraulic Containment

Hydraulic control is viable for containment of solute plumes and is typically used where an actual point of exposure (e.g, water supply well, surface water body, etc.) is threatened. In the case of McCatharn Dairy, the potential impact at Copart Well fits this exposure scenario, and hydraulic containment to arrest plume migration is appropriate. Moreover, treatment of impacted groundwater is not required because it can be reused for irrigation of crops by rule, it is very cost effective.

Hydraulic containment is achieved by pumping a sufficient rate of well (or wells) discharge to create a capture zone that contains the width of the solute plume. Pumping the groundwater to provide containment is straightforward, and since the fields to be irrigated are proximal, conveyance of pumped water is straightforward as well. Irrigation can be facilitated with impact sprinklers for the flow rates considered for McCatharn Dairy. In summary:

- Hydraulic containment is protective of potential receptors in that it arrests contaminant migration;
- Groundwater extraction and reuse as irrigation water will effectively cleanup groundwater since partitioning onto soil is considered negligible for the contaminants of concern;
- This technology is very cost effective since treatment of extracted groundwater is not required: it can be directly reused as irrigation water on land application areas by rule; and

- Finally, Former McCatharn Dairy has ample land application area to facilitate reuse at agronomic rates, so even in winter, plenty of ground is available for winter crop irrigation at agronomic uptake rates.

3.2.4 Treatment

3.2.4.1 In Situ Treatment

Treatment of contaminated groundwater for nitrate, chloride, sulfate and total dissolved solids can be addressed in situ (in place) or ex situ (typically above grade). Nitrate is amenable to in situ treatment, which involves creating reducing conditions in the aquifer which results in denitrification (i.e., reduction of nitrate ultimately to nitrogen). Sulfate can be reduced as well. However, chloride is conservative and cannot be reduced. Finally, change from aerobic aquifer to anaerobic conditions can mobilize redox metals such as arsenic, iron, and manganese.

Amendment of the aquifer with carbon-based electron donors is required periodically to maintain anaerobic conditions. At sites where depth to groundwater is shallow, this can be facilitated by direct push (e.g., "Geoprobe") technique. However, at sites where depth to groundwater is greater than can be reached by direct push, injection wells are required. Because the amendments foster microbiological growth, well rehabilitation and redevelopment is required. Hydraulic control is not established, so the treatment zone must be active to prevent downgradient migration of contaminants. Because the Copart Well presents a current downgradient receptor that must be protected, and because creating anaerobic conditions could solubilize deleterious metals, in situ reduction of nitrate is rejected.

MNA is the process that includes a variety of physical, chemical, or biological processes that, under favorable conditions, act without human intervention to reduce the mass, toxicity, mobility, volume, or concentration of contaminants in soil or groundwater. However, conditions for implementing MNA may not be favorable because the Copart Part represents a threatened water supply. (USEPA 1999). MNA is therefore rejected.

3.2.4.2 Ex Situ Treatment

Ex situ treatment, as applied to ground water, involves treating ground water once removed or pumped from the aquifer, so that it is suitable for beneficial reuse, discharge to surface water, or injection back into the aquifer to offset consumptive use from and appropriation perspective. Ex situ treatment for nitrate, chloride, sulfate and TDS is expensive, and typically involves reverse osmosis.

Fortunately, reuse of nitrate impacted pumped groundwater for irrigation is allowed, and Suertudo has filed a Discharge Plan (DP) application to facilitate this option. Once the DP is approved, reuse of pumped groundwater for crop production is the favored technology. Removal of nitrate is by plant uptake and harvest.

4.0 DESCRIPTION OF PREFERRED ABATEMENT OPTION

The preferred abatement option for the Former McCatharn Dairy plume includes the following options:

- Institutional control in the form of an OSE order to prohibit new well installation within the APA;
- Groundwater extraction with reuse for crop irrigation;
- Long-term monitoring in all portions of the APA;

The selected abatement options are briefly discussed in the following sections.

4.1 INSTITUTIONAL CONTROL

Suertudo Development, LLC will request NMED GWQB to petition the OSE to draft a State Engineer Order to prohibit construction of a well in the affected water bearing zone. The order will be established in accordance with 19.27.5.13.A. NMAC Rejection of Application, which states:

> *"The state engineer may reject an application for a 72-12-1.1 domestic well permit when the proposed 72-12-1.1 domestic well is to be located in an area where a restriction on the use of water or the drilling of new wells has been imposed by a court. The state engineer may reject an application for a 72-12-1.1 domestic well permit when the proposed 72-12-1.1 domestic well is to be located in an area of water quality concern where a prohibition on or a recommendation against the drilling of new wells has been established by a government entity."*

In this matter, the "area where a restriction on the use of water or the drilling of new wells" shall be the APA as defined in Section 1.3.5. The government entity establishing the prohibition is NMED. Suertudo Development, LLC will provide NMED the necessary documents to support the prohibition.

4.2 GROUNDWATER EXTRACTION WITH IRRIGATION REUSE

Former McCatharn Dairy proposes impacted groundwater pumping with agronomic application to fields associated with the former dairy. This will reduce groundwater contaminants within the plume and provide hydraulic containment to halt downgradient migration. An analysis of this option is provided in Section 5.0.

4.3 LONG-TERM MONITORING

Long-term monitoring will be performed on wells that are below NMWQCC standards in accordance with quality control requirements provided in Table 5. This will ensure the plume is stable and not expanding into areas currently below standards. The monitoring regimen will be in accordance with Table 6. Wells will be sampled as specified in the approved Quality Assurance Project Plan for the S1AP.

If COC concentrations in well(s) specified for LTM statistically increase to above standards, then they may be moved to the MNA regimen discussed below.

5.0 DESIGN OF PREFFERED ABATEMENT OPTION

The layout of the preferred abatement option is shown on Figure 8, and a process flow diagram (PFD) is provided in Figure 9. Within Lot 4, five acres are available to irrigate crop as shown on Figure 8. The eastern wastewater pond will be incorporated into the design to provide storage and evaporation of pumped water as a contingency.

5.1 WELL HYDRAULIC ANALYSIS

The capture width of pumping MW-5 needs to be calculated to ensure it captures the entire plume. The minimum design capture width is 800 feet, or 400 feet north and south of MW-5 so that the width of the lagoons (350 feet) is captured.

The full capture width of a pumping MW-5 at its capacity of 11.5 gpm in a uniform flow field (i.e., uniform hydraulic gradient) is given by David Keith Todd in *Groundwater Hydrology 2nd Ed*. (1980):

$$Y_L = \frac{Q}{Kbi}$$

Where Q = pumping rate = 11.5 gpm = 1.54 ft^3/min, K = hydraulic conductivity = 28 ft/day = 0.0194 ft/min, b = aquifer thickness = 20 ft, i = hydraulic gradient = 0.00134

$$Y_L = \frac{1.54\left(\frac{ft^3}{min}\right)}{\left(0.0194\left(\frac{ft}{min}\right)\right)(20\,ft)\left(0.00134\left(\frac{ft}{ft}\right)\right)} = 2{,}962\,feet$$

And capture is robustly predicted. The width of the capture zone is quite large in response to the low hydraulic gradient.

Using 800 feet for minimum design capture width means the flow rate needs to be 800/2962, or 0.27 times 11.5 gpm, or 3.1 gpm. This is the equivalent continuous flow rate.

The downgradient extent of capture (i.e., to the east of MW-5) is given by:

$$X_L = \frac{Q}{2\pi Kbi}$$

Or:

$$Y_L = \frac{1.54\left(\frac{ft^3}{min}\right)}{\left(2 * \pi * 0.0194\left(\frac{ft}{min}\right)\right)(20\ ft)\left(0.00134\left(\frac{ft}{ft}\right)\right)} = 472\ feet$$

The projected capture zone at full pumping rate of 11.5 gpm is significantly downgradient of MW-6. Setting the capture to east at the distance to MW-6 which is 164 feet, a pumping rate of 0.35 of 11.5 gpm, or 4 gpm. At 3.1 gpm, the downgradient capture is 127 feet. Since the design seepage velocity is 40 ft/year (Section 2.4), the minimum pumping rate necessary for capture of the plume width (3.1 gpm) will capture 3 years of downgradient seepage. This is important to consider for periods when pumping is not practicable due to agronomic considerations: cessation of pumping for a few months will not result in a loss of capture. Rather it will only delay cleanup time.

5.2 EVALUATION OF CLEANUP TIME

As mentioned in Section 4.5, the retardation factor for nitrate, chloride, sulfate and TDS can be assumed as 1. This means that groundwater cleanup can be attained with minimal pore volume exchange. EPA in *Design Guidelines for Conventional Pump-and-Treat Systems* (EPA 1997) provides cleanup timeframe in terms of pore volume exchange related to partitioning onto soil matrix as:

$$Number\ Pore\ Volumes = -R * \ln\left(\frac{C_{standard}}{C_{initial}}\right)$$

Where R is the retardation coefficient, 1.0 for nitrate, $C_{standard}$ is the WQCC standard for nitrate (10 mg/L), and $C_{initial}$ the beginning concentration of 96 mg/L in December 2015 at MW-1. For these values, the number pore volumes of groundwater required to be extracted is:

$$Number\ Pore\ Volumes = -1.0 * \ln\left(\frac{10}{96}\right) = 2.26$$

The length of the plume, assumed to be from the west edge of wastewater lagoons, to MW-6 on the eastern margin, is 800 feet. The width is set at the width of the lagoons, 350 feet. If the plume thickness is set at 13.8 feet (the screen submergence in MW-5), and the effective porosity estimated at 27 percent as in Section 4.5, a pore volume (PV) of impacted groundwater is 1,043,280 cubic feet. However, within the capture zone, the plume represents only 25 percent of the water captured. Therefore, an effective volume closer to 4,000,000 cubic feet is appropriate for the analysis.

If MW-5 is pumped 11.5 gpm (1.54 ft^3/min), the cleanup time can be estimated. The total amount of groundwater that needs to be pumped is:

$$Total\ Volume = 2.26\ PV * 4{,}000{,}000\ \frac{ft^3}{PV} = 9{,}040{,}000\ ft^3$$

And if pumping a continuous 1.54 ft^3/min, the cleanup time is:

$$Cleanup\ Time = \frac{9{,}040{,}000\ ft^3}{1.54\ \frac{ft^3}{min}} = 5{,}870{,}130\ \text{min} = 11\ years$$

This cleanup time, however, does not factor the natural decay that is observed at the site. The half-life for nitrate presented in the Final Site Investigation Report (EA 2018) based on trends observed in MW-1 and MW-3 was 7 years. Therefore, combining the pore volume flushing with natural decay, a cleanup time of 5 to 10 years is reasonable.

5.3 IRRIGATION DEMAND ANALYSIS

For the purpose irrigation design, it is assumed 2 feet of irrigation water will be provided per crop per annum, and that two crops per annum can be harvested. The amount of water produced per annum at 11.5 gpm is:

$$AFA = \left(11.5\ \frac{gal}{min}\right) * \frac{ft^3}{7.48\ gal} * \frac{1{,}440\ min}{day} * \frac{365\ day}{yr} * \frac{AFA}{43{,}560\ ft^2} = 18.5\ AFA$$

At the full capacity of 11.5 gpm, the irrigation water available is 18.5 AFA.

Calculation C-1, Appendix C provides an analysis of irrigation demand at agronomic rates for Kentucky tall fescue. Based on this analysis, the larger of the two irrigation areas (Figure 8) may be sufficient for irrigation. The smaller irrigation area is available as contingency and can be built out as required. Calculation C-1 also checks agronomic demand of nitrogen by fescue to ensure application is at agronomic rates. The analysis shows the proposed plan is adequate to reuse the pumped water. The eastern existing wastewater impoundment will be used for storage and evaporation. Irrigation will be with impact sprinklers and centrifugal pump (Appendix D).

5.4 PUMP DESIGN

The irrigation system will be operated by pumping groundwater from MW-5 with a submersible pump into the east wastewater lagoon located on Lot 4 of the proposed replat. The former wastewater lagoon will provide storage (estimated 1,800,000 gallons) and allow continuous pumping of MW-5. Water will be suction lifted from the lagoon with a high-head centrifugal pump which will convey water to high capacity impact sprinklers via conveyance lines laid to the irrigated land. The sprinklers will cycle with an irrigation controller. The centrifugal pump specifications are provided in Appendix D.

6.0 ACCESS AND ADMINISTRATIVE REQUIREMENTS

In order to implement this plan, Suertudo Development, LLC will require access to the Copart Well for periodic monitoring. Former McCatharn Dairy maintains adequate water rights with Office of State Engineer (OSE) to implement this abatement alternative; however, Change in Point of Diversion will be required from OSE to pump from MW-5 and MW-6 (if needed).

Finally, DP-1895 application to irrigate with the pumped groundwater has been filed and awaits approval.

7.0 MODIFICATION OF MONITORING PLAN

The monitoring regimen specified for the S1AP will be modified to facilitate implementation of the S2AP described herein.

7.1 SAMPLING FREQUENCY

Groundwater monitoring will continue as specified in Table 6. Because of the numerous data available for monitoring wells MW-1 through MW-4, the sampling regimen specifies wells which will be sampled quarterly, and those wells that will only be sampled semi-annually or annually. The contaminants exceeding WQCC standards at the site include nitrate, chloride and TDS. Sulfate is below standard in all site monitoring wells. Nonetheless, sulfate is specified for analysis at MW-3 at the downgradient margin of the lagoons where sulfate appears elevated.

7.2 LONG-TERM MONITORING PROTOCOLS

Sampling method is specified in Table 6, and includes standard hand-bailing, downhole submersible sampling pump, and tap samples on flowing wells being pumped (i.e., extraction wells or water supply wells). The method of sampling for each includes preferred and contingent methodologies.

7.2.1 Well Gauging

Prior to sampling, all monitoring wells will be gauged with a water level indicator. Wells will be gauged to the nearest 1/100 foot. Table 6 lists the wells that will be gauged.

7.2.2 Hand-Bailed Well Sampling

Monitoring wells listed in Table 6 to be sampled by hand bailing will be sampled as follows. Wells will be sampled from historically clean to dirty to minimize the potential for cross-contamination. New, disposable polyethylene bailers and disposable twine will be used at each well. All other equipment (e.g., field meters, water level indicator) will be decontaminated between wells to further ensure sample quality.

Field parameters will be measured with a water quality meter. Specific conductance (SpC), pH, and temperature will be monitored. All meters will be calibrated and/or checked against a standard in accordance with manufacturers' specifications prior to use.

Wells will be bailed a minimum of three casing volumes prior to sample collection when practicable. Purge water will be ground discharged. EA staff will log purge start time, volume purged, and all field parameters on standardized forms during the purge process, with a minimum of three parameters collected, if practicable. Once purging is complete, field parameters will be measured once more prior to sampling.

7.2.3 Submersible Pump Well Sampling

Groundwater monitor wells listed in Table 6 may be sampled with a submersible sampling pump (e.g., Monsoon Pump) if they can be accessed by vehicle. Field parameters will be measured from the discharge water with a water quality meter. Specific conductance, pH, and temperature during the three-casing-volume purge. Meters will be calibrated and/or checked against a standard in accordance with manufacturers' specifications prior to use.

7.2.4 Extraction Well and Water Supply Well Sampling

Tap samples will be collected from the MW-5 and perhaps MW-6, and the Copart Well as listed in Table 6 and sampled for nitrate, chloride and TDS as shown on Table 6. Tap water samples will be collected by allowing the tap to run for approximately 20 minutes and then filling the sample container directly from the tap. Field parameters will be collected immediately prior to sampling.

7.2.5 Sample Handling

Samples will be place in containers as specified in Table 5 and placed immediately on ice awaiting delivery the laboratory. A chain of custody will be completed prior to leaving the site, and the samples will be hand carried to Hall Environmental Analysis Laboratory (HEAL) in Albuquerque. Samples will be delivered at appropriate temperature and custody seal. HEAL will analyze samples within holding times specified on Table 5.

7.2.6 Decontamination and Purge Water

Gloves and pump tubing are one-time-use and disposable. Field meters, the flow through cell, the water level indicator, the turbidimeter glassware, and the pump will be decontaminated between wells to further ensure sample quality. Equipment will be washed in a potable water/Alconox® solution followed by potable water rinse.

8.0 REPORTING AND PERFORMANCE ASSESSMENT

This section provides a summary of reporting requirements and annual performance assessment of the preferred abatement option.

8.1 SEMI-ANNUAL MONITORING AND REPORTING

Semi-annual groundwater monitoring will be performed as discussed in Section 4.0 and Table 6. All wells will be gauged semi-annually so that accurate potentiometric surface maps can be prepared.

8.2 ANNUAL REPORTING AND PERFORMANCE ASSESSMENT

Performance assessment will be reported annually. The performance assessment report will include the semi-annual data, and the following:

- Updated trend plots;
- Evaluation of whether total mass of nitrate is declining over time;
- Evaluation of trends and protectiveness at wells located at the margins of the APA;
- General discussion of whether the plan is achieving target cleanup goals through evaluation of declining trends and estimation of cleanup times;
- Demonstrate the S2AP is performing according to expectations. This will be principally measured by:
    - Declining nitrate concentration in Copart Well and MW-6 in downgradient sense;
    - Decline in source strength (MW-3) nitrate concentrations;

8.3 CONTINGENCY MEASURES

If it appears that additional pumping stress is necessary for capture, MW-6 can be fitted with a submersible pump so it can pumped.

9.0 MAINTENANCE ACTIVITIES POST TERMINATION OF ABATEMENT

Once the Stage 2 Abatement activities have concluded (including successful LTM), DP-585 will be closed out, the eastern wastewater lagoon will be removed, and all site monitoring wells will be plugged and abandoned. The irrigation system will be dismantled and conveyance lines removed.

10.0 SCHEDULE

Key deliverables and activities for implementing this Stage 2 Abatement Plan are provided in the schedule shown as Figure 10. The schedule provides abatement and reporting activities for five years.

11.0 PUBLIC NOTIFICATION

Within 30 days of submittal of this Stage 2 Abatement Plan, EA, on behalf of Suertudo Development, LLC, EA will submit proof to NMED that all applicable provisions of the public notice requirements of NMAC 20.6.2.4108. B NMAC, have been met. This includes the following:

1. Publication of a notice in a newspaper of general circulation in the area of the site (Albuquerque Journal). The notice will be in English and Spanish.

2. The notice will be mailed to persons who have requested notifications as identified by NMED.

3. The notice will be mailed to a bilingual radio station (KANW) serving the Albuquerque area with a request that it be aired as a public service announcement.

4. Notification will been sent by certified mail to the New Mexico Office of the Natural Resources Trustee and the local state, and federal government as identified by NMED.

5. Notification will be provided by mailing the written notice to owners and residents of surface property located within one (1) mile of the perimeter of the sites where ground water standards are exceeded. The notification will be in English and Spanish.

6. Notification by mail to the Governor or President of each Indian Tribe, Pueblo or Nation within the state of New Mexico.

Public notice plan for the Site for approval from the NMED GWQB and written notices are provided in Appendix E.

12.0 REFERENCES

Domenico, P.A. and F.W. Schwartz, 1990. *Physical and Chemical Hydrogeology*, John Wiley & Sons, New York.

Driscoll, F.G., 1986. Groundwater and Wells. Second Edition, Johnson Division, St. Paul, Minnesota.

EA Engineering, Science, and Technology, Inc., PBC. (EA). 2018. Final Site Investigation Report, Former McCatharn Dairy Discharge Plan 585, Bernalillo County, New Mexico. August 24.

Hudak, P.F. 1994. Effective Porosity of Unconsolidated Sand; Estimation and Impact on Capture Zone Analysis. Environmental Geology, Vol. 24, Issue 2. March. pp. 140-143.

Innovative Explorations, 1998. Subsurface Soil and Groundwater Investigation: McCatharn & Son Dairy, NM State Road 47, Albuquerque, NM. November.

New Mexico Environment Department. 2017. Risk Assessment Guidance for Site Investigations and Remediation. March.

Todd, David Keith. 1980. Groundwater Hydrology, 2nd Edition, Wiley Publishing. 1980.

United States Environmental Protection Agency (EPA). 1997. Design Guidelines for Conventional Pump and Treat Systems. Ground Water Issue, Office of Solid Waste and Emergency Response EPA/540/S-97/504. September.

USEPA, 1999. Use of Monitored Natural Attenuation at Superfund, RCRA Corrective Action, and Underground Storage Tank Sites, Office of Solid Waste and Emergency Response Directive Number 9200.4-17P. April 21.

U.S. Geological Service. 2002. Groundwater Resources of the Middle Rio Grande Basin, USGS Water Resources Circular 1222 by Bartolino, James R. and Cole James C. http://pubs.usgs.gov/circ/2002/circ1222/.

FIGURES

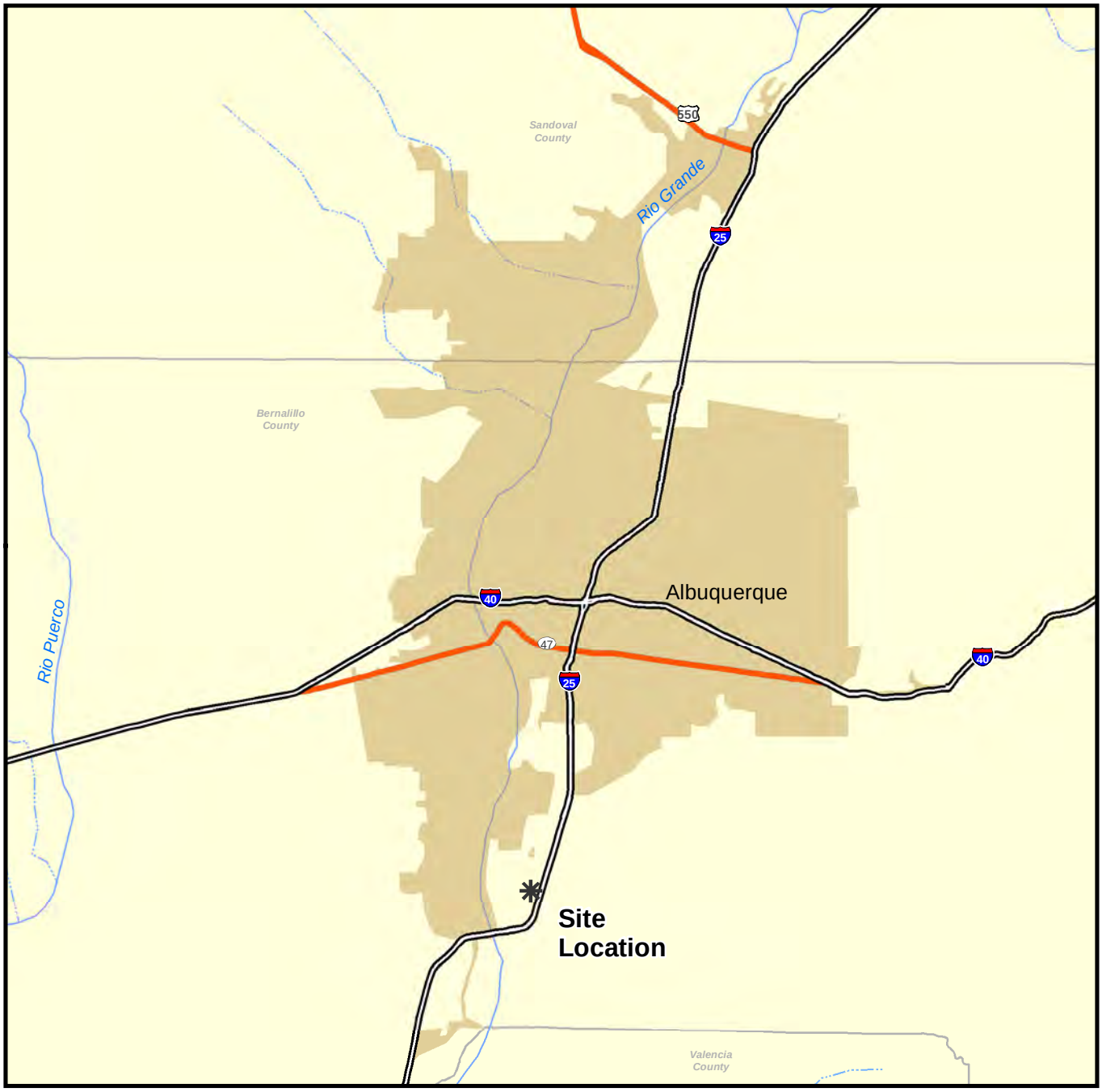

5 2.5 0 5 MILES

1:316,800 1 " EQUALS 5 MILES
SCALE
WHEN PRODUCED AT 11X17IN

N

REFERENCES
Data: ESRI 2018.
Projection: State Plane NAD 83 New Mexico Central (feet)

PROJECT

FORMER MCCATHARN DAIRY BERNALILLO COUNTY, NEW MEXICO

SITE MAP

PROJECT No. 1464103.0006			
DESIGN	NA		SCALE AS SHOWN REV 0
GIS	RM		FIGURE 1
CHECK			
REVIEW			

2018-07-17 P:\gis\Projects\McCatharn Dairy\MXDs\Fig01_Site_vertical.mxd EA-Albuquerque rmullen

LEGEND:

- Soil Boring
- Monitoring Well
- Private Water Supply Well
- Property Boundary

300 150 0 300 FEET

SCALE 1:3,600 1 " = 300 FT
WHEN PRODUCED AT 11X17IN

N

REFERENCES

Aerial Photography: Google Earth January 2013.
Projection: State Plane NAD 83 New Mexico Central (feet)

PROJECT

FORMER MCCATHARN DAIRY
BERNALILLO COUNTY, NEW MEXICO

TITLE

SITE MAP WITH PROCESS AREAS

PROJECT No. 1464103			
DESIGN	NA	SCALE AS SHOWN	REV 0
GIS	RMM	FIGURE 2	
CHECK			
REVIEW			

2018 -07-30 P:\gis\Projects\McCatharn Dairy\MXDs\Fig02_McCatharnDairy_Site Map.mxd EA-Albuquerque Sbusby

LEGEND:

- Monitoring Well
- Private Water Supply Well
- Potentiometric Contour
- Potentiometric Contour (Assumed)
- Direction of Groundwater Flow
- Property Boundary

NOTES:
Water levels measured on 11 December 2015.
Elevations are displayed in feet above mean sea level.
NM - Not measured

300 0 300 FEET

SCALE 1:3,600 1 " = 300 FT
WHEN PRODUCED AT 11X17IN

N

REFERENCES
Aerial Photography: Google Earth January 2013.
Projection: State Plane NAD 83 New Mexico Central (feet)

PROJECT
FORMER MCCATHARN DAIRY
BERNALILLO COUNTY, NEW MEXICO

TITLE
POTENTIOMETRIC SURFACE MAP-DECEMBER 2015

PROJECT No. 1464103			
DESIGN	NA	SCALE AS SHOWN	REV 0
GIS	RMM	FIGURE 3	
CHECK			
REVIEW			

2018 -07-30 P:\gis\Projects\McCatharn Dairy\MXDs\Fig03_Potentiometric_2015.mxd EA-Albuquerque Sbusby

LEGEND:

- Monitoring Well
- Private Water Supply Well
- Potentiometric Contour
- Potentiometric Contour (Assumed)
- Direction of Groundwater Flow
- Property Boundary

NOTES:
Water levels measured on 19 June 2018.
Elevations are displayed in feet above mean sea level.
NM - Not measured

300 0 300 FEET

SCALE 1:3,600 1 " = 300 FT
WHEN PRODUCED AT 11X17IN

N

REFERENCES
Aerial Photography: Google Earth January 2013.
Projection: State Plane NAD 83 New Mexico Central (feet)

PROJECT
FORMER MCCATHARN DAIRY
BERNALILLO COUNTY, NEW MEXICO

TITLE
POTENTIOMETRIC SURFACE MAP-JUNE 2018

PROJECT No. 1464103			
DESIGN	NA	SCALE AS SHOWN	REV 0
GIS	RMM	FIGURE 4	
CHECK			
REVIEW			

2018-07-30 P:\gis\Projects\McCatharn Dairy\MXDs\Fig04_Potentiometric_2018.mxd EA-Albuquerque Sbusby

LEGEND:

- Monitoring Well
- Private Water Supply Well
- Property Boundary

NOTES:
Samples collected in 11 December 2015.
Cl - Chloride
NA - Not analyzed
NO_3 - Nitrate
NS - Not sampled
TDS - Total dissolved solids

200 0 200 FEET

SCALE 1:2,400 1 " = 200 FT
WHEN PRODUCED AT 11X17IN

N

REFERENCES
Aerial Photography: Google Earth January 2013.
Projection: State Plane NAD 83 New Mexico Central (feet)

PROJECT
FORMER MCCATHARN DAIRY
BERNALILLO COUNTY, NEW MEXICO

TITLE
GROUNDWATER IMPACTS - DECEMBER 2015

PROJECT No. 1464103			
DESIGN	NA	SCALE AS SHOWN	REV 0
GIS	RMM	FIGURE 5	
CHECK			
REVIEW			

2018 -07-30 P:\gis\Projects\McCathern Dairy\MXDs\Fig05_Analytes_2015.mxd EA-Albuquerque Sbusby

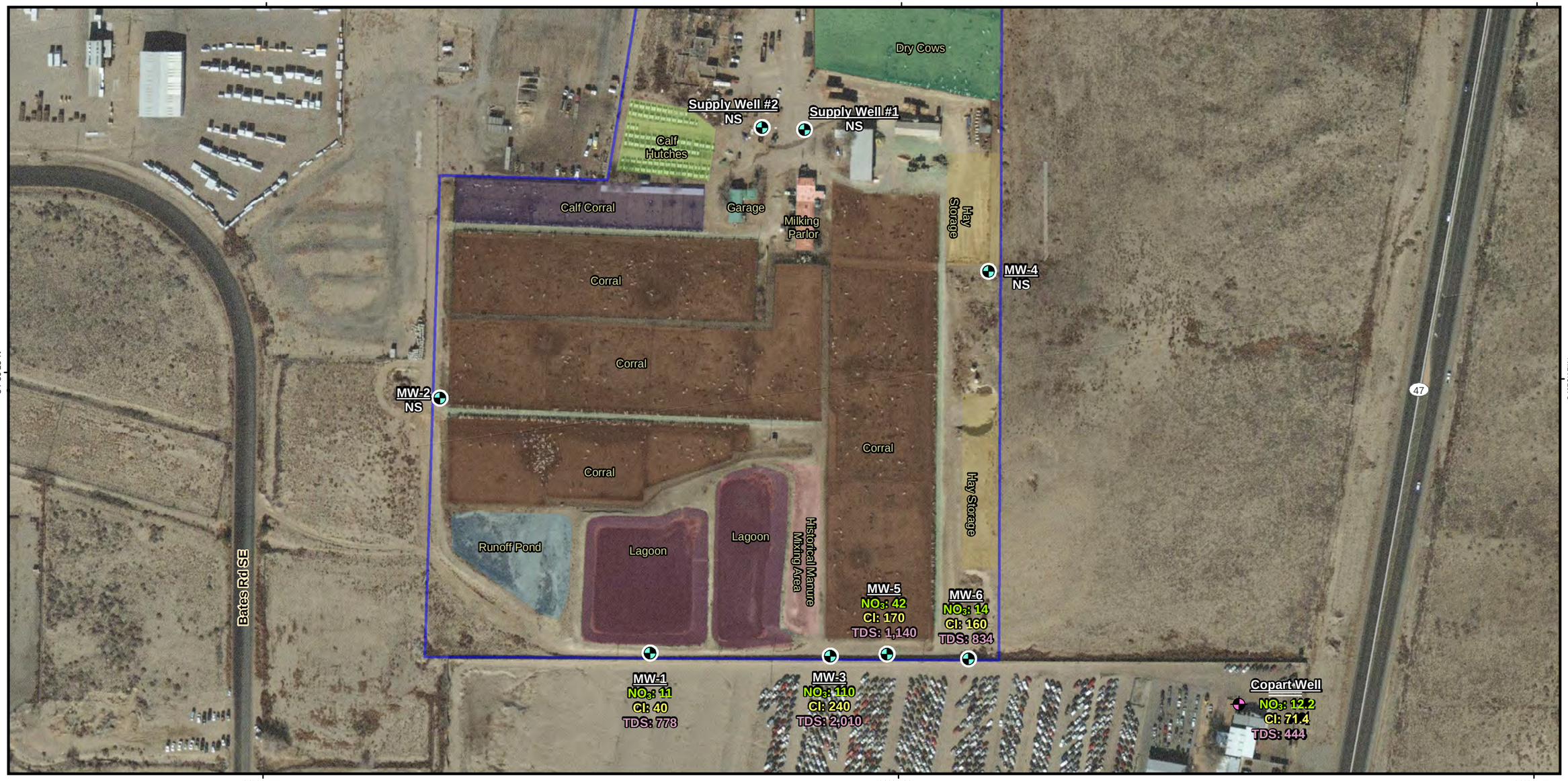

LEGEND:

Monitoring Well

Property Boundary

NOTES:
Copart Well sampled 16 April 2018
McCatharn wells sampled 19 June 2018.
Cl - Chloride
NO_3 - Nitrate
NS - Not sampled
TDS - Total dissolved solids

200 0 200 FEET

SCALE 1:2,400 1 " = 200 FT
WHEN PRODUCED AT 11X17IN

N

REFERENCES
Aerial Photography: Google Earth January 2013.
Projection: State Plane NAD 83 New Mexico Central (feet)

PROJECT
FORMER MCCATHARN DAIRY
BERNALILLO COUNTY, NEW MEXICO

TITLE
GROUNDWATER IMPACTS - JUNE 2018

PROJECT No. 1464103			
DESIGN	NA	SCALE AS SHOWN	REV 0
GIS	RMM	FIGURE 6	
CHECK			
REVIEW			

2018 -07-17 P:\gis\Projects\McCatharn Dairy\MXDs\Fig06_Analytes_2018.mxd EA-Albuquerque rmullen

LEGEND:

- Monitoring Well
- Private Water Supply Well
- Irrigation Area
- Proposed Lot Boundary

300 150 0 300 FEET

SCALE 1:3,600 1 " = 300 FT
WHEN PRODUCED AT 11X17IN

N

REFERENCES

Aerial Photography: Google Earth January 2013.
Projection: State Plane NAD 83 New Mexico Central (feet)

PROJECT

FORMER MCCATHARN DAIRY
ALBUQUERQUE, NEW MEXICO

TITLE

PROPOSED LOT BOUNDARIES AND IRRIGATION AREA

PROJECT No. 1464103			
DESIGN	NA	SCALE AS SHOWN	REV 0
GIS	RMM		
CHECK			
REVIEW			

FIGURE 7

2019 -02-22 P:\gis\Projects\McCatharn Dairy\MXDs\2019_01_S2AP\Figure 07 McCatharnDairy_ProposedLots.mxd EA-Albuquerque rmullen

LEGEND:

- Sprinkler
- Monitoring Well
- Pond
- Irrigation Area
- Proposed Lot Boundary

SPRINKLERS:

1,8	Rainbird 85EHD 1/2" Nozzle or Equivalent
2-7	Rainbird 85EHD 11/16" Nozzle or Equivalent
10-16	Rainbird 14070H 9/32" Nozzle or Equivalent
9,17	Rainbird 2045PJ 3/16" Nozzle or Equivalent

120 60 0 120 FEET

SCALE 1:1,440 1 " = 120 FT
WHEN PRODUCED AT 11X17IN

N

REFERENCES

Aerial Photography: Google Earth January 2013.
Projection: State Plane NAD 83 New Mexico Central (feet)

PROJECT

FORMER MCCATHARN DAIRY
ALBUQUERQUE, NEW MEXICO

TITLE

PREFERRED ABATEMENT OPTION - PLAN VIEW

PROJECT No. 1464103			
DESIGN	NA	SCALE AS SHOWN	REV 0
GIS	RMM	FIGURE 8	
CHECK			
REVIEW			

2019 -08-21 P:\gis\Projects\McCatharn Dairy\MXDs\2019_01_S2AP\Figure 08 McCatharnDairy_ProposedLots2.mxd EA-Albuquerque rmullen

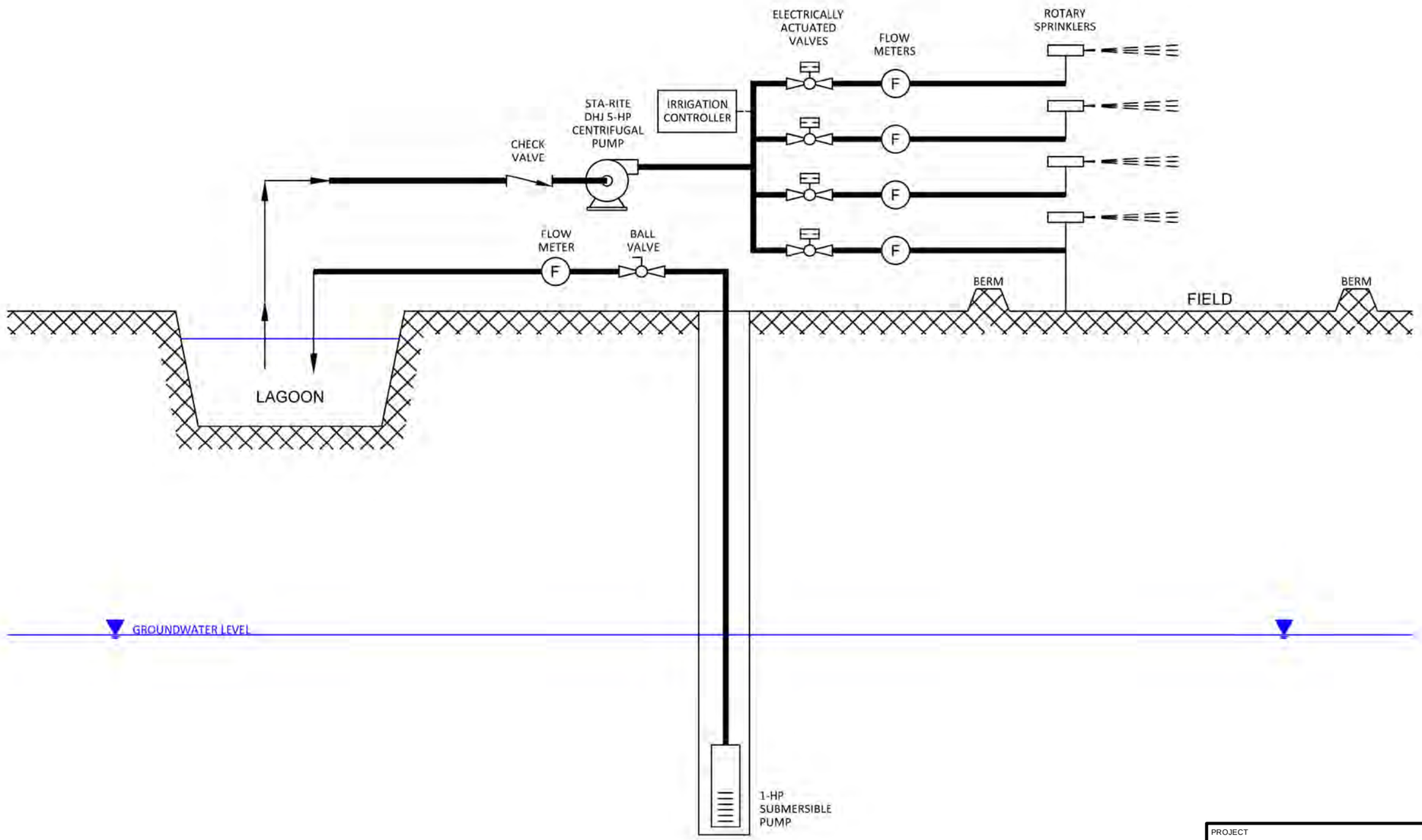

PROJECT

FORMER MCCATHARN DAIRY
ALBUQUERQUE, NEW MEXICO

TITLE

PROCESS FLOW DIAGRAM

PROJECT No. 1464103			
DESIGN	NA	SCALE AS SHOWN	REV 0
GIS	RMM	FIGURE 9	
CHECK			
REVIEW			

2019 -08-22 P:\Projects\McCatham Dairy\MXDs\2019_01_S2AP\Figure 09 Process Flow Diagram - Stage 2 Abatement Plan_R2.mxd EA-Albuquerque ecarpio

FIGURE 10
STAGE 2 ABATEMENT PLAN IMPLEMENTATION SCHEDULE
FORMER McCATHARN DAIRY, ALBUQUERQUE, NEW MEXICO

	2019				2020				2021				2022				2023				2024			
Activity	**Q1**	**Q2**	**Q3**	**Q4**	**Q1**	**Q2**	**Q3**	**Q4**	**Q1**	**Q2**	**Q3**	**Q4**	**Q1**	**Q2**	**Q3**	**Q4**	**Q1**	**Q2**	**Q3**	**Q4**	**Q1**	**Q2**	**Q3**	**Q4**
Submit S2AP			23-Aug																					
Apply for Discharge Plan		24-May																						
Partial Closures Lots 1, 2, 3 and 5				1-Dec																				
Long-term pumping test			27-Jul																					
Implement Stage 2 Abatement Plan				15-Dec																				
Stage 2 Abatement Plan Approved				15-Nov																				
OSE Order in Place					1-Feb																			
Semi-Annual Monitoring Report						1-Jul		1-Dec		1-Jul		1-Dec		1-Jul		1-Dec		1-Jul		1-Dec		1-Jul		1-Dec
Performance Assessment Reporting [1]								1-Dec				1-Dec				1-Dec				1-Dec				1-Dec

Notes:
Groundwater Monitoring Activities
Assessment Activitities
Administrative/Planning Document Activity
S2AP Implementation Activity
Reporting and Performance Assessment Activity
[1]This assessment report will be included with semi-annual report and submitted approximately three months after sampling event
AP = Abatement Plan
PRB = Permeable Reactive Barrier
LTM = Long-Term Monitoring
MNA = Monitored Natural Attenuation
OSE - Office of the State Engineer
RDC = Reductive Dechlorination

TABLES

Table 1. Well Contruction Details
Former McCatharn Dairy, Albuquerque, New Mexico

Well	Date Installed	Northing[1]	Easting[1]	Casing Diameter (inches)	Top of Casing (feet amsl)	Total Depth (feet bgs)	Screen Interval (feet bgs)
Monitoring Wells							
MW-1	8/1/1988	1450859.91	377496 .16	2	4984.65	86	76 - 86
MW-2	9/1/1998	1451253.37	377086.62	4	4970.62	70	50 - 70
MW-3	9/2/1998	1450878.75	377881.98	4	4996.15	82	62 -82
MW-4	2/13/2007	1451582.38	378161.93	2	5011.12	120	100 - 120
MW-5	3/6/2015	1450870.19	377958.49	4	4998.26	108	88 - 108
MW-6	3/6/2015	1450857.90	378121.77	4	5004.40	115	95 - 115
Supply Wells							
Supply Well #1	1/24/1960	-	-	7	-	184	162 - 182
Supply Well #2	3/22/1989	-	-	6.5	-	274	190 - 270

NOTES:
[1] = NM State Plane Coordinates (NAD 27/ NAVD 88)
amsl = above mean sea level
bgs = below ground surface
Highlighted cells indicate suspect data due to conflicting historical information
NA = not applicable

Table 2. Summary of Monitoring Well Fluid Gauging Data
Former McCatharn Dairy, Albuquerque, New Mexico

Monitor Well	Date Measured	Northing[1]	Easting[1]	Top of Casing[2]	Depth to Water[3]	Groundwater Elevation[2]
MW-1	6/19/2018	1450859.91	377496.16	4984.65	79.21	4905.44
	12/20/2017				79.01	4905.64
	10/5/2017				79.01	4905.64
	6/7/2017				79.01	4905.64
	3/16/2017				79.35	4905.30
	12/5/2016				78.82	4905.83
	9/20/2016				78.96	4905.69
	6/1/2016				79.49	4905.16
	12/11/2015				79.13	4905.52
	6/24/2015				79.46	4905.19
	11/13/2014				79.41	4905.24
	5/19/2014				79.62	4905.03
	12/9/2013				79.45	4905.20
	9/30/2013				79.42	4905.23
	6/19/2013				79.85	4904.80
	3/26/2013				80.25	4904.40
	12/26/2012				79.78	4904.87
	9/18/2012				79.44	4905.21
	6/19/2012				79.71	4904.94
	3/27/2012				79.61	4905.04
	11/15/2011				79.42	4905.23
	9/13/2011				79.30	4905.35
	6/29/2011				79.47	4905.18
	3/15/2011				80.08	4904.57
	12/14/2010				79.40	4905.25
	9/14/2010				79.30	4905.35
	6/22/2010				79.55	4905.10
	3/16/2010				79.97	4904.68
	12/22/2009				78.53	4906.12
	9/15/2009				79.31	4905.34
	6/15/2009				79.46	4905.19
	3/17/2009				78.74	4905.91
	12/22/2008				79.21	4905.44
	6/17/2008				79.23	4905.42
	3/11/2008				79.00	4905.65
	12/12/2007				77.90	4906.75
	9/5/2007				77.20	4907.45
	6/12/2007				79.50	4905.15
	3/14/2007				79.80	4904.85
	12/5/2006				78.76	4905.95
	9/26/2006				78.70	4905.95
	6/13/2006				78.50	4906.15
	3/20/2006				78.70	4905.95
	12/13/2005				78.50	4906.15
	9/14/2005				78.30	4906.35
	6/22/2005				78.70	4905.95
	3/16/2005				78.20	4906.45
	12/7/2004				78.80	4905.85
	8/17/2004				78.20	4906.45
	6/2/2004				78.20	4906.45
	3/17/2004				78.70	4905.95
	11/12/2003				78.20	4906.45
	9/10/2003				78.10	4906.55
	5/27/2003				78.20	4906.45
	3/19/2003				78.10	4906.55
	12/10/2002				78.00	4906.65
	9/30/2002				78.10	4906.55
	5/30/2002				78.40	4906.25
	3/4/2002				78.20	4906.45
	11/27/2001				77.70	4906.95
	9/5/2001				78.10	4906.55
	5/30/2001				78.20	4906.45
	2/27/2001				78.40	4906.25
	11/3/2000				77.79	4906.86
	8/25/2000				77.88	4906.77
	5/3/2000				78.20	4906.45
	2/29/2000				78.54	4906.11
	11/16/1999				78.57	4906.08
	8/27/1999				80.00	4904.65
	8/12/1999				77.60	4907.05

Table 2. Summary of Monitoring Well Fluid Gauging Data
Former McCatharn Dairy, Albuquerque, New Mexico

Monitor Well	Date Measured	Northing[1]	Easting[1]	Top of Casing[2]	Depth to Water[3]	Groundwater Elevation[2]
MW-2	6/19/2018	1451253.37	377086.62	4970.62	64.36	4906.26
	12/20/2017				64.21	4906.41
	10/5/2017				64.21	4906.41
	6/7/2017				64.16	4906.46
	3/16/2017				64.55	4906.07
	12/5/2016				64.04	4906.58
	9/20/2016				64.07	4906.55
	6/1/2016				64.62	4906.00
	12/11/2015				64.38	4906.24
	6/24/2015				64.66	4905.96
	11/13/2014				64.62	4906.00
	5/19/2014				64 .76	4905.86
	12/9/2013				64.66	4905.96
	9/30/2013				64 .63	4905.99
	6/19/2013				65.10	4905.52
	3/26/2013				65 .5	4905.12
	12/26/2012				65.01	4905.61
	9/18/2012				64 .06	4906.56
	6/19/2012				64.09	4906.53
	3/27/2012				64.80	4905.82
	11/15/2011				64.63	4905.99
	9/13/2011				64.46	4906.16
	6/29/2011				64.59	4906.03
	3/15/2011				66.33	4904.29
	12/14/2010				64.71	4905.91
	9/14/2010				64.48	4906.14
	6/22/2010				64.67	4905.95
	3/16/2010				65.19	4905.43
	12/22/2009				64.73	4905.89
	9/15/2009				63.56	4907.06
	6/15/2009				63.44	4907.18
	3/17/2009				64.43	4906.19
	12/22/2008				64.42	4906.20
	8/20/2008				64.37	4906.25
	3/11/2008				64.00	4906.62
	12/12/2007				64.60	4906.02
	9/5/2007				63.70	4906.92
	6/12/2007				64.80	4905.82
	3/14/2007				64.40	4906.22
	12/5/2006				63.62	4906.42
	9/26/2006				64.20	4906.42
	6/13/2006				65.00	4905.62
	3/20/2006				63.20	4907.42
	12/13/2005				63.30	4907.32
	9/14/2005				63.50	4907.12
	6/22/2005				64.20	4906.42
	3/16/2005				63.30	4907.32
	12/7/2004				64.00	4906.62
	8/17/2004				63 .3	4907.32
	6/2/2004				63.30	4907.32
	3/17/2004				63.40	4907.22
	11/12/2003				63.10	4907.52
	9/10/2003				63.40	4907.22
	5/27/2003				63.10	4907.52
	3/19/2003				64.20	4906.42
	12/10/2002				63.40	4907.22
	9/30/2002				64.20	4906.42
	5/30/2002				65.10	4905.52
	3/4/2002				64.10	4906.52
	11/27/2001				63.40	4907.22
	9/5/2001				63.40	4907.22
	5/30/2001				63.70	4906.92
	2/27/2001				63 .8	4906.82
	11/3/2000				62.69	4907.93
	8/25/2000				63.00	4907.62
	5/31/2000				63.50	4907.12
	2/29/2000				63.88	4906.74
	11/16/1999				63.52	4907.10
	8/27/1999				58.50	4912.12

Table 2. Summary of Monitoring Well Fluid Gauging Data
Former McCatharn Dairy, Albuquerque, New Mexico

Monitor Well	Date Measured	Northing[1]	Easting[1]	Top of Casing[2]	Depth to Water[3]	Groundwater Elevation[2]
MW-3	6/19/2018	1450878.75	377881.98	4996.15	91.01	4905.14
	12/20/2017				90.68	4905.47
	10/10/2017				90.81	4905.34
	6/7/2017				90.82	4905.33
	3/16/2017				91.05	4905.10
	12/5/2016				90.65	4905.50
	9/20/2016				90.88	4905.27
	6/1/2016				91.32	4904.83
	12/11/2015				90.98	4905.17
	6/24/2015				91.36	4904.79
	11/13/2014				91.20	4904.95
	5/19/2014				91.52	4904.63
	12/9/2013				91.29	4904.86
	9/30/2013				91.32	4904.83
	6/19/2013				91.97	4904.18
	3/26/2013				92.13	4904.02
	12/26/2012				91.66	4904.49
	9/18/2012				91.44	4904.71
	6/19/2012				91.71	4904.44
	3/27/2012				91.57	4904.58
	11/15/2011				91.38	4904.77
	9/13/2011				91.30	4904.85
	6/29/2011				91.51	4904.64
	3/15/2011				91.94	4904.21
	12/14/2010				91.32	4904.83
	9/14/2010				91.35	4904.80
	6/22/2010				91.57	4904.58
	3/16/2010				91.86	4904.29
	12/22/2009				89.43	4906.72
	9/15/2009				90.73	4905.42
	6/15/2009				91.63	4904.52
	3/17/2009				91.13	4905.02
	12/22/2008				91.64	4904.51
	8/20/2008				91.29	4904.86
	3/11/2008				91.00	4905.15
	12/12/2007				90.50	4905.65
	9/5/2007				89.10	4907.05
	6/12/2007				91.30	4904.85
	3/14/2007				91.20	4904.95
	12/5/2006				90.84	4906.05
	9/26/2006				90.10	4906.05
	6/13/2006				89.30	4906.85
	3/20/2006				90.60	4905.55
	12/13/2005				90.90	4905.25
	9/14/2005				91.10	4905.05
	6/22/2005				90.20	4905.95
	3/16/2005				89.20	4906.95
	12/7/2004				90.70	4905.45
	8/17/2004				89.20	4906.95
	6/2/2004				90.20	4905.95
	3/17/2004				90.60	4905.55
	11/12/2003				90.10	4906.05
	9/10/2003				89.10	4907.05
	5/27/2003				88.70	4907.45
	3/19/2003				91.00	4905.15
	12/10/2002				90.10	4906.05
	9/30/2002				91.00	4905.15
	5/30/2002				90.20	4905.95
	3/4/2002				89.20	4906.95
	11/27/2001				89.50	4906.65
	9/5/2001				89.30	4906.85
	5/30/2001				90.40	4905.75
	2/27/2001				90.10	4906.05
	11/3/2000				90.36	4905.79
	8/25/2000				89.60	4906.55
	5/31/2000				90.10	4906.05
	2/29/2000				90.94	4905.21
	11/16/1999				91.27	4904.88
	8/27/1999				90.50	4905.65

Table 2. Summary of Monitoring Well Fluid Gauging Data
Former McCatharn Dairy, Albuquerque, New Mexico

Monitor Well	Date Measured	Northing[1]	Easting[1]	Top of Casing[2]	Depth to Water[3]	Groundwater Elevation[2]
MW-4	6/19/2018	1451582.38	378161.93	5011.12	106.11	4905.01
	12/20/2017				105.86	4905.26
	10/10/2017				110.00	4901.12
	6/7/2017				105.96	4905.16
	3/16/2017				106.12	4905.00
	12/5/2016				105.82	4905.30
	9/20/2016				106.08	4905.04
	6/1/2016				106.50	4904.62
	12/11/2015				106.13	4904.99
	6/24/2015				106.55	4904.57
	11/13/2014				106.46	4904.66
	5/19/2014				106.71	4904.41
	12/9/2013				106.40	4904.72
	9/30/2013				106.52	4904.60
	6/19/2013				106.96	4904.16
	3/26/2013				107.36	4903.76
	12/26/2012				106.89	4904.23
	9/18/2012				106.70	4904.42
	6/19/2012				107.00	4904.12
	3/27/2012				106.85	4904.27
	11/15/2011				106.66	4904.46
	9/13/2011				106.70	4904.42
	6/29/2011				106.87	4904.25
	3/15/2011				107.14	4903.98
	12/14/2010				106.60	4904.52
	9/14/2010				106.66	4904.46
	6/22/2010				106.86	4904.26
	3/16/2010				107.02	4904.10
	12/22/2009				106.24	4904.88
	9/15/2009				106.13	4904.99
	6/15/2009				109.73	4901.39
	3/17/2009				106.42	4904.70
	12/22/2008				106.23	4904.89
	8/20/2008				106.60	4904.52
	3/11/2008				104.00	4907.12
	12/12/2007				105.14	4905.98
	9/5/2007				106.50	4904.62
	6/12/2007				107.30	4903.82
	3/14/2007				106.55	4904.57
MW-5	6/19/2018	1450870.19	377958.49	4998.26	93.18	4905.08
	12/20/2017				92.88	4905.38
	10/10/2017				93.02	4905.24
	6/7/2017				93.00	4905.26
	3/16/2017				93.22	4905.04
	12/5/2016				92.81	4905.45
	9/20/2016				93.05	4905.21
	6/1/2016				93.54	4904.72
	12/11/2015				93.12	4905.14
	6/24/2015				93.52	4904.74
MW-6	6/19/2018	1450857.90	378121.77	5004.40	99.45	4904.95
	12/20/2017				99.11	4905.29
	10/10/2017				99.27	4905.13
	6/7/2017				99.25	4905.15
	3/16/2017				99.45	4904.95
	12/5/2016				99.09	4905.31
	9/20/2016				99.31	4905.09
	6/1/2016				99.79	4904.61
	12/11/2015				99.39	4905.01
	6/24/2015				99.74	4904.66

NOTES:
[1] = Horizontal control to NM State Plane Coordinates Central NAD27 Grid Coordinates (in feet)
[2] = Vertical Control to NAVD88 Datum in feet above mean sea level
[3] = Measured in feet below the top of casing at survey point on north side of well
NA = not applicable

Table 3. Hydraulic Analysis of MW-5 Well Capacity Test
Former McCatharn Dairy, Albuquerque, New Mexico

Clent: INEX Well No.: MW-5 Well Depth: 108.5 feet
Job No.: 759 Meas. Pt.: TOC Aquifer Thickness (b): 13.8 feet
Static Water Level: 94.69

Date	Clock Time	Elapsed Time	Water Level	Q	s	Q/s (gal/min/ft)	T (gal/ft/day)	T (ft^2/day)	K (ft/day)	Remarks
3/9/2015	10:30	prepump	94.69	prepump		n/a				
3/9/2015	10:35	0				n/a				Start Pump
3/9/2015	10:45	10	101.08	11.5	6.39	1.80	2700	361	26	Test pump was a 1/2 HP 13 gpm submersible set on 105' of 1" galvanized pipe
3/9/2015	11:00	25	101.08	11.5	6.39	1.80	2700	361	26	
3/9/2015	11:15	40	101.08	11.5	6.39	1.80	2700	361	26	
3/9/2015	11:30	55	100.92	11.5	6.23	1.85	2769	370	27	
3/9/2015	11:45	70	100.83	11.5	6.14	1.87	2809	376	27	
3/9/2015	12:00	85	100.75	11.5	6.06	1.90	2847	381	28	
3/9/2015	12:15	100	100.79	11.5	6.1	1.89	2828	378	27	
3/9/2015	12:30	115	100.71	11.5	6.02	1.91	2865	383	28	
3/9/2015	12:45	130	100.71	11.5	6.02	1.91	2865	383	28	
3/9/2015	13:00	145	100.71	11.5	6.02	1.91	2865	383	28	
3/9/2015	13:15	160	100.71	11.5	6.02	1.91	2865	383	28	
3/9/2015	13:30	175	100.71	11.5	6.02	1.91	2865	383	28	
3/9/2015	13:45	190	100.71	11.5	6.02	1.91	2865	383	28	
3/9/2015	14:00	205	100.71	11.5	6.02	1.91	2865	383	28	
3/9/2015	14:15	220	100.71	11.5	6.02	1.91	2865	383	28	
3/9/2015	14:30	235	100.71	11.5	6.02	1.91	2865	383	28	

NOTES:
Q = pumping rate in gallons per minute
s = drawdown in pumping well, feet
T = transmissivity = (Q/s)*1,500 (Driscoll, 1986. Groundwater and Wells, 2nd Edition. Page 1021
K = T/b = hydraulic conductivity in feet per day
Source of data: Rogers and Company well capacity test coducted March 9, 2015 on behalf of Innovative Explorations

Table 4. Summary of Groundwater Analytical Results
Former McCatharn Dairy, Albuquerque, New Mexico

Well Number	Date Sampled	Chloride (mg/L)	Nitrate (mg/L)	TDS (mg/L)	Total Kjeldahl Nitrogen (mg/L)	Sulfate (mg/L)
MW-1	6/19/2018	40	11	778	<2.0	180
	12/20/2017	48	18	948	<2.0	200
	10/5/2017	51	17	902	<2.0	200
	6/7/2017	56	20	948	<5.0	210
	3/16/2017	57	20	930	<2.0	210
	12/5/2016	70	26	1010	<5.0	230
	9/20/2016	64	24	988	<5.0	220
	6/1/2016	75	29	1070	<5.0	230
	12/11/2015	96	37	1180	ND	250
	6/24/2015	100	36	1180	ND	250
	11/13/2014	170	44	1340	ND	
	5/19/2014	150	43	1370	ND	
	9/30/2013	120	45	1400	ND	
	9/12/2013	130	46	1380	ND	
	6/19/2013	130	48	1400	ND	
	3/26/2013	160	58	1410	ND	
	12/26/2012	130	48	1300	ND	
	9/18/2012	120	42	1250	ND	
	6/19/2012	130	49	1270	ND	
	3/27/2012	150	55	1380	ND	
	11/15/2011	110	49	1190	ND	
	9/13/2011	120	44	1230	ND	
	6/29/2011	120		1270	1.5	
	3/15/2011	140	50	1400	ND	
	12/14/2010	140	47	1520	7	
	9/14/2010	130	45	1340	ND	
	6/22/2010	110	36	1160	ND	
	3/16/2010	190	69	1500	ND	
	12/22/2009	160	56	1450	ND	
	9/15/2009	140	49	1380	ND	
	6/15/2009	170	55	1400	ND	
	3/17/2009	220	78	1600	6.3	
	12/22/2008	180	65	1500	ND	
	11/3/2008	230	77	1800	ND	
	8/20/2008	160	56	1400	ND	
	6/17/2008	180	66	1500	ND	
	12/12/2007	190	69	2000	ND	
	12/6/2007	230	78	1800	ND	
	5/9/2007	180	68	1600	10	
	3/14/2007	290	99	2000	7	
	9/26/2006	190	67	1600	ND	
	6/13/2006	230	83	1800	ND	
	5/12/2006	210	84	1700	ND	
	3/20/2006	280	92	2100	ND	
	12/13/2005	240	89	1900	ND	
	9/14/2005	190	76	1700	ND	
	6/22/2005	250	91	1900	ND	
	3/16/2005	300	99	2200	ND	
	8/17/2004	240	96	1900	ND	
	7/12/2004	240	92	2000	ND	
	3/17/2004	310	120	2300	ND	
	2/6/2004	220	89	2100	ND	
	12/11/2003	260	100	2100	ND	
	10/9/2003	250	100	2000	ND	
	5/27/2003	280	110	2100	ND	
	3/19/2003	450	130	2500	ND	
	10/12/2002	290	120	2300	ND	
	9/30/2002	250	110	2100	ND	-
	5/30/2002	260	130	2600	ND	
	4/3/2002	340	130	2800	ND	
	11/27/2001	310	140	2600	1.7	
	5/30/2001	270	160	2400	1.1	
	5/9/2001	270	140	2600	ND	
	2/27/2001	290	180	2700	ND	
	8/25/2000	250	190	2460	2 .50	
	5/31/2000	260	200	2520	6	
	3/11/2000	230	150	2400	2 .20	..
	2/29/2000	290	210	2880	ND	
	11/16/1999	250	180	2360	20	
	8/27/1999	260	190	2480	ND	
	6/4/1999	370	190	2460	1.7	
	5/27/1999	270	190	2580	0.6	
	9/21/1998	240	170	2310	0.6	350
	3/20/1998		262			
	8/8/1997		202			
	4/18/1997	529	220	3180	1.1	
	12/8/1996	341		2670	0.4	
	10/24/1995		115			
	7/15/1994		117			
	4/14/1994		108			
	4/1/1994		156			
	6/10/1993		160			
	2/7/1993		130			
	2/4/1993		192			
	12/31/1992		239			
	9/30/1992		280			
	7/1/1992		273			
	1/7/1992		270			
	3/7/1991		190			
	1/14/1991		143			
	11/4/1990		135			
	7/16/1990		169			
	6/28/1990		182			
	1/31/1990		74.3			
	11/17/1989		88.7			
	3/17/1989		100			
	12/8/1988		113			

Table 4. Summary of Groundwater Analytical Results
Former McCatharn Dairy, Albuquerque, New Mexico

Well Number	Date Sampled	Chloride (mg/L)	Nitrate (mg/L)	TDS (mg/L)	Total Kjeldahl Nitrogen (mg/L)	Sulfate (mg/L)
MW-2	12/20/2017	71	2.2	462	<1.0	62
	10/5/2017	73	2.4	580	<1.0	72
	6/7/2017	76	2.4	454	<1.0	68
	3/16/2017	85	2.6	439	<1.0	62
	12/5/2016	85	3.2	441	<1.0	65
	9/20/2016	78	2.7	434	<1.0	68
	6/1/2016	76	2.5	454	<1.0	62
	12/11/2015	86	3	452	ND	67
	6/24/2015	80	2.7	472	ND	62
	11/13/2014	92	3.8	464	ND	
	5/19/2014	91	4.1	534	ND	
	12/9/2013	88	3.6	675	ND	
	9/30/2013	95	4	516	ND	
	6/19/2013	100	4.5	554	ND	
	3/26/2013	110	3.4	610	ND	
	12/26/2012	94	3.4	540	ND	
	9/18/2012	100	3.6	487	ND	
	6/19/2012	98	3.8	518	1.1	
	3/27/2012	94	3.7	528	ND	
	11/15/2011	130	5	586	ND	
	9/13/2011	99	4.2	506	ND	
	6/29/2011	96		695	ND	
	3/15/2011	120	5.7	584	ND	
	12/14/2010	110	4.8	645	ND	
	9/14/2010	110	43.4	597	ND	
	6/22/2010	130	7.8	661	ND	
	3/16/2010	220	16	969	ND	
	12/22/2009	170	11	800	ND	
	9/15/2009	150	12	819	ND	
	6/15/2009	190	14	920	ND	
	3/17/2009	240	20	1100	ND	
	12/22/2008	190	16	950	ND	
	8/20/2008	230	22	1200	ND	
	6/17/2008	280	26	1300	ND	
	3/11/2008	330	27	1700	ND	
	12/12/2007	350	35	2000	ND	
	9/5/2007	180	25	1000	ND	
	6/12/2007	130	13	900	ND	
	3/14/2007	130	15	1600	ND	
	12/5/2006	110	12	1900	ND	
	9/26/2006	150	22	2300	ND	
	9/13/2006	100	6.1	470	ND	
	3/20/2006	110	5.8	500	ND	
	12/13/2005	100	6.5	450	ND	
	9/14/2005	98	6.5	460	ND	
	6/22/2005	100	7	490	ND	
	3/16/2005	110	6.5	460	ND	
	12/7/2004	98	6.8	470	ND	
	8/17/2004	110	7.5	550	ND	
	6/2/2004	100	7.1	490	ND	
	3/17/2004	87	7.1	480	ND	
	11/12/2003	110	7.6	490	ND	
	9/10/2003	110	7.9	520	ND	
	5/27/2003	110	9.1	490	ND	
	3/19/2003	97	8.9	530	ND	
	12/10/2002	98	9.2	500	ND	
	9/30/2002	99	10	610	ND	
	5/30/2002	88	9	570	ND	
	3/4/2002	100	9.9	570	ND	
	11/27/2001	110	10	630	1.1	
	9/5/2001	110	9.9	610	ND	
	5/30/2001	110	13	570	ND	
	2/27/2001	120	13	610	ND	
	11/3/2000	110	14	570	ND	
	8/25/2000	120	15	607	ND	
	5/31/2000	140	20	630	ND	
	2/29/2000	150	17	746	ND	
	11/16/1999	140	20	629	ND	
	8/27/1999	150	20	794	ND	
	5/27/1999	220	28	913	ND	
	4/6/1999	310	36	1230	0.8	150
	9/21/1998	170	22	1030	0.6	

Table 4. Summary of Groundwater Analytical Results
Former McCatharn Dairy, Albuquerque, New Mexico

Well Number	Date Sampled	Chloride (mg/L)	Nitrate (mg/L)	TDS (mg/L)	Total Kjeldahl Nitrogen (mg/L)	Sulfate (mg/L)
MW-3	6/19/2018	240	110	2010	<5.0	480
	12/20/2017	200	110	2010	<5.0	410
	10/10/2017	190	83	1560	<5.0	290
	6/7/2017	290	120	2190	<5.0	430
	3/16/2017	230	95	2180	<5.0	430
	12/5/2016	310	120	2070	<5.0	480
	9/20/2016	290	120	2100	<5.0	470
	6/1/2016	290	110	2090	<5.0	450
	12/11/2015	220	92	2010	ND	360
	6/24/2015	210	100	2030	ND	430
	11/13/2014	220	130	2060	ND	
	5/19/2014	210	120	1990	ND	
	12/9/2013	290	170	2300	ND	
	9/30/2013	290	180	2270	ND	
	6/19/2013	260	170	2060	ND	
	3/26/2013	220	140	2140	ND	
	12/26/2012	260	170	2120	ND	
	9/18/2012	290	170	2320	ND	
	6/19/2012					
	3/27/2012	240	160	2090	ND	
	11/15/2011	250	160	2090	ND	
	9/13/2011	300	190	2350	ND	
	6/29/2011	250		2200	ND	
	3/15/2011	320	190	2380	ND	
	12/14/2010	340	200	2610	ND	
	9/14/2010	310	200	2480	ND	
	6/22/2010	300	170	2420	ND	
	3/16/2010	330	200	2470	ND	
	12/22/2009	350	190	2620	ND	
	9/15/2009	300	160	2450	ND	
	6/15/2009	370	160	2500	ND	
	3/17/2009	360	160	2500	ND	
	12/22/2008	380	170	2600	ND	
	8/20/2008	360	170	2800	ND	
	6/17/2008	370	160	2600	ND	-
	3/11/2008	360	140	2700	ND	
	12/12/2007	400	160	2800	ND	
	9/5/2007	440	170	650	13	
	6/12/2007	450	170	3000	ND	
	3/14/2007	490	200	3200	ND	
	12/5/2006	480	180	3000	ND	
	9/26/2006	540	190	3100	ND	
	6/13/2006	590	180	3300	2	
	3/20/2006	560	200	3500	ND	
	12/13/2005	540	210	3300	ND	
	9/14/2005	540	220	3500	ND	
	6/22/2005	560	220	3400	ND	
	3/16/2005	530	200	3300	ND	
	12/7/2004	460	180	3100	ND	
	8/17/2004	520	200	3200	ND	
	6/2/2004	470	190	3100	ND	
	3/17/2004	480	230	3200	ND	
	11/12/2003	340	150	2700	ND	
	9/10/2003	390	170	2600	ND	
	5/27/2003	410	210	3000	ND	
	3/19/2003	400	190	2900	ND	
	12/10/2002	370	180	2800	ND	
	9/30/2002	340	140	2400	ND	
	5/30/2002	300	140	3000	ND	
	3/4/2002	310	130	5800	ND	
	11/27/2001	290	130	2600	1 .10	
	9/5/2001	260	140	3000	ND	
	5/30/2001	250	160	2400	ND	
	2/27/2001	200	130	1900	ND	
	11/3/2000	190	99	1300	7.3	
	8/25/2000	210	120	1580	ND	
	5/31/2000	250	120	2560	1.5	
	2/29/2000	240	96	1620	ND	
	11/16/1999	250	110	2110	1.7	
	8/27/1999	220	48	1208	ND	
	5/27/1999	250	86	817	1 .1	
	4/6/1999	220	150	2390	5.9	
	9/21/1998	120	25	902	0.8	

Table 4. Summary of Groundwater Analytical Results
Former McCatharn Dairy, Albuquerque, New Mexico

Well Number	Date Sampled	Chloride (mg/L)	Nitrate (mg/L)	TDS (mg/L)	Total Kjeldahl Nitrogen (mg/L)	Sulfate (mg/L)
MW-4	12/20/2017	190	16	850	<2.0	100
	10/10/2017	140	12	816	<2.0	110
	6/7/2017	150	12	820	<2.0	140
	3/16/2017	150	11	830	<2.0	140
	12/5/2016	150	12	800	<2.0	140
	9/20/2016	150	13	796	<2.0	150
	6/1/2016	150	12	834	<2.0	140
	12/11/2015	160	14	848	ND	140
	6/24/2015	170	13	898	ND	150
	11/13/2014	160	14	810	ND	
	5/19/2014	150	13	886	ND	
	12/9/2013	150	13	1000	ND	
	9/30/2013	150	13	856	ND	
	6/19/2013	160	14	796	ND	
	3/26/2013	160	14	886	ND	
	12/26/2012	150	14	852	ND	
	9/18/2012	150	14	815	ND	
	6/19/2012	150	14	846	ND	
	3/27/2012	140	13	836	ND	
	11/15/2011	130	11	820	ND	
	9/13/2011	150	13	778	ND	
	6/29/2011	140		855	ND	
	3/15/2011	150	13	782	ND	
	12/14/2010		13		ND	
	9/14/2010	140	13	797	ND	
	6/22/2010	140	12	763	ND	
	3/16/2010	160	13	743	ND	
	12/22/2009	150	13	764	ND	
	9/15/2009	140	12	772	ND	
	6/15/2009	150	12	740	ND	
	3/17/2009	160	13	620	ND	
	12/22/2008	150	13	710	ND	
	8/20/2008	140	13	710	ND	
	6/17/2008	150	14	730	ND	
	3/11/2008	150	13	730	ND	
	12/12/2007	140	14	990	ND	
	9/5/2007	150	14	960	ND	
	6/12/2007	140	13	710	ND	
MW-5	6/19/2018	170	42	1140	<5.0	250
	12/20/2017	150	32	1050	<5.0	200
	10/10/2017	150	30	1030	<5.0	210
	6/7/2017	150	38	1170	<5.0	230
	3/16/2017	170	43	1170	<5.0	250
	12/5/2016	190	57	1400	<5.0	280
	9/20/2016	210	65	1460	<5.0	280
	6/1/2016	200	63	1450	<5.0	260
	12/11/2015	210	67	1400	ND	260
	6/24/2015	180	66	1530	ND	270
MW-6	6/19/2018	160	14	834	<2.0	150
	12/20/2017	150	15	852	<2.0	140
	10/10/2017	160	16	887	<2.0	150
	6/7/2017	150	16	907	<5.0	150
	3/16/2017	160	17	828	<2.0	150
	12/5/2016	150	14	803	<2.0	140
	9/20/2016	140	15	817	<2.0	150
	6/1/2016	140	14	841	<2.0	140
	12/11/2015	150	15	785	ND	150
	6/24/2015	140	15	862	ND	150
Copart Well[1]	4/16/2018	63.5	9.22	420	<0.50	61.4
	4/16/2018	71.4	12.2	444	<0.50	67.0
	1/19/2018	81.7	12.7	494	<0.50	80.0
NMWQCC Standard		**250**	**10**	**1000**	**NA**	**600**

NOTES:
[1]Two samples were collected from the Copart Well on 4/16/18. A sample was collected immediately (grab) which exceeded the NMWQCC standard for nitrate. The second sample was collected after the well was purged and did not exceed the NMWQCC standard for nitrate.
Data suspect
NA = Not analyzed
ND = Non detect
NMWQCC = New Mexico Water Quality Control Commission
TDS = Total dissolved solids
TKN = Total Kjeldahl Nitrogen

Table 5. Summary of Sample Analytical Methods and Collection Requirements
Former McCatharn Dairy, Albuquerque, New Mexico

Target Analytes	Analytical Method	Sample Container	Preservative	Holding Time
Groundwater Samples				
Nitrate- N	EPA 300.0	250 mL HDPE Bottle	Cool to <6°C,	48 Hours
Nitrate/Nitrite*	EPA 300.0	250 mL HDPE Bottle	H_2SO_4 to pH <2, Cool to <6°C	28 Days
Total Kjeldhal Nitrogen	SM 4500 NORG C	250 mL HDPE Bottle	Cool to <6°C	28 Days
Sulfate	EPA 300.0	250 mL HDPE Bottle	Cool to <6°C	28 Days
Chloride	EPA 300.0	250 mL HDPE Bottle	Cool to <6°C	28 Days
Total Dissolved Solids	SM 2540 C MOD	250 mL HDPE Bottle	Cool to <6°C	7 Days

Notes:

* Sample to be put on hold and analyzed only if the unpreserved sample exceeds hold time for nitrate-n analysis.
°C = Degree Celsius
EPA = U.S. Environmental Protection Agency
HDPE = High-density polyethylene
mL = Milliliters

Table 6. Proposed Groundwater Monitoring Regimen
Former McCatharn Dairy, Albuquerque, New Mexico

Well ID	Plume Position	Well Gauging	Sampling and Analysis			Analytical Regimen				Analytical Regimen		
		Quarterly	Quarterly	Semi-Annual	Annual	Nitrate	Chloride	TDS	Sulfate	Bailing[1]	Sample Pump[1]	Sample Tap
MW-1	Source solute plume	X			X	X	X	X		X	X	
MW-2	Upgradient solute plume; upgradient LAA	X			X	X	X	X		X	X	
MW-3	Source solute plume	X		X		X	X	X	X		X	
MW-4	Cross-gradient solute plume; downgradient LAA	X		X		X	X	X		X		
MW-5	Downgradient solute plume; extraction well	X	X			X	X	X				X
MW-6	Downgradient solute plume; potential extraction well	X	X			X	X	X			X	X
MW-7[2]	Downgradient of LAA	X	X							X	X	
Copart Well	Downgradient solute plume	X	X			X	X	X				X

Notes:

LAA = land application area for pumped groundwater

Nitrate, chloride, and sulfate by EPA Method 300.0. If nitrate-n sample exceeds hold time, nitrate/nitrite will be analyzed by EPA Method 300.0.

TDS = Total dissolved solids by Method SM 2540.

1 Sampling may be by hand bailing or submersible Monsoon Pump depending on access

2 MW-7 is proposed well in Discharge Plan Application DP-1895

APPENDIX A

BORING LOGS

MONITOR WELL 1

McCutchen Drilling Aug 1988

Well Depth 86' Ground Level
2" X .020 screen 76'-86' - 2" Blank casing 76' up to
10/20 Gravel pack 86' up to 61'
Bentonite cement Grout 61' up to surface

John 877-5675

Richard Bonaguidi
Rodgers & Co.
5/6/92

RECEIVED
JUL 21 1994
GROUND WATER BUREA

DATE DRILLED	8/31/98	BORING NUMBER	MW-2
LOCATION	McCatharn Dairy	PROJECT MANAGER	WLM

DATUM	DESCRIPTION	TOV
0	East side of dirt road; silty sand	
5		
10	Brn, med silty sand, loose	
15		
20	-do-	
25	-do-	
	gry-brn -do- @ 26'	
30	-do-	
35	-do-	
40	-do-; +/- more silty	
45	-do-	
50	-do- Stop drilling on 8/31/98 Resume drilling 9/1/98	
55	-do-	
60	-do-	

CLIENT McCatharn Dairy		INnovative EXplorations
DRAWN BY W. L. Mansker	DATE 11/23	

DATE DRILLED	9/1/98	BORING NO.	MW-2
LOCATION	McCATHARN DAIRY	PROJECT MANAGER	WLM

MW-2 CONTINUED

	DESCRIPTION	TOV ppm
65	-do	
	Wet @ 68'	
70	-do-	
75	TD @ 75' bgs	
80		
85		
90		
95		
100		
105		
110		
115		
120		

CLIENT McCatharn Dairy		INnovative EXplorations
DRAWN BY W. L. Mansker	DATE 11/23	

CONSTRUCTION 4" Sch 40 PVC	MONITOR WELL NO. MW-2
LOCATION McCATHARN DAIRY	PROJECT MANAGER WLM

WELL COMPLETION DIAGRAM

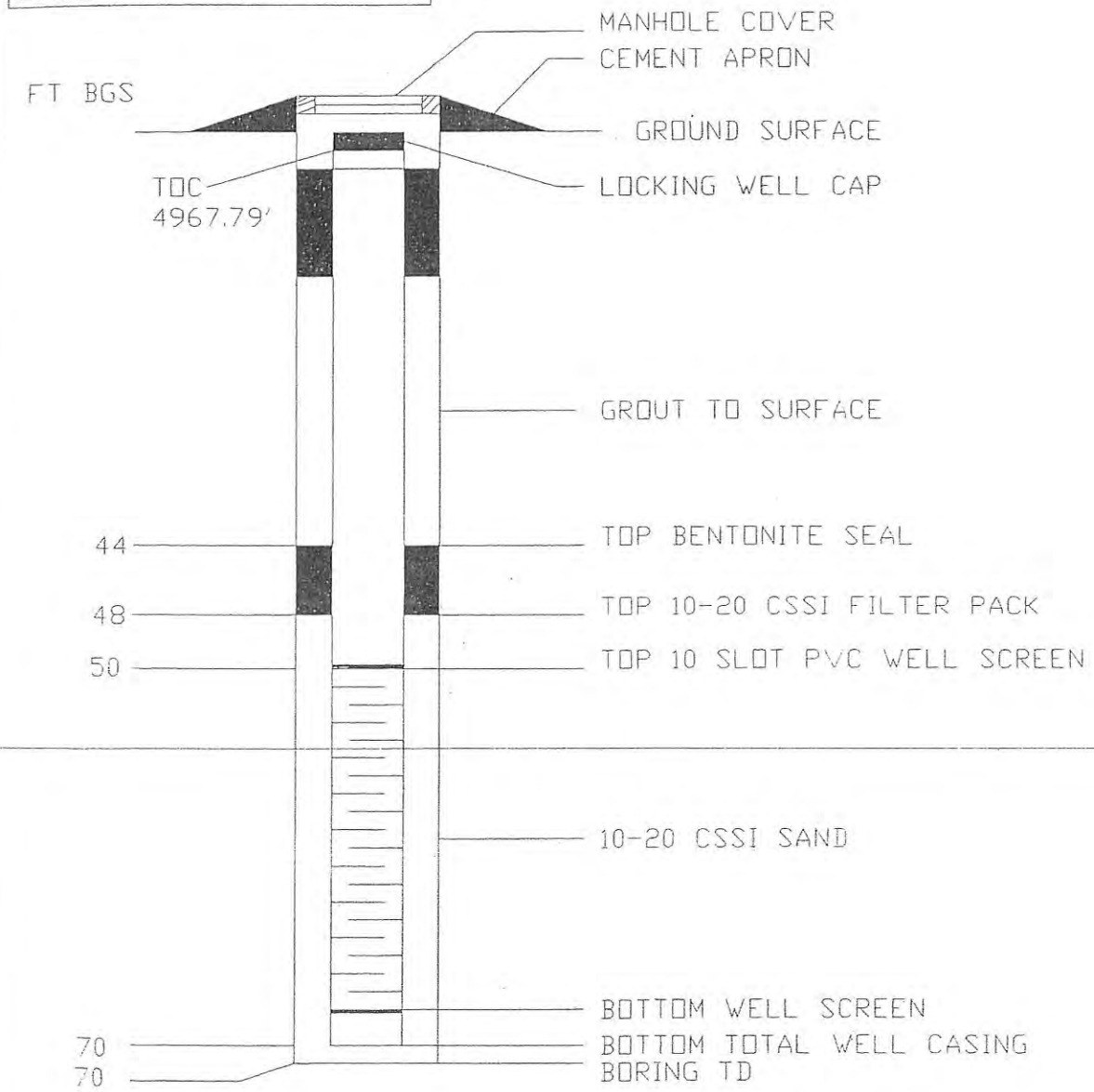

CLIENT McCatharn Dairy	INnovative EXplorations
DRAWN BY W. L. Mansker — DATE 11/26/98	

DATE DRILLED	9/1-2/98	BORING NUMBER	MW-3
LOCATION	McCatharn Dairy	PROJECT MANAGER	WLM

0	DATUM	DESCRIPTION	TOV
		Surface sandy soils; north of road	
5			
10		dry silty sand	
15		-do-	
20		-do-; damp, loose silty sand	
25			
30		med-coarse gravelly sand, loose, well-sorted, dry	
		Brn, fine-med silty sand	
35		Fine gravelly, silty sand (re 'sugar' aeolian sand)	
40		-do-, v dry, loose, pebbley, fine sand	
45		-do-; no pebbles; same fine sand, dry	
50		Brn, pebbley, fine silty sand, dry	
55		-do-; fewer pebbles	
60		-do-; damp fine pebbley sand	

CLIENT McCatharn Dairy		INnovative EXplorations
DRAWN BY W. L. Mansker	DATE 11/23	

DATE DRILLED	9/1-2/98	BORING NO.	MW-3
LOCATION	McCATHARN DAIRY	PROJECT MANAGER	WLM

MW-3 CONTINUED

	DESCRIPTION	TOV ppm
65	-do-	
70	-do-; lower 4" slightly pebbley	
75	-do-	
80	-do-; damp, no pebbles; Stop drilling 9/1/98 Resume drilling 9/2/98	
85	-do	
90	GW approx. 88' bgs	
95		
100	TD @ 98' bgs	

CLIENT	McCatharn Dairy	INnovative EXplorations	
DRAWN BY	W. L. Mansker	DATE	11/23

CONSTRUCTION 4" Sch 40 PVC	MONITOR WELL NO. MW-3
LOCATION McCATHARN DAIRY	PROJECT MANAGER WLM

WELL COMPLETION DIAGRAM

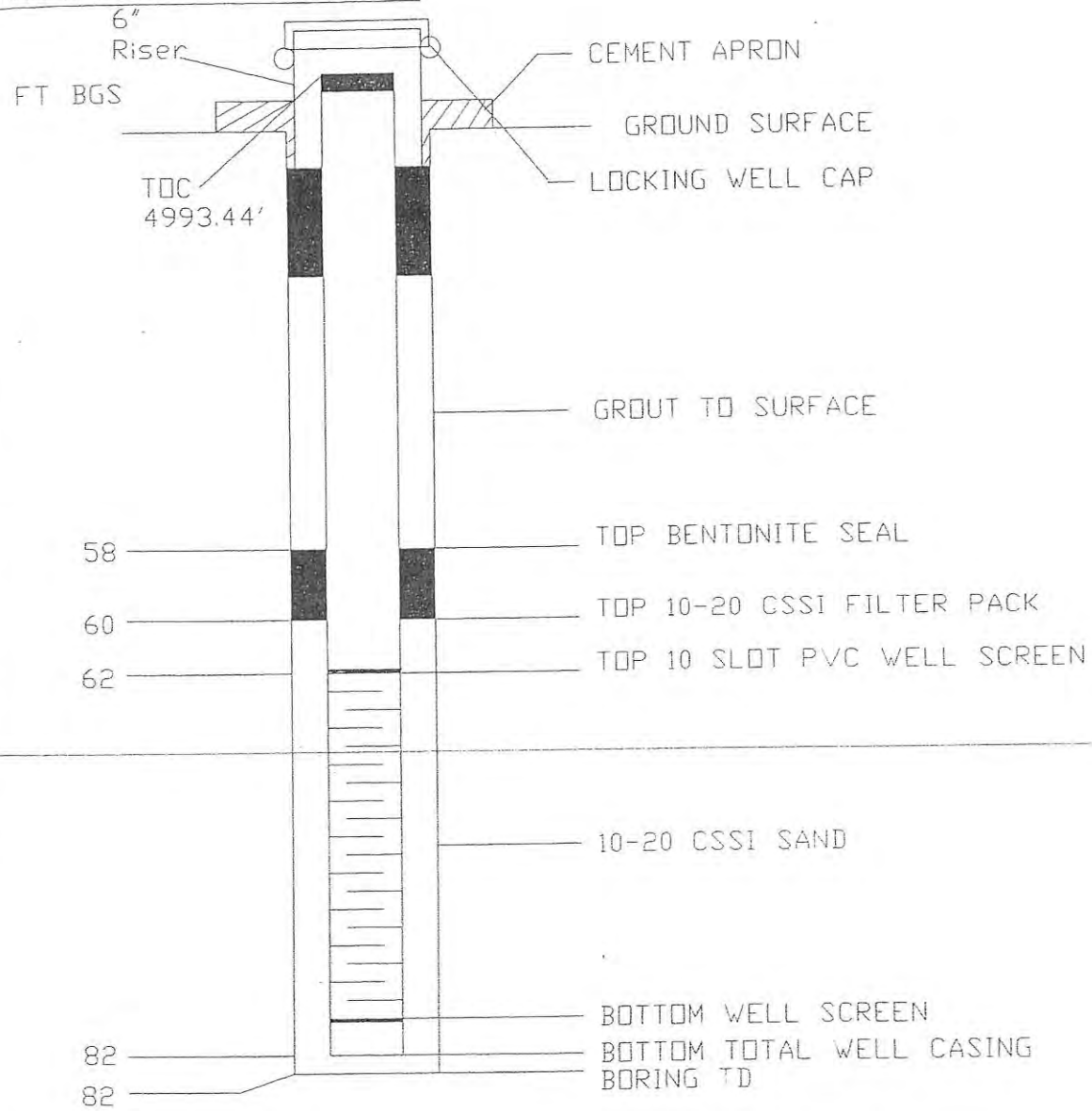

CLIENT McCatharn Dairy	INnovative EXplorations
DRAWN BY W. L. Mansker — DATE 11/26/98	

LITHOLOGIC LOG

Project: McCatharn Dairy
Location: Albuquerque, NM
Client: John McCatharn
Job/File #:
Drilling Co.: Rodgers & Co.
Drilling Method: 6.5" Hollowstem Auger
Logged by: Craig Smith, GGI

Boring/Well #: MW-4
Date: 2/13/2007
Total Depth of casing: 120 feet
TOC Elevation: 5011.12
Depth to Water: 106.72 feet
Water Elevation: 4904.40

Well/Boring Completion				Lithologic Characteristics				
Depth (ft)	Pipe	Fill	Casing Material	Sample ID: PID	Sample ID: Type	Lithology	Depth	Comments
		Cement						
10							0-18 ft	Fine-medium sand, 20% silt, tan, dry.
20		Cement (5% Bentonite)						
30							18-35 ft	Fine-coarse sand, 10% coarse 30% silt, brown/tan, dry.
40			2" Sch-40 PVC Casing					
50								
60							35-85 ft	Fine-course sand, 10% medium, 30% coarse, trace pebbles, tan, dry.
70								
80								
90							85-90 ft	Fine-medium clayey sand, 20% clay, brown, slightly moist.
100		Bentonite						
Water level		16/30 Silica Sand	0.010 Sch-40 Mill Slot Screen				90-120 ft	Fine-medium sand, tan/brown, trace silt/clay.
110								
120			Bottom Cap					

McCATHARN DAIRY MW-5 and MW-6 Boring Logs and MW Completion Diagrams
Driller: Rodgers Env. Svcs. Method: Mud Rotary Dates: 3/4-6/2015 PM: W. Mansker

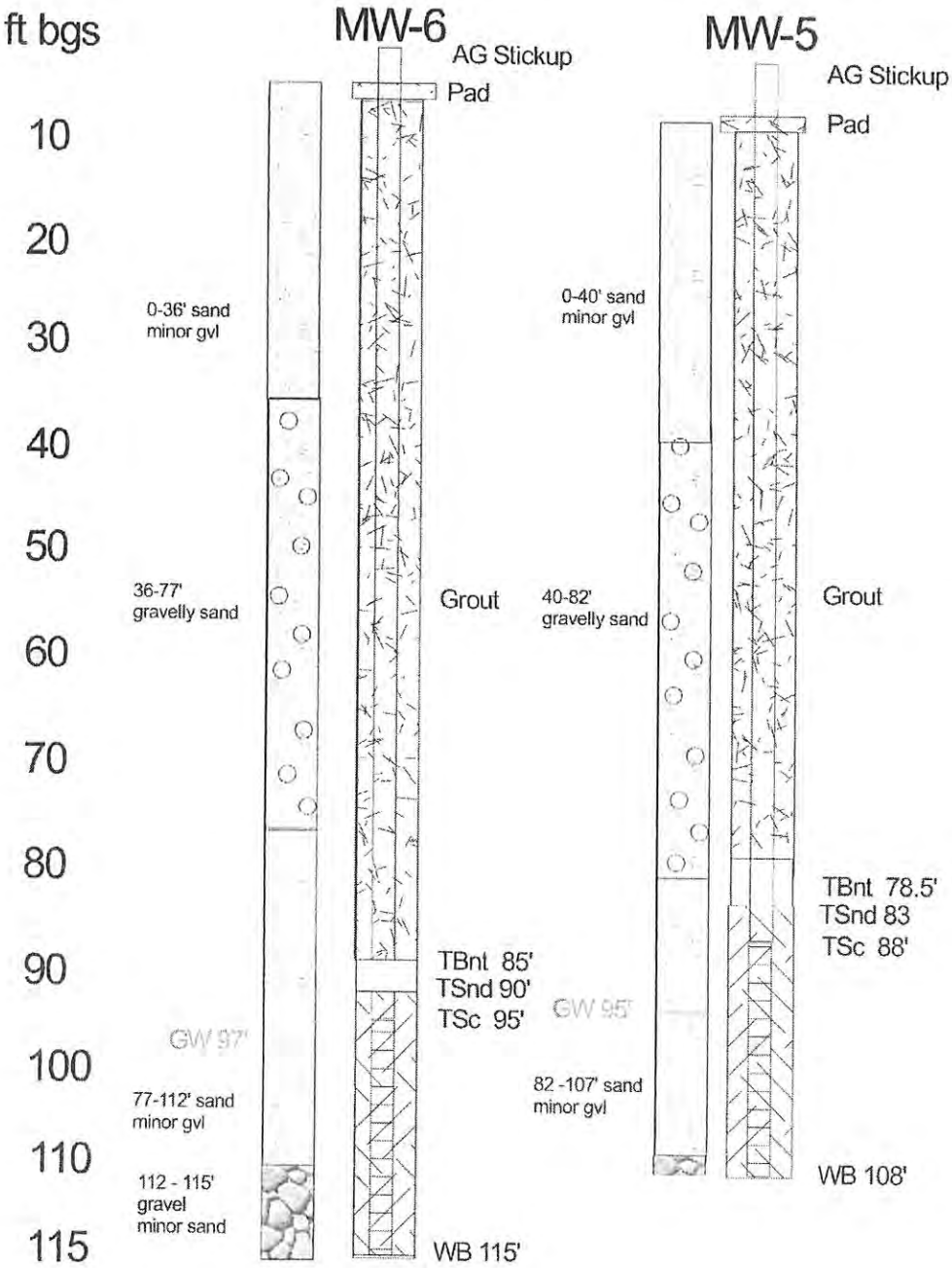

Revised June 1972

STATE ENGINEER OFFICE

WELL RECORD

Section 1. GENERAL INFORMATION

(A) Owner of well Pete McCathran Owner's Well No. _____

Street or Post Office Address Route 3 Box 774

City and State Los Lunas, N.M. 87031

Well was drilled under Permit No. RG 2916-S and is located in the:

a. ____ ¼ ____ ¼ SE ¼ Se ¼ of Section 19 Township 9N Range 3E N.M.P.M.

b. Tract No. _____ of Map No. _____ of the _____

c. Lot No. _____ of Block No. _____ of the _____
Subdivision, recorded in _____ County.

d. X= _____ feet, Y= _____ feet, N.M. Coordinate System _____ Zone in the _____ Grant.

(B) Drilling Contractor Rodgers & Co., Inc. License No. WD 225

Address 2615 Isleta Blvd SW, Albuq., N.M. 87105

Drilling Began 3/20/89 Completed 3/22/89 Type tools _____ Size of hole _____ in.

Elevation of land surface or _____ at well is _____ ft. Total depth of well 274' ft.

Completed well is ☒ shallow ☐ artesian. Depth to water upon completion of well 90' ft.

Section 2. PRINCIPAL WATER-BEARING STRATA

Depth in Feet From	Depth in Feet To	Thickness in Feet	Description of Water-Bearing Formation	Estimated Yield (gallons per minute)
190'	200'		Coarse sand & sm. gravel	90+GPM
210'	.250'		Coarse to med. sand, clay	
250'	270'		Coarse sand to med., clay,	
			coarse to fine sand w/clay	

Section 3. RECORD OF CASING

Diameter (inches)	Pounds per foot	Threads per in.	Depth in Feet Top	Depth in Feet Bottom	Length (feet)	Type of Shoe	Perforations From	Perforations To
6 5/8"	OD		1'6"	190'		None	190'	200'
			200'	210'			210'	250'
							250'	270'

Section 4. RECORD OF MUDDING AND CEMENTING

Depth in Feet From	Depth in Feet To	Hole Diameter	Sacks of Mud	Cubic Feet of Cement	Method of Placement

89APR 17 A 8:25
STATE ENGINEER OFFICE
DISTRICT
ALBUQUERQUE, NEX.

Section 5. PLUGGING RECORD

Plugging Contractor _____

Address _____

Plugging Method _____

Date Well Plugged _____

Plugging approved by:

_____
State Engineer Representative

No.	Depth in Feet Top	Depth in Feet Bottom	Cubic Feet of Cement
1			
2			
3			
4			

FOR USE OF STATE ENGINEER ONLY

Date Received April 17, 1989

Quad _____ FWL _____ FSL _____

File No. RG-2916-S

BE

Section 6. LOG OF HOLE

Depth in Feet From	Depth in Feet To	Thickness in Feet	Color and Type of Material Encountered
0'	110'		Sandy clay w/sand & gravel
110'	125'		Cemented large gravel rough & hard
125'	135'		Gravel w/clay layers
135'	140'		Clay
140'	160'		Sandy clay
160'	175'		Sandy clay w/clay layers
175'	180'		Small gravel
180'	185'		Red clay sticky
185'	190'		Sandy clay
190'	200'		Coarse sand w/small gravel good
200'	210'		Clay w/fine to silty sand
210'	218'		Coarse to med. sand w/very little clay
218'	220'		Clay
220'	238'		Coarse to med. sand w/clay stringers
238'	240'		Clay
240'	250'		Coarse to med. sand
250'	258'		Coarse to fine sand w/clay stringers fair
258'	260'		Clay
260'	270'		Coarse sand w/clay good
270'	277'		Fine silty sand w/clay

Section 7. REMARKS AND ADDITIONAL INFORMATION

The undersigned hereby certifies that, to the best of his knowledge and belief, the foregoing is a true and correct record of the above described hole.

Arthur Lim
Driller

INSTRUCTIONS: This form should be executed in triplicate, preferably typewritten, and submitted to the appropriate district office of the State Engineer. All sections, except Section 5, shall be answered as completely and accurately as possible when any well is drilled, repaired or deepened. When this f[illegible] is used as a plugging record, only Section 1(a) [illegible] Section 5 need be [illegible]

Addition to Permit N 2916 S

Form WR-23 STATE ENGINEER OFFICE

WELL RECORD

INSTRUCTIONS: This form should be executed in triplicate, preferably typewritten, and submitted to the nearest district office of the State Engineer. All sections, except Section 5, shall be answered as completely and accurately as possible when any well is drilled, repaired or deepened. When this form is used as a plugging record, only Section 1A and Section 5 need be completed.

Section 1

(Plat of 640 acres)

(A) Owner of well V. H. Magatagan

Street and Number Rt. 1 Box 800

City Albuquerque, New Mexico State

Well was drilled under Permit No. 2916 S and is located in the SE ¼ SE ¼ SE ¼ of Section 1 Twp. 9N Rge. 3 E

(B) Drilling Contractor Allen H. Milligan License No. WD-216

Street and Number Rt. 6, Box 44,

City Albuquerque, State New Mexico

Drilling was commenced Jan. 20 19 60

Drilling was completed Jan. 24 19 60

Elevation at top of casing in feet above sea level Total depth of well 184

State whether well is shallow or artesian Depth to water upon completion 86

Section 2 PRINCIPAL WATER-BEARING STRATA

No.	Depth in Feet From	Depth in Feet To	Thickness in Feet	Description of Water-Bearing Formation
1				
2				
3				
4				
5				

1960 FEB -1 AM 9:18
STATE ENGINEER OF N.M.
DISTRICT I
ALBUQUERQUE, N.M.

Section 3 RECORD OF CASING

Dia in.	Pounds ft.	Threads in	Depth Top	Depth Bottom	Feet	Type Shoe	Perforations From	Perforations
7"OD	20	Threaded	Surface	184			162	182

Section 4 RECORD OF MUDDING AND CEMENTING

Depth in Feet From	Depth in Feet To	Diameter Hole in in.	Tons Clay	No. Sacks of Cement	Methods Used

Section 5 PLUGGING RECORD

Name of Plugging Contractor License No.

APPENDIX B

CONCENTRATION TREND GRAPHS

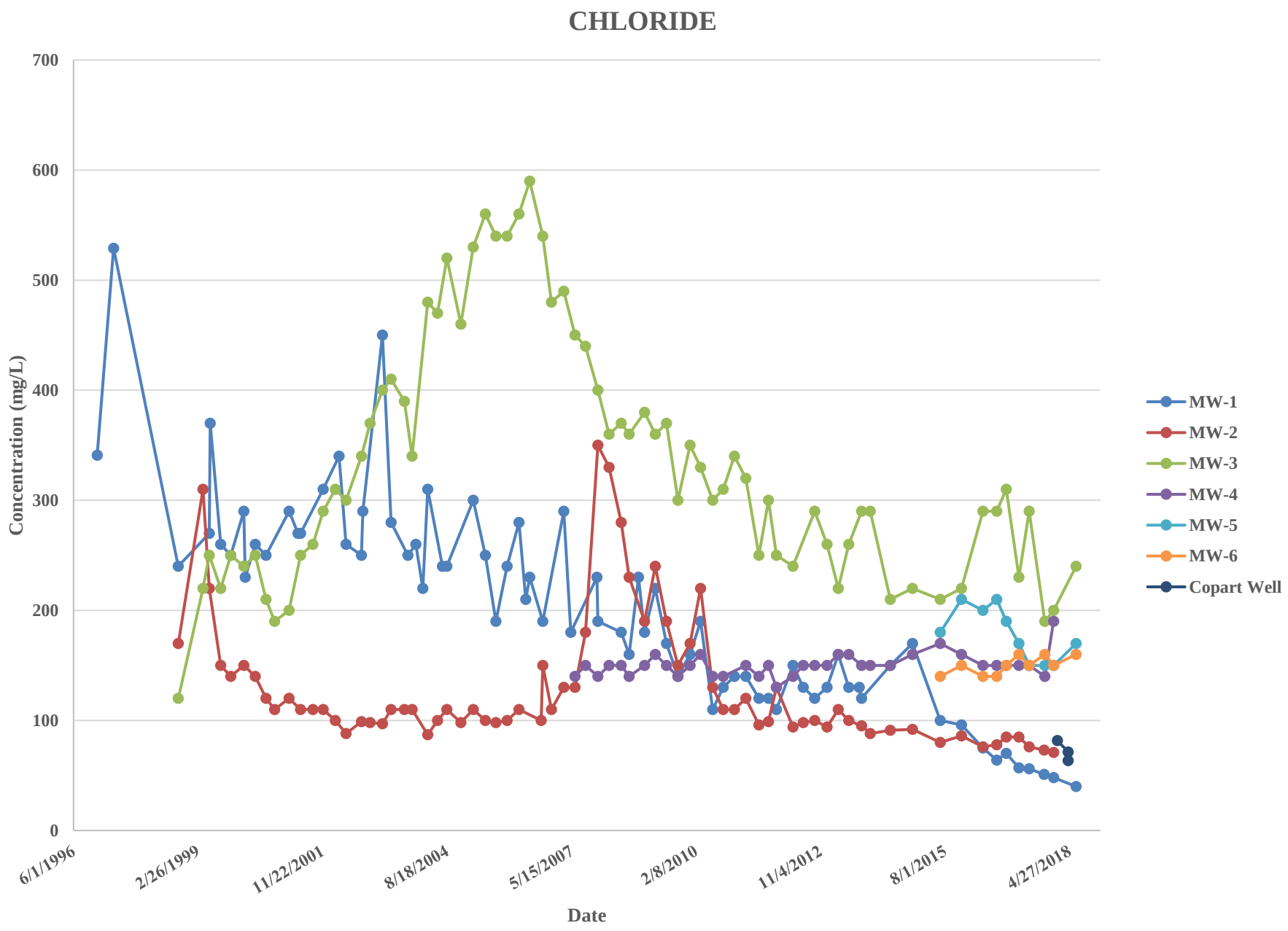
CHLORIDE
Concentration (mg/L)
700
600
500
400
300
200
100
0
6/1/1996
2/26/1999
11/22/2001
8/18/2004
5/15/2007
2/8/2010
11/4/2012
8/1/2015
4/27/2018
Date
MW-1
MW-2
MW-3
MW-4
MW-5
MW-6
Copart Well

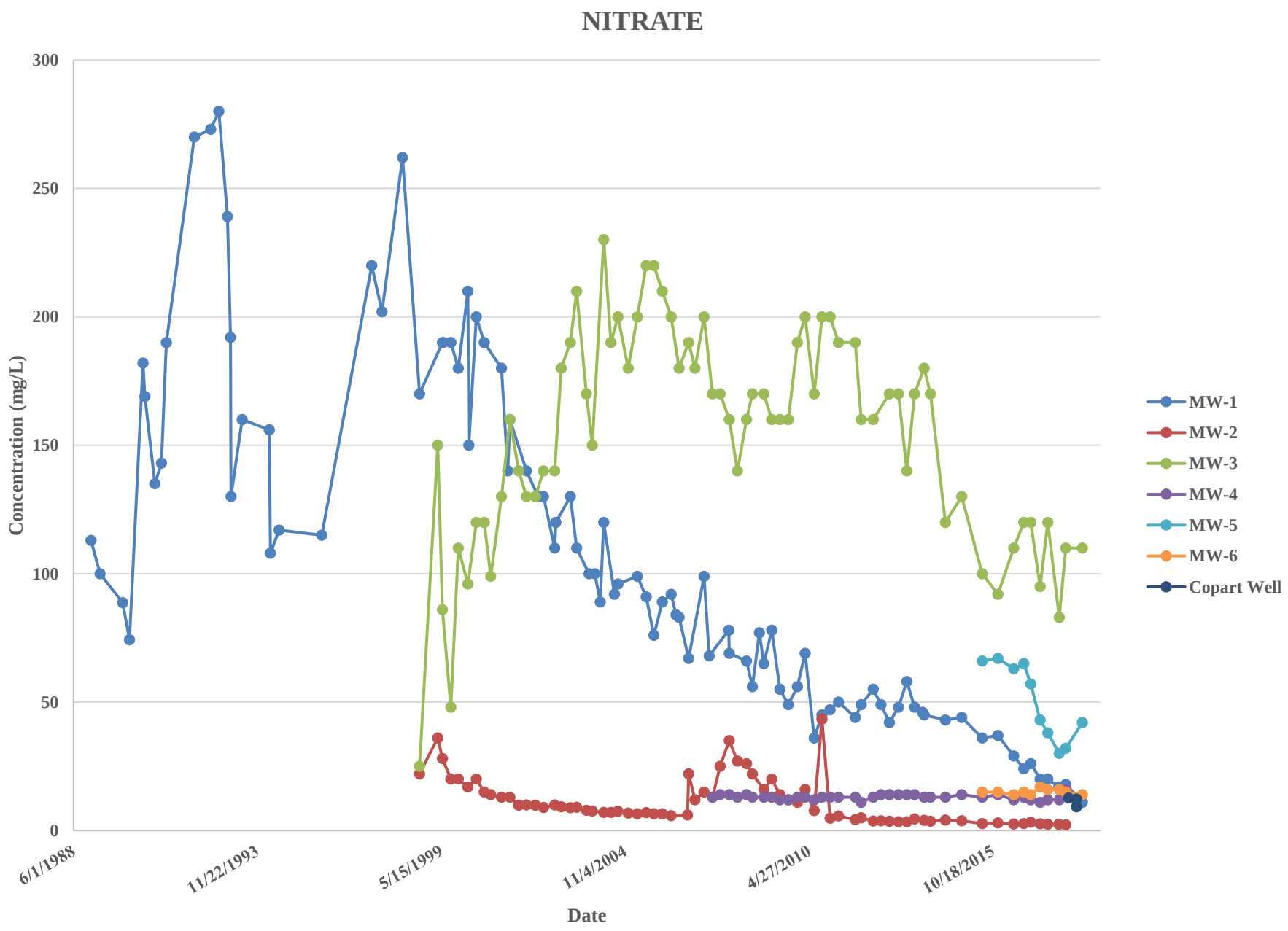
NITRATE
300
250
200
150
100
50
0
Concentration (mg/L)
6/1/1988
11/22/1993
5/15/1999
11/4/2004
4/27/2010
10/18/2015
Date
MW-1
MW-2
MW-3
MW-4
MW-5
MW-6
Copart Well

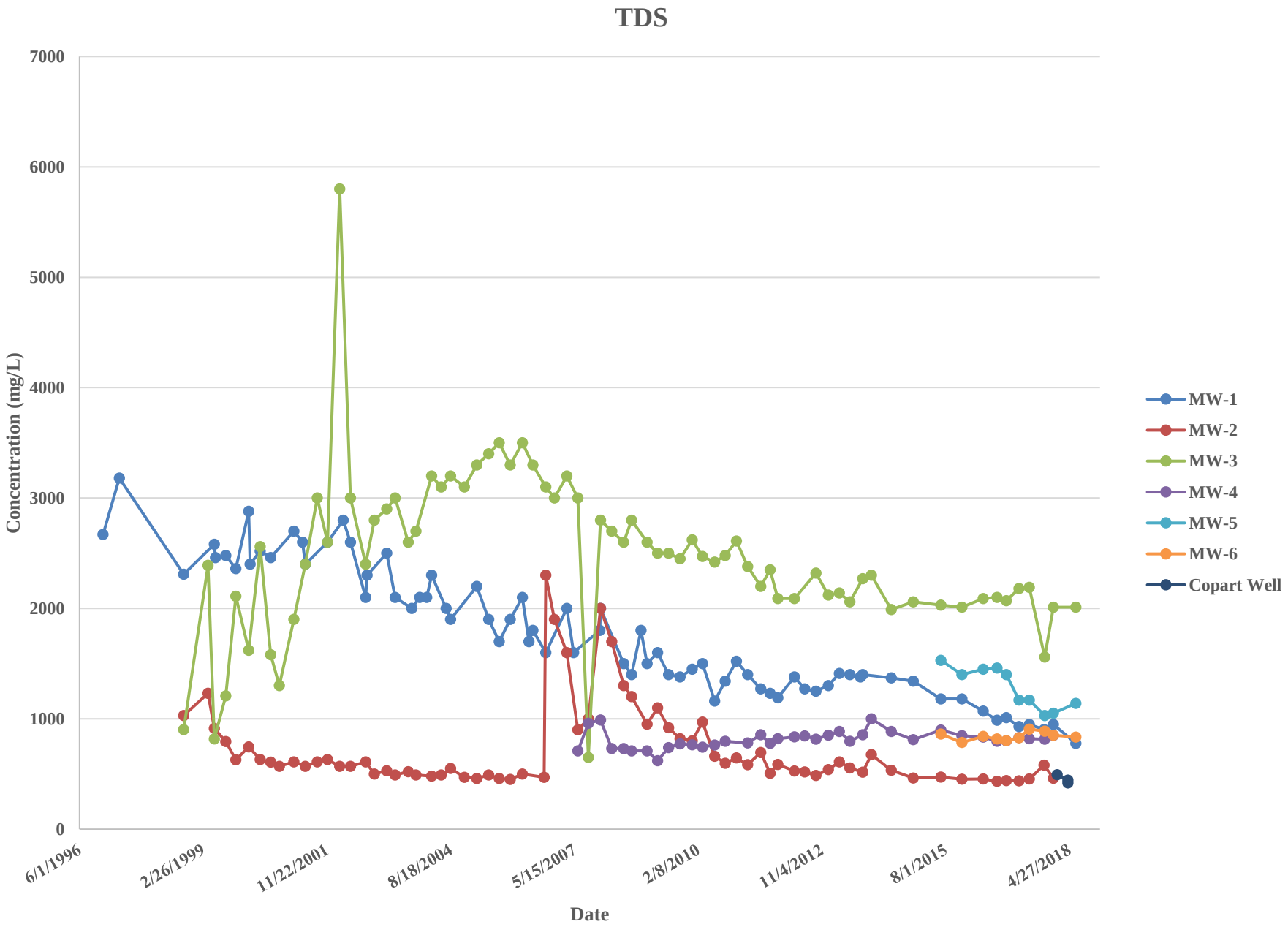
TDS
7000
6000
5000
4000
3000
2000
1000
0
Concentration (mg/L)
6/1/1996
2/26/1999
11/22/2001
8/18/2004
5/15/2007
2/8/2010
11/4/2012
8/1/2015
4/27/2018
Date
MW-1
MW-2
MW-3
MW-4
MW-5
MW-6
Copart Well

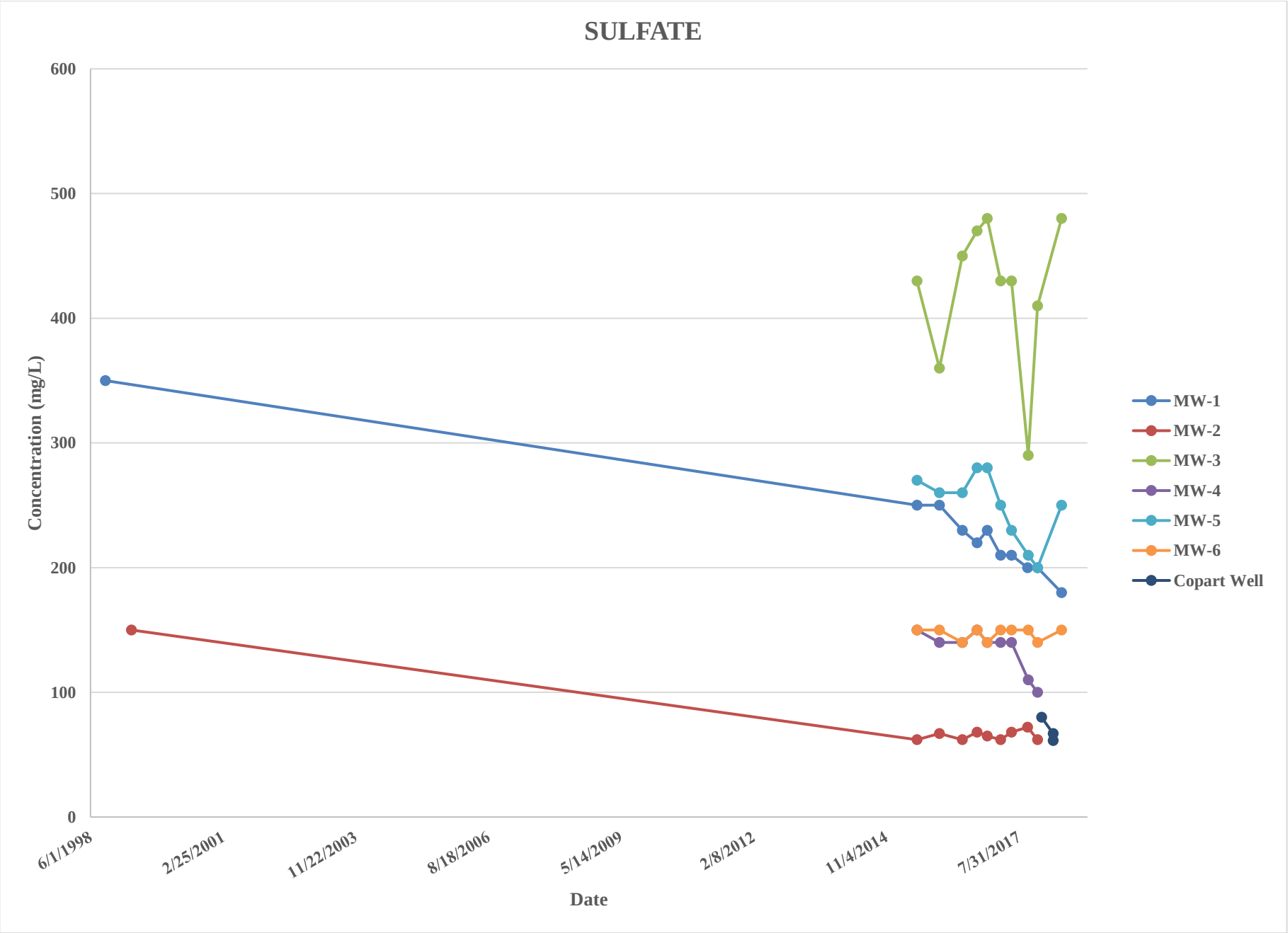
SULFATE
600
500
400
300
200
100
0
Concentration (mg/L)
6/1/1998
2/25/2001
11/22/2003
8/18/2006
5/14/2009
2/8/2012
11/4/2014
7/31/2017
Date
MW-1
MW-2
MW-3
MW-4
MW-5
MW-6
Copart Well

APPENDIX C

IRRIGATION ANALYSIS

Evaluation of Long-Term Sustained Pumping and Resultant Nitrate Concentrations

John McCatharn with assistance from Rogers Drilling installed a {pump} and {VFD} in MW-5 to perform a nine-day-long pumping test to determine the long-term sustained pumping rate and influent nitrate concentrations at the end of the pumping period. These data were in turn used to finalize the Stage 2 Abatement Plan design for the former McCatharn Dairy.

Pumping began on July 27, 2019 at 9:00 a.m. with an initial totalizing meter reading of 18,032,420. The pumping period ended on August 5, 2019 at 10:15 a.m. The ending meter reading was 18,188,557. The total gallons pumped was 156,137 gallons over a period of 9 days, 1 hour, and 15 minutes (13,035 minutes). The average sustained discharged over this period was:

$$Q = \frac{Total\ Volume\ Pumped\ (gallons)}{Total\ Elapsed\ Time\ (mintes)} = \frac{156{,}137}{13{,}035} = 12.0\ gpm$$

Nitrate samples were collected on July 30, 2019 and at the end of pumping on August 5, 2019. The results were 30 mg/L and 26 mg/L, respectively.

For design purposes, a pumping rate of 11.5 gpm and influent nitrate concentration of 26 mg/L is appropriate.

CALCULATION C-1
IRRIGATION REQUIREMENTS WITH PAN EVAPORATION LOSSES
FORMER McCATHARN DAIRY, ALBUQUERQUE, NM

1 Groundwater Extraction Rate MW-5	11.5	gpm	
	16560	gpd	
	6044400	gal/yr	
	808075	ft^3/yr	
	2214	ft^3/day	
2 Pan Evaporation	89.1	in/yr	NOAA
	7.43	ft/yr	
Lagoon Area	38140	ft^2	
Total Evaporated Volume	283190	ft^3/yr	
	776	ft^3/day	
3 Net Irrigation Water Available	1438	ft^3/day	Groundwater extraction rate minus pan evaporation
	524885	ft^3/yr	
	3926143	gal/yr	
4 Irrigation demand	50	in/yr	Irrigated pastures for New Mexico
	365	day/yr	Three crops per year at 4 months per crop
	0.14	in/day	
	0.011	ft/day	
5 Required acreage in irrigation	125972	ft^2/day	Net irrigation water available divided by irrigation demand
	2.9	acre	
6 Irrigation Rates	85	gal/min	Sta-Rite DHJ 5-HP Pump with Rainbird 85 EHD Impact Sprinkler
	11.4	ft^3/min	
	126.5	min/day	
	2.11	hr/day	

CALCULATION C-1
IRRIGATION REQUIREMENTS WITH PAN EVAPORATION LOSSES
FORMER McCATHARN DAIRY, ALBUQUERQUE, NM

7	**Nitrogen Loading**	26	mg/L	MW-5 Nitrate Concentration
		0.000216	lb/gal	
		850	lb/yr	
	Nitrogen Demand (fescue)	250	lb/acre	Irrigated pastures for New Mexico
	Required crop acreage per year	3.4	acre	Loading divided by demand
	Required irrigation	2.9	acre	Required Acreage in Irrigation
	Irrigated Acreage Surplus (+)/Deficit (-)	0.5	acre	Agronomic demand requires 3.4 acres

HALL
ENVIRONMENTAL
ANALYSIS
LABORATORY

Hall Environmental Analysis Laboratory
4901 Hawkins NE
Albuquerque, NM 87109
TEL: 505-345-3975 FAX: 505-345-4107
Website: www.hallenvironmental.com

July 31, 2019

John McCatharn
McCatharn Dairy
P. O. Box 19306
Albuquerque, NM 87119-0306
TEL: (505) 877-5675
FAX (505) 877-5675

RE: Dairy Water Monitoring OrderNo.: 1907E41

Dear John McCatharn:

Hall Environmental Analysis Laboratory received 1 sample(s) on 7/29/2019 for the analyses presented in the following report.

These were analyzed according to EPA procedures or equivalent. To access our accredited tests please go to www.hallenvironmental.com or the state specific web sites. In order to properly interpret your results, it is imperative that you review this report in its entirety. See the sample checklist and/or the Chain of Custody for information regarding the sample receipt temperature and preservation. Data qualifiers or a narrative will be provided if the sample analysis or analytical quality control parameters require a flag. When necessary, data qualifiers are provided on both the sample analysis report and the QC summary report, both sections should be reviewed. All samples are reported, as received, unless otherwise indicated. Lab measurement of analytes considered field parameters that require analysis within 15 minutes of sampling such as pH and residual chlorine are qualified as being analyzed outside of the recommended holding time.

Please don't hesitate to contact HEAL for any additional information or clarifications.

ADHS Cert #AZ0682 -- NMED-DWB Cert #NM9425 -- NMED-Micro Cert #NM0901

Sincerely,

Andy Freeman
Laboratory Manager
4901 Hawkins NE
Albuquerque, NM 87109

Analytical Report
Lab Order **1907E41**
Date Reported: **7/31/2019**

Hall Environmental Analysis Laboratory, Inc.

CLIENT: McCatharn Dairy
Project: Dairy Water Monitoring
Lab ID: 1907E41-001 **Matrix:** AQUEOUS

Client Sample ID: Monitor Well #5
Collection Date: 7/29/2019 6:30:00 AM
Received Date: 7/29/2019 9:55:00 AM

Analyses	Result	RL	Qual	Units	DF	Date Analyzed	Batch
EPA METHOD 300.0: ANIONS						Analyst:	**CAS**
Nitrogen, Nitrate (As N)	30	2.0	*	mg/L	20	7/29/2019 3:45:52 PM	R61742

Refer to the QC Summary report and sample login checklist for flagged QC data and preservation information.

Qualifiers:

*	Value exceeds Maximum Contaminant Level.	B	Analyte detected in the associated Method Blank
D	Sample Diluted Due to Matrix	E	Value above quantitation range
H	Holding times for preparation or analysis exceeded	J	Analyte detected below quantitation limits
ND	Not Detected at the Reporting Limit	P	Sample pH Not In Range
PQL	Practical Quanitative Limit	RL	Reporting Limit
S	% Recovery outside of range due to dilution or matrix		

QC SUMMARY REPORT

Hall Environmental Analysis Laboratory, Inc.

WO#: **1907E41**

31-Jul-19

Client: McCatharn Dairy

Project: Dairy Water Monitoring

Sample ID: **MB** SampType: **MBLK** TestCode: **EPA Method 300.0: Anions**

Client ID: **PBW** Batch ID: **R61742** RunNo: **61742**

Prep Date: Analysis Date: **7/29/2019** SeqNo: **2093027** Units: **mg/L**

Analyte	Result	PQL	SPK value	SPK Ref Val	%REC	LowLimit	HighLimit	%RPD	RPDLimit	Qual
Nitrogen, Nitrate (As N)	ND	0.10								

Sample ID: **LCS** SampType: **LCS** TestCode: **EPA Method 300.0: Anions**

Client ID: **LCSW** Batch ID: **R61742** RunNo: **61742**

Prep Date: Analysis Date: **7/29/2019** SeqNo: **2093028** Units: **mg/L**

Analyte	Result	PQL	SPK value	SPK Ref Val	%REC	LowLimit	HighLimit	%RPD	RPDLimit	Qual
Nitrogen, Nitrate (As N)	2.5	0.10	2.500	0	101	90	110			

Qualifiers:

*	Value exceeds Maximum Contaminant Level.	B	Analyte detected in the associated Method Blank
D	Sample Diluted Due to Matrix	E	Value above quantitation range
H	Holding times for preparation or analysis exceeded	J	Analyte detected below quantitation limits
ND	Not Detected at the Reporting Limit	P	Sample pH Not In Range
PQL	Practical Quanitative Limit	RL	Reporting Limit
S	% Recovery outside of range due to dilution or matrix		

HALL ENVIRONMENTAL ANALYSIS LABORATORY

Hall Environmental Analysis Laboratory
4901 Hawkins NE
Albuquerque, NM 87109
TEL: 505-345-3975 FAX: 505-345-4107
Website: www.hallenvironmental.com

Sample Log-In Check List

Client Name: McCatharn Dairy Work Order Number: 1907E41 RcptNo: 1

Received By: **Erin Melendrez** 7/29/2019 9:55:00 AM
Completed By: **Erin Melendrez** 7/29/2019 10:23:10 AM
Reviewed By: DAD 7/29/19

Chain of Custody

1. Is Chain of Custody complete? Yes ☑ No ☐ Not Present ☐
2. How was the sample delivered? Client

Log In

3. Was an attempt made to cool the samples? Yes ☑ No ☐ NA ☐
4. Were all samples received at a temperature of >0° C to 6.0°C Yes ☐ No ☑ NA ☐
   Samples were collected the same day and chilled.
5. Sample(s) in proper container(s)? Yes ☑ No ☐
6. Sufficient sample volume for indicated test(s)? Yes ☑ No ☐
7. Are samples (except VOA and ONG) properly preserved? Yes ☑ No ☐
8. Was preservative added to bottles? Yes ☐ No ☑ NA ☐
9. VOA vials have zero headspace? Yes ☐ No ☐ No VOA Vials ☑
10. Were any sample containers received broken? Yes ☐ No ☑
11. Does paperwork match bottle labels? Yes ☑ No ☐
    (Note discrepancies on chain of custody)
12. Are matrices correctly identified on Chain of Custody? Yes ☑ No ☐
13. Is it clear what analyses were requested? Yes ☑ No ☐
14. Were all holding times able to be met? Yes ☑ No ☐
    (If no, notify customer for authorization.)

# of preserved bottles checked for pH: 1 (<2 or >12 unless noted)
Adjusted? NO
Checked by: D.M. 7/29/17

Special Handling (if applicable)

15. Was client notified of all discrepancies with this order? Yes ☐ No ☐ NA ☑

Person Notified: Date:
By Whom: Via: ☐ eMail ☐ Phone ☐ Fax ☐ In Person
Regarding:
Client Instructions:

16. Additional remarks:

17. **Cooler Information**

Cooler No	Temp °C	Condition	Seal Intact	Seal No	Seal Date	Signed By
1	6.2	Good	Not Present			

Chain-of-Custody Record

Client: McCathern Dairy

Mailing Address: P.O. Box 19306
Albuquerque, NM 87119

Phone #: 505-366-4219

email or Fax#: johnmccathern@aol.com

QA/QC Package:
☐ Standard ☐ Level 4 (Full Validation)

Accreditation
☐ NELAP ☐ Other _____

☐ EDD (Type) _____

Turn-Around Time:
☒ Standard ☐ Rush _____

Project Name: Dairy Water Monitoring

Project #: Monitor Well #5

Project Manager: John McCathern

Sampler: John McCathern

On Ice: ☒ Yes ☐ No

Sample Temperature: 6.4-0.7(CF)=6.2°C

HALL ENVIRONMENTAL ANALYSIS LABORATORY

www.hallenvironmental.com

4901 Hawkins NE - Albuquerque, NM 87109

Tel. 505-345-3975 Fax 505-345-4107

Analysis Request

Date	Time	Matrix	Sample Request ID	Container Type and #	Preservative Type	HEAL No. 1907E41	BTEX + MTBE + TMB's (8021)	BTEX + MTBE + TPH (Gas only)	TPH 8015B (GRO / DRO / MRO)	TPH (Method 418.1)	EDB (Method 504.1)	PAH's (8310 or 8270 SIMS)	RCRA 8 Metals	Anions (F,Cl,NO_3,NO_2,PO_4,SO_4)	8081 Pesticides / 8082 PCB's	8260B (VOA)	8270 (Semi-VOA)					Air Bubbles (Y or N)
7/29/19	6:30AM	Aq	Monitor Well #5			-001								X								

Date	Time	Relinquished by:	Received by:	Date	Time
7/29/19	9:55 AM	John McCathern	[signature]	7/29/19	0955
Date:	Time:	Relinquished by:	Received by:	Date	Time

Remarks:

If necessary, samples submitted to Hall Environmental may be subcontracted to other accredited laboratories. This serves as notice of this possibility. Any sub-contracted data will be clearly notated on the analytical report.

HALL
ENVIRONMENTAL
ANALYSIS
LABORATORY

Hall Environmental Analysis Laboratory
4901 Hawkins NE
Albuquerque, NM 87109
TEL: 505-345-3975 FAX: 505-345-4107
Website: www.hallenvironmental.com

August 07, 2019

John McCatharn

John McCatharn
PO Box 19306
Albuquerque, NM 87119-0306
TEL: (505) 366-4214
FAX

RE: McCatharn Dairy

OrderNo.: 1908165

Dear John McCatharn:

Hall Environmental Analysis Laboratory received 1 sample(s) on 8/5/2019 for the analyses presented in the following report.

These were analyzed according to EPA procedures or equivalent. To access our accredited tests please go to www.hallenvironmental.com or the state specific web sites. In order to properly interpret your results, it is imperative that you review this report in its entirety. See the sample checklist and/or the Chain of Custody for information regarding the sample receipt temperature and preservation. Data qualifiers or a narrative will be provided if the sample analysis or analytical quality control parameters require a flag. When necessary, data qualifiers are provided on both the sample analysis report and the QC summary report, both sections should be reviewed. All samples are reported, as received, unless otherwise indicated. Lab measurement of analytes considered field parameters that require analysis within 15 minutes of sampling such as pH and residual chlorine are qualified as being analyzed outside of the recommended holding time.

Please don't hesitate to contact HEAL for any additional information or clarifications.

ADHS Cert #AZ0682 -- NMED-DWB Cert #NM9425 -- NMED-Micro Cert #NM0901

Sincerely,

Andy Freeman
Laboratory Manager
4901 Hawkins NE
Albuquerque, NM 87109

Hall Environmental Analysis Laboratory, Inc.

Analytical Report
Lab Order **1908165**
Date Reported: **8/7/2019**

CLIENT: John McCatharn
Project: McCatharn Dairy
Lab ID: 1908165-001
Matrix: AQUEOUS

Client Sample ID: Monitor Well #5
Collection Date: 8/5/2019 10:07:00 AM
Received Date: 8/5/2019 11:00:00 AM

Analyses	Result	RL	Qual	Units	DF	Date Analyzed	Batch
EPA METHOD 300.0: ANIONS						Analyst: **MRA**	
Nitrogen, Nitrate (As N)	26	2.0	*	mg/L	20	8/5/2019 3:24:15 PM	R61919

Refer to the QC Summary report and sample login checklist for flagged QC data and preservation information.

Qualifiers:

*	Value exceeds Maximum Contaminant Level.	B	Analyte detected in the associated Method Blank
D	Sample Diluted Due to Matrix	E	Value above quantitation range
H	Holding times for preparation or analysis exceeded	J	Analyte detected below quantitation limits
ND	Not Detected at the Reporting Limit	P	Sample pH Not In Range
PQL	Practical Quanitative Limit	RL	Reporting Limit
S	% Recovery outside of range due to dilution or matrix		

QC SUMMARY REPORT

Hall Environmental Analysis Laboratory, Inc.

WO#: **1908165**

07-Aug-19

Client: John McCatharn
Project: McCatharn Dairy

Sample ID: **MB**	SampType: **mblk**	TestCode: **EPA Method 300.0: Anions**								
Client ID: **PBW**	Batch ID: **R61919**	RunNo: **61919**								
Prep Date:	Analysis Date: **8/5/2019**	SeqNo: **2099666**	Units: **mg/L**							
Analyte	Result	PQL	SPK value	SPK Ref Val	%REC	LowLimit	HighLimit	%RPD	RPDLimit	Qual
Nitrogen, Nitrate (As N)	ND	0.10								

Sample ID: **LCS**	SampType: **lcs**	TestCode: **EPA Method 300.0: Anions**								
Client ID: **LCSW**	Batch ID: **R61919**	RunNo: **61919**								
Prep Date:	Analysis Date: **8/5/2019**	SeqNo: **2099667**	Units: **mg/L**							
Analyte	Result	PQL	SPK value	SPK Ref Val	%REC	LowLimit	HighLimit	%RPD	RPDLimit	Qual
Nitrogen, Nitrate (As N)	2.5	0.10	2.500	0	99.7	90	110			

Qualifiers:

*	Value exceeds Maximum Contaminant Level.	B	Analyte detected in the associated Method Blank
D	Sample Diluted Due to Matrix	E	Value above quantitation range
H	Holding times for preparation or analysis exceeded	J	Analyte detected below quantitation limits
ND	Not Detected at the Reporting Limit	P	Sample pH Not In Range
PQL	Practical Quanitative Limit	RL	Reporting Limit
S	% Recovery outside of range due to dilution or matrix		

HALL ENVIRONMENTAL ANALYSIS LABORATORY

Hall Environmental Analysis Laboratory
4901 Hawkins NE
Albuquerque, NM 87109
TEL: 505-345-3975 FAX: 505-345-4107
Website: www.hallenvironmental.com

Sample Log-In Check List

Client Name: John McCatharn Work Order Number: 1908165 RcptNo: 1

Received By: Erin Melendrez 8/5/2019 11:00:00 AM
Completed By: Erin Melendrez 8/5/2019 11:57:40 AM
Reviewed By: LB 8/5/19 1215

Chain of Custody

1. Is Chain of Custody complete? Yes ☑ No ☐ Not Present ☐
2. How was the sample delivered? Client

Log In

3. Was an attempt made to cool the samples? Yes ☑ No ☐ NA ☐
4. Were all samples received at a temperature of >0° C to 6.0°C Yes ☐ No ☑ NA ☐
   Samples were collected the same day and chilled.
5. Sample(s) in proper container(s)? Yes ☑ No ☐
6. Sufficient sample volume for indicated test(s)? Yes ☑ No ☐
7. Are samples (except VOA and ONG) properly preserved? Yes ☑ No ☐
8. Was preservative added to bottles? Yes ☐ No ☑ NA ☐
9. VOA vials have zero headspace? Yes ☐ No ☐ No VOA Vials ☑
10. Were any sample containers received broken? Yes ☐ No ☑
11. Does paperwork match bottle labels? Yes ☑ No ☐
    (Note discrepancies on chain of custody)
12. Are matrices correctly identified on Chain of Custody? Yes ☑ No ☐
13. Is it clear what analyses were requested? Yes ☑ No ☐
14. Were all holding times able to be met? Yes ☑ No ☐
    (If no, notify customer for authorization.)

# of preserved bottles checked for pH: _____ (≤2 or >12 unless noted)
Adjusted? _____
Checked by: DAD 8/5/19

Special Handling (if applicable)

15. Was client notified of all discrepancies with this order? Yes ☐ No ☐ NA ☑

Person Notified: _____ Date: _____
By Whom: _____ Via: ☐ eMail ☐ Phone ☐ Fax ☐ In Person
Regarding: _____
Client Instructions: _____

16. Additional remarks:

17. **Cooler Information**

Cooler No	Temp °C	Condition	Seal Intact	Seal No	Seal Date	Signed By
1	14.3	Good	Not Present			

Chain-of-Custody Record

Client: John McCathern

Mailing Address: P.O. Box 19306
Alb., NM 87119-0306

Phone #: 505-366-4219

email or Fax#:

QA/QC Package:
☐ Standard ☐ Level 4 (Full Validation)

Accreditation: ☐ Az Compliance
☐ NELAC ☐ Other

☐ EDD (Type)

Turn-Around Time:
☐ Standard ☐ Rush

Project Name: McCathern Dairy

Project #: Monitor Well #5

Project Manager: John McCathern

Sampler: John McCathern

On Ice: ☒ Yes ☐ No

# of Coolers:

Cooler Temp (including CF): 14.4-0.1(CF)= 14.3 (°C)

HALL ENVIRONMENTAL ANALYSIS LABORATORY

www.hallenvironmental.com

4901 Hawkins NE - Albuquerque, NM 87109

Tel. 505-345-3975 Fax 505-345-4107

Analysis Request

Date	Time	Matrix	Sample Name	Container Type and #	Preservative Type	HEAL No. 1908165	BTEX / MTBE / TMB's (8021)	TPH:8015D(GRO / DRO / MRO)	8081 Pesticides/8082 PCB's	EDB (Method 504.1)	PAHs by 8310 or 8270SIMS	RCRA 8 Metals	Cl, F, Br, NO_3, NO_2, PO_4, SO_4	8260 (VOA)	8270 (Semi-VOA)	Total Coliform (Present/Absent)
8/5/19	10:07 AM	Aq	Monitor Well #5			-001							X			

Date:	Time:	Relinquished by:	Received by:	Via:	Date	Time
8/5/19	11:00			CDO	8/5/19	1100
Date:	Time:	Relinquished by:	Received by:	Via:	Date	Time

Remarks:

If necessary, samples submitted to Hall Environmental may be subcontracted to other accredited laboratories. This serves as notice of this possibility. Any sub-contracted data will be clearly notated on the analytical report.

APPENDIX D

PUMP AND SPRINKLER SPECIFICATIONS

SPRINKLER SPECIFICATIONS
FORMER McCATHARN DAIRY

Irrigation Area	Rotation	Sprinklers	Rainbird Model	Nozzle	Suction Lift	Discharge Pressure	Flowrate	Adjusted Flowrate	Radius of Throw	Per Circuit	Total Flowrate	Comments
3.56 Acres	Full	3,4,5,6	85EHD	11/16"	15	60	97.8	84.1	104	1	84.1	Full circle main irrigation area
	Half	1,8	85EHD	1/2"	15	50	48.1	41.4	87	1	41.4	Half Circles
	Full	2,7	85EHD	11/16"	15	50	88.9	76.5	97	1	76.5	Full with End (117.9 gpm combined)
1.32 Acres	Full	10-16	14070H	9/32"	15	50	16.3	14.0	59	7	98.1	Full circles
	Half	9,17	2045PJ	3/16"	15	50	7.5	6.5	45	2	12.9	Half Circles
												111 gpm total (one circuit)

85EHD Tough Bird®

1 1/4" 32 mm Full or Part Circle, Brass Impact Sprinklers

- Heavy duty brass construction
- Stainless steel wear buttons, springs and fulcrum pin
- Locking stainless steel trip collars

Features

- Chemically resistant washers
- Full or Part Circle operation

Benefits

- Internal straightening vane increases distance of throw
- Stainless steel buttons protect trip mechanism from wear
- Corrosion and grit resistant
- Built to last
- Five-year Customer Satisfaction Policy

Specifications

- Bearing: 1 1/4" (32mm) Male NPT, Brass
- Trajectory Angle: 23°
- Operating Range: 25-100 psi (1.7-6.9 bar)
- Flow Rate: 17.1-127.7 gpm (3.88-29 m^3/h)
- Radius: 61-116 ft. (18.6-35.4 meters)
- Nozzle Port: 3/4" Female NPT
- Spreader Nozzle Port: 1/8" Female NPT

Straight Bore Nozzle (SBN-5) with Plug Performance*

	NOZZLE SIZE (Stream Height: 14 ft.)																	
	11/32"		3/8"		13/32"		7/16"		15/32"		1/2"		17/32"		9/16"		5/8"		11/16"	
psi@ Nozzle	Rad. (ft.)	Flow (gpm)	Rad. (ft.)	Flow (gpm)	Rad. (ft.)	Flow (gpm)	Rad. (ft.)	Flow (gpm)	Rad. (ft.)	Flow (gpm)	Rad. (ft.)	Flow (gpm)	Rad. (ft.)	Flow (gpm)	Rad. (ft.)	Flow (gpm)	Rad. (ft.)	Flow (gpm)	Rad. (ft.)	Flow (gpm)
25	61	17.10	62	20.30	64	23.40	66	26.70	66	30.30	66	33.80	66	37.10	66	42.30	66	51.50	66	61.90
30	64	18.80	65	22.30	68	25.70	69	29.30	72	33.20	73	37.10	73	40.80	73	46.40	73	56.50	73	68.10
35	67	20.30	68	24.10	72	27.80	74	31.70	77	35.90	79	40.10	79	44.10	79	50.20	79	61.10	79	73.80
40	69	21.80	71	25.80	75	29.70	77	33.90	80	38.50	83	42.90	83	47.20	86	53.70	86	65.40	86	79.20
45	71	23.10	73	27.40	77	31.60	79	36.00	82	40.80	85	45.60	88	50.10	90	57.10	92	69.50	92	84.20
50	73	24.40	75	28.90	79	33.30	81	38.00	84	43.10	87	48.10	90	52.90	94	60.20	95	73.30	97	88.90
55	75	25.50	77	30.30	81	34.90	83	39.70	86	45.30	89	50.30	92	55.60	96	63.20	99	77.30	100	93.50
60	77	25.80	79	30.80	83	35.90	86	41.60	88	47.40	91	53.00	94	58.80	97	65.50	101	80.10	104	97.80
65	79	26.90	81	32.00	84	37.40	87	43.30	90	49.90	93	55.30	96	61.20	99	69.40	102	84.40	106	102.00
70	81	28.10	83	33.30	86	38.90	89	45.10	91	51.40	94	57.50	98	63.50	101	72.20	104	87.80	108	106.00
75	82	29.20	84	34.50	87	40.30	90	46.80	93	53.30	96	59.60	99	65.80	102	74.90	105	91.00	109	109.90
80	83	30.40	86	35.70	89	41.80	92	48.40	94	55.10	97	61.60	101	68.10	104	77.50	107	94.10	110	113.70
85	85	31.50	87	37.00	90	43.20	93	50.00	96	56.90	99	63.50	102	70.30	105	80.00	108	97.10	112	117.30
90	86	32.70	89	38.30	92	44.60	95	51.50	97	58.50	100	65.30	104	72.40	106	82.20	110	99.90	113	120.90
95	87	33.90	90	39.50	93	46.00	96	53.00	98	60.00	101	67.10	105	74.40	108	84.30	111	102.60	115	124.30
100	88	34.00	91	40.70	94	47.40	97	54.50	99	61.50	102	68.90	106	76.40	109	87.20	112	105.20	116	127.70

Straight Bore Nozzle (SBN-5) and Spreader (LAN-1-20) Performance*

	NOZZLE SIZE (Stream Height: 14 ft.)									
	11/32" x 7/32-20°		3/8" x 7/32-20°		13/32" x 7/32-20°		7/16" x 7/32-20°		15/32" x 7/32-20°	
psi@ Nozzle	Rad. (ft.)	Flow (gpm)	Rad. (ft.)	Flow (gpm)	Rad. (ft.)	Flow (gpm)	Rad. (ft.)	Flow (gpm)	Rad. (ft.)	Flow (gpm)
25	61	23.30	62	26.50	64	29.60	66	32.90	66	36.40
30	64	25.60	65	29.10	68	32.40	69	36.10	72	40.00
35	67	27.70	68	31.40	72	35.10	74	39.00	77	43.30
40	69	29.60	71	33.60	75	37.60	77	41.80	80	46.30
45	71	31.50	73	35.70	77	39.90	79	44.40	82	49.20
50	73	33.20	75	37.70	79	42.10	81	46.80	84	51.90
55	75	34.90	77	39.70	81	44.30	83	49.10	86	54.70
60	77	36.50	79	41.40	83	46.60	86	51.50	88	57.20
65	79	38.00	81	43.20	84	48.60	87	53.80	90	59.80
70	81	40.10	83	44.90	86	50.40	89	55.90	91	62.10
75	82	41.00	84	46.70	87	52.40	90	57.90	93	64.30
80	83	42.60	86	48.30	89	54.30	92	60.00	94	66.70
85	85	43.80	87	49.80	90	56.00	93	62.00	96	68.80
90	86	45.70	89	51.40	92	57.90	95	63.90	97	70.70
95	87	46.60	90	53.00	93	59.60	96	65.80	98	72.80
100	88	47.90	91	54.50	94	61.20	97	67.50	99	74.80

* Nozzles must be purchased separately.
See Chart below.

Part Numbers and Ordering Information

Sprinkler Only	
Sprinkler without Nozzle without Plug	**A23600**

Nozzle Only			XX = Nozzle Size										
		U.S. Standard	**7/32"**	**11/32"**	**3/8"**	**13/32"**	**7/16"**	**15/32"**	**1/2"**	**17/32"**	**9/16"**	**5/8"**	**11/16"**
		Metric	**5.56mm**	**8.7mm**	**9.5mm**	**10.3mm**	**11.1mm**	**11.9mm**	**12.7mm**	**13.5mm**	**14.3mm**	**15.9mm**	**17.5mm**
Brass Straight Bore Nozzle	**SBN-5**	**103043-XX**	–	**22**	**24**	**26**	**28**	**30**	**32**	**34**	36	40	44
Brass 20° Low Angle Spreader Nozzle	**LAN-1-20**	**100226-XX**	**14**	–	–	–	–	–	–	–	–	–	–
1/8" Male NPT Plug for Spreader port		**100255**											

Bold nozzle size number denotes the most common nozzle choice.

Straight Bore Nozzle (SBN-5) with Plug Performance* — METRIC

NOZZLE SIZE (Stream Height: 4.3m)

bar @ Nozzle	8.7 mm (11/32") Rad. (m)	Flow (l/s)	Flow (m³/h)	9.5 mm (3/8") Rad. (m)	Flow (l/s)	Flow (m³/h)	10.3 mm (13/32") Rad. (m)	Flow (l/s)	Flow (m³/h)	11.1 mm (7/16") Rad. (m)	Flow (l/s)	Flow (m³/h)	11.9 mm (15/32") Rad. (m)	Flow (l/s)	Flow (m³/h)
1.7	18.6	1.08	3.88	18.9	1.28	4.61	19.5	1.48	5.31	20.1	1.68	6.06	20.1	1.91	6.88
2.0	19.3	1.16	4.19	19.6	1.38	4.97	20.5	1.59	5.73	20.8	1.82	6.53	21.6	2.06	7.41
2.5	20.6	1.30	4.69	21.0	1.55	5.57	22.2	1.78	6.42	22.8	2.03	7.32	23.7	2.31	8.30
3.0	21.5	1.43	5.16	22.1	1.70	6.11	23.3	1.96	7.05	23.9	2.23	8.03	24.8	2.53	9.11
3.5	22.3	1.55	5.58	22.9	1.84	6.61	24.2	2.12	7.62	24.8	2.41	8.69	25.7	2.74	9.86
4.0	23.2	1.62	5.83	23.8	1.93	6.95	25.1	2.24	8.06	25.8	2.58	9.27	26.6	2.94	10.57
4.5	24.1	1.70	6.12	24.7	2.02	7.28	25.6	2.36	8.51	26.5	2.74	9.85	27.4	3.15	11.35
5.0	24.8	1.81	6.51	25.4	2.14	7.70	26.4	2.50	8.99	27.3	2.90	10.43	28.0	3.30	11.89
5.5	25.3	1.91	6.89	26.2	2.25	8.09	27.1	2.63	9.47	28.0	3.05	10.97	28.6	3.47	12.49
6.0	26.0	2.02	7.26	26.8	2.37	8.52	27.7	2.76	9.94	28.6	3.19	11.49	29.4	3.63	13.07
6.5	26.5	2.13	7.66	27.4	2.48	8.93	28.3	2.89	10.40	29.2	3.33	11.98	29.8	3.77	13.57
6.9	26.8	2.15	7.72	27.7	2.57	9.24	28.7	2.99	10.77	29.6	3.44	12.38	30.2	3.88	13.97

NOZZLE SIZE (Stream Height: 4.3m)

bar @ Nozzle	12.7 mm (1/2") Rad. (m)	Flow (l/s)	Flow (m³/h)	13.5 mm (17/32") Rad. (m)	Flow (l/s)	Flow (m³/h)	14.3 mm (9/16") Rad. (m)	Flow (l/s)	Flow (m³/h)	15.9 mm (5/8") Rad. (m)	Flow (l/s)	Flow (m³/h)	17.5 mm (11/16") Rad. (m)	Flow (l/s)	Flow (m³/h)
1.7	20.1	2.13	7.68	20.1	2.34	8.43	20.1	2.67	9.61	20.1	3.25	11.70	20.1	3.91	14.06
2.0	21.8	2.30	8.27	21.8	2.53	9.10	21.8	2.87	10.35	21.8	3.50	12.60	21.8	4.22	15.18
2.5	24.4	2.57	9.26	24.4	2.83	10.19	24.6	3.22	11.60	24.6	3.92	14.12	24.6	4.74	17.06
3.0	25.7	2.83	10.17	26.4	3.11	11.18	27.1	3.54	12.73	27.5	4.31	15.50	27.5	5.22	18.78
3.5	26.6	3.05	11.00	27.5	3.36	12.10	28.7	3.83	13.77	29.1	4.66	16.78	29.7	5.65	20.34
4.0	27.5	3.27	11.79	28.4	3.63	13.06	29.4	4.07	14.66	30.5	4.98	17.93	31.2	6.06	21.82
4.5	28.4	3.49	12.58	29.3	3.87	13.92	30.2	4.39	15.79	31.1	5.33	19.20	32.3	6.45	23.21
5.0	29.0	3.69	13.29	30.0	4.08	14.68	30.9	4.64	16.70	31.8	5.64	20.30	33.1	6.81	24.51
5.5	29.5	3.88	13.96	30.7	4.29	15.44	31.7	4.88	17.57	32.6	5.93	21.33	33.5	7.16	25.77
6.0	30.3	4.05	14.58	31.3	4.49	16.15	32.1	5.10	18.37	33.2	6.20	22.30	34.3	7.49	26.96
6.5	30.7	4.22	15.17	32.0	4.67	16.83	32.8	5.30	19.07	33.8	6.45	23.21	35.0	7.81	28.11
6.9	31.1	4.35	15.65	32.3	4.82	17.35	33.2	5.50	19.81	34.1	6.64	23.89	35.4	8.06	29.00

Straight Bore Nozzle (SBN-5) and Spreader (LAN-1-20) Performance* — METRIC

NOZZLE SIZE (Stream Height: 4.3m)

bar @ Nozzle	8.7 mm x 5.56 mm (11/32" x 7/32") 20° Rad. (m)	Flow (l/s)	Flow (m³/h)	9.5 mm x 5.56 mm (3/8" x 7/32") 20° Rad. (m)	Flow (l/s)	Flow (m³/h)	10.3 mm x 5.56 mm (13/32" x 7/32") 20° Rad. (m)	Flow (l/s)	Flow (m³/h)	11.1 mm x 5.56 mm (7/16" x 7/32") 20° Rad. (m)	Flow (l/s)	Flow (m³/h)	11.9 mm x 5.56 mm (15/32" x 7/32") 20° Rad. (m)	Flow (l/s)	Flow (m³/h)
1.7	18.6	1.47	5.29	18.9	1.67	6.02	19.5	1.87	6.72	20.1	2.08	7.47	20.1	2.30	8.27
2.0	19.3	1.59	5.71	19.6	1.80	6.49	20.5	2.01	7.23	20.8	2.24	8.05	21.6	2.48	8.92
2.5	20.6	1.78	6.40	21.0	2.02	7.25	22.2	2.25	8.11	22.8	2.50	9.01	23.7	2.78	10.00
3.0	21.5	1.95	7.02	22.1	2.21	7.96	23.3	2.47	8.90	23.9	2.75	9.90	24.8	3.05	10.97
3.5	22.3	2.11	7.60	22.9	2.40	8.63	24.2	2.68	9.63	24.8	2.97	10.71	25.7	3.30	11.88
4.0	23.2	2.26	8.14	23.8	2.57	9.25	25.1	2.88	10.37	25.8	3.19	11.48	26.6	3.54	12.76
4.5	24.1	2.40	8.65	24.7	2.73	9.83	25.6	3.07	11.06	26.5	3.40	12.24	27.4	3.78	13.60
5.0	24.8	2.56	9.21	25.4	2.89	10.40	25.5	3.24	11.67	27.3	3.59	12.92	28.0	3.99	14.35
5.5	25.3	2.68	9.65	26.2	3.04	10.95	27.0	3.42	12.31	28.0	3.78	13.60	28.6	4.20	15.12
6.0	26.0	2.81	10.12	26.8	3.18	11.45	27.7	3.58	12.89	28.6	3.96	14.25	29.4	4.39	15.79
6.5	26.5	2.93	10.55	27.4	3.33	11.98	28.3	3.74	13.48	29.2	4.13	14.88	29.8	4.57	16.46
6.9	26.8	3.02	10.88	27.7	3.44	12.38	28.7	3.86	13.90	29.6	4.26	15.33	30.2	4.72	16.99

* Nozzles must be purchased separately. See chart on previous page.

14070H

3/4" 19mm Full Circle, Brass Impact Sprinkler

- Heavy duty brass construction
- Extra large body and barrel
- Stainless steel springs and fulcrum pin

Features

- Chemically resistant washers
- Dual nozzle ports

Benefits

- Extra large body accommodates wide range of flow rates and nozzles
- Long nozzle barrel increases distance of throw
- Corrosion and grit resistant
- Built to last
- Five-year Customer Satisfaction Policy

Specifications

- Bearing: 3/4" (19mm) Male NPT, Brass
- Trajectory Angle: 27°
- Operating Range: 25-80 psi (1.7-5.5 bar)
- Flow Rate: 4.2-23 gpm (0.97-5.34 m^3/h)
- Radius: 44-71 ft. (13.57-22.10 meters)
- Nozzle Port: 1/4" Female NPT
- Spreader Nozzle Port: 1/8" Female NPT

Straight Bore Nozzle (SBN-3) with Spreader (LAN-1-20)*

	NOZZLE SIZE (Stream Height: 10 ft.)													
	3/16" x 1/8-20°		13/64" x 1/8-20°		7/32" x 1/8-20°		15/64" x 1/8-20°		1/4" x 1/8-20°		17/64" x 1/8-20°		9/32" x 1/8-20°	
psi@ Nozzle	Rad. (ft.)	Flow (gpm)	Rad. (ft.)	Flow (gpm)	Rad. (ft.)	Flow (gpm)	Rad. (ft.)	Flow (gpm)	Rad. (ft.)	Flow (gpm)	Rad. (ft.)	Flow (gpm)	Rad. (ft.)	Flow (gpm)
25	44	7.40	45	8.30	46	9.20	46	10.30	47	11.40	47	12.50	48	13.80
30	47	8.10	48	9.10	49	10.10	50	11.20	51	12.40	51	13.70	52	15.10
35	49	8.70	50	9.80	51	10.90	52	12.10	52	13.40	53	14.80	54	16.30
40	50	9.30	51	10.50	52	11.70	53	13.00	54	14.40	55	15.80	56	17.40
45	51	9.90	52	11.10	54	12.40	55	13.80	56	15.20	57	16.80	58	18.50
50	52	10.40	53	11.70	55	13.10	56	14.50	57	16.10	58	17.70	59	19.50
55	53	10.90	54	12.30	56	13.70	57	15.20	59	16.90	59	18.60	61	20.40
60	53	11.40	55	12.80	57	14.30	58	15.90	60	17.60	61	19.40	62	21.30
65	54	11.90	56	13.30	58	14.90	59	16.50	61	18.30	62	20.20	63	22.20
70	55	12.40	57	13.80	59	15.40	60	17.20	62	19.00	63	21.00	65	23.00
75	55	12.80	58	14.30	60	16.00	61	17.80	63	19.70	-	-	-	-
80	56	13.20	58	14.80	61	16.50	62	18.40	64	20.30	-	-	-	-

Straight Bore Nozzle (SBN-3V) with Plug*

	NOZZLE SIZE (Stream Height: 10 ft.)																	
	5/32"		11/64"		3/16"		13/64"		7/32"		15/64"		1/4"		17/64"		9/32"	
psi@ Nozzle	Rad. (ft.)	Flow (gpm)	Rad. (ft.)	Flow (gpm)	Rad. (ft.)	Flow (gpm)	Rad. (ft.)	Flow (gpm)	Rad. (ft.)	Flow (gpm)	Rad. (ft.)	Flow (gpm)	Rad. (ft.)	Flow (gpm)	Rad. (ft.)	Flow (gpm)	Rad. (ft.)	Flow (gpm)
25	-	-	-	-	44	5.10	45	6.00	46	7.00	46	8.00	47	9.10	48	10.30	48	11.50
30	-	-	-	-	47	5.60	48	6.60	49	7.60	50	8.80	51	10.00	51	11.20	52	12.60
35	46	4.20	47	5.10	49	6.10	50	7.10	51	8.20	52	9.50	52	10.80	53	12.10	54	13.60
40	46	4.50	48	5.40	50	6.50	51	7.60	52	8.80	53	10.10	54	11.50	55	13.00	56	14.60
45	47	4.80	49	5.80	51	6.90	52	8.10	54	9.30	55	10.70	56	12.20	57	13.80	58	15.40
50	48	5.00	50	6.10	52	7.20	53	8.50	55	9.80	56	11.30	57	12.90	58	14.50	59	16.30
55	48	5.30	50	6.40	53	7.60	54	8.90	56	10.30	54	11.80	59	13.50	59	15.20	61	17.10
60	49	5.50	51	6.70	53	7.90	55	9.30	57	10.80	58	12.40	60	14.10	61	15.90	62	17.80
65	49	5.70	52	6.90	54	8.30	56	9.70	58	11.20	59	12.90	61	14.70	62	16.50	63	18.50
70	50	5.90	52	7.20	55	8.60	57	10.00	59	11.60	60	13.40	62	15.20	63	17.20	65	19.20
75	50	6.20	53	7.40	55	8.90	58	10.40	60	12.10	61	13.80	63	15.70	-	-	-	-
80	50	6.40	53	7.70	56	9.10	58	10.70	61	12.40	62	14.30	64	16.30	-	-	-	-

Straight Bore Nozzle with Vane (SBN-3V) with Spreader (LAN-1-20)*

	NOZZLE SIZE (Stream Height: 10 ft.)													
	3/16" x 1/8-20°		13/64" x 1/8-20°		7/32" x 1/8-20°		15/64" x 1/8-20°		1/4" x 1/8-20°		17/64" x 1/8-20°		9/32" x 1/8-20°	
psi@ Nozzle	Rad. (ft.)	Flow (gpm)	Rad. (ft.)	Flow (gpm)	Rad. (ft.)	Flow (gpm)	Rad. (ft.)	Flow (gpm)	Rad. (ft.)	Flow (gpm)	Rad. (ft.)	Flow (gpm)	Rad. (ft.)	Flow (gpm)
25	47	7.40	49	8.30	51	9.20	51	9.80	51	10.80	51	11.90	51	13.10
30	50	8.10	51	9.10	54	10.10	54	10.60	55	11.80	55	13.00	55	14.30
35	51	8.70	53	9.80	55	10.90	56	11.50	57	12.70	57	14.10	57	15.50
40	52	9.30	54	10.50	56	11.70	57	12.40	59	13.70	59	15.00	60	16.50
45	53	9.90	55	11.10	57	12.40	59	13.10	60	14.40	61	16.00	62	17.60
50	53	10.40	56	11.70	58	13.10	60	13.80	62	15.30	63	16.80	64	18.50
55	54	10.90	56	12.30	59	13.70	61	14.40	63	16.10	65	17.70	66	19.40
60	55	11.40	57	12.80	60	14.30	62	15.10	64	16.70	67	18.40	68	20.20
65	55	11.90	58	13.30	61	14.90	63	15.70	65	17.40	68	19.20	69	21.10
70	56	12.40	58	13.80	62	15.40	64	16.30	66	18.10	69	20.00	71	21.90
75	56	12.80	59	14.30	62	16.00	65	16.90	67	18.70	-	-	-	-
80	57	13.20	60	14.80	63	16.50	66	17.50	69	19.30	-	-	-	-

* Nozzles must be purchased separately. See chart below.

Part Numbers and Ordering Information

Sprinkler Only	
Sprinkler without Nozzle without Plug	**A12800**

Nozzle Only			XX = Nozzle Size									
		U.S. Standard	**1/8"**	**5/32"**	**11/64"**	**3/16"**	**13/64"**	**7/32"**	**15/64"**	**1/4"**	**17/64"**	**9/32"**
Brass Straight Bore Nozzle	**SBN-3**	**105842-XX**	–	10	11	**12**	13	14	15	16	17	18
Brass Straight Bore Nozzle with Vane	**SBN-3V**	**106131-XX**	–	10	11	**12**	13	14	15	16	17	18
Brass 20° Low Angle Spreader Nozzle	**LAN-1-20**	**100226-XX**	**08**	–	–	–	–	–	–	–	–	–
Brass Plug		**100255**										

Bold nozzle size number denotes the most common nozzle choice.

14070H (Continued)

Straight Bore Nozzle (SBN-3) with Spreader (LAN-1-20)* — METRIC

NOZZLE SIZE (Stream Height: 3m)

bar @ Nozzle	4.76 mm x 3.18 mm (3/16″ x 1/8″) 20°			5.16 mm x 3.18 mm (13/64″ x 1/8″) 20°			5.56 mm x 3.18 mm (7/32″ x 1/8″) 20°			5.95 mm x 3.18 mm (15/64″ x 1/8″) 20°			6.35 mm x 3.18 mm (1/4″ x 1/8″) 20°			6.75 mm x 3.18 mm (17/64″ x 1/8″) 20°			7.14 mm x 3.18 mm (9/32″ x 1/8″) 20°		
	Rad. (m)	Flow (lps)	Flow (m^3/h)	Rad. (m)	Flow (lps)	Flow (m^3/h)	Rad. (m)	Flow (lps)	Flow (m^3/h)	Rad. (m)	Flow (lps)	Flow (m^3/h)	Rad. (m)	Flow (lps)	Flow (m^3/h)	Rad. (m)	Flow (lps)	Flow (m^3/h)	Rad. (m)	Flow (lps)	Flow (m^3/h)
1.7	13.6	0.47	1.68	13.9	0.52	1.89	14.0	0.58	2.09	14.2	0.65	2.34	14.3	0.72	2.59	14.5	0.79	2.84	14.6	0.87	3.13
2.0	14.3	0.50	1.81	14.6	0.56	2.03	14.9	0.63	2.25	15.0	0.70	2.50	15.3	0.77	2.77	15.4	0.85	3.06	15.6	0.94	3.37
2.5	15.0	0.56	2.01	15.4	0.63	2.26	15.7	0.70	2.52	16.0	0.78	2.80	16.2	0.86	3.10	16.4	0.95	3.42	16.6	1.05	3.76
3.0	15.5	0.61	2.21	15.9	0.69	2.48	16.3	0.77	2.77	16.6	0.86	3.08	16.9	0.94	3.40	17.2	1.04	3.75	17.5	1.15	4.13
3.5	15.9	0.66	2.38	16.4	0.74	2.68	16.8	0.83	3.00	17.1	0.92	3.32	17.6	1.02	3.68	17.9	1.12	4.05	18.2	1.24	4.46
4.0	16.2	0.71	2.54	16.8	0.79	2.86	17.4	0.89	3.19	17.7	0.99	3.55	18.2	1.09	3.93	18.4	1.20	4.33	18.9	1.32	4.75
4.5	16.6	0.75	2.71	17.2	0.84	3.03	17.8	0.94	3.39	18.1	1.04	3.75	18.6	1.16	4.16	19.1	1.28	4.60	19.4	1.40	5.05
5.0	16.8	0.79	2.86	17.5	0.89	3.19	18.1	0.99	3.56	18.6	1.10	3.97	19.1	1.22	4.39	19.6	1.35	4.86	19.9	1.48	5.34
5.5	17.2	0.83	3.00	17.8	0.93	3.36	18.6	1.04	3.75	19.1	1.16	4.18	19.7	1.28	4.61	-	-	-	-	-	-

Straight Bore Nozzle (SBN-3V) with Plug* — METRIC

NOZZLE SIZE (Stream Height: 3m)

bar @ Nozzle	3.97 mm (5/32″)			4.37 mm (11/64″)			4.76 mm (3/16″)			5.16 mm (13/64″)			5.56 mm (7/32″)			5.95 mm (15/64″)			6.35 mm (1/4″)			6.75 mm (17/64″)			7.14 mm (9/32″)		
	Rad. (m)	Flow (lps)	Flow (m^3/h)	Rad. (m)	Flow (lps)	Flow (m^3/h)	Rad. (m)	Flow (lps)	Flow (m^3/h)	Rad. (m)	Flow (lps)	Flow (m^3/h)	Rad. (m)	Flow (lps)	Flow (m^3/h)	Rad. (m)	Flow (lps)	Flow (m^3/h)	Rad. (m)	Flow (lps)	Flow (m^3/h)	Rad. (m)	Flow (lps)	Flow (m^3/h)	Rad. (m)	Flow (lps)	Flow (m^3/h)
1.7	-	-	-	-	-	-	13.6	0.32	1.16	13.9	0.38	1.36	14.0	0.44	1.59	14.2	0.50	1.82	14.3	0.57	2.07	14.5	0.65	2.34	14.6	0.73	2.61
2.0	-	-	-	-	-	-	14.3	0.35	1.25	14.6	0.41	1.47	14.9	0.47	1.70	15.0	0.54	1.96	15.3	0.62	2.23	15.4	0.70	2.50	15.6	0.78	2.81
2.5	14.1	0.27	0.97	14.4	0.33	1.18	15.0	0.39	1.41	15.4	0.46	1.64	15.7	0.53	1.90	16.0	0.61	2.19	16.2	0.69	2.49	16.4	0.78	2.80	16.6	0.87	3.14
3.0	14.3	0.30	1.07	14.8	0.36	1.29	15.5	0.43	1.54	15.9	0.50	1.81	16.3	0.58	2.08	16.6	0.66	2.39	16.9	0.76	2.72	17.2	0.86	3.08	17.5	0.96	3.44
3.5	14.7	0.32	1.15	15.3	0.39	1.40	15.9	0.46	1.65	16.4	0.54	1.94	16.8	0.62	2.24	17.1	0.72	2.58	17.6	0.82	2.95	17.9	0.92	3.32	18.2	1.04	3.73
4.0	14.9	0.34	1.23	15.5	0.42	1.49	16.2	0.49	1.77	16.8	0.58	2.08	17.4	0.67	2.41	17.7	0.77	2.76	18.2	0.87	3.15	18.4	0.99	3.55	18.9	1.11	3.98
4.5	15.1	0.36	1.30	15.9	0.44	1.57	16.6	0.52	1.89	17.2	0.61	2.21	17.8	0.71	2.55	18.1	0.82	2.93	18.6	0.93	3.34	19.1	1.04	3.75	19.4	1.17	4.21
5.0	15.2	0.38	1.37	16.1	0.46	1.66	16.8	0.55	1.99	17.5	0.64	2.32	18.1	0.75	2.69	18.6	0.86	3.09	19.1	0.97	3.51	19.6	1.10	3.97	19.8	1.23	4.42
5.5	15.4	0.40	1.45	16.3	0.49	1.75	17.2	0.57	2.07	17.8	0.68	2.43	18.6	0.78	2.82	19.1	0.90	3.25	19.7	1.03	3.70	-	-	-	-	-	-

Straight Bore Nozzle with Vane (SBN-3V) with Spreader (LAN-1-20)* — METRIC

NOZZLE SIZE (Stream Height: 3m)

bar @ Nozzle	4.76 mm x 3.18 mm (3/16″ x 1/8″) 20°			5.16 mm x 3.18 mm (13/64″ x 1/8″) 20°			5.56 mm x 3.18 mm (7/32″ x 1/8″) 20°			5.95 mm x 3.18 mm (15/64″ x 1/8″) 20°			6.35 mm x 3.18 mm (1/4″ x 1/8″) 20°			6.75 mm x 3.18 mm (17/64″ x 1/8″) 20°			7.14 mm x 3.18 mm (9/32″ x 1/8″) 20°		
	Rad. (m)	Flow (lps)	Flow (m^3/h)	Rad. (m)	Flow (lps)	Flow (m^3/h)	Rad. (m)	Flow (lps)	Flow (m^3/h)	Rad. (m)	Flow (lps)	Flow (m^3/h)	Rad. (m)	Flow (lps)	Flow (m^3/h)	Rad. (m)	Flow (lps)	Flow (m^3/h)	Rad. (m)	Flow (lps)	Flow (m^3/h)
1.7	14.5	0.47	1.68	14.9	0.52	1.89	15.5	0.58	2.09	15.5	0.62	2.23	15.7	0.68	2.45	15.5	0.75	2.70	15.5	0.83	2.98
2.0	15.1	0.50	1.81	15.5	0.56	2.03	16.3	0.63	2.25	16.4	0.66	2.37	16.5	0.73	2.63	16.5	0.81	2.90	16.5	0.89	3.19
2.5	15.6	0.56	2.01	16.2	0.63	2.26	17.0	0.70	2.52	17.2	0.74	2.66	17.5	0.82	2.94	17.7	0.90	3.25	17.7	0.99	3.58
3.0	16.1	0.61	2.21	16.7	0.69	2.48	17.4	0.77	2.77	17.8	0.81	2.93	18.3	0.90	3.22	18.6	0.99	3.56	18.7	1.09	3.92
3.5	16.4	0.66	2.38	17.1	0.74	2.68	17.9	0.83	3.00	18.4	0.88	3.15	18.9	0.97	3.50	19.3	1.07	3.85	19.6	1.18	4.23
4.0	16.7	0.71	2.54	17.4	0.79	2.86	18.3	0.89	3.19	18.9	0.93	3.37	19.5	1.04	3.74	20.1	1.14	4.11	20.5	1.25	4.51
4.5	16.9	0.75	2.71	17.7	0.84	3.03	18.8	0.94	3.39	19.4	0.99	3.57	20.0	1.10	3.96	20.7	1.21	4.37	21.2	1.33	4.80
5.0	17.1	0.79	2.86	17.9	0.89	3.19	19.0	0.99	3.56	19.7	1.05	3.77	20.4	1.16	4.18	21.3	1.28	4.62	22.1	1.40	5.05
5.5	17.4	0.83	3.00	18.3	0.93	3.36	19.4	1.04	3.75	20.1	1.10	3.97	21.0	1.22	4.38	-	-	-	-	-	-

* Nozzles must be purchased separately. See chart below.

Part Numbers and Ordering Information

Sprinkler Only	
Sprinkler without Nozzle without Plug	**A12800**

Nozzle Only			XX = Nozzle Size									
		Metric	**3.18 mm**	**3.97 mm**	**4.37 mm**	**4.76 mm**	**5.16 mm**	**5.56 mm**	**5.95 mm**	**6.35 mm**	**6.75 mm**	**7.14 mm**
Brass Straight Bore Nozzle	**SBN-3**	**105842-XX**	–	10	11	**12**	13	14	15	16	17	18
Brass Straight Bore Nozzle with Vane	**SBN-3V**	**106131-XX**	–	10	11	**12**	13	14	15	16	17	18
Brass 20° Low Angle Spreader Nozzle	**LAN-1-20**	**100226-XX**	**08**	–	–	–	–	–	–	–	–	–
Brass Plug		**100255**										

Bold nozzle size number denotes the most common nozzle choice.

2045-PJ

1/2" 13mm Full or Part Circle, Plastic Impact Sprinkler

- Durable Delrin™ plastic, body arm, bearing sleeve, nipple and break up pin
- Stainless steel springs and fulcrum pin
- Chemically resistant washers

Features

- Plastic Quick Fit Nozzles
- Low Angle (10°) Nozzles available
- Integral straightening vane for greater distance
- Full or Part Circle operation

Benefits

- Superior chemical and grit resistance
- Smooth rotation at lower pressures
- Design flexibility
- Built to last
- Two-year Customer Satisfaction Policy

Specifications

- Bearing: 1/2" (13mm) Male NPT, Plastic
- Trajectory Angle: Standard 23° Low Angle 10° available.
- Operating Range: 25-60 psi (1.7-4.1 bar)
- Flow Rate: 1.5-8.4 gpm (0.34-1.91 m³/h)
- Radius: 22-45 ft. (6.7-13.7 meters)
- Nozzle: QuickFit Nozzle Port

Plastic Quick-Fit (PQFN) Performance*

	NOZZLE SIZE (Stream Height: 6 ft.)									
	3/32" Red		7/64" Black		1/8" Blue		5/32" Yellow		3/16" Beige	
psi@ Nozzle	Rad. (ft.)	Flow (gpm)	Rad. (ft.)	Flow (gpm)	Rad. (ft.)	Flow (gpm)	Rad. (ft.)	Flow (gpm)	Rad. (ft.)	Flow (gpm)
25	-	-	32	2.20	35	2.80	38	4.20	39	5.50
35	37	2.00	37	2.70	38	3.30	41	4.80	42	6.30
45	38	2.30	39	3.00	40	3.70	42	5.40	44	7.10
55	38	2.50	41	3.30	41	4.10	43	6.00	45	7.90
60	38	2.60	41	3.50	42	4.20	44	6.40	45	8.40

*Shipped Assembled with a 1/8" (08) Straight Bore Nozzle.

Low Angle Nozzle (PQLAN)

	NOZZLE SIZE (Stream Height: 3 ft.)			
	7/64" Black		5/32" Yellow	
psi@ Nozzle	Rad. (ft.)	Flow (gpm)	Rad. (ft.)	Flow (gpm)
25	22	1.5	25	3.4
35	23	1.9	29	4.0
45	25	2.1	31	4.0
55	25	2.3	32	5.0
60	25	2.4	32	5.4

Plastic Quick-Fit (PQFN) Performance* METRIC

	NOZZLE SIZE (Stream Height: 1.8m)														
	2.38 mm (3/32") Red			2.78 mm (7/64") Black			3.18 mm (1/8") Blue			3.97 mm (5/32") Yellow			4.76 mm (3/16") Beige		
bar @ Nozzle	Rad. (m)	Flow (l/s)	Flow (m³/h)	Rad. (m)	Flow (l/s)	Flow (m³/h)	Rad. (m)	Flow (l/s)	Flow (m³/h)	Rad. (m)	Flow (l/s)	Flow (m³/h)	Rad. (m)	Flow (l/s)	Flow (m³/h)
1.7	-	-	-	9.8	0.14	0.5	10.7	0.18	0.64	11.6	0.26	0.95	11.9	0.35	1.25
2.0	-	-	-	10.4	0.15	0.55	11.0	0.19	0.68	11.9	0.28	1.01	12.3	0.37	1.32
2.5	11.3	0.13	0.46	11.4	0.17	0.62	11.7	0.21	0.76	12.5	0.31	1.11	12.9	0.40	1.45
3.0	11.5	0.14	0.51	11.8	0.19	0.67	12.1	0.23	0.83	12.8	0.34	1.21	13.3	0.44	1.59
3.5	11.6	0.15	0.55	12.2	0.20	0.72	12.4	0.25	0.89	13.0	0.36	1.30	13.6	0.48	1.72
4.0	11.6	0.16	0.58	12.5	0.22	0.78	12.7	0.26	0.94	13.3	0.39	1.42	13.7	0.52	1.86
4.1	11.6	0.16	0.59	12.5	0.22	0.79	12.8	0.26	0.95	13.4	0.40	1.45	13.7	0.53	1.91

Low Angle Nozzle (PQLAN) METRIC

	NOZZLE SIZE (Stream Height: 0.9m)					
	2.78 mm (7/64") Black			3.97 mm (5/32") Yellow		
bar @ Nozzle	Rad. (m)	Flow (l/s)	Flow (m³/h)	Rad. (m)	Flow (l/s)	Flow (m³/h)
1.7	6.7	0.09	0.34	706	0.21	0.77
2.0	6.8	0.10	0.38	8.1	0.23	0.83
2.5	7.1	0.12	0.44	8.9	0.26	0.92
3.0	7.5	0.13	0.47	9.4	0.28	1.01
3.5	7.6	0.14	0.50	9.6	0.30	1.09
4.0	7.6	0.15	0.54	9.8	0.33	1.19
4.1	7.6	0.15	0.54	9.8	0.34	1.23

Part Numbers and Ordering Information

Assembled Sprinkler/Nozzle Factory Combination	
Sprinkler with Nozzle **2045-PJ-AG**	**B4610008**

The assembled sprinkler comes with a blue 1/8" nozzle. Other nozzles are available on request at no charge.

Nozzle Only			XX = Nozzle Size				
		U.S. Standard	3/32"	7/64"	1/8"	5/32"	3/16"
		Metric	2.38 mm	2.78 mm	3.18 mm	3.97 mm	4.76 mm
Plastic Quick-Fit Straight Bore Nozzle	PQFN	206592-XX	06	07	**08**	10	12
Low Angle Quick-Fit Nozzle	PQLAN	115902-XX	–	07	–	10	–

Bold nozzle size number denotes the most common nozzle choice.

STA-RITE® D Series

Self-priming centrifugal pumps

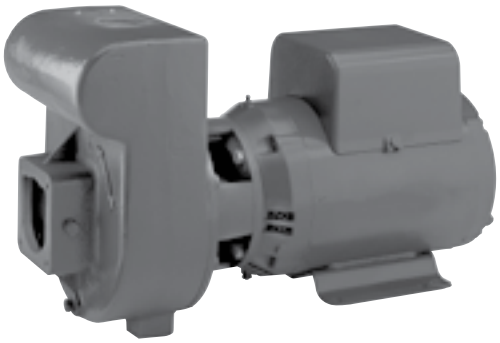

3 and 5 HP

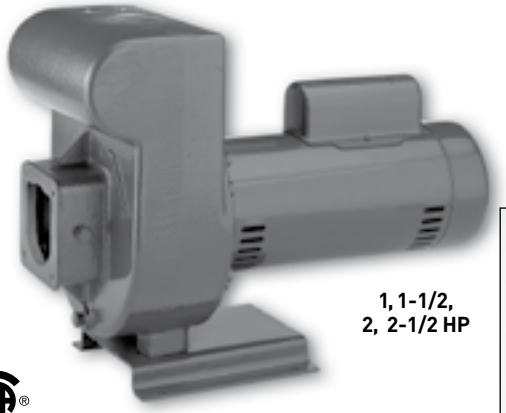

1, 1-1/2,
2, 2-1/2 HP

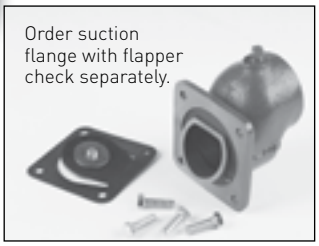

C US
UL778/CSA108

Some of the fastest priming pumps on the market. Available in high head or medium head series. Features mechanical seals, easy service design, heavy-duty motors, rugged construction. Available in 1 through 5 HP.

Optional 6" and 8" Trap Packages are available.

APPLICATIONS

Lawn Sprinkling...operate from 1 to 30 or more heads. Can be safely operated by timer or other automatic device.

Contractors...for dewatering excavation, jetting, water transfer and supply operations.

Agriculture...seed bed and plot irrigation, stock watering, fire protection.

Industrial...sump drainage, fire protection, marine pumping, liquid transfer and supply operations.

SPECIFICATIONS

Body and Base: Close-grained cast iron

Impeller: Noryl® on 1 through 2-1/2 HP, bronze on 3 and 5 HP

Diffuser: Cast iron

Shaft: 1 through 2-1/2 HP: 416 stainless steel; 3 and 5 HP: Carbon steel inside removable shaft sleeve of stainless steel.

FEATURES

1 through 5 HP: Both high head and medium head models offer heavy-duty motors, easy service design, and air volume control tapping.

Drain Port: Provided for easy winterizing.

Medium Head Models: Deliver up to 115' of head with capacities to 159 GPM.

High Head Models: Deliver up to 138' of head with capacities to 162 GPM.

Easy Serviceability: Normal wearing parts are easily accessible for service and replacement, without disturbing piping or mounting.

Heavy-Duty Motors: Designed for continuous operation. Capacitor start, will not cause electrical interference with TV or other appliances. Nationally known motors have ball bearing, stainless steel shaft. For single- and three-phase operation, 3450 RPM.

Noryl® is a registered trademark of General Electric Co.
All other brand or product names are trademarks or registered trademarks of Pentair Ltd.

STA-RITE® D Series

Self-priming centrifugal pumps

ORDERING INFORMATION

Catalog Number	HP	Pipe Tapping Sizes		Motor Voltage	Phase	Approx. Wt. Lbs.
		Suction Flanges*	Pump Discharge			
HIGH HEAD						
DHE	1	PKG 52	1-1/2"	115/230	1	65
DHE3	1	PKG 52	1-1/2"	208-230/460	3	65
DHF	1-1/2	PKG 52	1-1/2"	115/230	1	72
DHF3	1-1/2	PKG 52	1-1/2"	208-230/460	3	72
DHG	2	PKG 53	2"	115/230	1	113
DHG3	2	PKG 53	2"	208-230/460	3	113
DHHG	2-1/2	PKG 53	2"	115/230	1	120
DHHG3	2-1/2	PKG 53	2"	208-230/460	3	120
DHH	3	PKG 53	2"	230	1	144
DHH3	3	PKG 53	2"	208-230/460	3	144
DHJ	5	PKG 72	2"	230	1	184
DHJ3	5	PKG 72	2"	208-230/460	3	184
MEDIUM HEAD						
DMG	2	PKG 52	1-1/2"	115/230	1	86
DMG3	2	PKG 52	1-1/2"	208-230/460	3	86
DMMG	2-1/2	PKG 53	2"	115/230	1	93
DMMG3	2-1/2	PKG 53	2"	208-230/460	3	93
DMH	3	PKG 72	2-1/2"	230	1	137
DMH3	3	PKG 72	2-1/2"	208-230/460	3	137
DMJ	5	PKG 73	3"	230	1	184
DMJ3	5	PKG 73	3"	230/460	3	184

*Suction flanges must be ordered separately. See chart below.

SUCTION FLANGES (Order separately – required for suction tap sizes)

Package 52 -	Package 53 -	Package 72 -	Package 73 -
1-1/2"	2"	2-1/2"	3"

PKG 52 1-1/2" **PKG 53** 2" NPT

PKG 72 2-1/2" **PKG 73** 3" NPT

6" AND 8" TRAP PACKAGES

Catalog Number	Description	Suction Port Size	Approx. Wt. Lbs.
PKG 51	6" Cast Iron Trap with Basket (For C, CC, and D Series Pumps)	2" NPT	20
PKG 76	Cast Iron Flange for Remote Installation	3" NPT	4
PKG 98	8" Cast Iron Trap with Basket (For C, CC, and D Series Pumps)	3" NPT	40

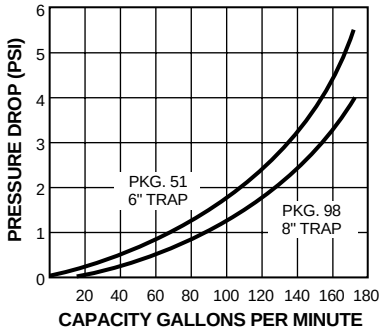

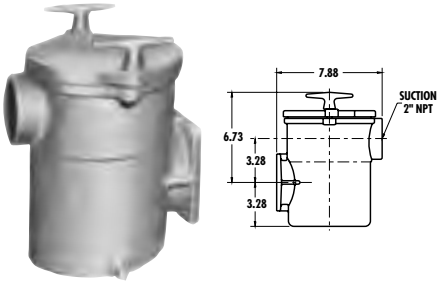

PKG 51
6-INCH TRAP

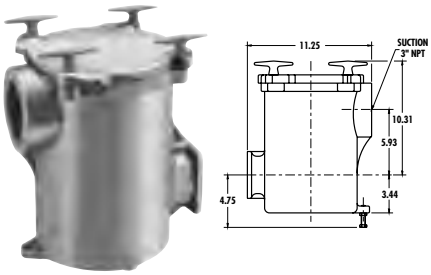

PKG 98
8-INCH TRAP

PKG 76

STA-RITE® D Series

Self-priming centrifugal pumps

PUMP PERFORMANCE: HIGH HEAD

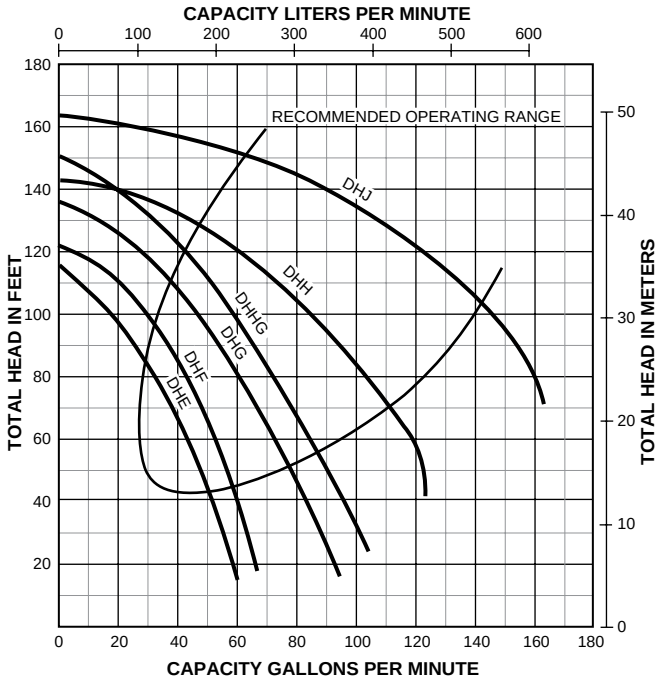

PUMP PERFORMANCE: MEDIUM HEAD

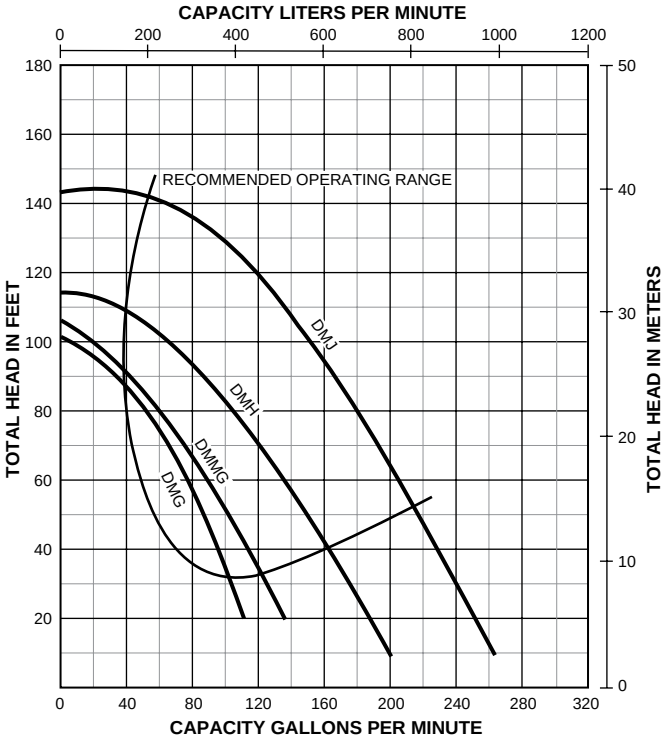

PUMP PERFORMANCE (CAPACITY IN GALLONS PER MINUTE)

Cat. No.	HP	Discharge		Suction Lift in Feet				
		PSI	Feet Head	5'	10'	15'	20'	25'
HIGH HEAD								
DHE	1	20	46.2	46	43	41	40	38
		30	69.3	35	32	29	25	21
		40	92.4	19	15	–	–	–
		50	115.5	–	–	–	–	–
		60	138.6	–	–	–	–	–
DHF	1-1/2	20	46.2	55	53	51	49	48
		30	69.3	45	42	39	36	32
		40	92.4	31	27	22	15	–
		50	115.5	–	–	–	–	–
		60	138.6	–	–	–	–	–
DHG	2	20	46.2	77	74	71	68	65
		30	69.3	63	60	56	53	49
		40	92.4	48	44	40	36	30
		50	115.5	30	20	13	–	–
		60	138.6	–	–	–	–	–
DHHG	2-1/2	20	46.2	89	85	82	80	76
		30	69.3	75	72	68	64	60
		40	92.4	60	57	51	49	42
		50	115.5	42	37	31	25	20
		60	138.6	14	–	–	–	–
DHH	3	20	46.2	–	–	–	112	109
		30	69.3	109	103	98	92	89
		40	92.4	90	75	74	69	62
		50	115.5	62	51	42	32	20
DHJ	5	20	46.2	–	–	–	–	–
		30	69.3	–	–	–	–	–
		40	92.4	146	141	136	130	122
		50	115.5	122	114	105	99	85
		60	138.6	81	70	50	30	–
MEDIUM HEAD								
DMG	2	20	46.2	84	79	74	69	63
		30	69.3	60	53	46	35	20
		40	92.4	22	–	–	–	–
		50	115.5	–	–	–	–	–
DMMG	2-1/2	20	46.2	103	96	90	80	70
		30	69.3	70	60	50	46	30
		40	92.4	30	18	5	–	–
		50	115.5	–	–	–	–	–
DMH	3	20	46.2	149	140	136	124	119
		30	69.3	116	108	99	85	76
		40	92.4	75	65	51	26	–
DMJ	5	20	46.2	214	209	202	194	182
		30	69.3	185	179	172	165	158
		40	92.4	153	146	139	130	120
		50	115.5	119	107	95	80	50

STA-RITE® D Series

Self-priming centrifugal pumps

OUTLINE DIMENSIONS

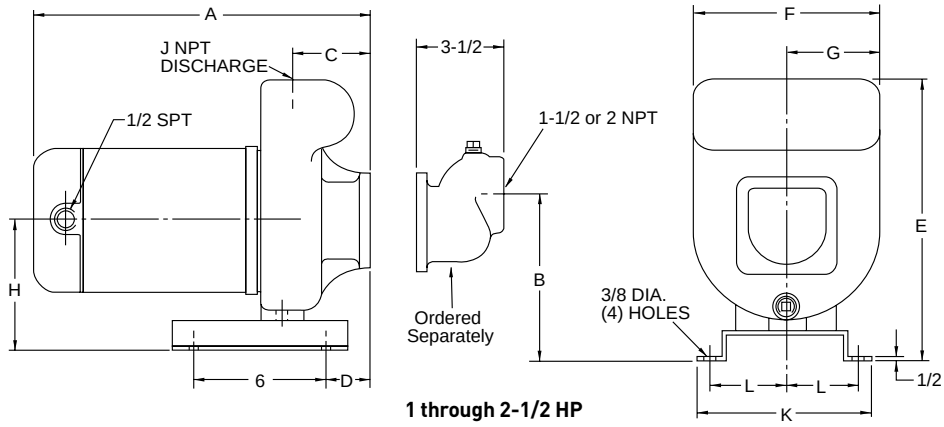

1 through 2-1/2 HP

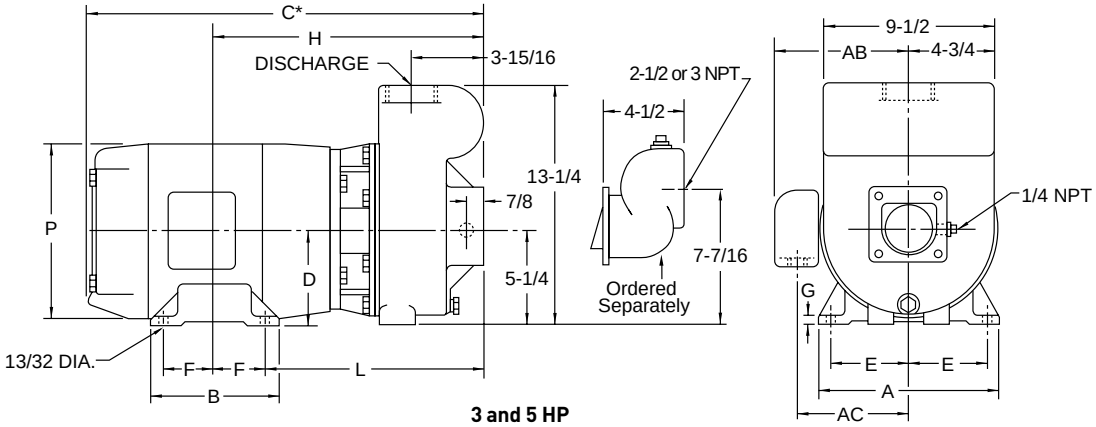

3 and 5 HP

Dimensions (in inches) are for estimating purposes only.

DIMENSIONS IN INCHES: 1 THROUGH 2-1/2 HP

Catalog Number	HP	A	B	C	D	E	F	G	H	J	K	L
DHE	1	14-13/16	7-1/16	3-1/2	4	11-7/8	7-7/8	3-15/16	5-13/16	1-1/2	7-1/2	3-3/8
DHF	1-1/2	15-11/16	7-1/16	3-1/2	4	11-7/8	7-7/8	3-15/16	5-13/16	1-1/2	7-1/2	3-3/8
DHG	2	17-11/16	7-13/16	3-15/16	3-13/16	14-3/8	9-1/2	4-3/4	6-9/16	2	7-1/2	3-3/8
DHHG	2-1/2	18-11/16	7-13/16	3-15/16	3-13/16	14-3/8	9-1/2	4-3/4	6-9/16	2	7-1/2	3-3/8
DMG	2	16-15/16	7-1/16	3-1/2	4	11-7/8	7-7/8	3-15/16	5-13/16	1-1/2	7-1/2	3-3/8
DMMG	2-1/2	17-15/16	7-1/16	3-1/2	4	11-7/8	7-7/8	3-15/16	5-13/16	2	7-1/2	3-3/8

DIMENSIONS IN INCHES: 3 AND 5 HP

Catalog Number	HP	A	B	C*	D	E	F	G	H	L	P	AB	AC
DHH	3	9	6	20-3/4	4-1/2	3-3/4	2-1/4	1/2	15	12-3/4	9-3/4	8-1/8	6-1/2
DHJ	5	9	7	21-3/4	4-1/2	3-3/4	2-3/4	1/2	15-1/2	12-3/4	9-3/4	9	7
DMH	3	9	6	20-3/4	4-1/2	3-3/4	2-1/4	1/2	15	12-3/4	9-3/4	8-1/8	6-1/2
DMJ	5	9	7	21-3/4	4-1/2	3-3/4	2-3/4	1/2	15-1/2	12-3/4	9-3/4	9	7

*Overall length (C) is shown for single-phase motors. Three-phase motors are slightly smaller. Dimensions are for estimating purposes only.

PENTAIR

293 WRIGHT STREET, DELAVAN, WI 53115 WWW.STA-RITE.COM PH: 888-782-7483 ORDERS FAX: 800-426-9446

Because we are continuously improving our products and services, Pentair reserves the right to change specifications without prior notice.

APPENDIX E

PUBLIC NOTICE

FOR ADELANTE MAILERS:

Dear Property Owner:

This is to inform you that Suertudo Development, LLC, has submitted a Stage 2 Abatement Plan (S2AP) for the Former McCatharn Dairy, located at 6363 State Highway 14, Albuquerque, New Mexico. The Stage 2 Abatement Plan has been prepared pursuant to the New Mexico Water Quality Control Commission (NMWQCC) requirements for the treatment of ground water containing nitrate, chloride, and total dissolved solids in excess of the NMWQCC standards.

The submitted Stage 2 Abatement Plan proposal consists of: 1) institutional control in the form of an Office of the State Engineer order to prohibit new wells from being installed in the Abatement Plan Area, 2) pumping contaminated groundwater with irrigation reuse for crop production, and 3) long term monitoring.

The Secretary of the NMED will consider the proposed plan and comments received by the public in his decision to approve or notify Suertudo Development, LLC of the proposal's deficiency.

Persons interested in reviewing the Stage 2 Abatement Plan proposal and/or obtaining additional information, may do so by contacting the Department's Ground Water Quality Bureau office in Albuquerque (505 222-9522). A copy of the plan is available on the NMED web page at https://www.env.nm.gov/gwb/NMED-GWQB-PublicNotice.htm.

The Secretary of the NMED will accept written statements or comments regarding the proposed Stage 2 Abatement Plan, and requests for a public meeting or hearing that include the reasons why a meeting or hearing should be held until November 1, 2019. Written statements, comments and/or request for notification of administrative completeness must be submitted to:

Justin Ball, Project Manager
Ground Water Quality Bureau
New Mexico Environment Department
121 Tijeras Avenue, NE
Albuquerque, NM 87102-3400
Justin.Ball@state.nm.us

NOTICE FOR NEWSPAPER AD

This is to inform you that Suertudo Development, LLC, has submitted a Stage 2 Abatement Plan (S2AP) for the Former McCatharn Dairy, located at 6363 State Highway 14, Albuquerque, New Mexico. The Stage 2 Abatement Plan has been prepared pursuant to the New Mexico Water Quality Control Commission (NMWQCC) requirements for the treatment of ground water containing nitrate, chloride, and total dissolved solids in excess of the NMWQCC standards.

The submitted Stage 2 Abatement Plan proposal consists of: 1) institutional control in the form of an Office of the State Engineer order to prohibit new wells from being installed in the Abatement Plan Area, 2) pumping contaminated groundwater with irrigation reuse for crop production, and 3) long term monitoring.

The Secretary of the NMED will consider the proposed plan and comments received by the public in his decision to approve or notify Suertudo Development, LLC of the proposal's deficiency.

Persons interested in reviewing the Stage 2 Abatement Plan proposal and/or obtaining additional information, may do so by contacting the Department's Ground Water Quality Bureau office in Albuquerque (505 222-9522). A copy of the plan is available on the NMED web page at https://www.env.nm.gov/gwb/NMED-GWQB-PublicNotice.htm.

The Secretary of the NMED will accept written statements or comments regarding the proposed Stage 2 Abatement Plan, and requests for a public meeting or hearing that include the reasons why a meeting or hearing should be held until November 1, 2019. Written statements, comments and/or request for notification of administrative completeness must be submitted to:

Justin Ball, Project Manager
Ground Water Quality Bureau
New Mexico Environment Department
121 Tijeras Avenue, NE
Albuquerque, NM 87102-3400
Justin.Ball@state.nm.us

PUBLIC NOTICE PSA FOR RADIO

THIS IS TO INFORM YOU THAT SUERTUDO DEVELOPMENT, LLC, HAS SUBMITTED A STAGE 2 ABATEMENT PLAN (S2AP) FOR THE FORMER MCCATHARN DAIRY, LOCATED AT 6363 STATE HIGHWAY 14, ALBUQUERQUE, NEW MEXICO. THE STAGE 2 ABATEMENT PLAN HAS BEEN PREPARED PURSUANT TO THE NEW MEXICO WATER QUALITY CONTROL COMMISSION (NMWQCC) REQUIREMENTS FOR THE TREATMENT OF GROUND WATER CONTAINING NITRATE, CHLORIDE, AND TOTAL DISSOLVED SOLIDS IN EXCESS OF THE NMWQCC STANDARDS. THE SUBMITTED STAGE 2 ABATEMENT PLAN PROPOSAL CONSISTS OF: 1) INSTITUTIONAL CONTROL IN THE FORM OF AN OFFICE OF THE STATE ENGINEER ORDER TO PROHIBIT NEW WELLS FROM BEING INSTALLED IN THE ABATEMENT PLAN AREA, 2) PUMPING CONTAMINATED GROUNDWATER WITH IRRIGATION REUSE FOR CROP PRODUCTION, AND 3) LONG TERM MONITORING.

QUESTIONS, COMMENTS OR REQUEST FOR PUBLIC HEARING ABOUT THE ABATEMENT PLAN MUST BE SUBMITTED IN WRITING WITHIN 60 DAYS AFTER THE DEPARTMENT MAKES A DETERMINATION THAT THE PROPOSAL IS ADMINISTRATIVELY COMPLETE. WRITTEN STATEMENTS, COMMENTS AND/OR REQUEST FOR NOTIFICATION OF ADMINISTRATIVE COMPLETENESS MUST BE SUBMITTED TO:

NEW MEXICO ENVIRONMENT DEPARTMENT
GROUND WATER QUALITY BUREAU
NEW MEXICO ENVIRONMENT DEPARTMENT
121 TIJERAS AVENUE, NE
ALBUQUERQUE, NM 87102-3400

COMMENTS CAN ALSO BE MADE BY CALLING JUSTIN BALL AT 505-222-9522.

New Mexico Pueblos

Tribal Entities as recognized by the U.S. Department of Interior, Federal Register Vol. 79, No 19, 4748-4753 (Updated January 6, 2016)

Pueblo of Acoma
Governor Kurt Riley
P.O. Box 309
Acoma, NM 87034
Phone: (505) 552-6604
Fax: (505) 552-7204
1st Lt. Gov. Raymond J. Concho, Jr.
2nd Lt. Gov. Robert T. Garcia

Pueblo of Cochiti
Governor Nicholas Garcia
P.O. Box 70
Cochiti Pueblo, NM 87072
Phone: (505) 465-2244
Fax: (505) 465-1135
Lt. Gov. Peter Herrera

Pueblo of Isleta
Governor E. Paul Torres
P.O. Box 1270
Isleta Pueblo, NM 87022
Phone: (505) 869-3111
Fax: (505) 869-7596
1st Lt. Gov. Antonio Chewiwi
2nd Lt. Gov. Isadore Abeita

Pueblo of Jemez
Governor David Yepa
P.O. Box 100
Jemez Pueblo, NM 87024
Phone: (575) 834-7359
Fax: (575) 834-7331
1st Lt. Gov. Hilario Armijo
2nd Lt. Gov. Ward Yeppa

Pueblo of Laguna
Governor Virgil A. Siow
P.O. Box 194
Laguna Pueblo, NM 87026
Phone: (505) 552-6654
Fax: (505) 552-6941
1st Lt. Gov. David A. Martinez
2nd Lt. Gov. Paul D. Pino

Pueblo of Nambe
Governor Phillip A. Perez
Route 1, Box 117-BB
Santa Fe, NM 87506
Phone: (505) 455-2036
Fax: (505) 455-2038
Lt. Gov. Arnold J. Garcia

Ohkay Owingeh
Governor Earl Salazar
P.O. Box 1099
San Juan Pueblo, NM 87566
Phone: (505) 852-4400
Fax: (505) 852-4820
1st Lt. Gov. Benny Lujan
2nd Lt. Gov. Mike Montoya

Pueblo of Picuris
Governor Gary Pyne
P.O. Box 127
Penasco, NM 87553
Phone: (575) 587-2519
Fax: (575) 587-1071
Lt. Gov. Craig Quanchello

Pueblo of Pojoaque
Governor Joseph M. Talachy
Pueblo of Pojoaque
78 Cities of Gold Road
Santa Fe, NM 87506
Phone: (505) 455-4500
Fax: (505) 455-0174
Lt. Gov. Jenelle Roybal

Pueblo of San Felipe
Governor Michael T. Sandoval
P.O. Box 4339
San Felipe Pueblo, NM 87001
Phone: (505) 867-3381
Fax: (505) 867-3383
Lt. Gov. James Candelaria

Pueblo of San Ildefonso
Governor James R. Mountain
02 Tunyo Po
Santa Fe, NM 87506
Phone: (505) 455-2273
Fax: (505) 455-7351
Lt. Gov. M. Wayne Martinez

Pueblo of Santa Ana
Governor Myron Armijo
2 Dove Road
Santa Ana Pueblo, NM 87004
Phone: (505) 867-3301
Fax: (505) 867-3395
Lt. Gov. Ulysses Leon

Pueblo of Santo Domingo
Governor Daniel Coriz
P.O. Box 99
Santo Domingo Pueblo, NM 87052
Phone: (505) 465-2214
Fax: (505) 465-2688 / 2215
Lt. Gov. Kenneth Aguilar

Pueblo of Tesuque
Governor Fredrick Vigil
Route 42, Box 360-T
Santa Fe, NM 87506
Phone: (505) 955-7732
Fax: (505) 982-2331
Lt. Gov. James Duran

Pueblo of Zuni
Governor Val Panteah, Sr.
P.O. Box 339
Zuni, NM 87327
Phone: (505) 782-7000
Fax: (505) 782-7202
Lt. Gov. Birdena Sanchez

Pueblo of Sandia
Governor Isaac Lujan
481 Sandia Loop
Bernalillo, NM 87004
Phone: (505) 867-3317
Fax: (505) 867-9235
Lt. Gov. Stuart Paisano

Pueblo of Santa Clara
Governor J. Michael Chavarria
P.O. Box 580
Espanola, NM 87532
Phone: (505) 753-7330
Fax: (505) 753-8988
Lt. Gov. James Naranjo

Pueblo of Taos
Governor Benito M. Sandoval
P.O. Box 1846
Taos, NM 87571
Phone: (575) 758-9593
Fax: (575) 758-4604
Lt. Gov. Harold V. Cordova

Pueblo of Zia
Governor Jerome Lucero
135 Capitol Square Dr.
Zia Pueblo, NM 87053
Phone: (505) 867-3304
Fax: (505) 867-3308
Lt. Gov. Carl B. Schildt

Navajo Nation

Tribal Entities as recognized by the U.S. Department of Interior, Federal Register Vol. 79, No 19, 4748-4753 (Updated January 6, 2016)

Navajo Nation
President Russell Begaye
P.O. Box 7440
Window Rock, AZ 86515
Phone: (928) 871-7000
Fax: (928) 871-4025
Vice President Jonathan Nez

Navajo Nation Council
LoRenzo Bates, Pro-tem Speaker of the Navajo Nation Council, Office of the Speaker
P.O. Box 3390
Window Rock, AZ 86515
Phone: (928) 871-7160
Fax: (928) 871-7255

Apache Tribes and Nations

Tribal Entities as recognized by the U.S. Department of Interior, Federal Register Vol. 79, No 19, 4748-4753 (Updated January 6, 2016)

Jicarilla Apache Nation
President Ty Vicenti
P.O. Box 507
Dulce, NM 87528
Phone: (575) 759-3242
Fax: (575) 759-3005
Vice President Ernest Petago

Mescalero Apache Tribe
President Danny Breuninger, Sr.
P.O. Box 227
Mescalero, NM 88340
Phone: (575) 464-4494
Fax: (575) 464-9191
Vice President Gabe Aguilar