CIBOLA COUNTY, NEW MEXICO

MOUNT TAYLOR URANIUM MINE/RIO GRANDE RESOURCES CORP.
URANIUM ION EXCHANGE &
MOLYBDENUM AND SELENIUM ADSORPTION FACILITY

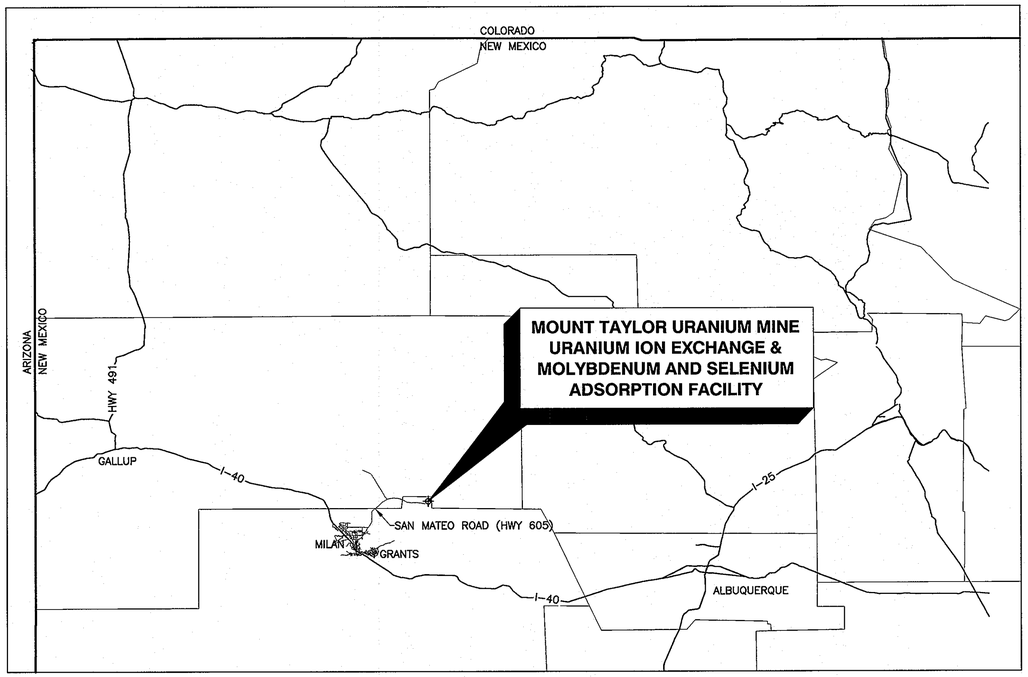

LOCATION MAP
NOT TO SCALE

N

SHEET INDEX

SHEET NUMBER	SHEET TITLE
1	COVER SHEET
2	SYMBOLS & LEGEND (SHEET 1 OF 2)
3	SYMBOLS & LEGEND (SHEET 2 OF 2)
4	URANIUM ION EXCHANGE EQUIPMENT LAYOUT PLAN
5	URANIUM ION EXCHANGE FOUNDATION CONTAINMENT PLAN
6	URANIUM ION EXCHANGE MISCELLANEOUS DETAILS
7	URANIUM ION EXCHANGE PROCESS FLOW DIAGRAM
8	MOLYBDENUM AND SELENIUM PROCESS FLOW DIAGRAM
9	URANIUM P&ID-MINE WATER WET WELL
10	URANIUM P&ID-ION EXCHANGE COLUMNS (TRAINS 1 & 2)
11	URANIUM P&ID-RESIN STORAGE AND TRANSFER
12	MOLYBDENUM AND SELENIUM P&ID
13	MOLYBDENUM AND SELENIUM BUILDING LAYOUT

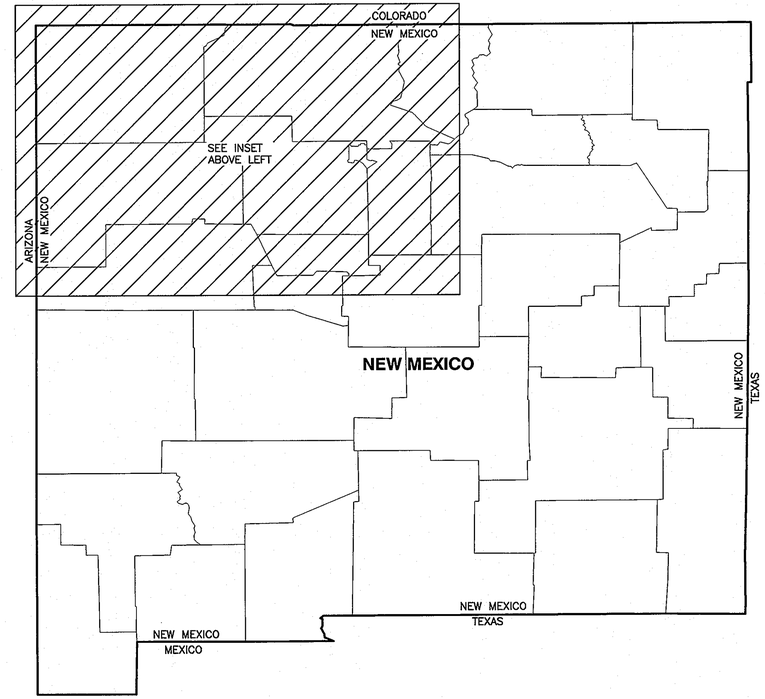

LNV
engineers | architects | contractors
801 NAVIGATION, SUITE 300
CORPUS CHRISTI, TEXAS 78408
TBPE FIRM NO. F-366
PH. (361) 883-1984
FAX (361) 883-1986
WWW.LNVINC.COM

DAN S. LEYENDECKER, P.E. NO. 18550
NEW MEXICO 18550 PROFESSIONAL ENGINEER
3/19/15

*** REVISION BLOCK ***

DATE	NO.	DESCRIPTION	BY
3.13.15	1	ADD Mo/Se REMOVAL TO SYSTEM	DWH

DRAWN BY: DWH
CHECKED BY: WLB
APPROVED BY: DSL
SCALE: SHOWN
MARCH 2015

MT. TAYLOR URANIUM MINE/RIO GRANDE RESOURCES CORP., NEW MEXICO
URANIUM ION EXCHANGE & MOLYBDENUM AND SELENIUM ADSORPTION FACILITY

COVER SHEET

LNV
engineers | architects | contractors
801 NAVIGATION, SUITE 300
CORPUS CHRISTI, TEXAS 78408
TBPE FIRM NO. F-366
PH. (361) 883-1984
FAX (361) 883-1986
WWW.LNVINC.COM

1 / 13
JOB NO: 150092
TAB NO: COVER SHEET
SHEET NO: 1 OF 13

U:\Rio Grande Resources\150092 Mt Taylor Moly Sel Removal\000\Drawings\Plans\Civil\1 COVER SHEET.dwg
Thursday March 19, 2015, 1:42pm

FUNCTION SYMBOLS:

	CONTROL ROOM CONSOLES	FIELD MOUNTED	AUXILLIARY CONTROL PANEL NORMALLY ACCESSIBLE TO OPERATOR
DISCRETE INSTRUMENTS			
DCS			
COMPUTER FUNCTION			
PLC			

LINE SYMBOLS:

- FLOW LINE
- CONTROL LINE (ELECTRICAL)
- HARDWIRE
- DATA COMMUNICATIONS RS485, RS422 BETWEEN PLC AND DCS
- PID CONTROL LOOP
- AIR SUPPLY
- INTERLOCK
- SVH — SET VALUE HIGH (DCS) FOR VFD.
- SVL — SET VALUE LOW (DCS) FOR VFD.
- MV — MANIPULATED VARIABLE FOR VFD.
- PV — PROCESS VARIABLE FOR VFD.

LINE CONTINUATION ARROWS:

- TO/FROM ADJACENT DRAWING
- DWG. NUMBER — TO/FROM NON-ADJACENT DRAWING

ABBREVIATIONS

FRP	FIBERGLASS REINFORCED STEEL
RLS	RUBBER LINED STEEL
SS	STAINLESS STEEL
STEEL	CARBON STEEL
LPB	(PVC) POLYVINYL CHLORIDE
RO	RESIN IN
RI	RESIN OUT
MW	MINE WATER
RTW	RESIN TRANSFER WATER

MECHANICAL SYMBOLS:

- PUMP
- REDUCER
- FLANGE JOINT
- CAMLOCK FITTING
- FILTER
- FLEXIBLE JOINT
- VENTS
- AGITATOR
- MANHOLE
- PULSE DAMPENER
- RECEIVER
- RADIOACTIVE SOURCE
- EDUCTOR
- FLEXIBLE HOSE
- SONIC LEVEL SENSOR
- VERTICAL TURBINE PUMP

MISCELLANEOUS SYMBOLS:

- MAG METER
- MOTOR ACTUATED VALVE WITH MANUAL HANDWHEEL
- BAG FILTER

VALVE SYMBOLS:

- VALVE – GENERAL
- VALVE – NORMALLY CLOSED
- BALL VALVE
- BUTTERFLY VALVE
- DIAPHRAGM VALVE MANUALLY OPERATED
- PRESSURE RELIEF VALVE SPRING OPERATED
- PRESSURE REDUCING VALVE OPERATED BY DOWNSTREAM PRESSURE — FLOW DIRECTION
- BACK PRESSURE VALVE OPERATED BY UPSTREAM PRESSURE — FLOW DIRECTION
- CHECK VALVE
- KNIFE GATE VALVE
- HAND VALVE MANUALLY OPERATED
- CONTROL VALVE – FLOW MODULATING 4–20mA /PNEUMATIC OPERATED MANUAL OVER-RIDE VXXX
- STRAINER

VALVE NOMENCLATURE

VXXX
- VALVE ID
- TRAIN (IF APPLICABLE)
- PROCESS
- VALVE

PROCESS
- 0 MINE WATER
- 1 ION EXCHANGE
- 2 RESIN OUT
- 3 RESIN IN
- 4 RESIN TRANSFER WATER

DAN S. LEVENDECKER, P.E. NO. 18550 — NEW MEXICO — PROFESSIONAL ENGINEER — 3/19/15

NO.	DATE	DESCRIPTION	BY
		*** REVISION BLOCK ***	
1	3.13.15	ADD Mo/Se REMOVAL TO SYSTEM	DWH

DRAWN BY: DWH
CHECKED BY: WLB
APPROVED BY: DSL
SCALE: SHOWN
MARCH 2015

MT. TAYLOR URANIUM MINE/RIO GRANDE RESOURCES CORP., NEW MEXICO
URANIUM ION EXCHANGE & MOLYBDENUM AND SELENIUM ADSORPTION FACILITY

SYMBOLS & LEGEND (SHEET 1 OF 2)

LNV engineers | architects | contractors
801 NAVIGATION, SUITE 300
CORPUS CHRISTI, TEXAS 78408
TDPE FIRM NO. F-366
PH. (361) 883-1984
FAX (361) 883-0986
WWW.LNVINC.COM

2 / 13

JOB NO: 150092
TAB NO: SYMBOLS
SHEET NO: 2 OF 13

U:\Rio Grande Resources\150092 Mt Taylor Moly Set Removal\000\Drawings\Plans\Civil\3 SYMBOLS & LEGEND (SHEET 2 OF 2).dwg
Thursday March 19, 2015, 1:42pm

P&ID SYMBOLS; FIELD INSTRUMENTS

XX = EQUIPMENT ID

MW	MINE WATER
IX-(1-14)	ION EXCHANGE COLUMN (1-14)
RI	RESIN IN
RO	RESIN OUT
T-1	OVERFLOW TANK
T-2A	RESIN TRANSFER WATER STORAGE TANK
T-2B	RESIN TRANSFER WATER STORAGE TANK
T-3A	LOADED RESIN STORAGE TANK
T-3B	LOADED RESIN STORAGE TANK
SP-1	SUMP PUMP

LI XX	LEVEL INDICATOR
FI XX	FLOW INDICATOR
LT XX	LEVEL TRANSMITTER
FT XX	FLOW TRANSMITTER
LV XX	LEVEL VALVE
FCV XX	FLOW CONTROL VALVE
LIT XX	LEVEL INDICATOR TRANSMITTER
FIT XX	FLOW INDICATOR TRANSMITTER
LS XX	LEVEL SWITCH
LSH XX	LEVEL SWITCH HIGH
LSL XX	LEVEL SWITCH LOW
LSHL XX	LEVEL SWITCH HIGH LOW
LCV XX	LEVEL CONTROL VALVE
FE XX	FLOW SENSOR ELEMENT
LE XX	LEVEL SENSOR ELEMENT
VFD XX	VARIABLE FREQUENCY DRIVE

LAHH XX	LEVEL ALARM HIGH HIGH by DCS
LAH XX	LEVEL ALARM HIGH by DCS
LAL XX	LEVEL ALARM LOW by DCS
LALL XX	LEVEL ALARM LOW LOW by DCS
FAL XX	FLOW ALARM LOW by DCS
FAH XX	FLOW ALARM HIGH by DCS
LIC XX	LEVEL INDICATOR CONTROL by DCS
FIC XX	FLOW INDICATOR CONTROL by DCS
FR XX	FLOW RECORDER by DCS

3/19/15

DAN S. LEVENDECKER, P.E. NO. 18550

*** REVISION BLOCK ***

NO.	DATE	DESCRIPTION	BY
1	3.13.15	ADD Mo/Se REMOVAL TO SYSTEM	DWH
2			
3			

DRAWN BY: DWH
CHECKED BY: WLB
APPROVED BY: DSL
SCALE: SHOWN
MARCH 2015

MT. TAYLOR URANIUM MINE/RIO GRANDE RESOURCES CORP., NEW MEXICO
URANIUM ION EXCHANGE & MOLYBDENUM AND SELENIUM ADSORPTION FACILITY

SYMBOLS & LEGEND
(SHEET 2 OF 2)

LNV engineers | architects | contractors
801 NAVIGATION, SUITE 300
CORPUS CHRISTI, TEXAS 78408
TBPE FIRM NO: F-495
PH: (361) 883-1894
FAX: (361) 883-1896
WWW.LNVINC.COM

3 / 13

JOB NO:	150092
TAB NO.	LEGEND
SHEET NO:	3 OF 13

U:\Rio Grande Resources\150092 Mt Taylor Moly Sel Removal\000\Drawings\Plans\Civil\3 SYMBOLS & LEGEND (SHEET 2 OF 2).dwg
Thursday March 19, 2015, 1:42pm

EQUIPMENT SUMMARY				
TAG	DESCRIPTION	SIZE	CAPACITY	
IX-(1-8)	EXISTING IX COLUMNS WITH MODIFICATIONS	12'ø x 12'H	10,000 GAL	
IX-(9-14)	PROPOSED IX COLUMNS	12'ø x 12'H	10,000 GAL	
T-1	OVERFLOW TANK	26'ø x 24'H	95,000 GAL	
T-2A	RESIN TRANSFER WATER STORAGE TANK	12'ø x 20'H	16,000 GAL	
T-2B	RESIN TRANSFER WATER STORAGE TANK	12'ø x 20'H	16,000 GAL	
T-3A	LOADED RESIN STORAGE TANK	8'ø x 20'H	7,500 GAL	1,000 CF
T-3B	LOADED RESIN STORAGE TANK	8'ø x 20'H	7,500 GAL	1,000 CF
SP-1	SUMP AND GRATE	6'ø x 5' DEEP	1,000 GAL	
P-2	RESIN TRANSFER WATER PUMP	TBD		
F-(1-3)	FILTER	TBD		
RT	RESIN TANKER			1,500 CF

LEGEND

- EXIST ELEVATED PLATFORM
- EXIST 24" MANIFOLD (UPPER LEVEL)
- EXIST 24" MANIFOLD (LOWER LEVEL)
- PIPE — EXIST PIPE
- D — EXIST REDUCER
- EXIST VALVE

PLANT NORTH

N

SCALE
1"=5' (FULL SIZE)
1"=10' (HALF SIZE)

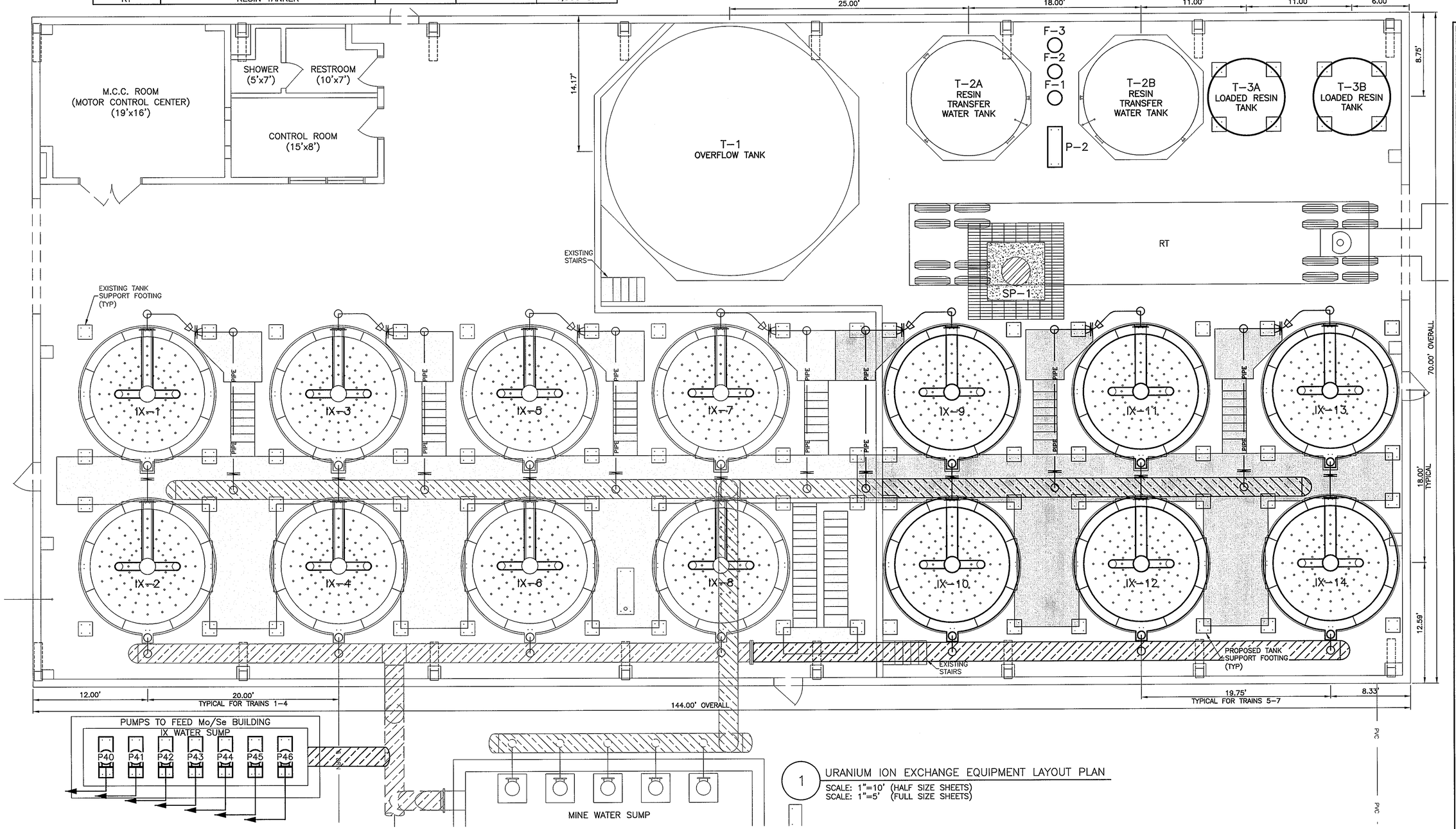

1 URANIUM ION EXCHANGE EQUIPMENT LAYOUT PLAN
SCALE: 1"=10' (HALF SIZE SHEETS)
SCALE: 1"=5' (FULL SIZE SHEETS)

DAN S. LEVENDECKER, P.E. NO. 18550
NEW MEXICO
18550
PROFESSIONAL ENGINEER
3/19/15

*** REVISION BLOCK ***

DATE	NO.	DESCRIPTION	BY
3.13.15	1	ADD Mo/Se REMOVAL TO SYSTEM	DWH
	2		
	3		

DRAWN BY: DWH
CHECKED BY: WLB
APPROVED BY: DSL
SCALE: SHOWN
MARCH 2015

MT. TAYLOR URANIUM MINE/RIO GRANDE RESOURCES CORP., NEW MEXICO
URANIUM ION EXCHANGE & MOLYBDENUM AND SELENIUM ADSORPTION FACILITY

URANIUM ION EXCHANGE EQUIPMENT LAYOUT PLAN

LNV
engineers | architects | contractors
801 NAVIGATION, SUITE 300
CORPUS CHRISTI, TEXAS 78408
TBPE FIRM NO. F-366
PH. (361) 883-1984
FAX (361) 883-1986
WWW.LNVINC.COM

4 / 13

JOB NO: 150092
TAB NO. PROP. EQUIP.
SHEET NO: 4 OF 13

U:\Rio Grande Resources\150092 Mt Taylor Moly Sel Removal\000\Drawings\Plans\Civil\4 URANIUM ION EXCHANGE EQUIPMENT LAYOUT PLAN.dwg
Thursday March 19, 2015, 1:42pm

LEGEND

	EXISTING TRENCH DRAIN
FF	INDICATES FINISH FLOOR ELEVATION
FL	INDICATES FLOWLINE ELEVATION
EL	INDICATES ELEVATION
TW	INDICATES TOP OF WALL ELEVATION
TOC	INDICATES TOP OF CONCRETE ELEVATION
TG	INDICATES TOP OF GRATE ELEVATION

PLANT NORTH

N

SCALE
1"=5' (FULL SIZE)
1"=10' (HALF SIZE)

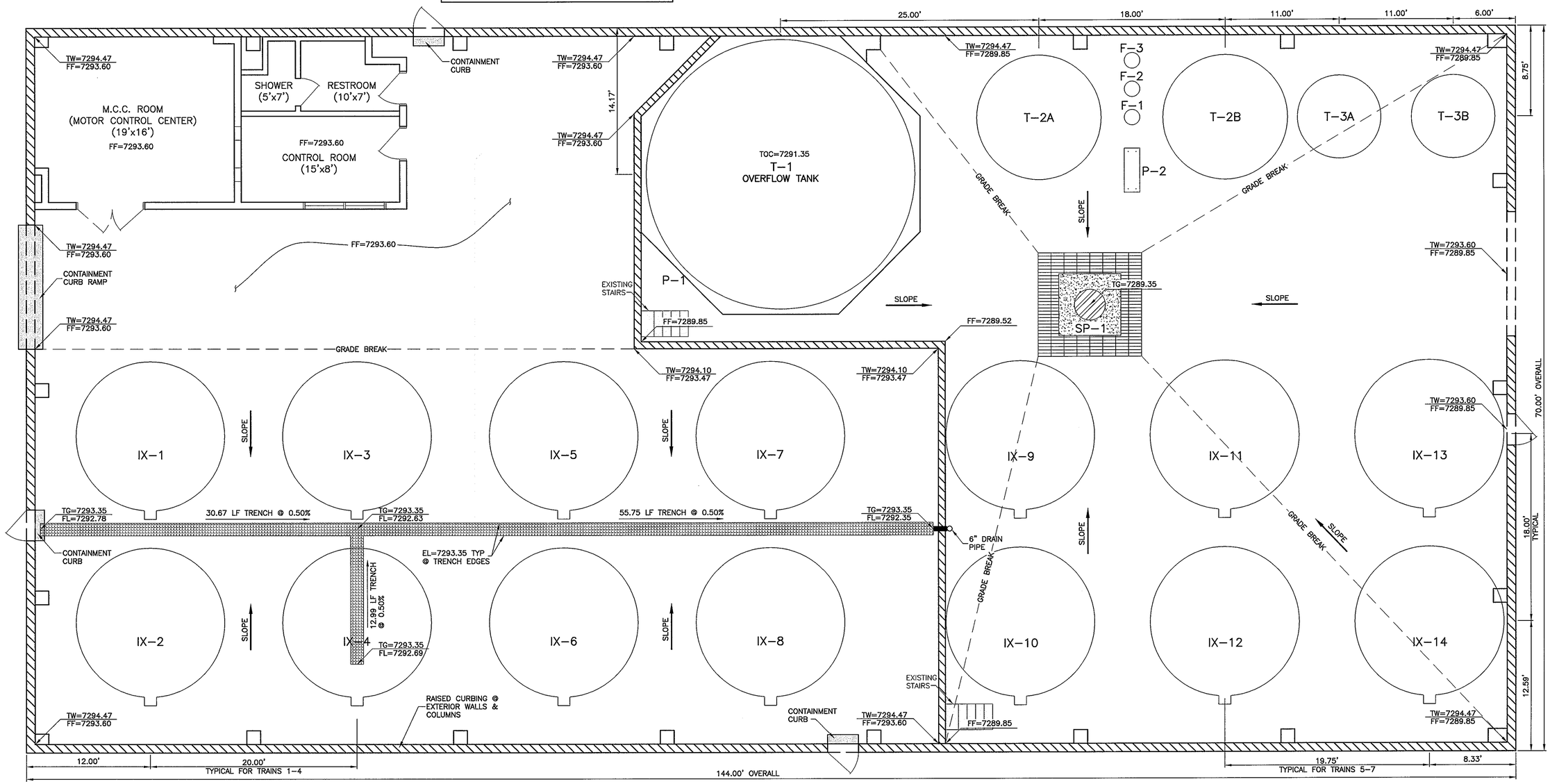

2 URANIUM ION EXCHANGE FOUNDATION CONTAINMENT PLAN

SCALE: 1"=10' (HALF SIZE SHEETS)
SCALE: 1"=5' (FULL SIZE SHEETS)

*** REVISION BLOCK ***

NO.	DATE	DESCRIPTION	BY
1	3.13.15	ADD Mo/Se REMOVAL TO SYSTEM	DWH

DAN S. LEYENDECKER, P.E. NO. 16550

DRAWN BY: DWH
CHECKED BY: WLB
APPROVED BY: DSL
SCALE: SHOWN
MARCH 2015

MT. TAYLOR URANIUM MINE/RIO GRANDE RESOURCES CORP., NEW MEXICO
URANIUM ION EXCHANGE & MOLYBDENUM AND SELENIUM ADSORPTION FACILITY

URANIUM ION EXCHANGE FOUNDATION CONTAINMENT PLAN

LNV engineers | architects | contractors
861 NAVIGATION, SUITE 300
CORPUS CHRISTI, TEXAS 78405
TBPE FIRM NO: F-406
PH: (361) 883-1894
FAX: (361) 883-1896
WWW.LNVINC.COM

5 / 13

JOB NO: 150092
TAB NO. PROP. EQUIP.
SHEET NO: 5 OF 13

U:\Rio Grande Resources\150092 Mt Taylor Moly Sell Removal\000\Drawings\Plans\Civil\5 URANIUM ION EXCHANGE FOUNDATION CONTAINMENT PLAN.dwg
Thursday March 19, 2015, 1:43pm

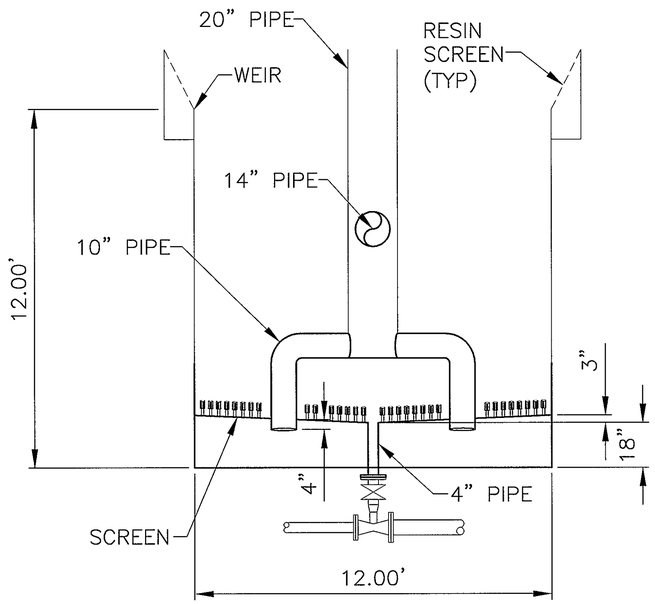

SECTION

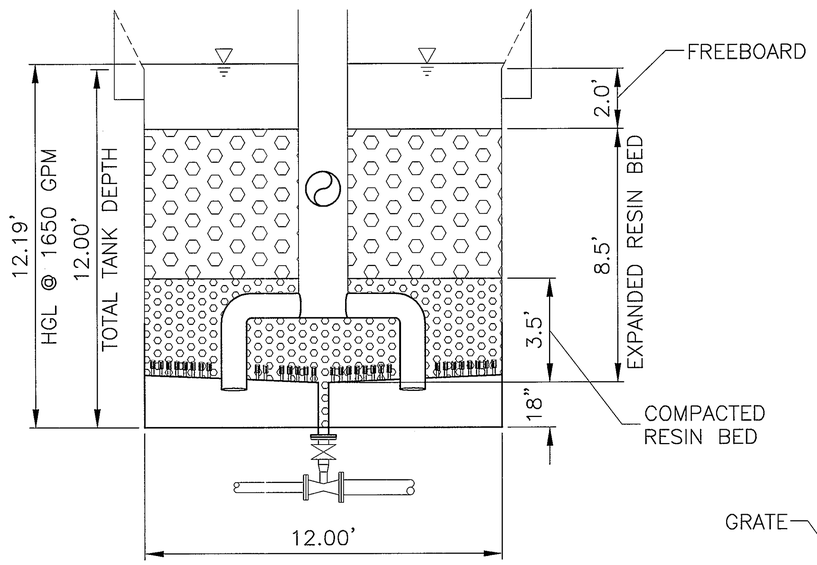

4 RESIN & HYDRAULIC PROFILE
SCALE: 1"=5' (HALF SIZE)

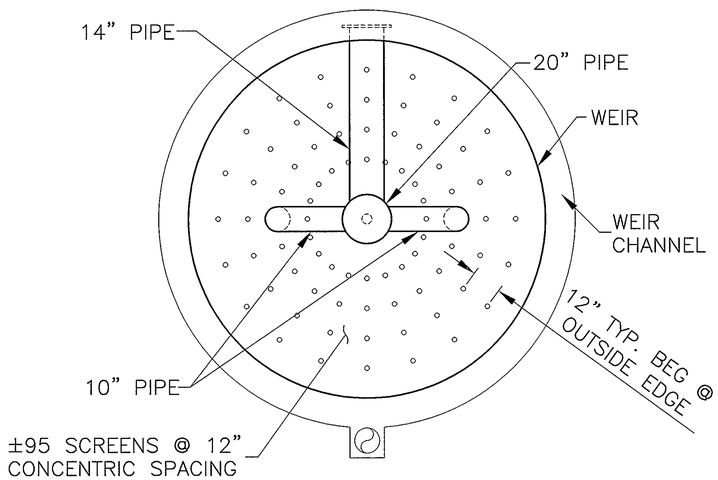

PLAN

3 IX COLUMN
SCALE: 1"=5' (HALF SIZE)

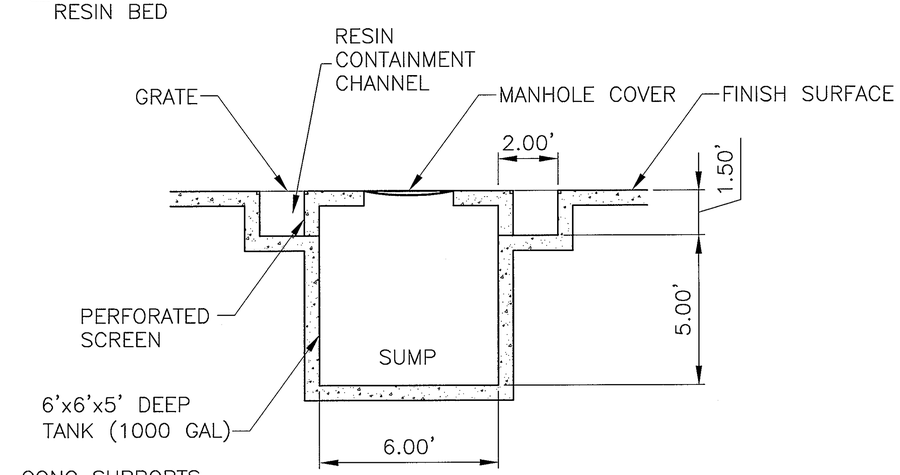

SECTION

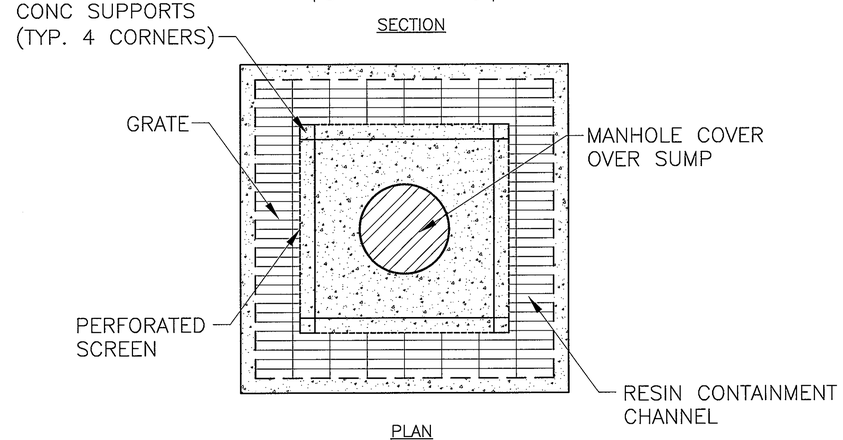

PLAN

5 SUMP DETAIL
SCALE: 1"=5' (HALF SIZE)

DAN S. LEYENDECKER NEW MEXICO 18550 PROFESSIONAL ENGINEER 3/19/15

DAN S. LEYENDECKER, P.E. NO. 18550

*** REVISION BLOCK ***

DATE	NO.	DESCRIPTION	BY
3.13.15	1	ADD Mo/Se REMOVAL TO SYSTEM	DWH
	2		
	3		

DRAWN BY: DWH
CHECKED BY: WLB
APPROVED BY: DSL
SCALE: SHOWN
MARCH 2015

MT. TAYLOR URANIUM MINE/RIO GRANDE RESOURCES CORP., NEW MEXICO
URANIUM ION EXCHANGE & MOLYBDENUM AND SELENIUM ADSORPTION FACILITY

URANIUM ION EXCHANGE MISCELLANEOUS DETAILS

LNV engineers | architects | contractors
801 NAVIGATION, SUITE 300
CORPUS CHRISTI, TEXAS 78408
TBPE FIRM NO. F-366
PH. (361) 883-1984
FAX (361) 883-1986
WWW.LNVINC.COM

6 / 13
JOB NO: 150092
TAB NO: PROP. EQUIP.
SHEET NO: 6 OF 13

U:\Rio Grande Resources\150092 Mt Taylor Moly Sel Removal\000\Drawings\Plans\Civil\6 URANIUM ION EXCHANGE MISCELLANEOUS DETAILS.dwg
Thursday March 19, 2015, 1:43pm

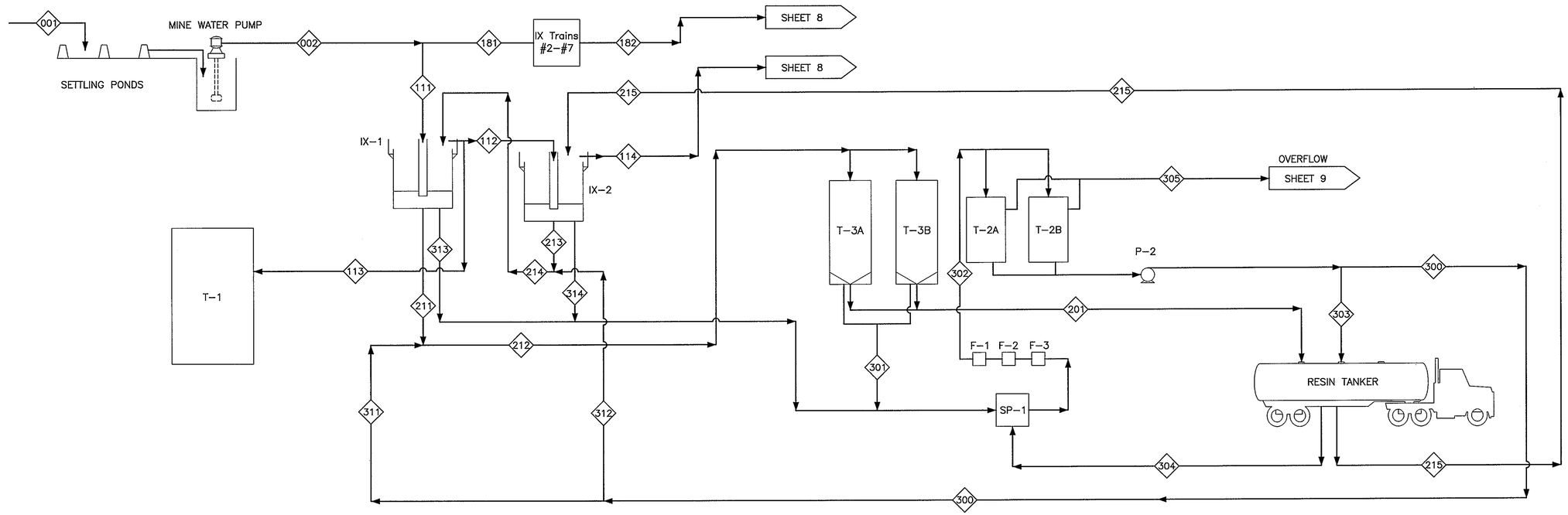

XXX
- STREAM ID
- TRAIN # — 8=TRAINS 2–7 COMBINED; 0=ALL TRAINS COMBINED
- PROCESS

PROCESS
- 0 MINE WATER
- 1 ION EXCHANGE
- 2 RESIN TRANSFER
- 3 RESIN TRANSFER WATER

NOTES:

1. LEAD AND TAIL IX COLUMNS OF TRAIN NUMBER (1) OF SEVEN (7) SHOWN
2. NEW RESIN TRANSFER LINE 4" @ 5 FPS THEREFORE WATER FLOW @ 200 GPM.

6 URANIUM ION EXCHANGE PROCESS FLOW DIAGRAM
NOT TO SCALE

URANIUM ION EXCHANGE FLOW AND MASS BALANCE

PROCESS			ION EXCHANGE								RESIN TRANSFER						RESIN TRANSFER WATER									
STREAM NO.			001	002	111	112	113	114	181	182	201	211	212	213	214	215	300	301	302	303	304	305	311	312	313	314
DESCRIPTION			RAW MINE WATER	SETTLED MINE WATER	U_3O_8 TRAIN #1 LEAD COLUMN FEED	U_3O_8 TRAIN #1 LEAD COLUMN DISCHARGE / TAIL COLUMN FEED	OVERFLOW	U_3O_8 TRAIN #1 TAIL COLUMN TREATED WATER	U_3O_8 IX TRAINS #2 - #7 FEED	U_3O_8 IX TRAINS #2 - #7 TREATED WATER	LOADED RESIN TO RESIN TANKER	U_3O_8 TRAIN #1 LEAD COLUMN LOADED RESIN	LOADED RESIN AND RTW	U_3O_8 TRAIN #1 TAIL COLUMN PARTIALLY LOADED RESIN	PARTIALLY LOADED RESIN AND RTW	STRIPPED RESIN	RTW TO EDUCTOR OF LEAD OR TAIL IX COLUMN	LOADED RESIN STORAGE TANK RTW RETURN	FILTERED WATER BACK TO RTW STORAGE TANK	RESIN TRANSFER WATER TO RESIN TANKER	RESIN TANKER WATER TO SUMP	RESIN TRANSFER WATER STORAGE TANK OVERFLOW	RTW TO EDUCTOR OF LEAD COLUMN	RTW TO EDUCTOR OF TAIL COLUMN	U_3O_8 TRAIN #1 LEAD COLUMN RTW RETURN	U_3O_8 TRAIN #1 TAIL COLUMN RTW RETURN
ION EXCHANGE	Q_{IX}	(gpm)	10,000	10,000	1,429	1,429	-	1,429	8,571	8,571	-	-	-	-	-	-	-	-	-	-	-	-	-	-	-	-
	Q_{IX}	(ft^3/min)	1,337	1,337	191	191	-	191	1,146	1,146	-	-	-	-	-	-	-	-	-	-	-	-	-	-	-	-
	SOLIDS	(mg/L)	1,000	100	100	100	-	100	100	100	-	-	-	-	-	-	-	-	-	-	-	-	-	-	-	-
	SOLIDS	(Tons/h)	2.5	0.25	0.04	0.04	-	0.04	0.21	0.21	-	-	-	-	-	-	-	-	-	-	-	-	-	-	-	-
TOTALS	TRANSFER TIME	(min)	-	-	-	-	-	-	-	-	120	120	120	120	120	120	120	120	120	120	120	-	120	120	120	120
	SP.GR.	LIQUOR	1	1	1	1	-	1	1	1	1	1	1	1	1	1	1	1	1	1	1	-	1	1	1	1
	U_3O_8	(mg/l)	0.1	0.1	0.1	0.020	-	0.017	0.1	0.017	0.3	961	0.3	35	0	-	-	-	-	-	-	-	-	-	-	-
	U_3O_8	(lbs/day)	12	12	1.7	0.34	-	0.29	10.3	1.8	-	-	-	-	-	-	-	-	-	-	-	-	-	-	-	-
	U_3O_8	(lbs/ft^3)	0	0	0	0	-	0	0	0	0	0.06	0	0.002	0	-	-	-	-	-	-	-	-	-	-	-
	Mo	(mg/L)	0.530	0.530	0.530	0.530	0.530	0.530	0.530	0.530	-	-	-	-	-	-	-	-	-	-	-	-	-	-	-	-
	Se	(mg/L)	0.090	0.090	0.090	0.090	0.090	0.090	0.090	0.090	-	-	-	-	-	-	-	-	-	-	-	-	-	-	-	-
	Q_{TOTAL}	(gpm)	10,000	10,000	1,429	1,429	-	1,429	8,571	8,571	225	25	225	25	225	225	200	200	200	200	200	-	200	200	200	200
	Water	(Tons/h)	2,502	2,502	357	357	-	357	2,145	2,145	56	6	56	6	56	56	50	50	50	50	50	-	50	50	50	50
	TOTAL	(Tons/h)	2,505	2,503	358	358	-	358	2,145	2,145	56	6	56	6	56	56	50	50	50	50	50	-	50	50	50	50
RESIN TRANSFER	Q_{RESIN}	(gpm)	-	-	-	-	-	-	-	-	25	25	25	25	25	25	-	-	-	-	-	-	-	-	-	-
	Q_{RESIN}	(ft^3/min)	-	-	-	-	-	-	-	-	3.3	3.3	3.3	3.3	3.3	3.3	-	-	-	-	-	-	-	-	-	-
RESIN TRANSFER WATER	V_{RESIN}	(ft^3)	-	-	-	-	-	-	-	-	400	400	400	400	400	400	-	-	-	-	-	-	-	-	-	-
	Q_{RTW}	(gpm)	-	-	-	-	-	-	-	-	200	-	200	-	200	200	200.0	200.0	200.0	200	200	-	200.0	200.0	200.0	200.0
	Q_{RTW}	(ft^3/min)	-	-	-	-	-	-	-	-	27	-	27	-	27	27	27	27	27	27	27	-	27	27	27	27

NO.	DATE	DESCRIPTION	BY
1	3.13.15	ADD Mo/Se REMOVAL TO SYSTEM	DWH

*** REVISION BLOCK ***

DAN S. LEYENDECKER, P.E. NO. 18550

DRAWN BY: DWH
CHECKED BY: WLB
APPROVED BY: DSL
SCALE: SHOWN
MARCH 2015

MT. TAYLOR URANIUM MINE/RIO GRANDE RESOURCES CORP., NEW MEXICO
URANIUM ION EXCHANGE & MOLYBDENUM AND SELENIUM ADSORPTION FACILITY

URANIUM ION EXCHANGE PROCESS FLOW DIAGRAM

LNV engineers | architects | contractors
801 NAVIGATION, SUITE 300
CORPUS CHRISTI, TEXAS 78408
TBPE FIRM NO. F-308
PH. (361) 883-1984
FAX (361) 883-1986
WWW.LNVINC.COM

U:\Rio Grande Resources\150092 Mt Taylor Moly Set Removal\000\Drawings\Plans\Civil\7 URANIUM ION EXCHANGE PROCESS FLOW DIAGRAM.dwg
Thursday March 19, 2015, 1:43pm

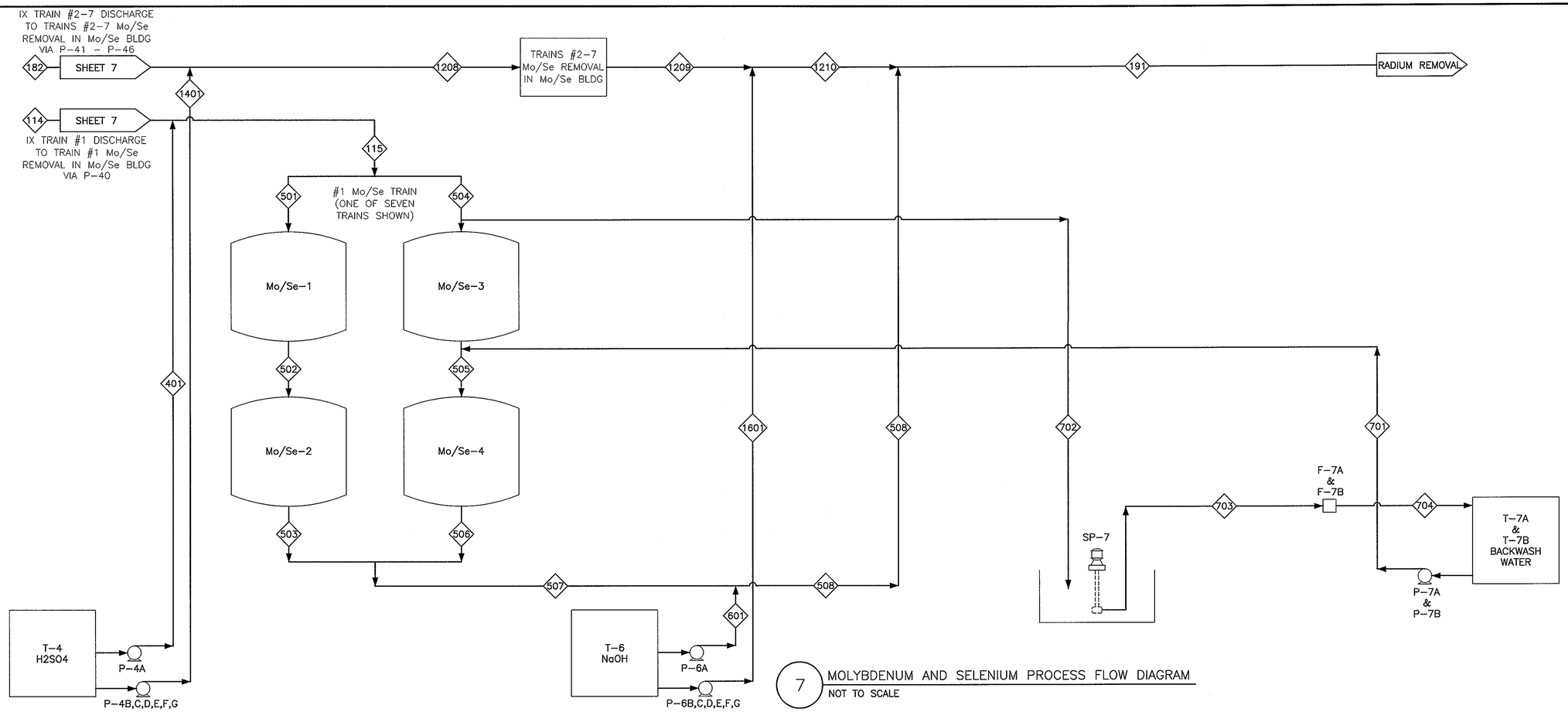

7 MOLYBDENUM AND SELENIUM PROCESS FLOW DIAGRAM
NOT TO SCALE

FLOW AND MASS BALANCE

PROCESS			MOLYBDENUM/SELENIUM ADSORBENT MEDIA															PH ADJUSTMENT						MEDIA BACKWASH			
STREAM NO.			114	115	501	502	503	504	505	506	507	508	182	1208	1209	1210	191	401	1401		601	1601		701	702	703	704
DESCRIPTION			U_3O_8 TRAIN #1 TAIL COLUMN TREATED WATER	U_3O_8 TRAIN #1 TAIL COLUMN TREATED WATER PH ADJUSTED / FEED TO MO/SE REMOVAL	HALF FLOW OF FEED FROM U_3O_8 TRAIN #1 TO MO/SE TRAIN #1	MO/SE TRAIN #1 LEAD COLUMN DISCHARGE / TAIL COLUMN FEED	MO/SE TRAIN #1 TAIL COLUMN TREATED WATER	HALF FLOW OF FEED FROM U_3O_8 TRAIN #1 TO MO/SE TRAIN #2	MO/SE TRAIN #2 LEAD COLUMN DISCHARGE / TAIL COLUMN FEED	MO/SE TRAIN #2 TAIL COLUMN TREATED WATER	MO/SE TRAINS #1-2 TREATED WATER COMBINED DISCHARGE	MO/SE TRAINS #1-2 TREATED WATER COMBINED DISCHARGE PH ADJUSTED WITH NAOH	U_3O_8 IX TRAINS #2-7 TREATED WATER	U_3O_8 TRAINS #2-7 TAIL COLUMN FEED PH ADJUSTED / FEED TO MO/SE REMOVAL	MO/SE TRAINS #3-14 TREATED WATER COMBINED DISCHARGE	MO/SE TRAINS #3-14 TREATED WATER COMBINED DISCHARGE PH ADJUSTED WITH NAOH	MO/SE TRAINS #1-14 TREATED WATER COMBINED DISCHARGE PH ADJUSTED WITH NAOH	H_2SO_4 ADDITION TO STREAM 114	ACID ADDITION TO 1209	TOTAL ACID ADDITION	CAUSTIC ADDITION TO 507	CAUSTIC ADDITION TO 1209	TOTAL CAUSTIC ADDITION	BACKWASH WATER TO MO/SE MEDIA COLUMN	BACKWASH WATER WITH SILT TO SUMP	SILT WATER TO FILTER	FILTERED WATER TO BACKWASH WATER TANK
SELENIUM/MOLYBDENUM ADSORBENT FEED	Q_{IX}	(gpm)	1,429	1,429	714	714	714	714	714	714	1,429	1,429	8,571	8,573	8,573	8,573	10,002	-	-	-	-	-	-	-	-	-	-
	Q_{IX}	(ft^3/min)	191	191	96	96	96	96	96	96	191	191	1,146	1,146	1,146	1,146	1,337	-	-	-	-	-	-	-	-	-	-
	SOLIDS	(mg/L)	100	100	100	100	100	100	100	100	100	100	100	100	100	100	100	-	-	-	-	-	-	-	-	-	-
	SOLIDS	(Tons/h)	0.036	0.036	0.018	0.018	0.018	0.018	0.018	0.018	0.036	0.036	0.215	0.215	0.215	0.215	0.250	-	-	-	-	-	-	-	-	-	-
TOTALS	SP.GR.	LIQUOR	1	1	1	1	1	1	1	1	1	1	1	1	1	1	1	-	-	-	-	-	-	-	-	-	-
	U_3O_8	(mg/L)	0.017	0.017	0.017	0.017	0.017	0.017	0.017	0.017	0.017	0.017	0.017	0.017	0.017	0.017	0.017	-	-	-	-	-	-	-	-	-	-
	Mo	(mg/l)	0.530	0.530	0.530	0.002	0.002	0.530	0.002	0.002	0.002	0.002	0.530	0.530	0.002	0.002	0.002	-	-	-	-	-	-	-	-	-	-
	Mo	(lbs/day)	9.10	9.10	4.55	0.02	0.02	4.55	0.02	0.02	0.04	0.04	54.59	54.58	0.23	0.23	0.23	-	-	-	-	-	-	-	-	-	-
	Mo	(lbs/ft^3)	0	0	0	0	0	0	0	0	0	0	0	0	0	0	0	-	-	-	-	-	-	-	-	-	-
	Se	(mg/l)	0.090	0.090	0.090	0.001	0.001	0.090	0.001	0.001	0.001	0.001	0.090	0.090	0.001	0.001	0.001	-	-	-	-	-	-	-	-	-	-
	Se	(lbs/day)	1.55	1.55	0.77	0.01	0.01	0.77	0.01	0.01	0.02	0.02	9.27	9.27	0.14	0.14	0.14	-	-	-	-	-	-	-	-	-	-
	Se	(lbs/ft^3)	0	0	0	0	0	0	0	0	0	0	0	0	0	0	0	-	-	-	-	-	-	-	-	-	-
	Q Total	(gpm)	1,429	1,429	714	714	714	714	714	714	1,429	358	8,571	8,571	8,573	8,573	10,002	-	-	-	-	-	-	300	300	300	300
	Water	(Tons/h)	357	357	179	179	179	179	179	179	358	89	2,145	2,145	2,145	2,145	2,503	-	-	-	-	-	-	-	-	-	-
	TOTAL	(Tons/h)	358	358	179	179	179	179	179	179	358	90	2,145	2,145	2,146	2,146	2,503	-	-	-	-	-	-	-	-	-	-
ACID ADDITION	Q_{acid}	(gpm)	-	-	-	-	-	-	-	-	-	-	-	-	-	-	-	0.27	1.60	1.86	-	-	-	-	-	-	-
	Q_{acid}	gpd			-	-	-	-	-	-	-	-	-	-	-	-	-	384	2,302	2,685	-	-	-	-	-	-	-
	Initial pH	pH		9.70	-	-	-	-	-	-	-	6.27	-	9.70	-	6.27	6.27	9.70	9.70	9.70	-	-	-	-	-	-	-
	Final pH	pH	9.70	6.27	6.27	6.27	6.27	6.27	6.27	6.27	6.27	7.00	9.70	6.27	6.27	7.00	7.00	6.27	6.27	6.27	-	-	-	-	-	-	-
CAUSTIC ADDITION	$Q_{caustic}$	(gpm)	-	-	-	-	-	-	-	-	-	-	-	-	-	-	-	-	-	-	0.0036	0.0213	0.0249	-	-	-	-
	$Q_{caustic}$	(ft^3/min)	-	-	-	-	-	-	-	-	-	-	-	-	-	-	-	-	-	-	0.0005	0.0029	0.0033	-	-	-	-
	Initial pH	pH	-	-	-	-	-	-	-	-	-	-	-	-	-	-	-	-	-	-	6.27	6.27	6.27	-	-	-	-
	Final pH	pH	-	-	-	-	-	-	-	-	-	-	-	-	-	-	-	-	-	-	7.00	7.00	7.00	-	-	-	-

NO.	DATE	DESCRIPTION	BY
1	3.13.15	ADD Mo/Se REMOVAL TO SYSTEM	DWH

*** REVISION BLOCK ***

DAN S. LEYDENDEKER, P.E. NO. 18550

DRAWN BY: DWH
CHECKED BY: WLB
APPROVED BY: DSL
SCALE: SHOWN
MARCH 2015

MT. TAYLOR URANIUM MINE/RIO GRANDE RESOURCES CORP., NEW MEXICO
URANIUM ION EXCHANGE & MOLYBDENUM AND SELENIUM ADSORPTION FACILITY

MOLYBDENUM AND SELENIUM PROCESS FLOW DIAGRAM

LNV engineers | architects | contractors
801 NAVIGATION, SUITE 300
CORPUS CHRISTI, TEXAS 78406
TBPE FIRM NO. F-306
PH: (361) 883-1984
FAX: (361) 883-1988
WWW.LNVINC.COM

U:\Rio Grande Resources\150092 Mt Taylor Moly Sel Removal\000\Drawings\Plans\Civil\8 MOLYBDENUM AND SELENIUM PROCESS FLOW DIAGRAM.dwg
Thursday March 19, 2015, 1:43pm

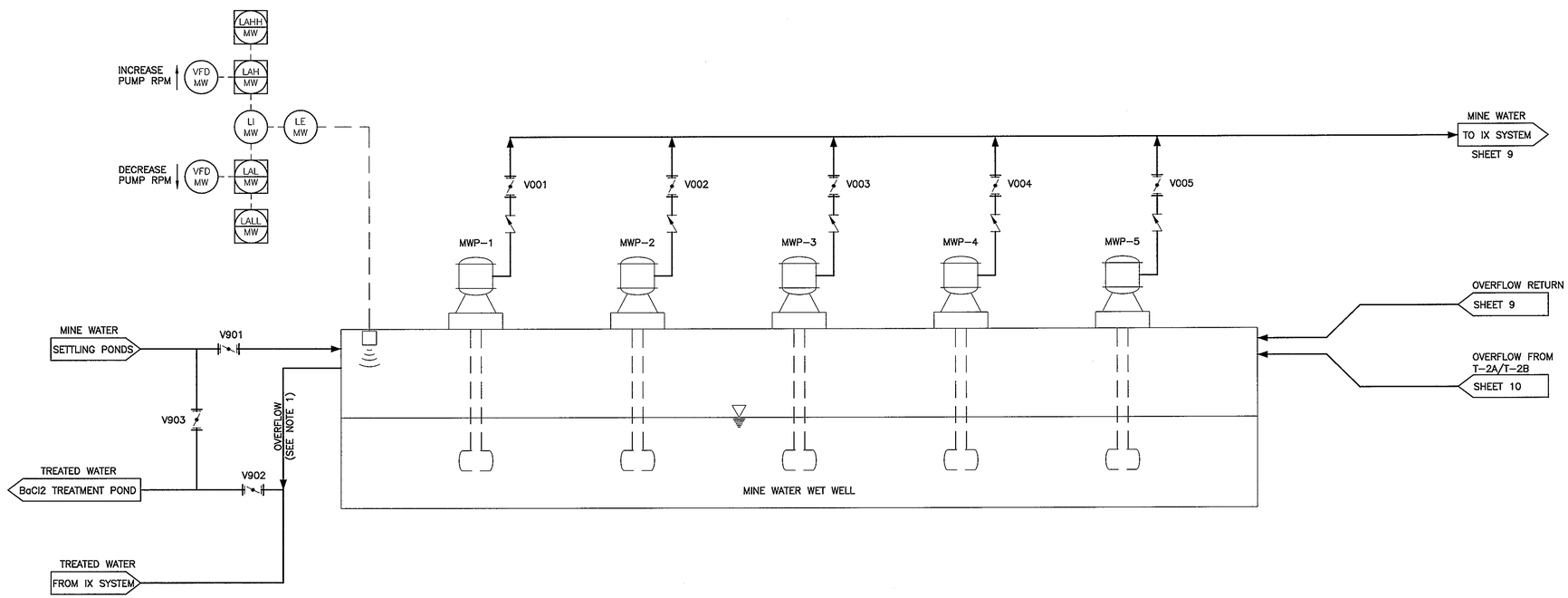

MWP-1 MWP-2 MWP-3 MWP-4 MWP-5

MINE WATER TRANSFER PUMPS

GPM 2,500 @ 40' OF HEAD
MOTOR HP: 40
MATERIAL: CAST STEEL, BRONZE TRIM

MINE WATER WET WELL

SIZE: 30'x6'x8'
CAPACITY: 10,800 GALLONS

NOTE:

1. OVERFLOW WILL ONLY BE USED DURING EXTREME HIGH WATER LEVELS RESULTING FROM ELECTRICAL, EQUIPMENT, OR INSTRUMENT FAILURE.

DAN S. LEYENDECKER
NEW MEXICO
18550
PROFESSIONAL ENGINEER
3/19/15

DAN S. LEYENDECKER, P.E. NO. 18550

*** REVISION BLOCK ***

DATE	NO.	DESCRIPTION	BY
3.13.15	1	ADD Mo/Se REMOVAL TO SYSTEM	DWH
	2		
	3		

DRAWN BY: DWH
CHECKED BY: WLB
APPROVED BY: DSL
SCALE: N.T.S.
MARCH 2015

MT. TAYLOR URANIUM MINE/RIO GRANDE RESOURCES CORP., NEW MEXICO
URANIUM ION EXCHANGE & MOLYBDENUM AND SELENIUM ADSORPTION FACILITY

URANIUM P&ID–MINE WATER WET WELL

LNV
engineers | architects | contractors
801 NAVIGATION, SUITE 300
CORPUS CHRISTI, TEXAS 78408
TBPE FIRM NO. F-366
PH. (361) 883-1984
FAX (361) 883-1986
WWW.LNVINC.COM

9 / 13

JOB NO: 150092
TAB NO: MW PID
SHEET NO: 9 OF 13

U:\Rio Grande Resources\150092 Mt Taylor Moly Sel Removal\000\Drawings\Plans\Civil\9 URANIUM P&ID-MINE WATER WET WELL.dwg
Thursday March 19, 2015, 1:43pm

** LEAD AND TAIL IX COLUMNS OF TRAINS ONE (1) AND TWO (2) OF SEVEN (7) SHOWN

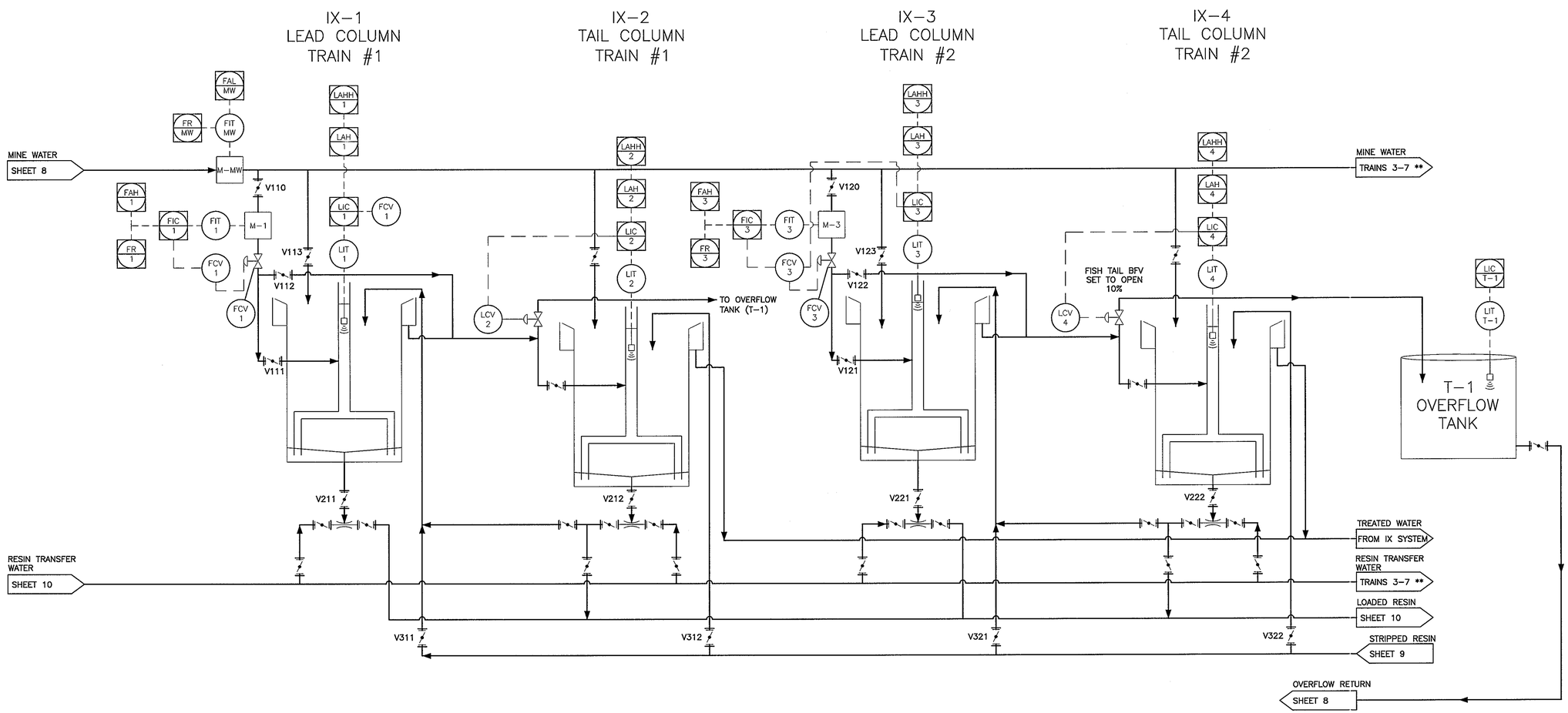

DAN S. LEYENDECKER, P.E. NO. 18550

*** REVISION BLOCK ***

DATE	NO.	DESCRIPTION	BY
3.13.15	1	ADD Mo/Se REMOVAL TO SYSTEM	DWH
	2		
	3		

DRAWN BY: DWH
CHECKED BY: WLB
APPROVED BY: DSL
SCALE: SHOWN
MARCH 2015

MT. TAYLOR URANIUM MINE/RIO GRANDE RESOURCES CORP., NEW MEXICO
URANIUM ION EXCHANGE & MOLYBDENUM AND SELENIUM ADSORPTION FACILITY

URANIUM P&ID-ION EXCHANGE COLUMNS (TRAINS 1 & 2)

LNV engineers | architects | contractors
801 NAVIGATION, SUITE 300
CORPUS CHRISTI, TEXAS 78408
TBPE FIRM NO. F-366
PH. (361) 883-1984
FAX (361) 883-1986
WWW.LNVINC.COM

10 / 13

JOB NO: 150092
TAB NO: IX PID
SHEET NO: 10 OF 13

U:\Rio Grande Resources\150092 Mt Taylor Moly Sel Removal\000\Drawings\Plans\Civil\10 URANIUM P&ID-ION EXCHANGE COLUMNS (TRAINS 1 & 2).dwg
Thursday March 19, 2015, 1:43pm

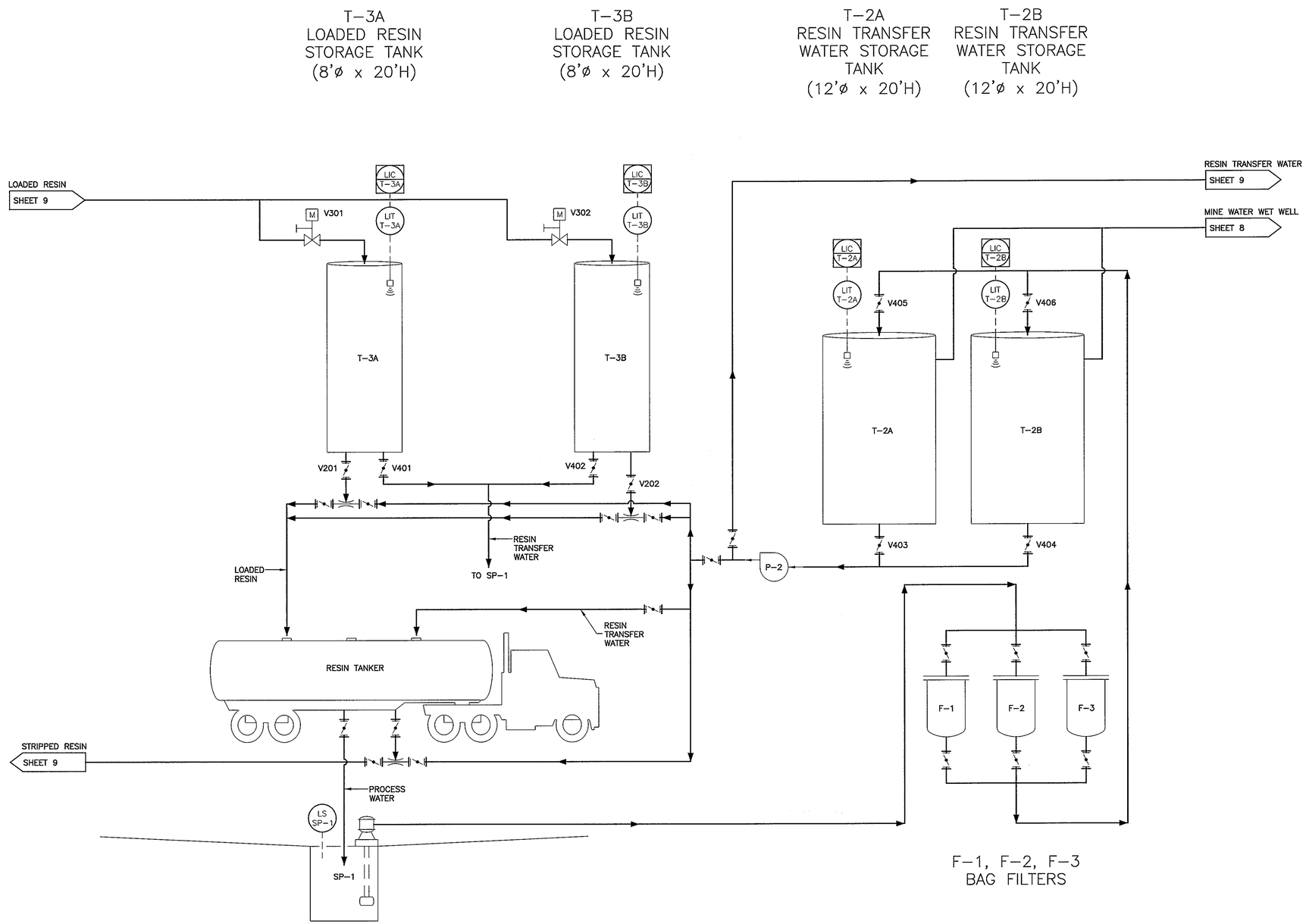

*** REVISION BLOCK ***			
NO.	DATE	DESCRIPTION	BY
1	3.13.15	ADD Mo/Se REMOVAL TO SYSTEM	DWH
2			
3			

DAN S. LEYENDECKER, P.E. NO. 18550

NEW MEXICO 18550 PROFESSIONAL ENGINEER DAN S. LEYENDECKER 3/19/15

DRAWN BY: DWH
CHECKED BY: WLB
APPROVED BY: DSL
SCALE: SHOWN
MARCH 2015

MT. TAYLOR URANIUM MINE/RIO GRANDE RESOURCES CORP., NEW MEXICO
URANIUM ION EXCHANGE & MOLYBDENUM AND SELENIUM ADSORPTION FACILITY

URANIUM P&ID-RESIN STORAGE AND TRANSFER

LNV engineers | architects | contractors
801 NAVIGATION, SUITE 300
CORPUS CHRISTI, TEXAS 78408
TBPE FIRM NO. F-295
PH. (361) 883-1984
FAX (361) 883-1988
WWW.LNVINC.COM

11	13
JOB NO:	150092
TAB NO.	RS PID
SHEET NO:	11 OF 13

I:\Rio Grande Resources\150092 Mt Taylor Moly Sel Removal\000\Drawings\Plans\Civil\11 URANIUM P&ID-RESIN STORAGE AND TRANSFER.dwg
Thursday March 19, 2015, 1:42pm

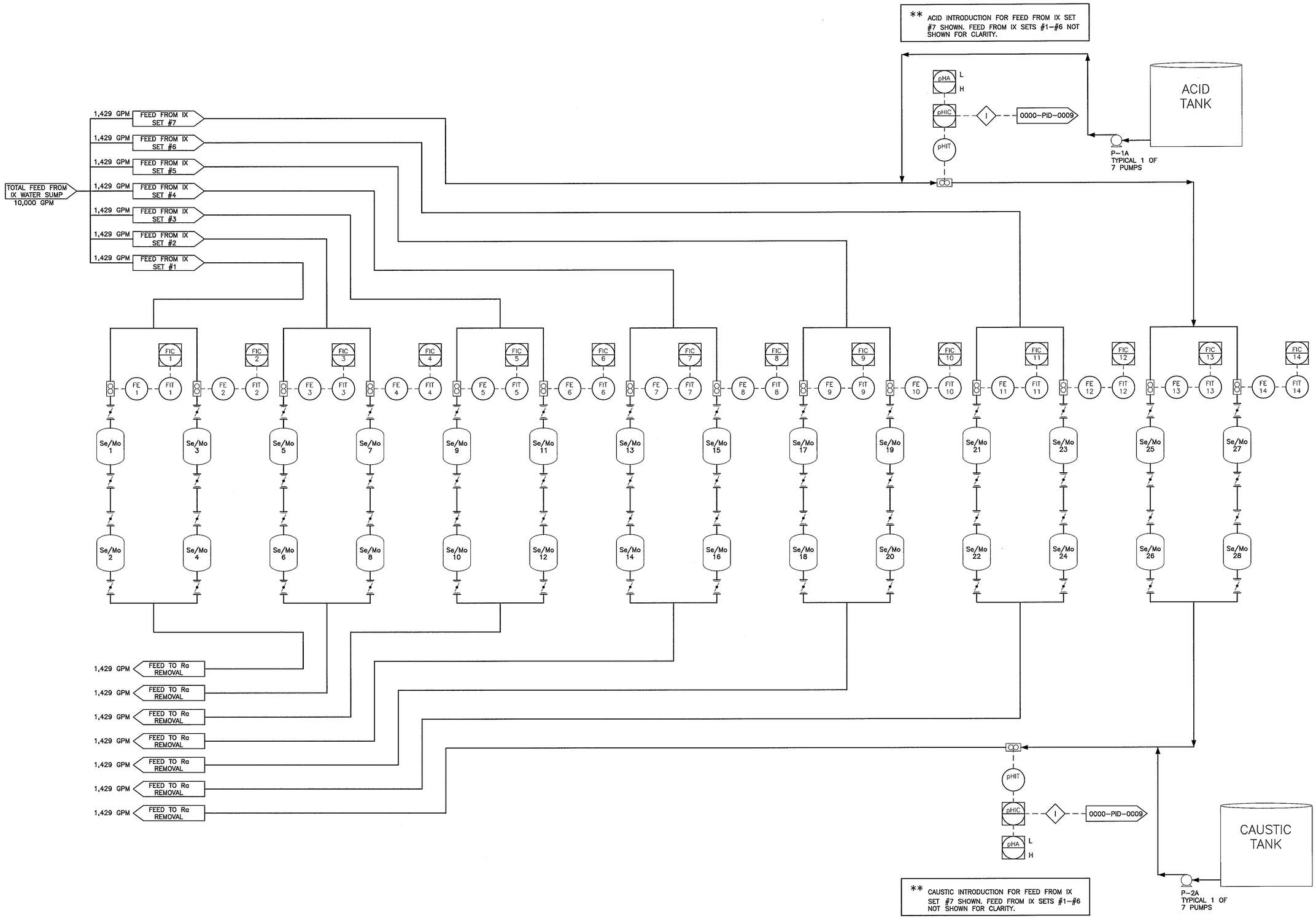

DAN S. LEVENDECKER
NEW MEXICO
18550
PROFESSIONAL ENGINEER
DAN S. LEVENDECKER, P.E. NO. 18550
3/13/15

*** REVISION BLOCK ***

DATE	NO.	DESCRIPTION	BY
3.13.15	1	ADD Mo/Se REMOVAL TO SYSTEM	DWH
	2		
	3		

DRAWN BY: DWH
CHECKED BY: WLB
APPROVED BY: DSL
SCALE: SHOWN
MARCH 2015

MT. TAYLOR URANIUM MINE/RIO GRANDE RESOURCES CORP., NEW MEXICO
URANIUM ION EXCHANGE & MOLYBDENUM AND SELENIUM ADSORPTION FACILITY

MOLYBDENUM AND SELENIUM P&ID

LNV engineers | architects | contractors
801 NAVIGATION, SUITE 300
CORPUS CHRISTI, TEXAS 78408
TBPE FIRM NO. F-309
PH. (361) 883-1984
FAX (361) 885-1986
WWW.LNVINC.COM

12 / 13

JOB NO.	150092
TAG NO.	IX PID
SHEET NO.	12 OF 13

U:\Rio Grande Resources\150092, Mt Taylor Moly Sel Removal\000\Drawings\Plans\Civil\12 MOLYBDENUM AND SELENIUM P&ID.dwg
Thursday March 19, 2015, 1:43pm

EQUIPMENT SUMMARY				
TAG	DESCRIPTION	SIZE	CAPACITY	
Se/Mo-(1-28)	PROPOSED Se/Mo COLUMNS	12.5'ø x 12'H	10,000 GAL	
T-7A	BACKWASH WATER STORAGE TANK	12'ø x 20'H	16,000 GAL	
T-7B	BACKWASH WATER STORAGE TANK	12'ø x 20'H	16,000 GAL	
SP-7	SUMP AND GRATE	6'ø x 5' DEEP	1,000 GAL	
P-7A & 7B	BACKWASH WATER PUMP	TBD		
F-7A & 7B	FILTER	TBD		

PLANT NORTH

N

SCALE
1"=10' (FULL SIZE)
1"=20' (HALF SIZE)

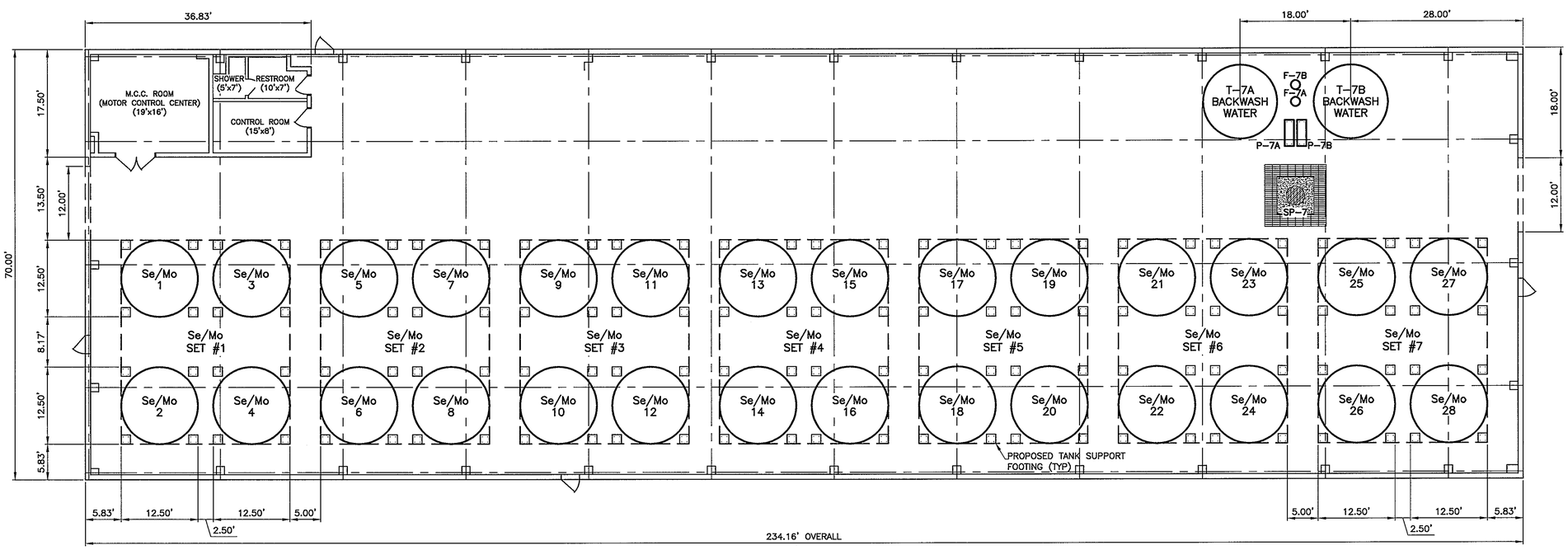

8 MOLYBDENUM AND SELENIUM BUILDING LAYOUT
SCALE: 1"=10' (HALF SIZE SHEETS)
SCALE: 1"=5' (FULL SIZE SHEETS)

DAN S. LEYENDECKER, P.E. NO. 18550
NEW MEXICO 18550 PROFESSIONAL ENGINEER
3/13/15

*** REVISION BLOCK ***

DATE	NO.	DESCRIPTION	BY
3.13.15	1	ADD Mo/Se REMOVAL TO SYSTEM	DWH
	2		
	3		

DRAWN BY: DWH
CHECKED BY: WLB
APPROVED BY: DSL
SCALE: SHOWN
MARCH 2015

MT. TAYLOR URANIUM MINE/RIO GRANDE RESOURCES CORP., NEW MEXICO
URANIUM ION EXCHANGE & MOLYBDENUM AND SELENIUM ADSORPTION FACILITY

MOLYBDENUM AND SELENIUM BUILDING LAYOUT

LNV engineers | architects | contractors
801 NAVIGATION, SUITE 300
CORPUS CHRISTI, TEXAS 78408
TBPE FIRM NO. F-366
PH. (361) 883-1984
FAX (361) 883-1986
WWW.LNVINC.COM

13 / 13

JOB NO: 150092
TAB NO: MOLY BLDG
SHEET NO: 13 OF 13

U:\Rio Grande Resources\150092 Mt Taylor Moly Set Removal\000\Drawings\Plans\Civil\13 MOLYBDENUM AND SELENIUM BUILDING LAYOUT.dwg
Thursday March 19, 2015, 1:43pm